SONY

DIGITAL VIDEOCASSETTE RECORDER

DSR-80/80P

DIGITAL VIDEOCASSETTE PLAYER

DSR-60/60P

SDI OUTPUT BOARD

DSBK-100
DSBK-100P

QSDI OUTPUT BOARD

DSBK-110
DSBK-110P

SDI INPUT/OUTPUT BOARD

DSBK-120
DSBK-120P

TIME CODE INPUT/OUTPUT BOARD

DSBK-130
DSBK-130P

SERVICE MANUAL

Vol. 2 (1st Edition/Revised 1)

DVCAM™

このマニュアルについて

本書は、デジタルカセットレコーダー DSR-80 およびデジタルカセットプレーヤー DSR-60 とそのオプション基板である SDI 出力ボード DSBK-100、QSDI 出力ボード DSBK-110、SDI 入出力ボード DSBK-120、タイムコード入出力ボード DSBK-130 のサービスマニュアル Vol. 2 です。本書では、ブロックダイヤグラム、マウント図、回路図、パーツリストを記載しています。

構　成

本書の構成を把握していただくために、全章の概略を以下に説明します。

第11章　BLOCK DIAGRAMS
各基板の機能や信号の流れを示すブロック図を掲載しています。

第12章　BOARD LAYOUTS
全プリント基板のパターンとシンボル図を掲載しています。

第13章　SCHEMATIC DIAGRAMS
全プリント基板の回路図を掲載しています。

第14章　SEMICONDUCTOR PIN ASSIGNMENTS
使用半導体の外形およびICについては概略の機能ブロックや、ピン名称を記載しています。

第15章　SPARE PARTS AND OPTIONAL FIXTURES
セットの全サービス部品を記載しています。

Introducing this manual

This manual is the Service Manual Vol. 2 of the digital videocassette recorder model DSR-80/80P and the digital videocassette player model DSR-60/60P and the option board SDI output board DSBK-100/100P, QSDI output board DSBK-110/110P, SDI input/output board DSBK-120/120P time code input/output board DSBK-130/130P. This manual contains block diagrams, board layouts, schematic diagrams and parts lists.

Contains

The sections covered in the manual are summarized below to give you a general understanding of the manual.

Section 11　BLOCK DIAGRAMS
Illustrates the block diagrams which show each board function and signal flow.

Section 12　BOARD LAYOUTS
Shows the board layouts of all circuit boards.

Section 13　SCHEMATIC DIAGRAMS
Shows the schematic diagrams of all circuit boards.

Section 14　SEMICONDUCTOR PIN ASSIGNMENTS
Shows the external dimensions of the semiconductors used, and describes outllines of the function blocks and pin names of the ICs.

Section 15　SPARE PARTS AND OPTIONAL FIXTURES
Describes the all service parts of the unit.

関連マニュアル

本機には、この「サービスマニュアル Vol. 2」の他に、下記のマニュアルが用意されています。

・取扱説明書（本機に付属しています）
DSR-60
部品番号：3-859-820-01
DSR-80
部品番号：3-860-358-02
本機を実際に運用および操作するのに必要な情報を記載しています。

・サービスマニュアル vol.1（本機に付属していません）
部品番号：9-977-695-13
本機の保守に関する情報と、部品交換および調整などのサービスに関する情報を記載しています。

Related manuals

In addition to this Service Manual Vol. 2, the following manuals are provided.

• **Operating Instructions (Supplied with equipment)**
DSR-60/60P
Parts number : 3-859-820-11 (English, for UC, CE)
3-859-820-21 (French, for UC, CE)
3-859-820-31 (German, for CE)
3-859-820-41 (Italian, for CE)
DSR-80/80P
Parts number : 3-860-358-13 (English, for UC, CE)
3-860-358-23 (French, for UC, CE)
3-860-358-33 (German, for CE)
3-860-358-43 (Italian, for CE)
Explains how to operate this equipment.

• **Service Manual Vol. 1 (Not supplied with equipment)**
Parts number : 9-977-696-13
Contains the maintenance information and servicing information necessary for parts replacement and adjustment.

目次
TABLE OF CONTENTS

Volume-1 (J)

1. 取扱説明
2. 設置
3. サービスインフォメーション
4. メンテナンスメニュー
5. 定期点検および保守
6. 機構部品交換
7. テープ走行調整
8. 電気調整のための一般情報
9. (Blank)
10. 電気調整

Volume-1 (UC, CE)

1. OPERATING INSTRUCTIONS
2. INSTALLATION
3. SERVICE OVERVIEW
4. MAINTENANCE MENU
5. PERIODIC INSPECTION AND MAINTENANCE
6. REPLACEMENT OF MECHANICAL PARTS
7. TAPE PATH ADJUSTMENT
8. ELECTRICAL ALIGNMENT OVERVIEW
9. (Blank)
10. ELECTRICAL ALIGNMENT

VOLUME-2

11. BLOCK DIAGRAMS

OVERALL BLOCK 11-1
DA-119 11-6
DV-15/15A 11-10
AUDIO (DV-17/17A) 11-12
DV-17/17A 11-13
IO-149/149A/149B/149C 11-14
PRE-34 11-18
RF BLOCK (PRE-39, RP-103) 11-19
RP-101 11-20
SDI-26/26A 11-22
SDI-27 11-23
SDI-28 11-25
SV-184/184A 11-26
SY-241/241B 11-28

12. BOARD LAYOUTS

CC-75 12-2
CC-76 12-2
CP-276A/276B 12-3
CP-281/281B/281C/281J 12-4
DA-119 12-6
DV-15/15A 12-8
DV-17/17A 12-10
FP-75 12-13
HP-73 12-13
IO-149/149A/149B/149C 12-14
KY-336/336B 12-16
MB-712 12-18
MB-713 12-20
MS-43 12-22
PRE-34 12-24
PRE-39 12-26
PTC-84 12-26
PTC-85 12-27
PTC-86 12-27
PTC-87 12-27
PTC-88 12-28
RM-159 12-28
RM-160 12-28
RP-101 12-25
RP-103 12-29
SDI-26/26A 12-30
SDI-27 12-33
SDI-28 12-34
SE-315 12-35
SE-361 12-35
SV-184 12-36
SY-241/241B 12-38
TC-90 12-40
TR-93 12-40

13. SCHEMATIC DIAGRAMS

CP-276A/276B 13-3
CP-281/281B/281C/281J 13-4
DA-119 13-6
DV-15/15A 13-22
DV-17/17A 13-44
IO-149/149A/149B/149C 13-62
KY-336/336B 13-80
MS-43 13-84
PRE-34 13-86
PRE-39 13-89
RP-101 13-90
RP-103 13-104
SDI-26/26A 13-109
SDI-27 13-120
SDI-28 13-124
SV-184 13-127
SY-241/241B 13-136
TC-90 13-145
MB-712 13-146
MB-713 13-158
FRAME 13-168

14. SEMICONDUCTOR PIN ASSIGNMENTS

15. SPARE PARTS AND OPTIONAL FIXTURES

15-1. NOTES ON SPARE PARTS 15-1
15-2. EXPLODED VIEWS 15-2
15-3. ELECTRICAL PARTS LIST (DSR-60/60P) 15-19
15-4. PACKING MATERIALS
& SUPPLIED ACCESSORIES (DSR-60/60P) 15-171
15-5. OPTIONAL FIXTURES (DSR-60/60P) 15-171
15-6. ELECTRICAL PARTS LIST (DSR-80/80P) 15-173
15-7. PACKING MATERIALS & SUPPLIED ACCESSORIES
(DSR-80/80P) 15-314
15-8. OPTIONAL FIXTURES (DSR-80/80P) 15-314

OVERALL (1/2)

DSR-60/60P

SECTION 11
BLOCK DIAGRAMS

OVERALL BLOCK (1/2)

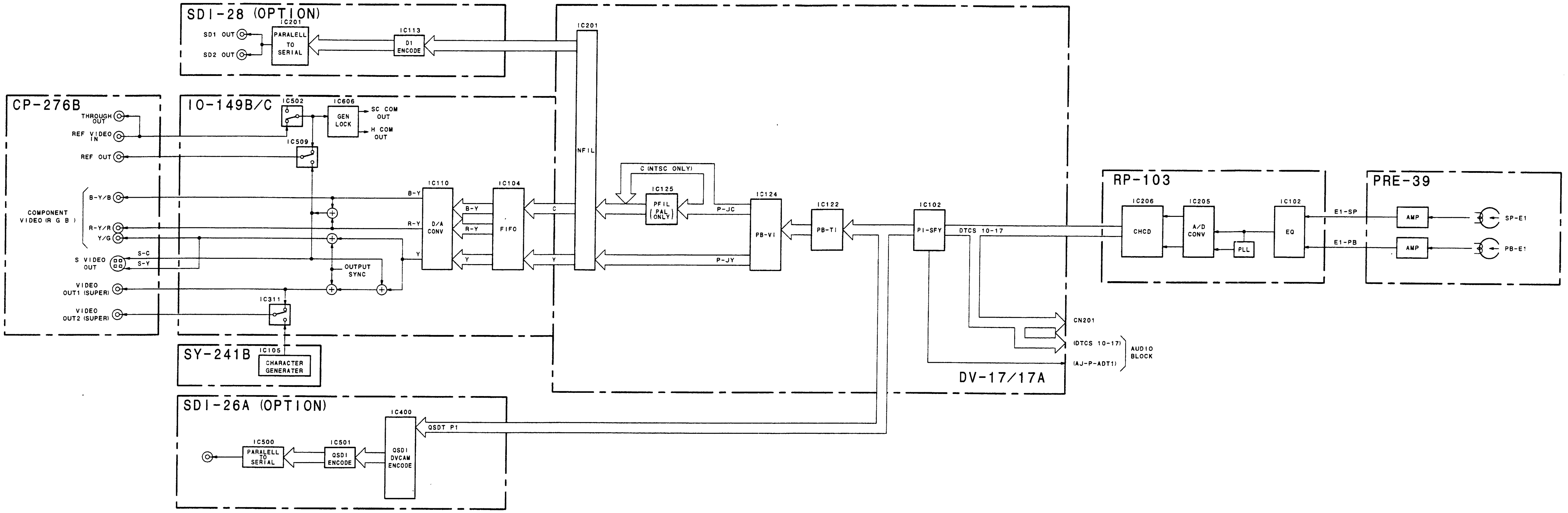

OVERALL BLOCK (1/2)
MODEL DSR-60/60P

11-1

NY-SP0754 / DRUCK 1

OVERALL (2/2)

DSR-60/60P

OVERALL BLOCK (2/2)

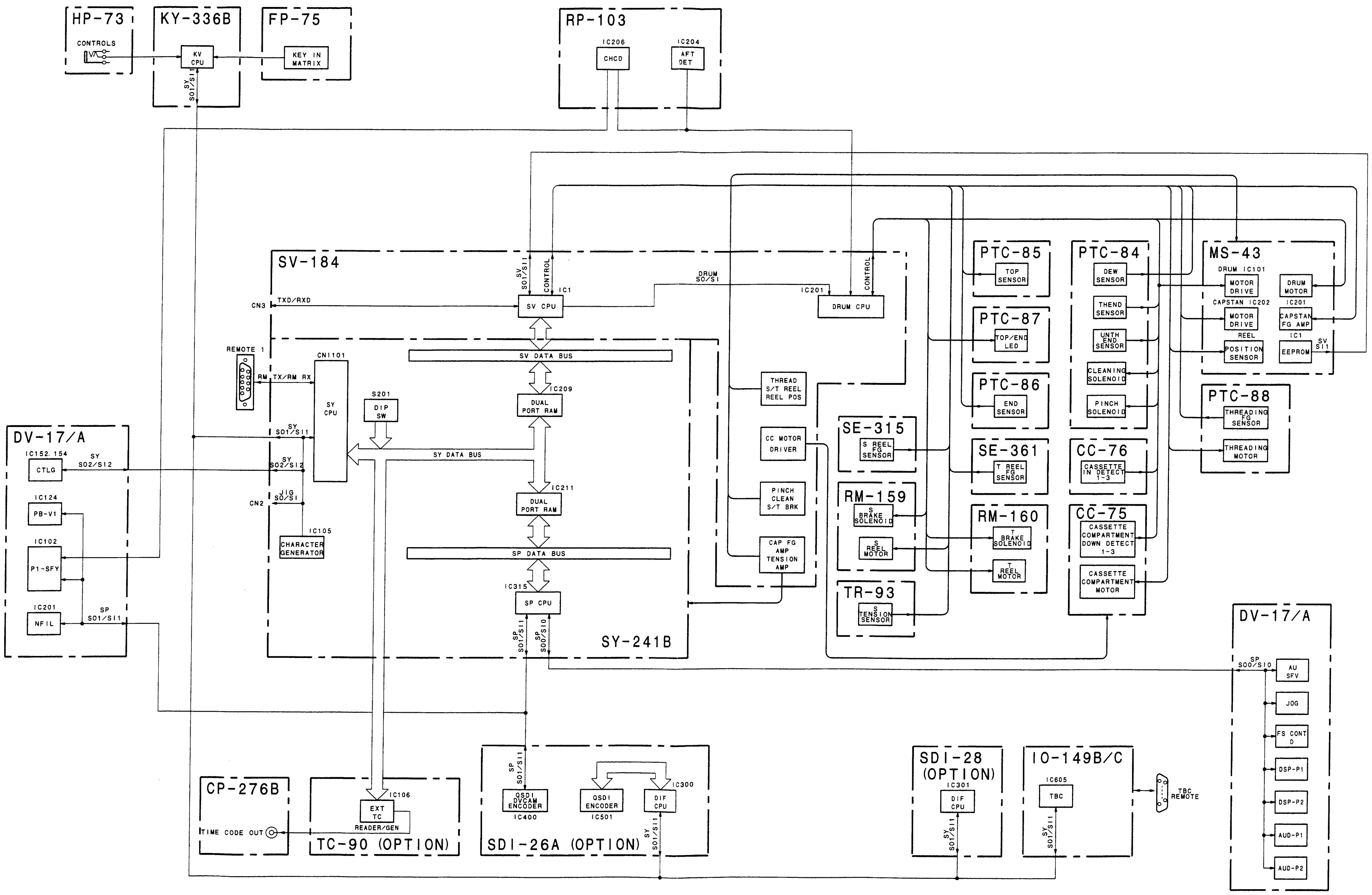

OVERALL BLOCK (2/2)
MODEL DSR-60/60P

11-2

OVERALL BLOCK (1/3)

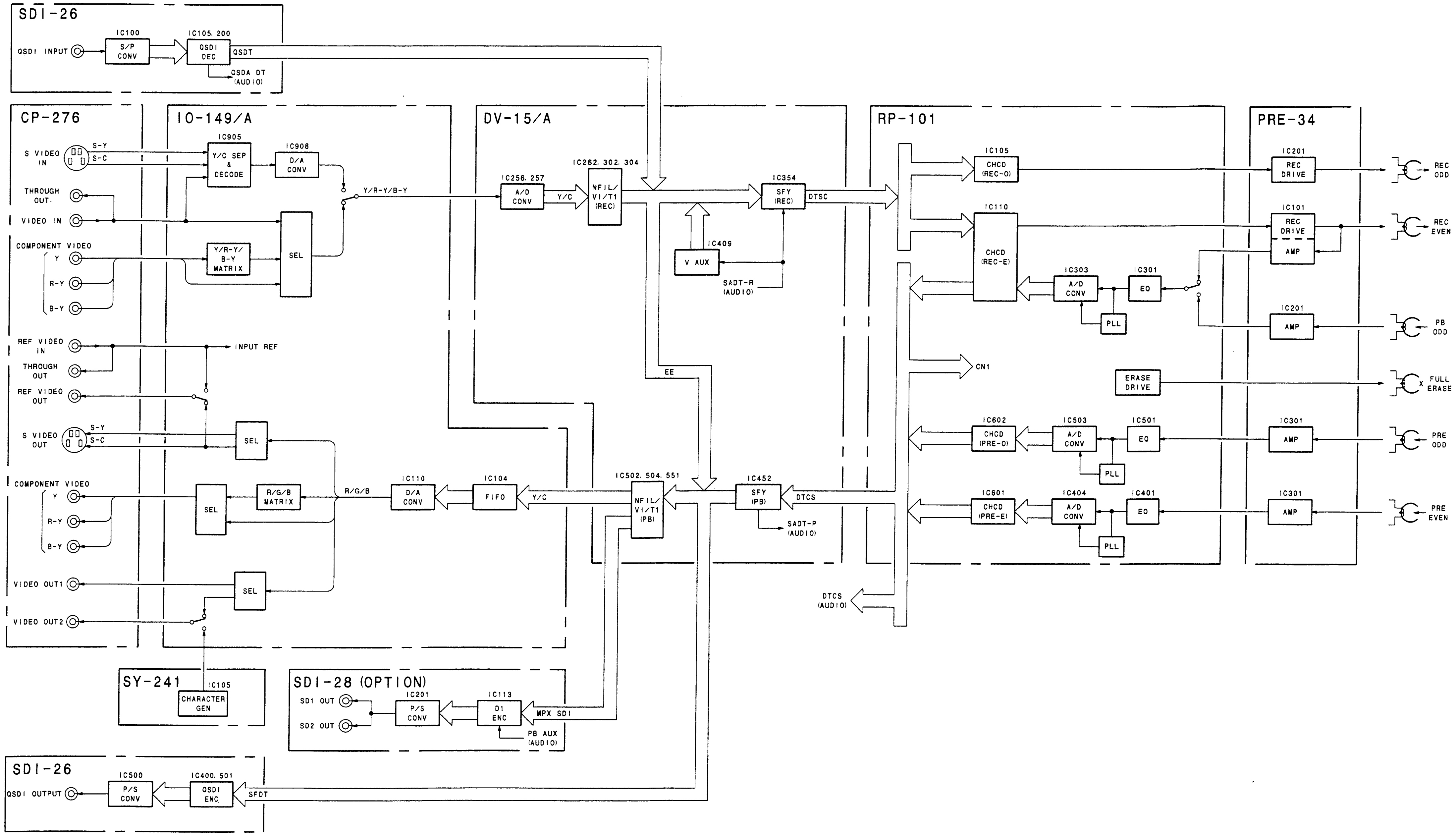

OVERALL BLOCK (1/3)

MODEL DSR-80/80P

 OVERALL (2/3)

 DSR-80/80P

OVERALL BLOCK (2/3)

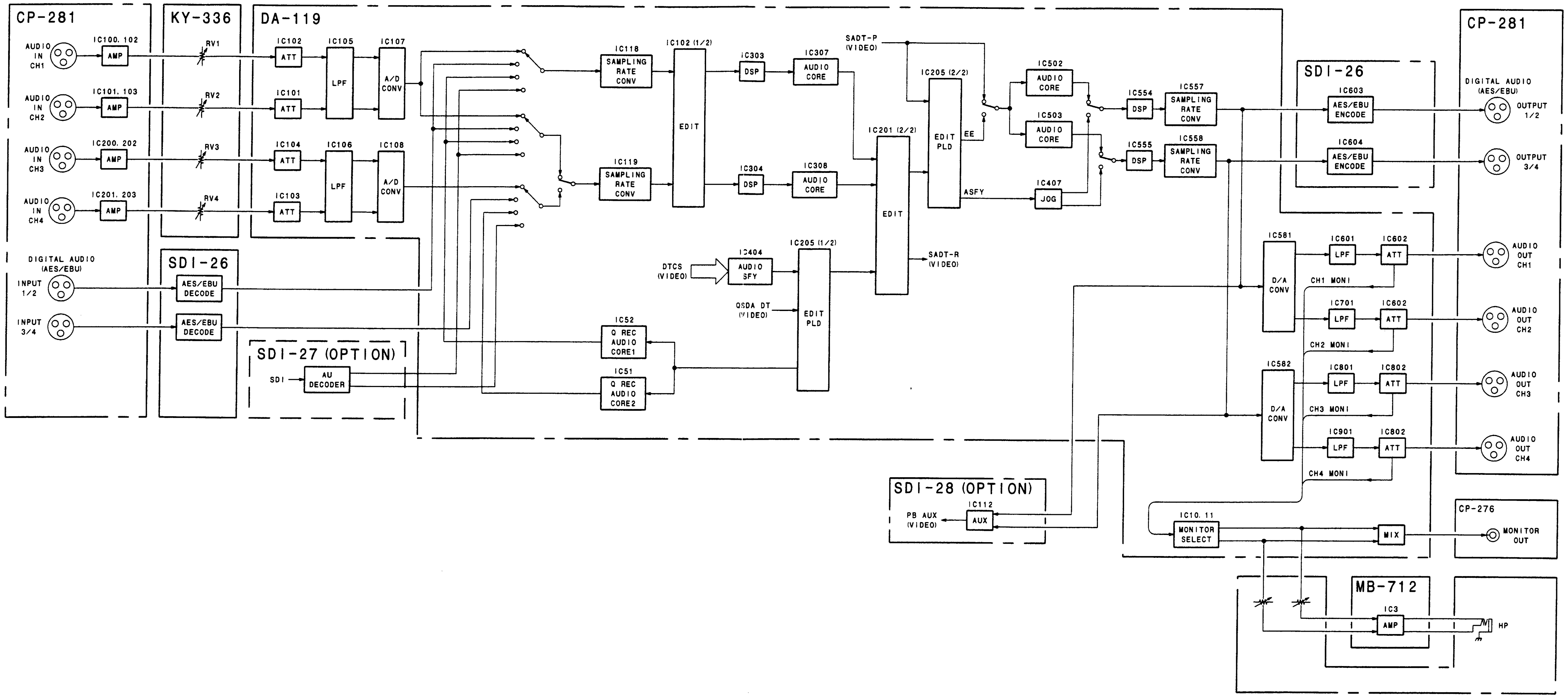

 11-4

OVERALL BLOCK (2/3)
MODEL DSR-80/80P

 OVERALL (3/3)

 DSR-80/80P

OVERALL BLOCK (3/3)

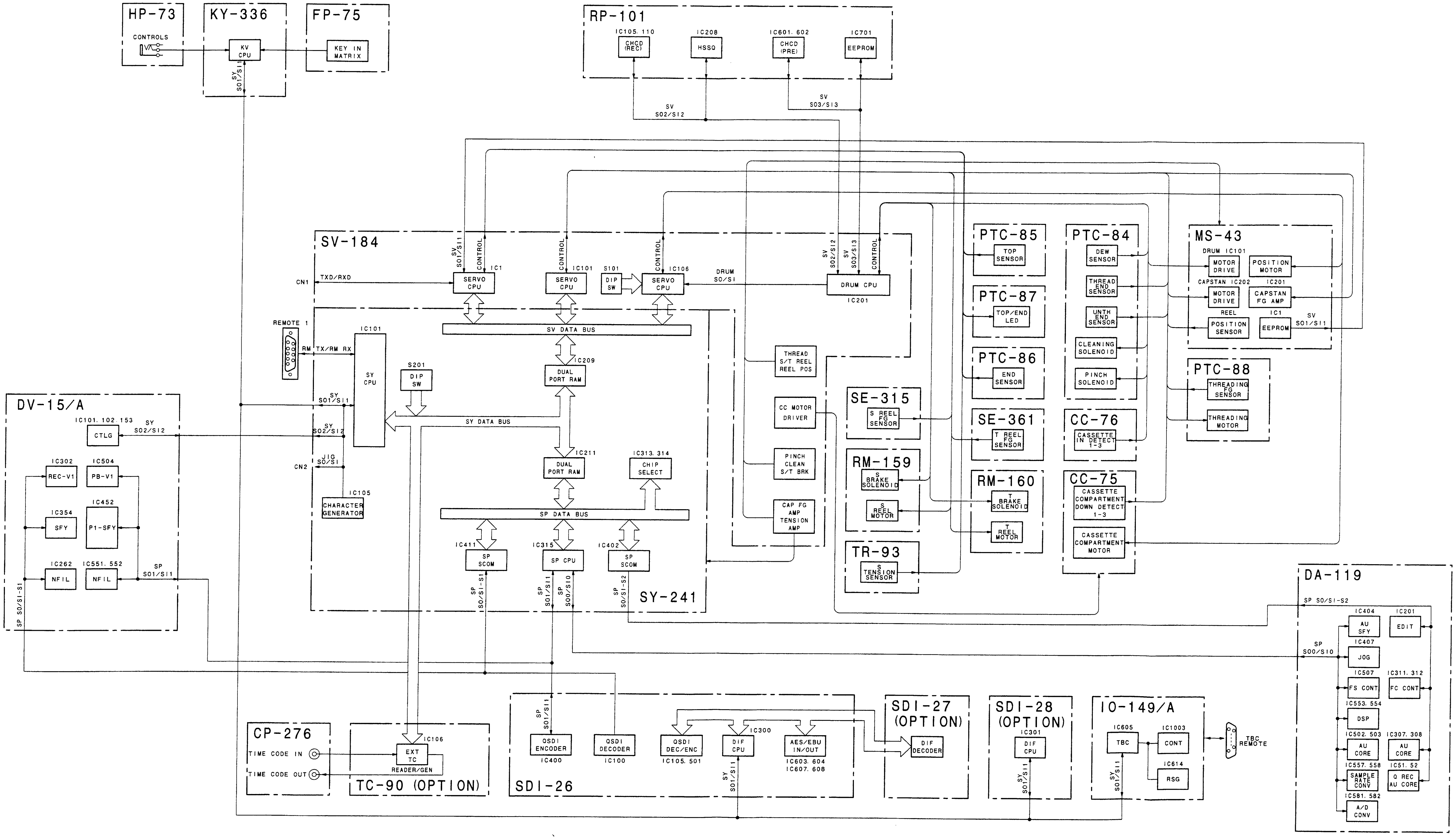

DA-119 (1/3): AUDIO ANALOG/DIGITAL IN/OUT PROCESS

DSR-80/80P

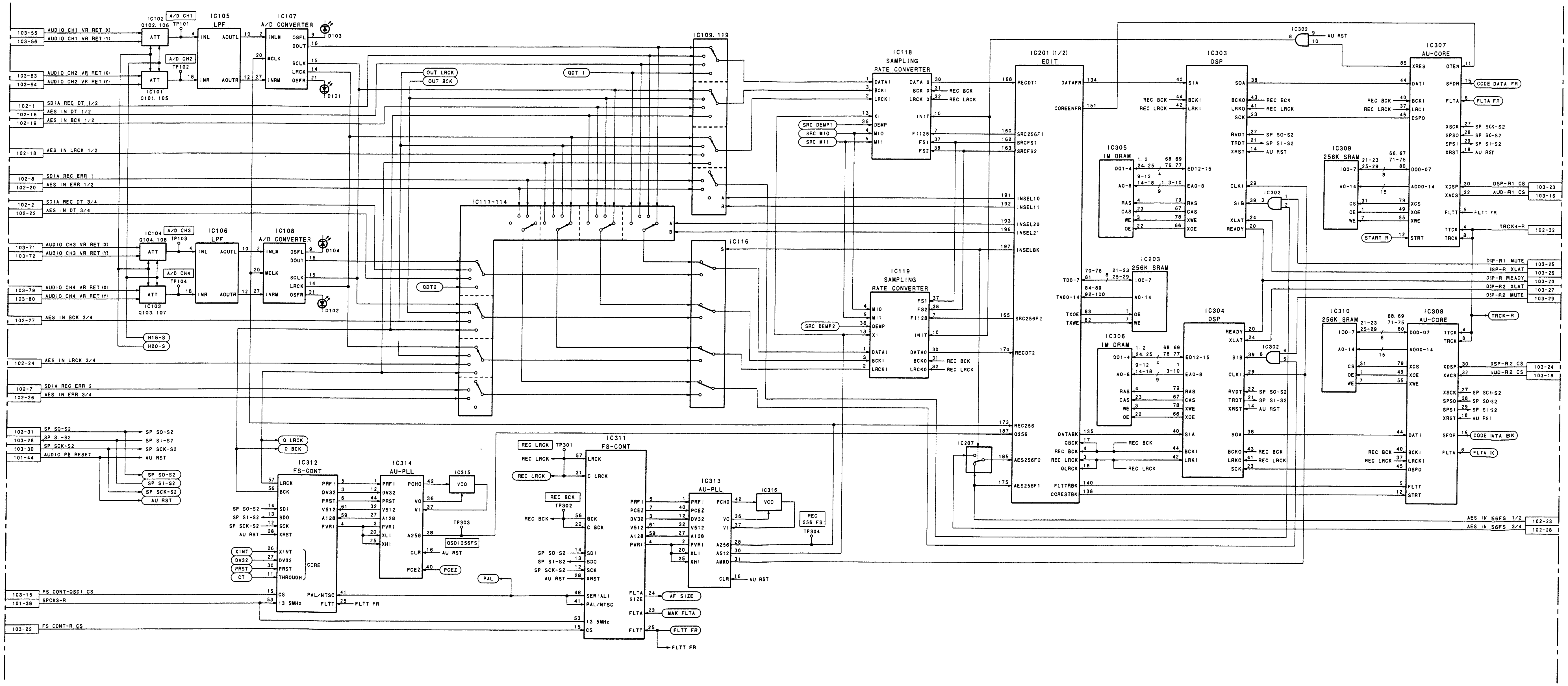

DA-119 (2/3): AUDIO ANALOG/DIGITAL IN/OUT PROCESS

DSR-80/80P

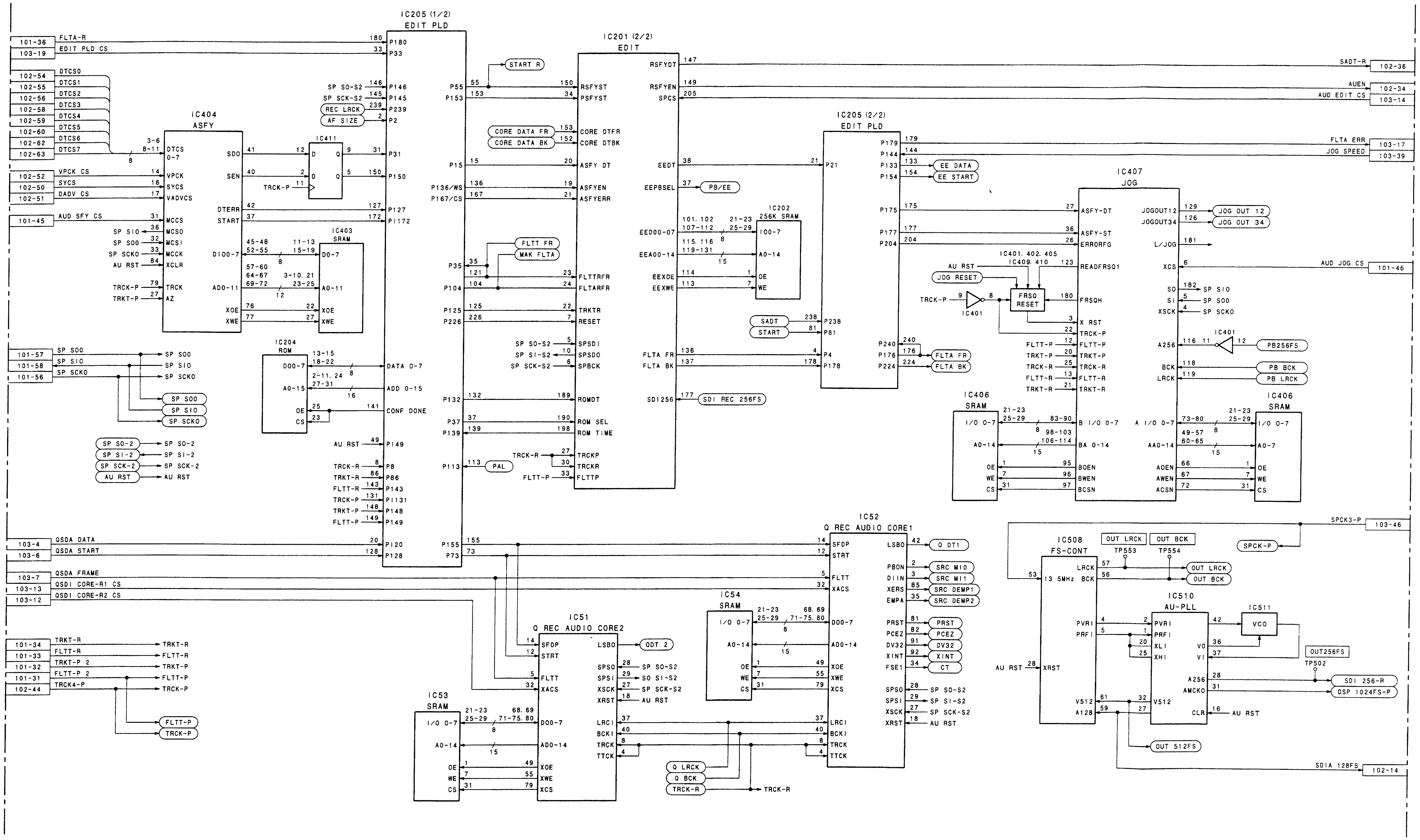

DA-119 (2/3)
MODEL DSR-80/80P

DSR-80/80P

DA-119 (3/3): AUDIO ANALOG/DIGITAL IN/OUT PROCESS

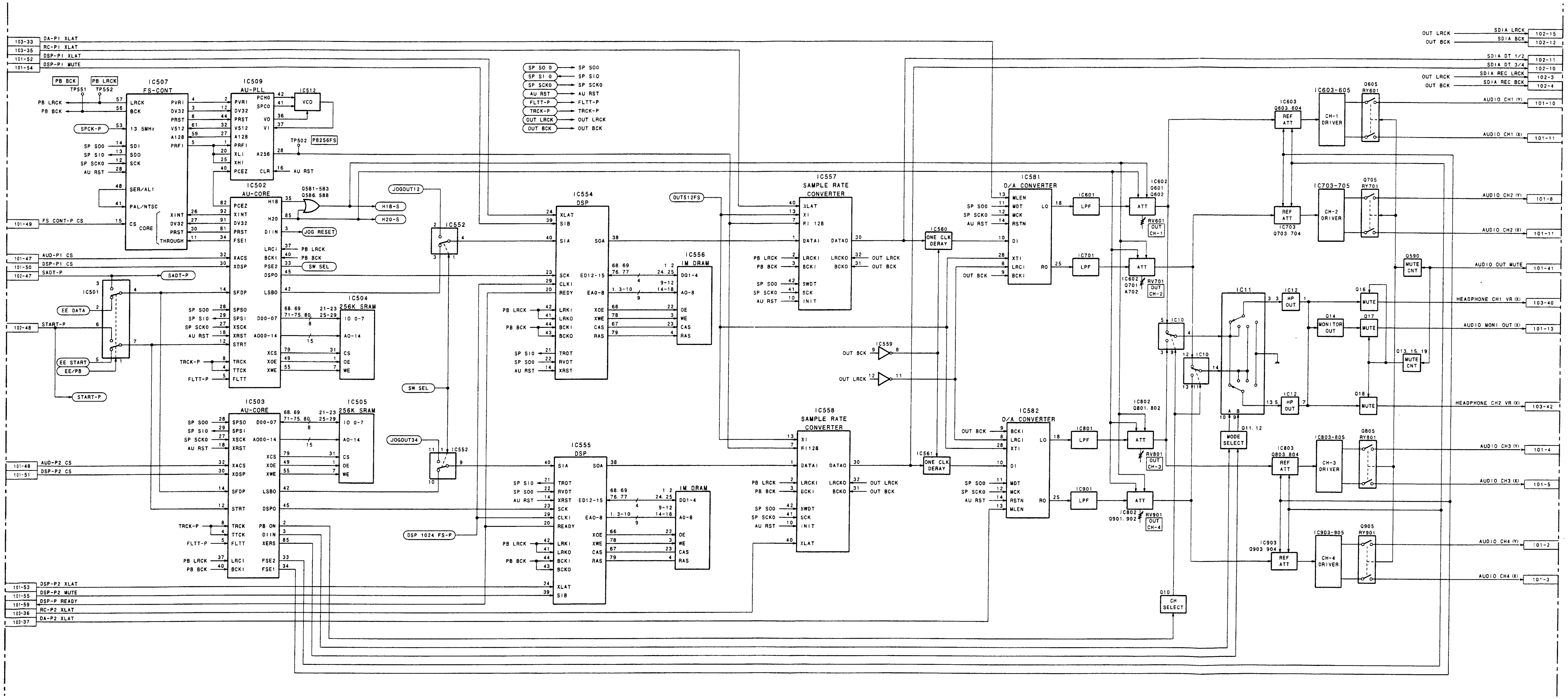

DA-119 (3/3)
MODEL DSR-80/80P

DSR-80/80P

DV-15/15A (1/2): VIDEO DIGITAL IN/OUT PROCESS

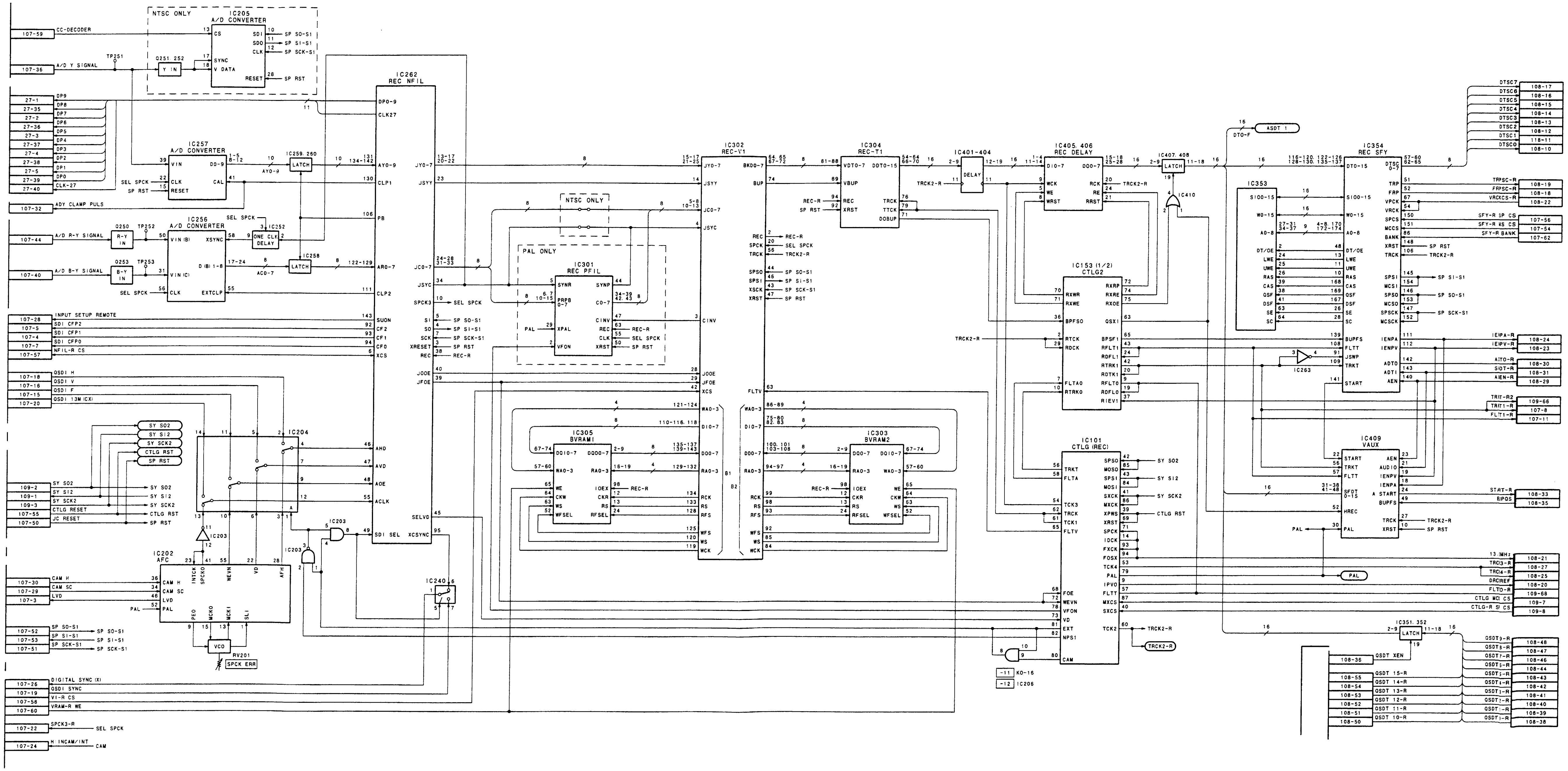

DSR-80/80P

DV-15/15A (2/2): VIDEO DIGITAL IN/OUT PROCESS

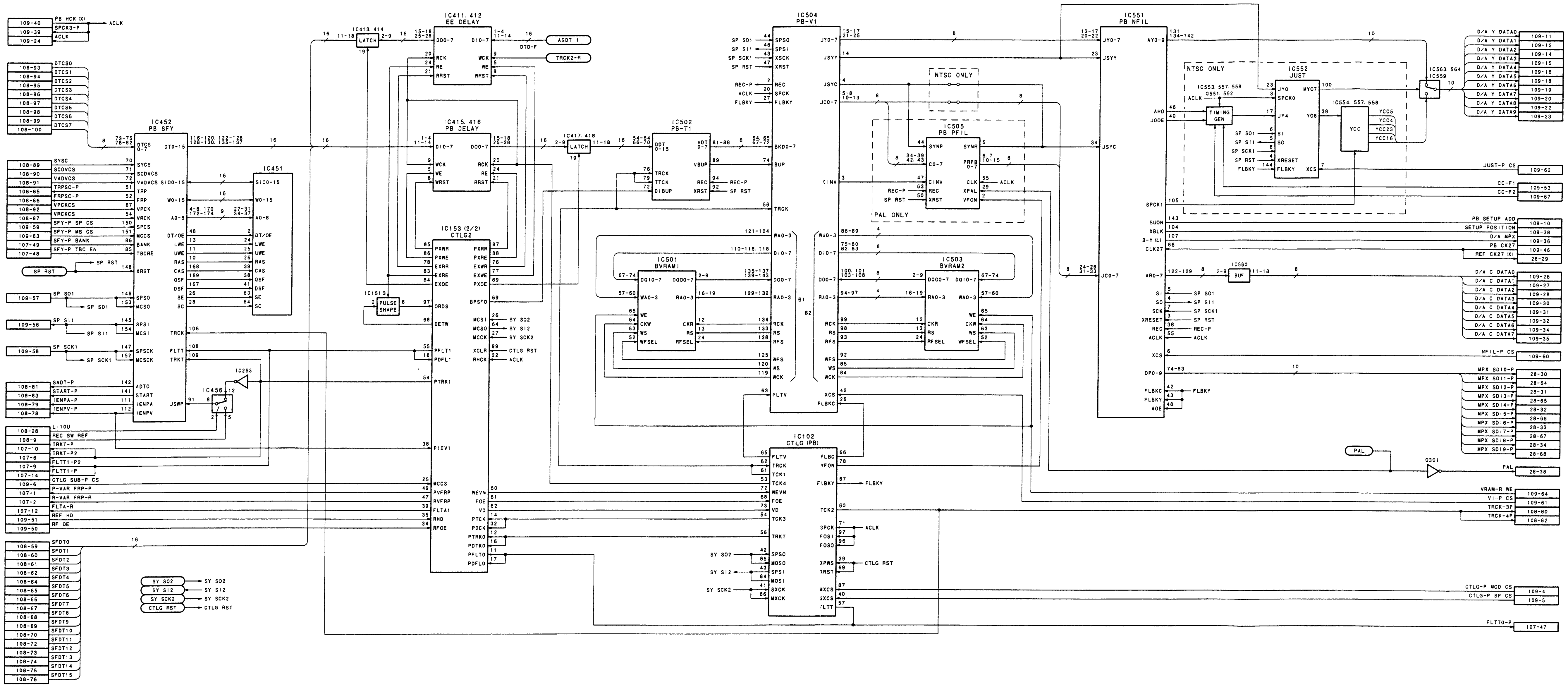

DV-15/15A (2/2)
MODEL DSR-80/80P

DSR-60/60P

AUDIO
DV-17/17A: AUDIO DIGITAL/ANALOG PROCESS

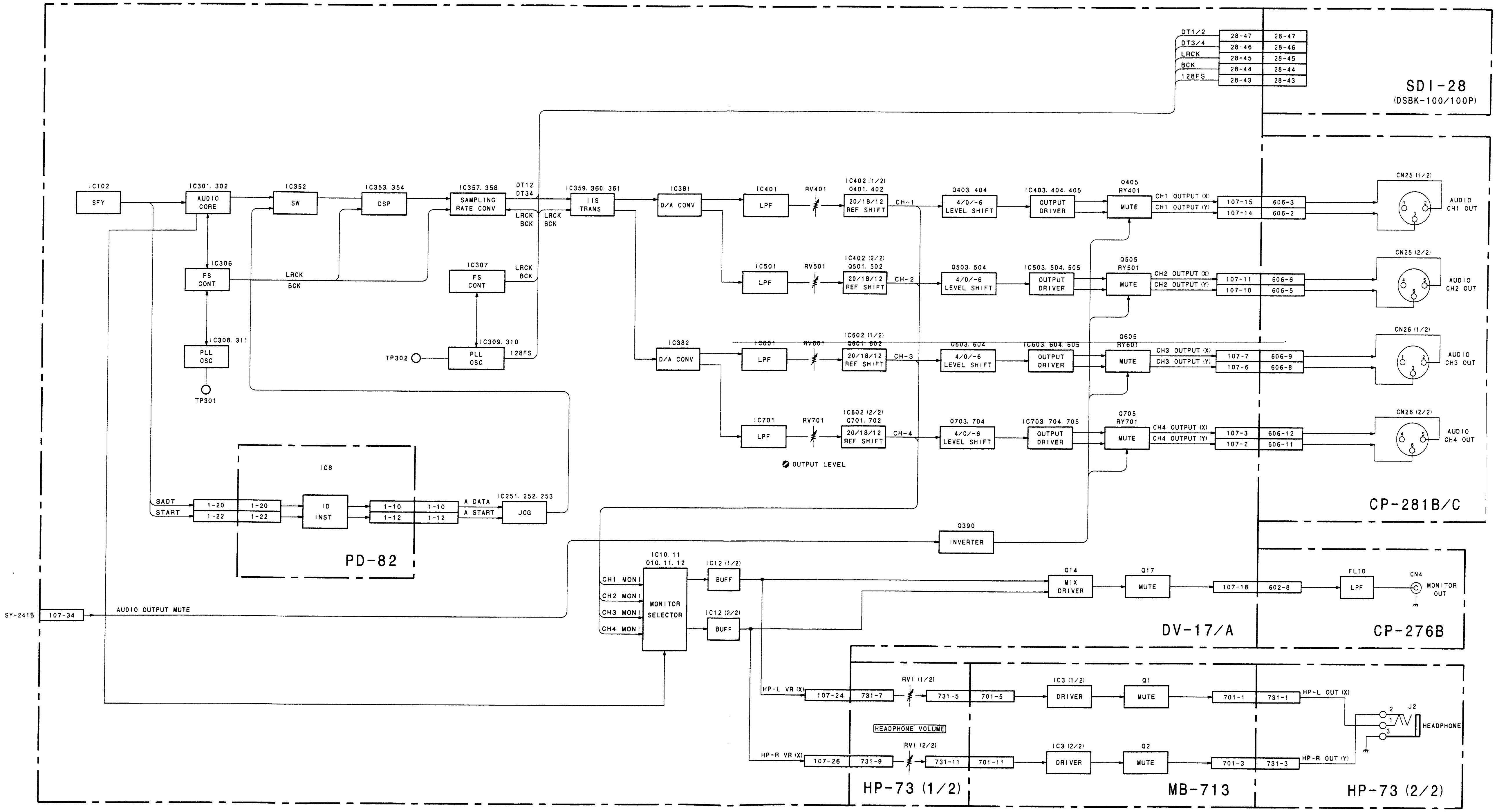

AUDIO
MODEL DSR-60/60P

DSR-60/60P

DV-17/17A: VIDEO DIGITAL PROCESS

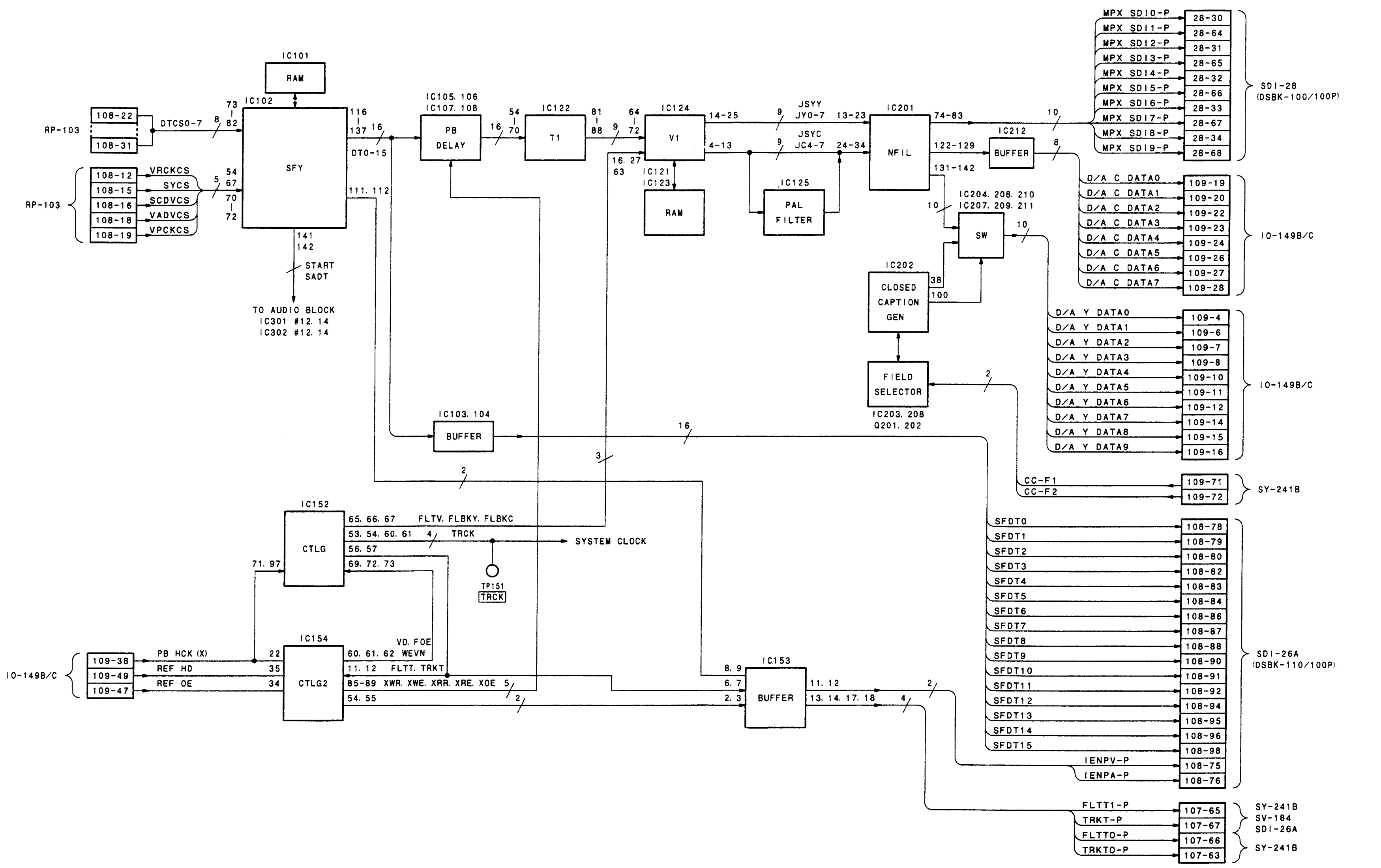

DV-17/17A
MODEL DSR-60/60P

IO-149/149A/149B/149C (1/3)

IO-149/149A/149B/149C (1/3): VIDEO ANALOG OUT PROCESS (DSR-60/60P)
VIDEO ANALOG IN/OUT PROCESS (DSR-80/80P)

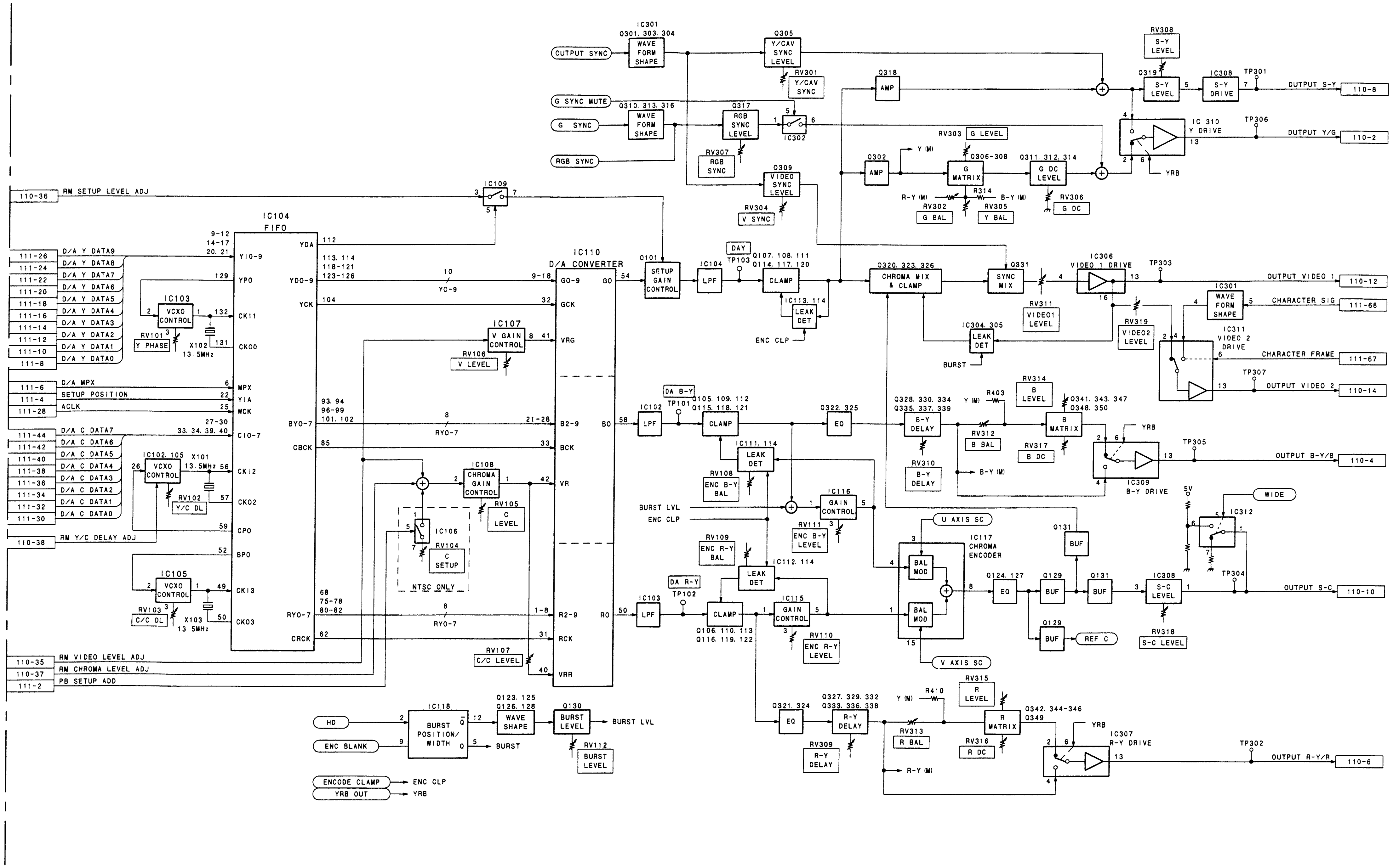

IO-149/149A/149B/149C (2/3): VIDEO ANALOG OUT PROCESS (DSR-60/60P)
VIDEO ANALOG IN/OUT PROCESS (DSR-80/80P)

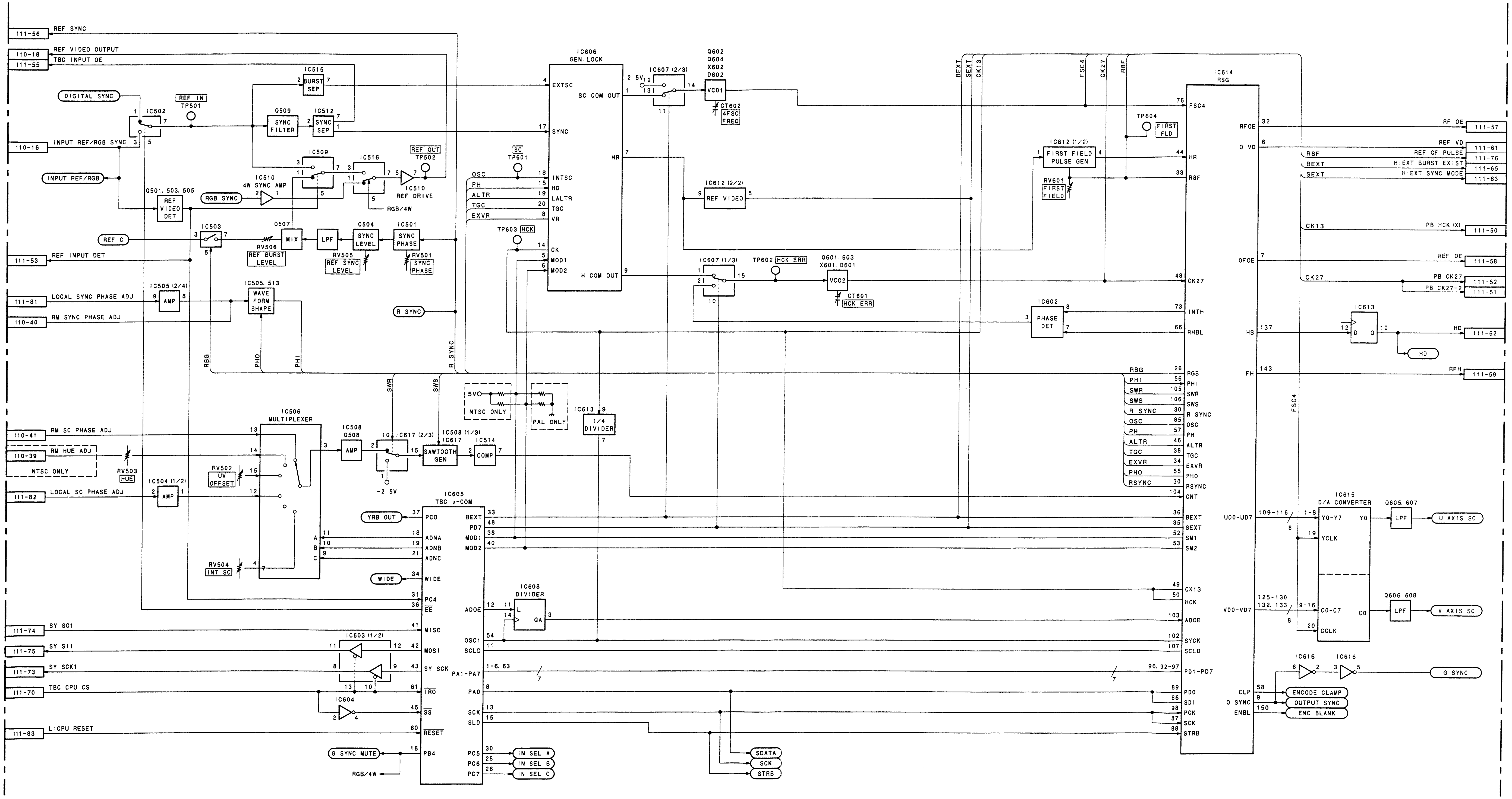

IO-149/149A/149B/149C (2/3)
MODEL DSR-80/80P/60/60P

IO-149/149A (3/3): VIDEO ANALOG IN/OUT PROCESS (DSR-80/80P)

DSR-80/80P

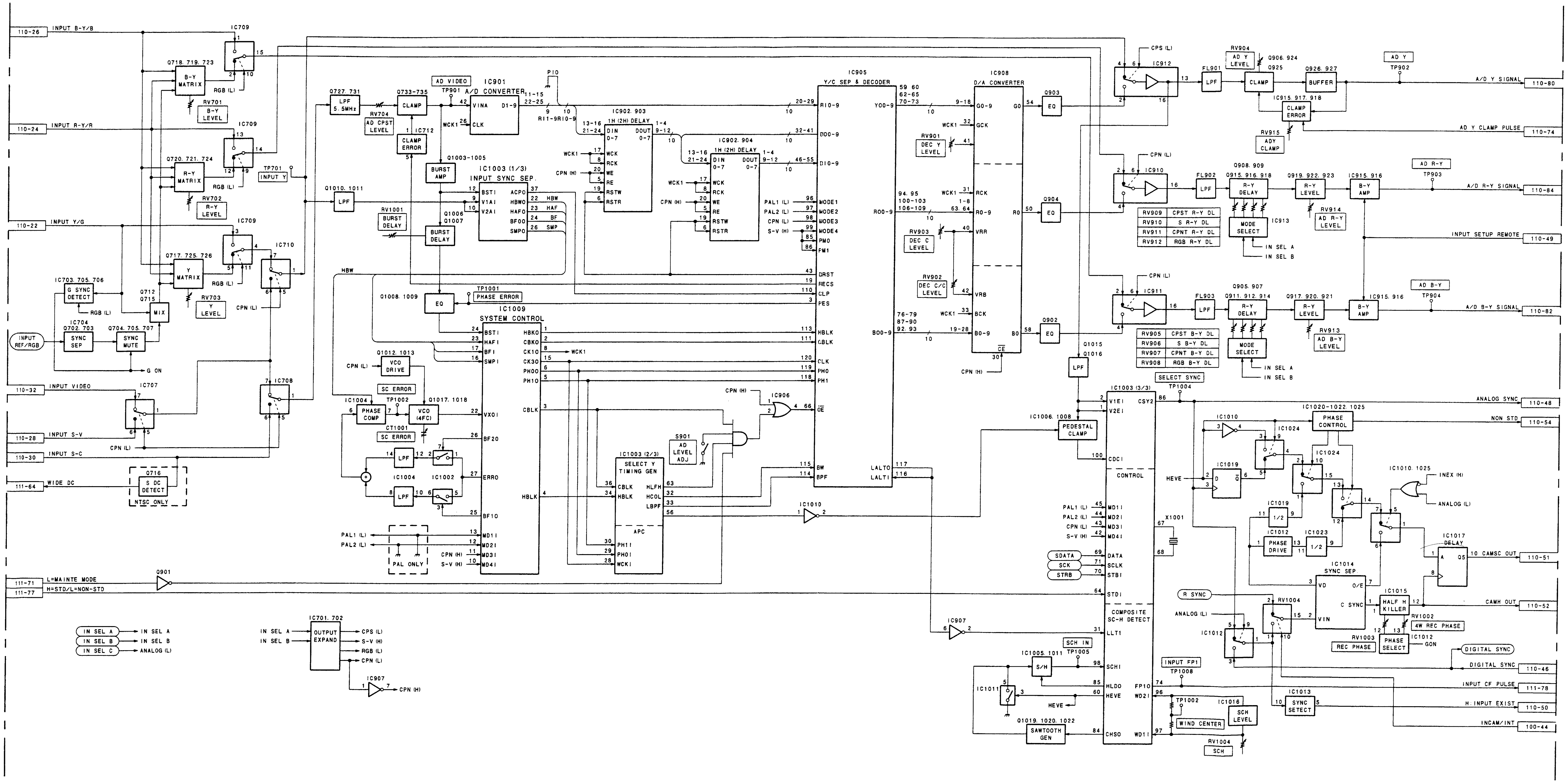

IO-149/149A (3/3)

MODEL DSR-80/80P

ɪNY-SP0754 / DRUCK 17

DSR-80/80P

PRE-34: REC/PB DIGITAL PROCESS

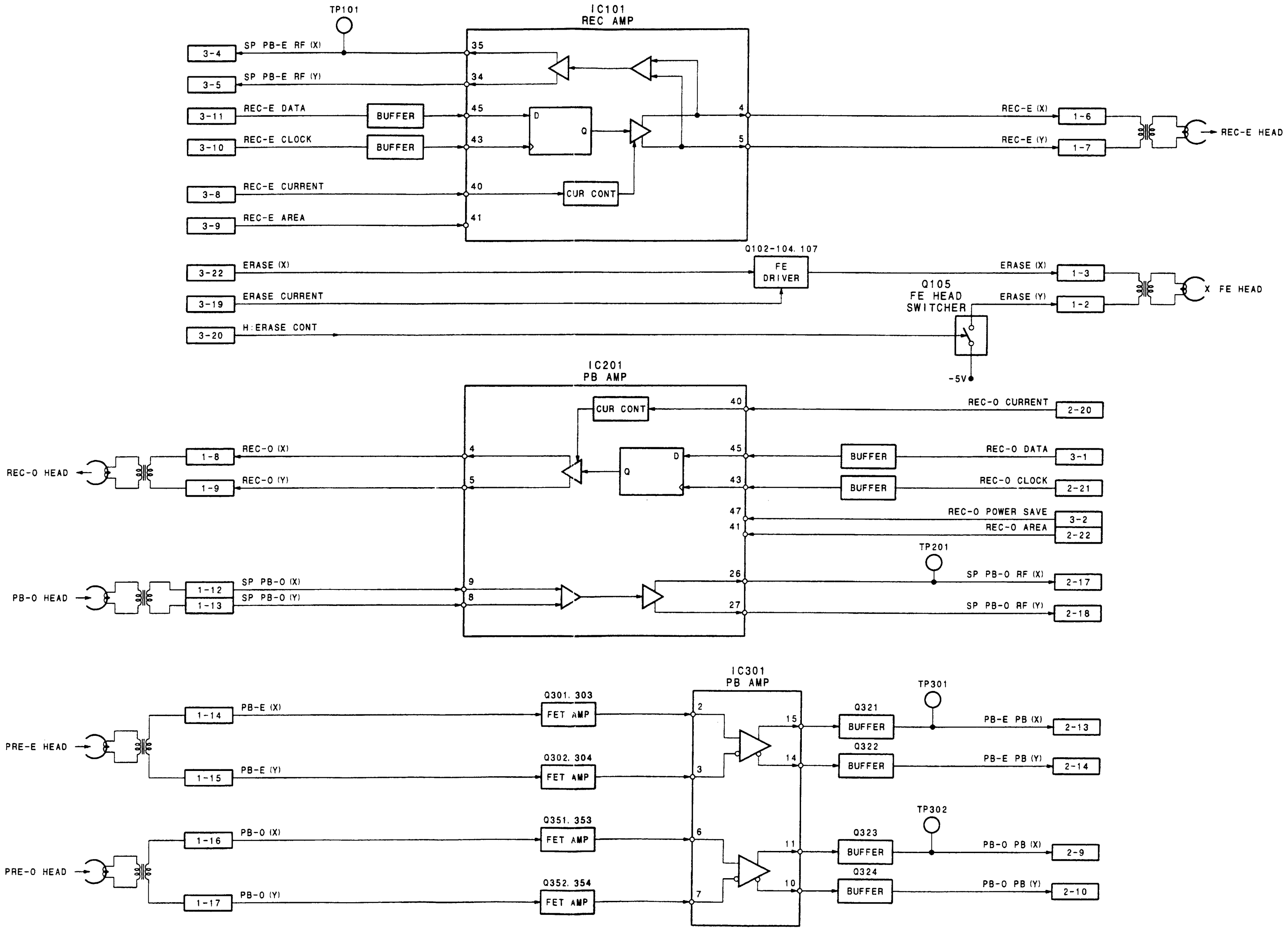

PRE-34
MODEL DSR-80/80P

DSR-60/60P

RF BLOCK
PRE-39: PB DIGITAL PROCESS
RP-103: HEAD AMP

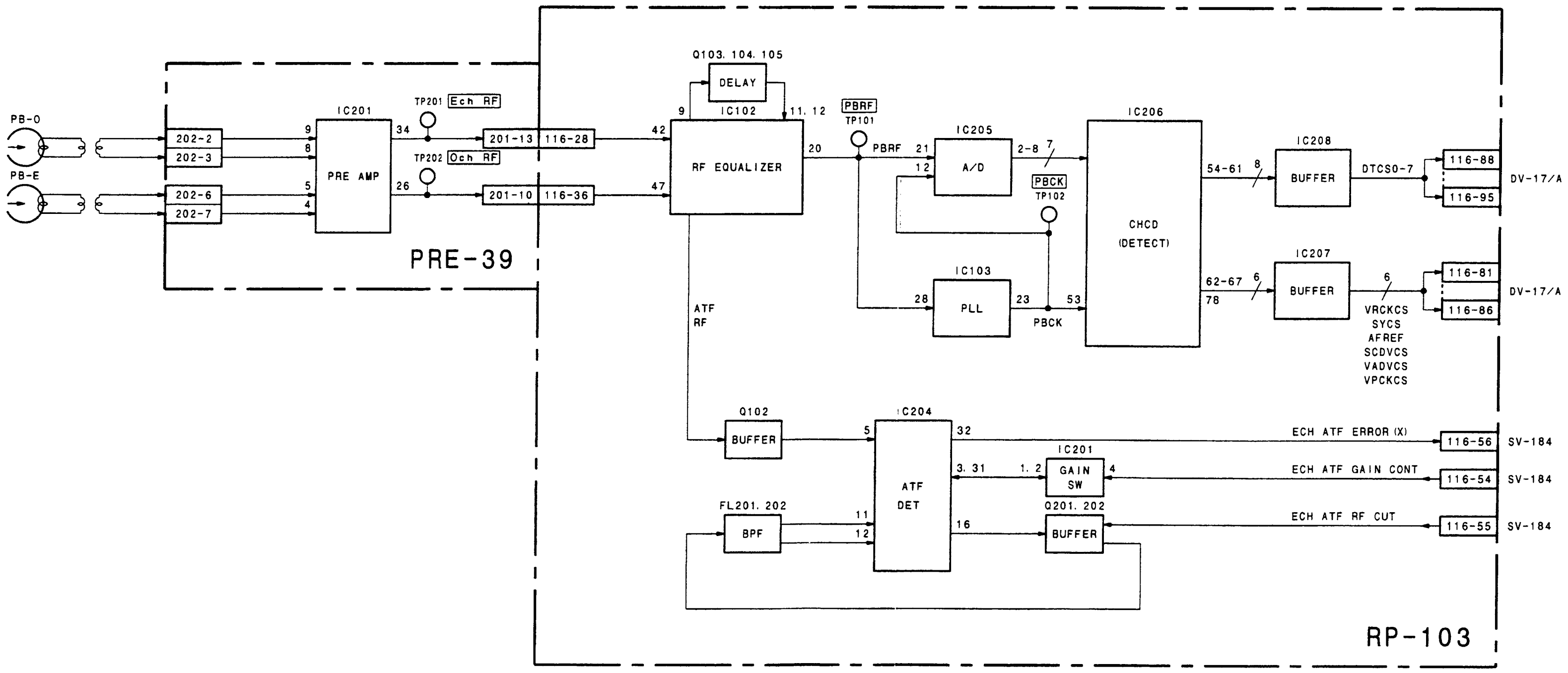

RF BLOCK
MODEL DSR-60/60P

RP-101 (1/2)

DSR-80/80P

DSR-80/80P

RP-101: REC/PB HEAD AMP, RF A/D

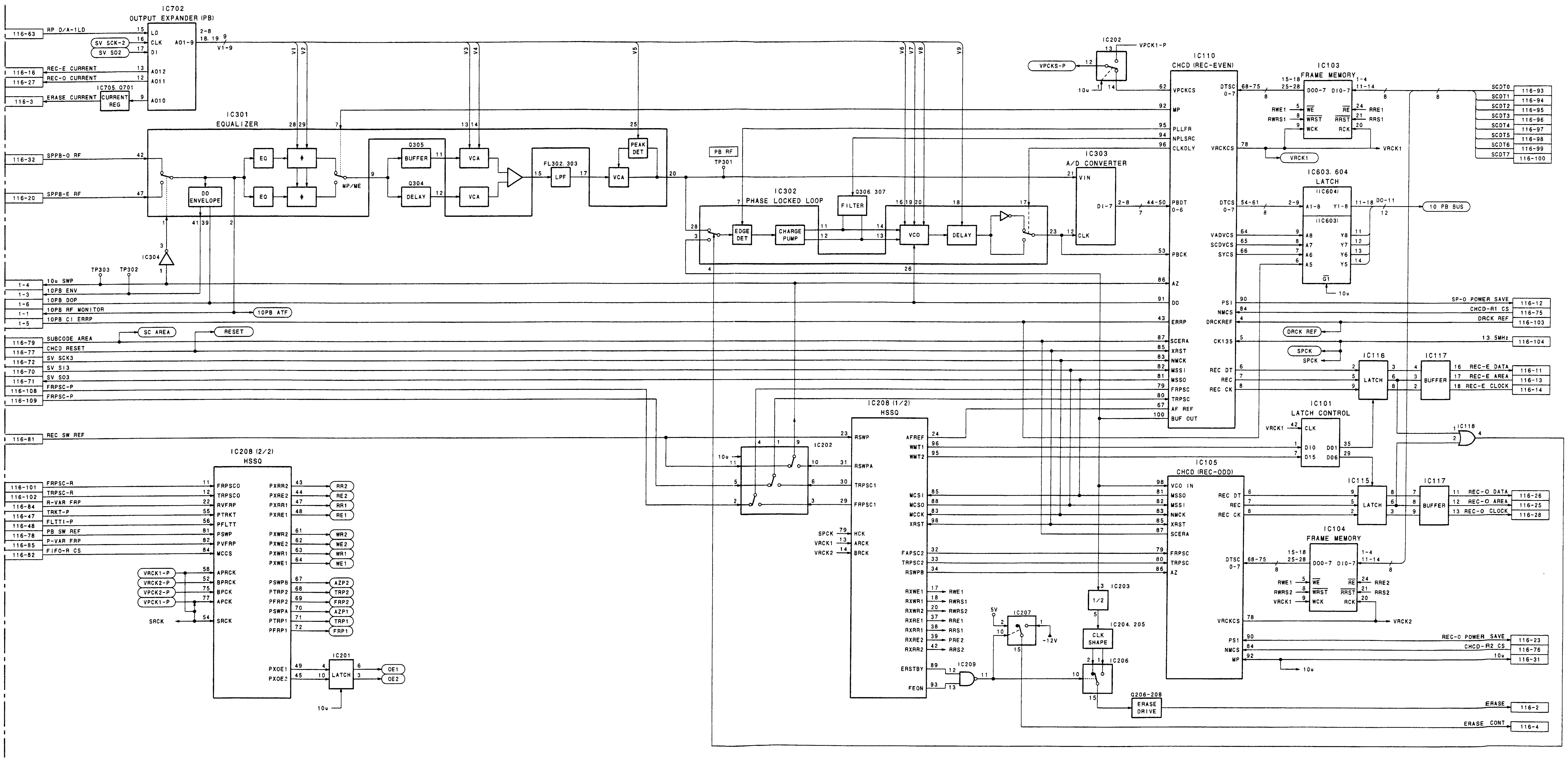

RP-101 (1/2)

MODEL DSR-80/80P

11-20

SONY-SP0754 / DRUCK 20

DSR-80/80P

RP-101: REC/PB HEAD AMP, RF A/D

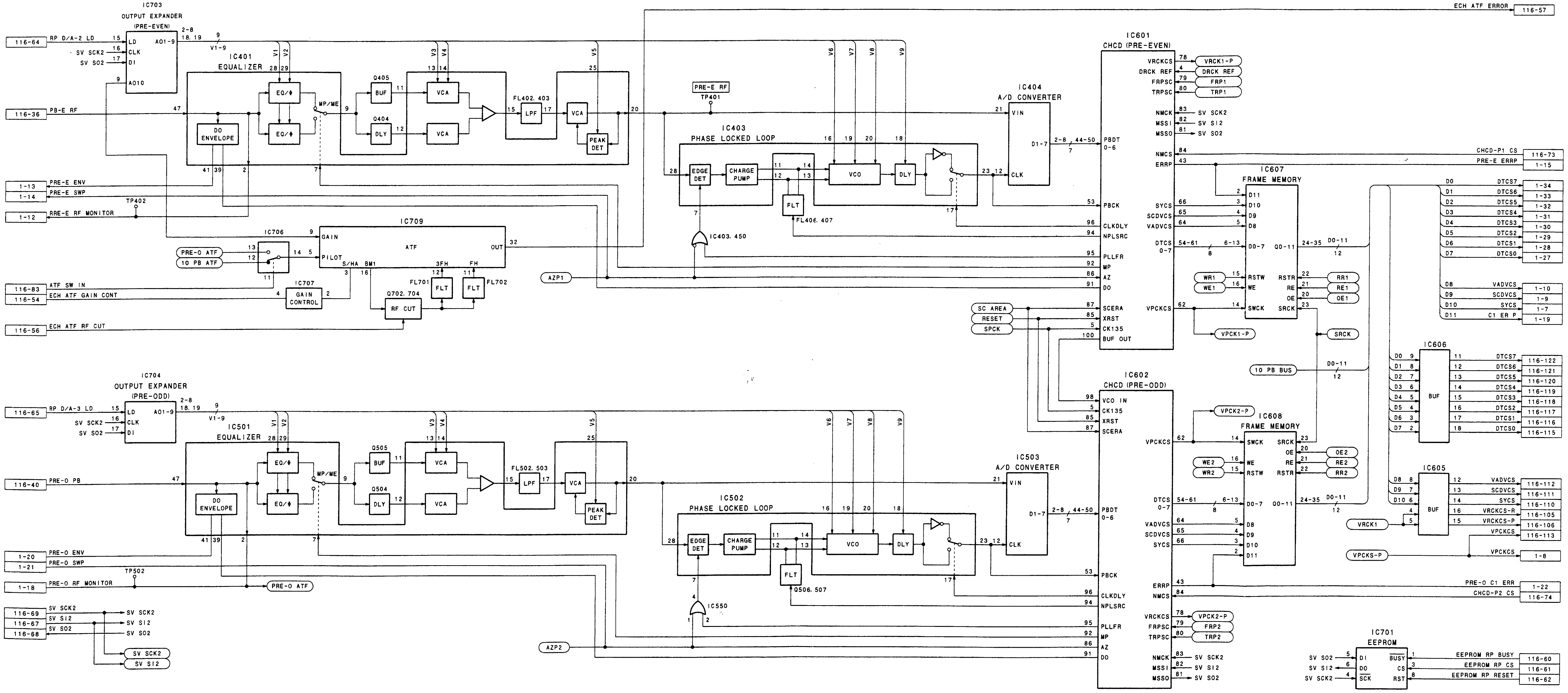

RP-101 (2/2)
MODEL DSR-80/80P

)NY-SP0754 / DRUCK 21

SDI-26/26A: QSDI OUTPUT INTERFACE (DSR-60/60P)
QSDI INPUT/OUTPUT INTERFACE (DSR-80/80P)

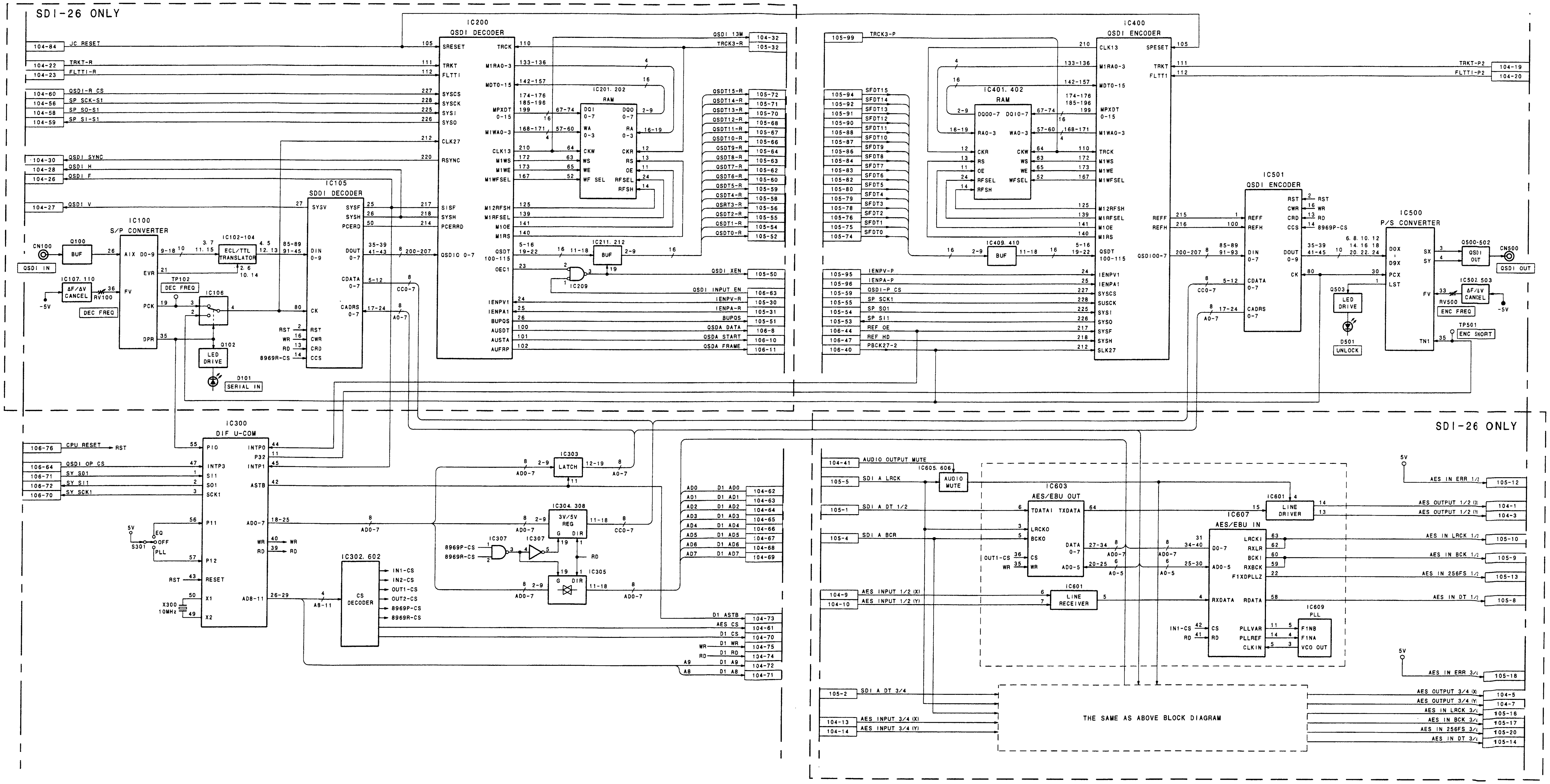

SDI-26/26A
MODEL DSR-80/80P
MODEL DSBK-110/110P

SDI-27: SDI INPUT INTERFACE

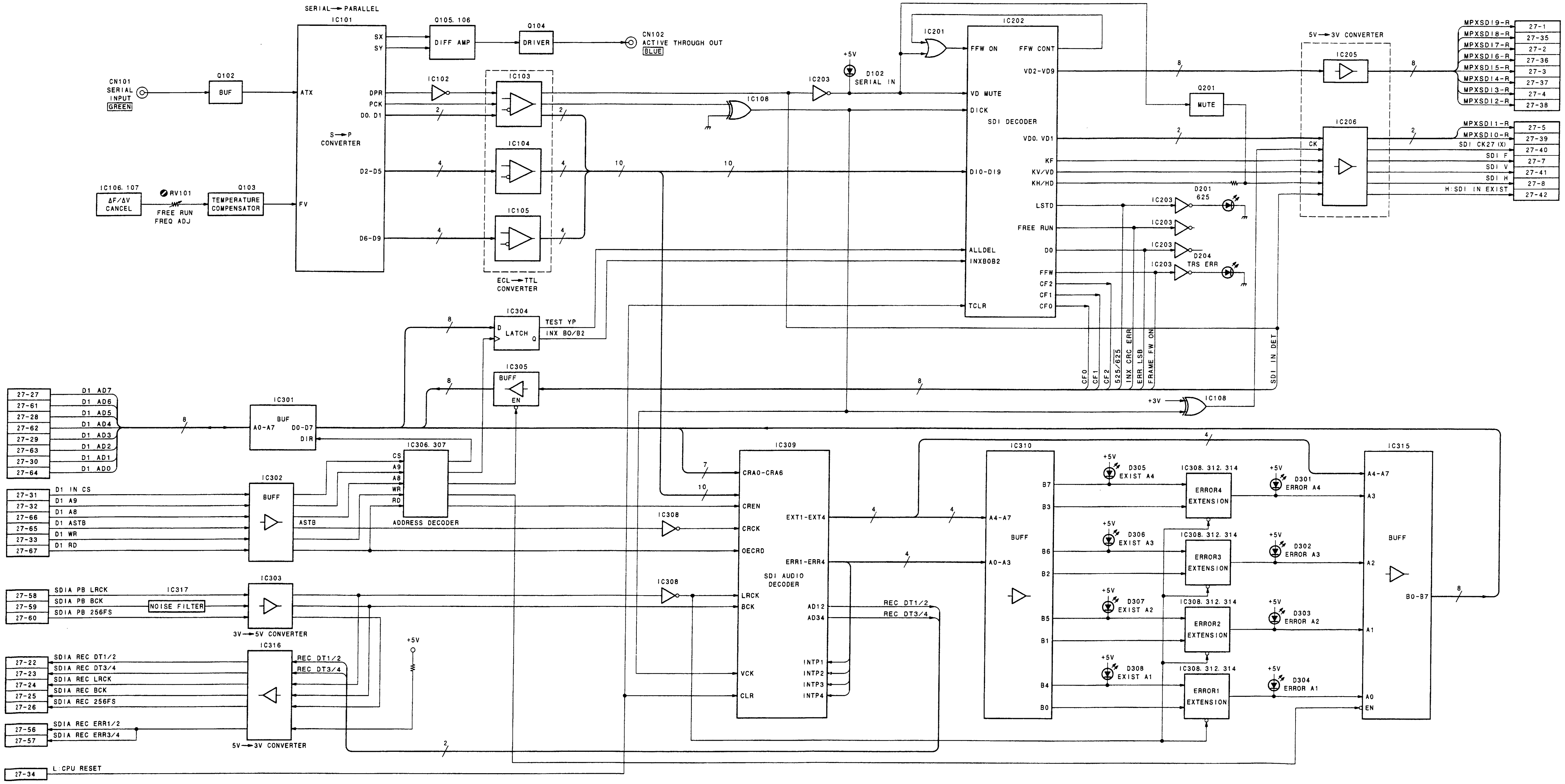

SDI-27

MODEL DSBK-120/120P

NY-SP0754 / DRUCK 23

SDI-28: SDI OUTPUT INTERFACE

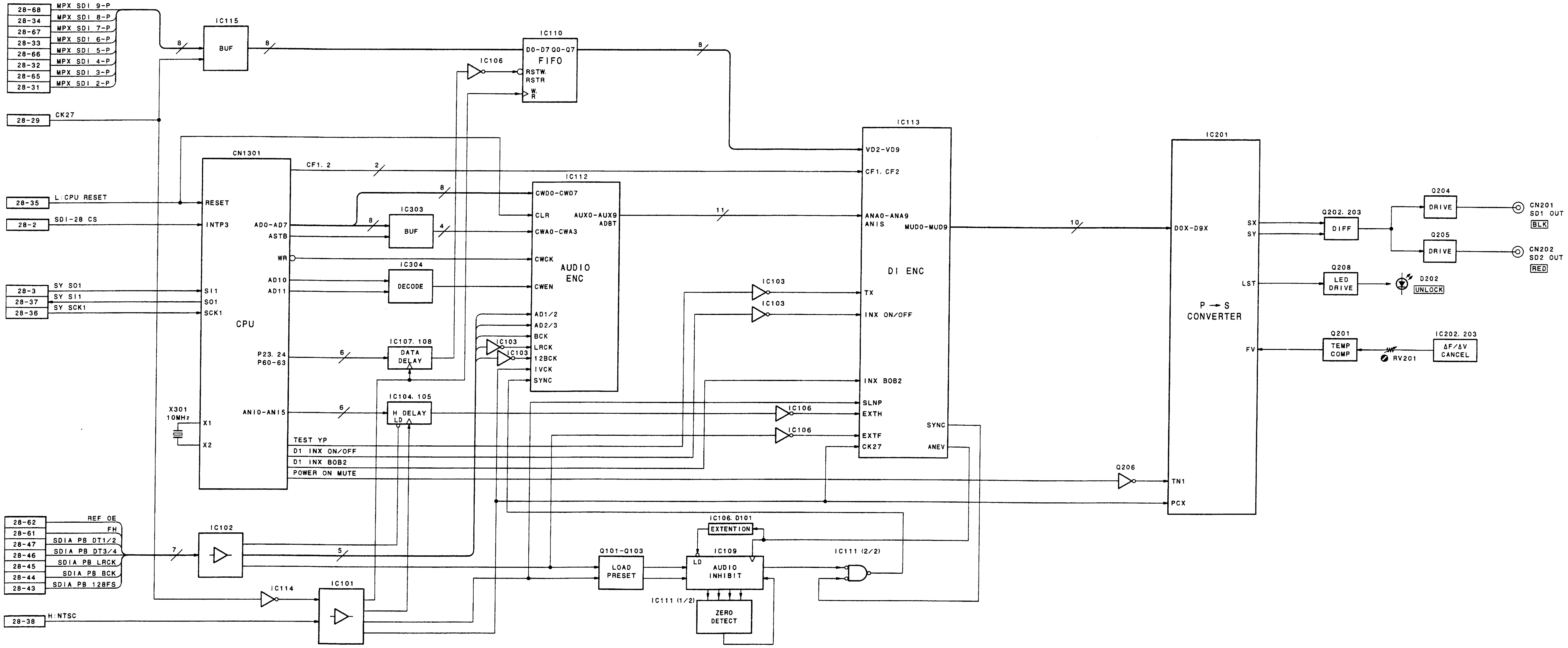

SDI-28
MODEL DSBK-100/100P
MODEL DSBK-120/120P

)NY-SP0754 / DRUCK 25

SV-184 (1/2): SERVO SYSTEM

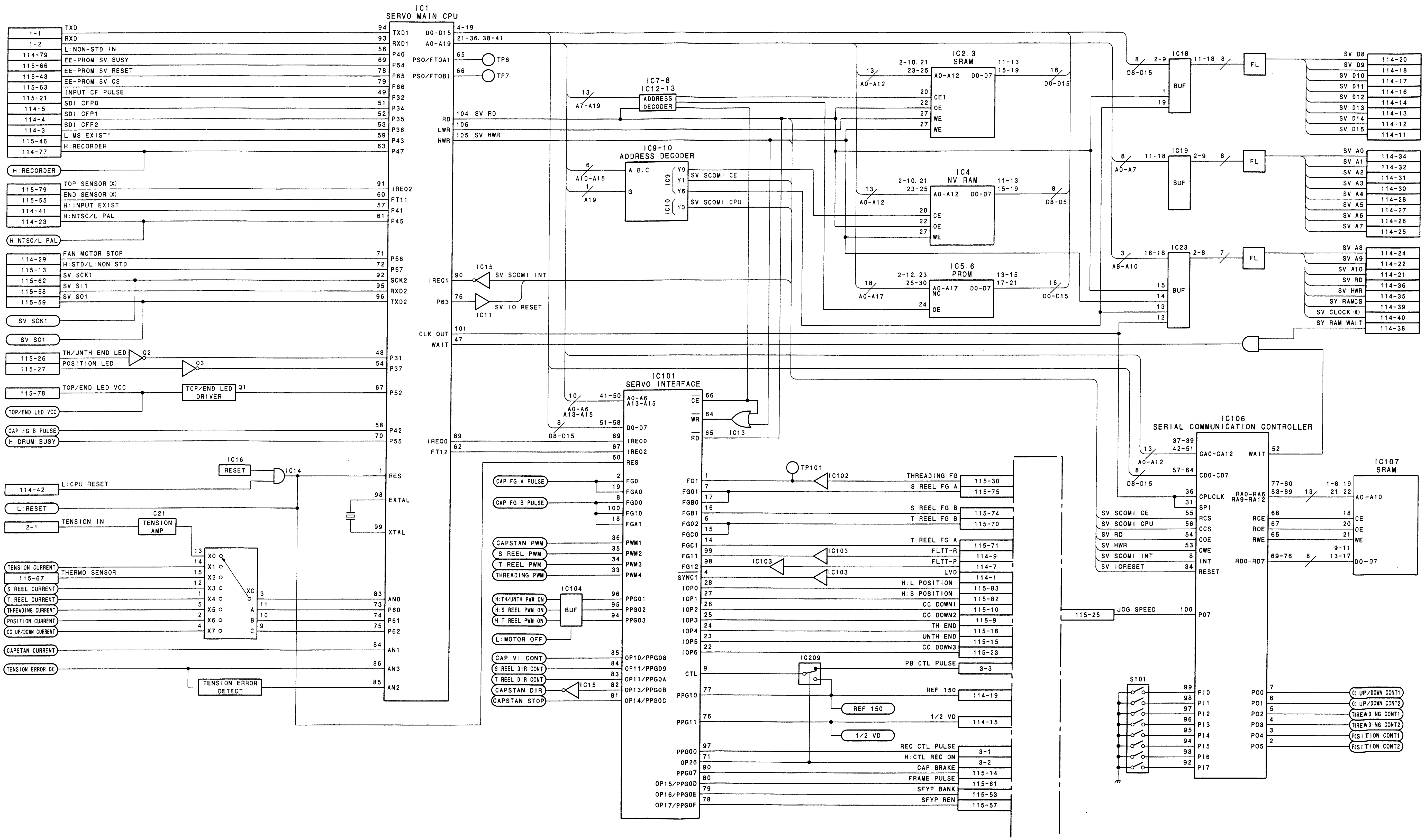

SV-184 (1/2)
MODEL DSR-80/80P/60/60P

SV-184 (2/2): SERVO SYSTEM

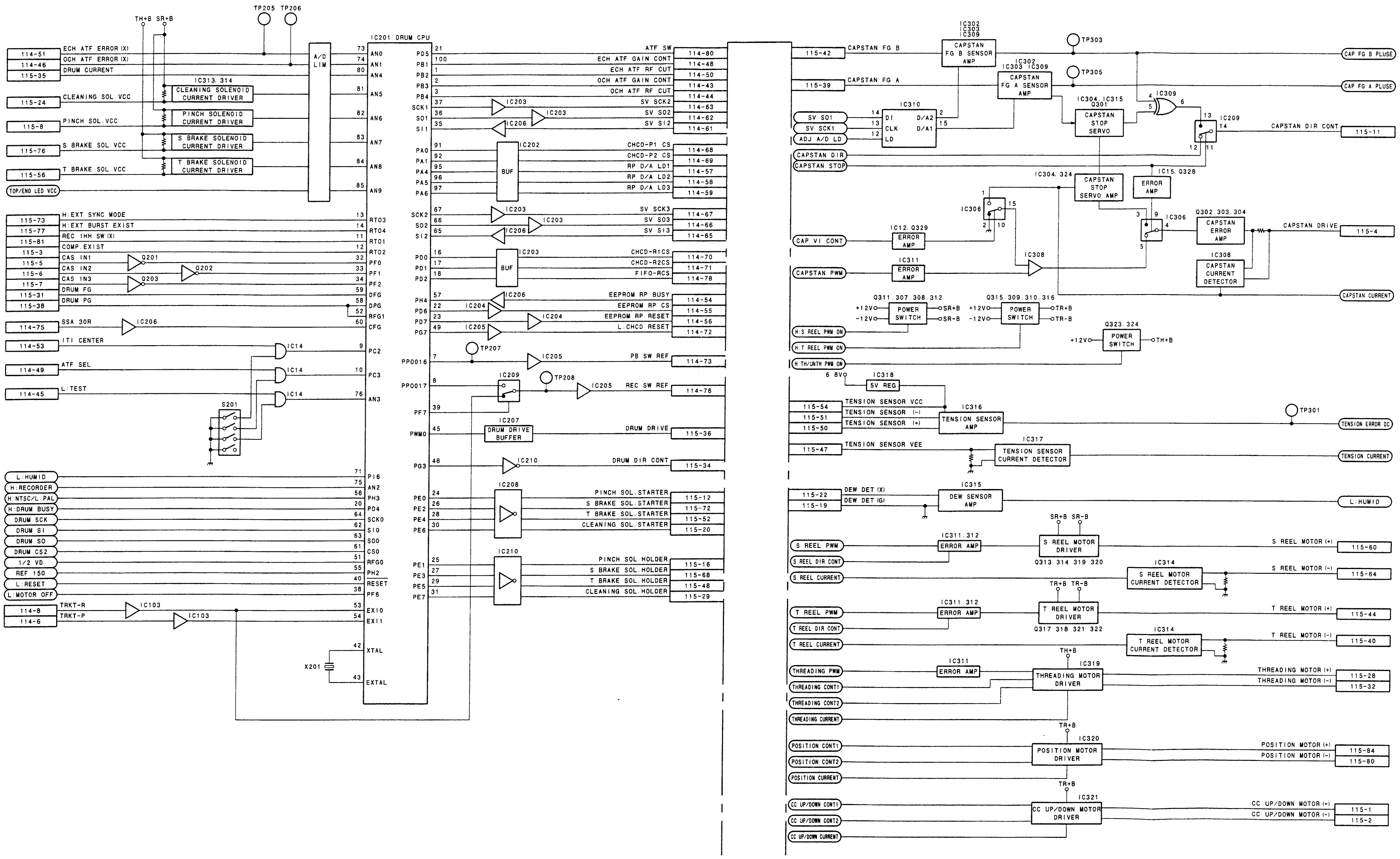

SY-241/241B (1/2): SYSTEM CONTROL

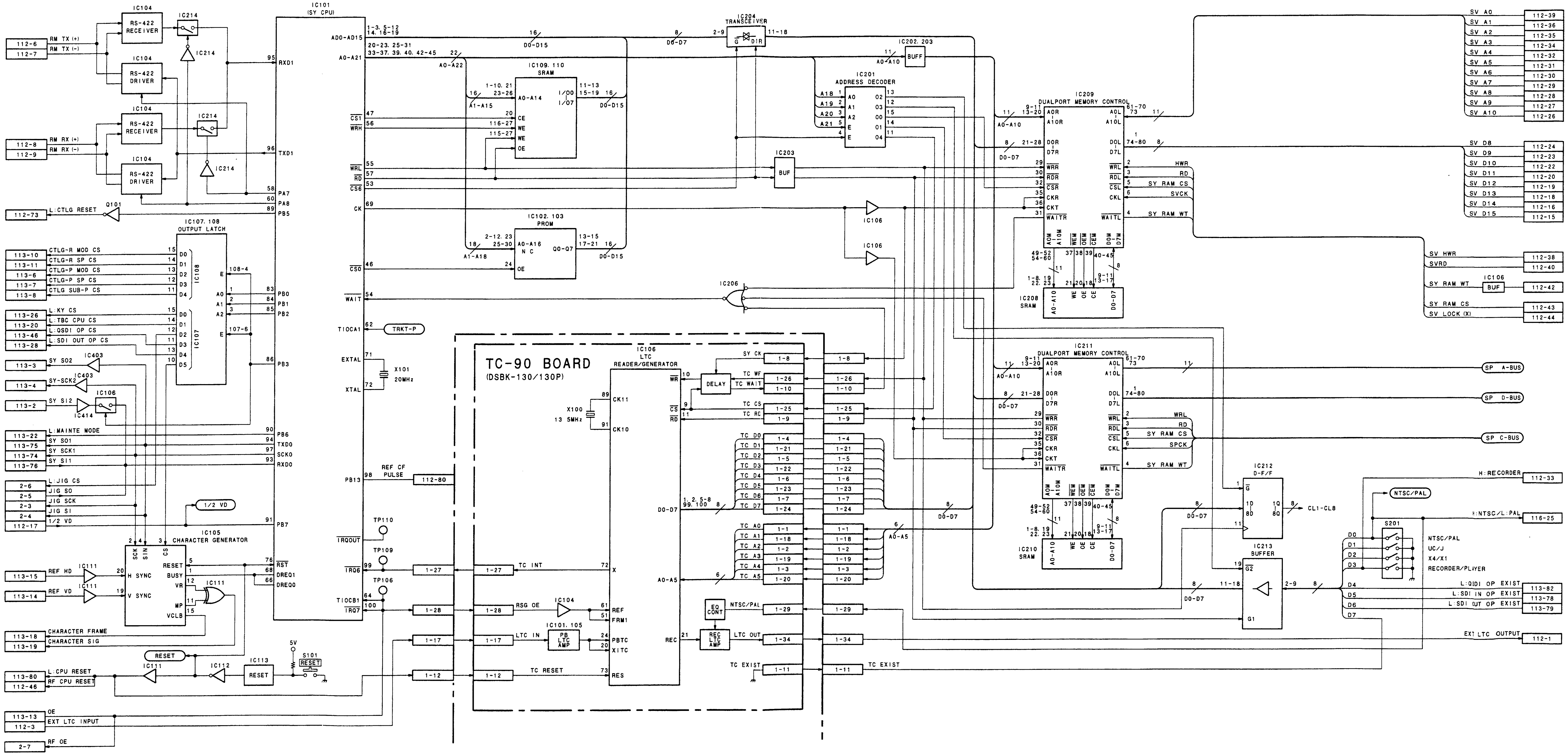

SY-241/241B (1/2)

MODEL DSR-80/80P/60/60P

DSR-60/60P

SY-241B (2/2): SYSTEM CONTROL

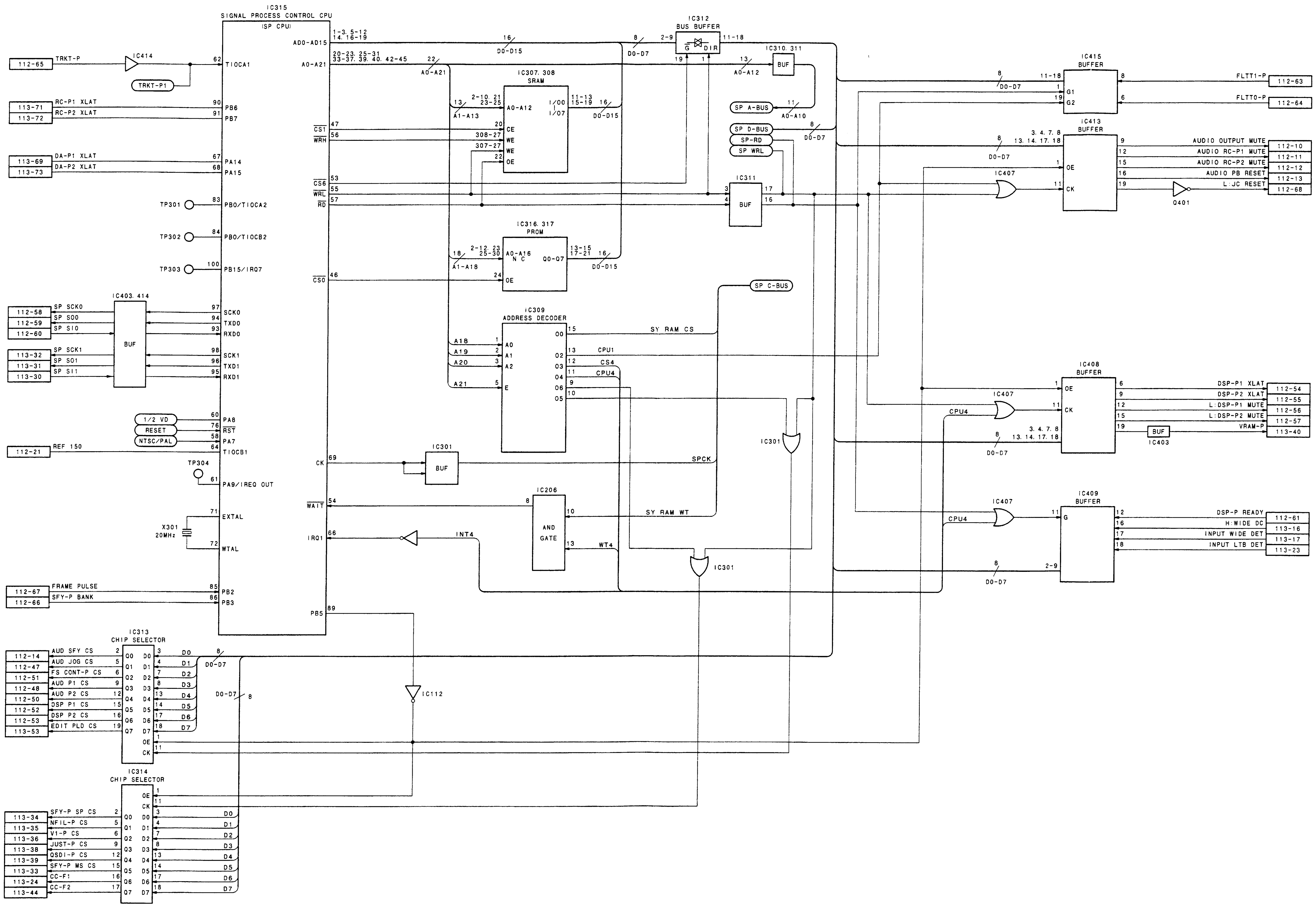

SY-241B (2/2)

MODEL DSR-60/60P

SY-241 (2/2): SYSTEM CONTROL

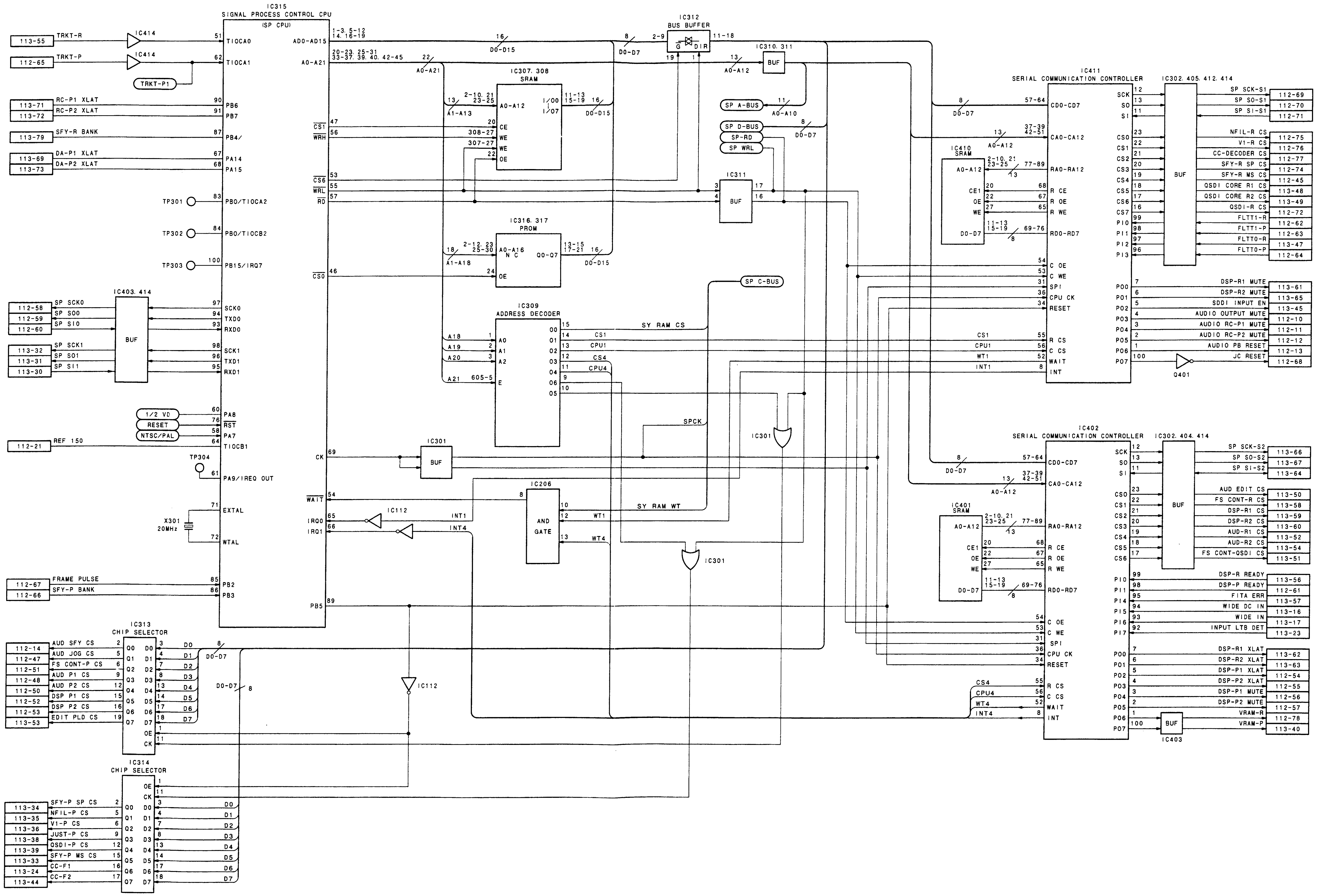

SY-241 (2/2)
MODEL DSR-80/80P

SECTION 12
BOARD LAYOUTS

DSR-60/60P

BOARD NAME	CIRCUIT FUNCTION	PAGE
CC-75	CASSETTE COMPARTMENT DOWN 1/2/3 SENSOR CC UP/DOWN MOTOR CONNECTION	12-2
CC-76	CASSETTE IN 1/2/3 SENSOR	12-2
CP-276B	ANALOG VIDEO IN/OUT, TC OUT, AUDIO MONITOR	12-3
CP-281B/281C	ANALOG AUDIO OUT	12-4
DV-17/17A	VIDEO DIGITAL OUT PROCESS, AUDIO ANALOG/DIGITAL OUT PROCESS	12-10
FP-75	SUB PANEL MENU KEY/AUDIO MONITOR SWITCH, SYNC/SC PHASE ADJUST	12-13
HP-73	HEADPHONE VOLUME/CONNECTOR, SIRCS CONNECTOR	12-13
IO-149B/149C	VIDEO ANALOG OUT PROCESS, REF SIGNAL GEN, VIDEO OUT DRIVER	12-14
KY-336B	KEY SWITCH, FL DISPLAY/DRIVE	12-16
MB-713	MOTHER BOARD, REMOTE CONNECTOR	12-20
MS-43	DRUM/CAPSTAN MOTOR DRIVE, CAPSTAN FG AMP, TAPE TOP/END SENSOR AMP, REEL POSITION SENSOR, SV DATA MEMORY	12-22
PRE-39	PB DIGITAL PROCESS	12-26
PTC-84	THREAD/UNTHREAD END SENSOR, PINCH SOL/CLEAN SOL/DEW CONNECTION	12-26
PTC-85	TAPE TOP SENSOR	12-27
PTC-86	TAPE END SENSOR, TENSION SENSOR CONNECTION	12-27
PTC-87	TAPE TOP/END LED	12-27
PTC-88	THREADING FG SENSOR, THREADING MOTOR CONNECTION	12-28
RM-159	S REEL MOTOR/BRAKE SOL/FG SENSOR CONNECTION	12-28
RM-160	T REEL MOTOR/BRAKE SOL/FG SENSOR CONNECTION	12-28
RP-103	PB HEAD AMP, RF A/D	12-29
SDI-26A (DSBK-110/110P)	QSDI OUTPUT INTERFACE	12-30
SDI-28 (DSBK-100/100P)	SDI OUTPUT INTERFACE	12-34
SE-315	S REEL FG SENSOR	12-35
SE-361	T REEL FG SENSOR	12-35
SV-184	SERVO MAIN CONTROL	12-36
SY-241B	SYSTEM CONTROL	12-38
TC-90 (DSBK-130/130P)	EXTERNAL TIME CODE OUT	12-40
TR-93	TEN-REG ARM POSITION SENSOR	12-40

DSR-80/80P

BOARD NAME	CIRCUIT FUNCTION	PAGE
CC-75	CASSETTE COMPARTMENT DOWN 1/2/3 SENSOR CC UP/DOWN MOTOR CONNECTION	12-2
CC-76	CASSETTE IN 1/2/3 SENSOR	12-2
CP-276A	ANALOG VIDEO IN/OUT, TC IN/OUT, AUDIO MONITOR	12-3
CP-281/281J	ANALOG AUDIO IN/OUT, AES/EBU IN/OUT, BAL → UNBAL, AUDIO IN LEVEL SELECT	12-4
DA-119	AUDIO ANALOG/DIGITAL IN/OUT PROCESS	12-6
DV-15/15A	VIDEO DIGITAL IN/OUT PROCESS	12-8
FP-75	SUB PANEL MENU KEY/AUDIO MONITOR SWITCH, SYNC/SC PHASE ADJUST	12-13
HP-73	HEADPHONE VOLUME/CONNECTOR, SIRCS CONNECTOR	12-13
IO-149/149A	VIDEO ANALOG IN/OUT PROCESS, REF SIGNAL GEN, VIDEO IN/OUT DRIVER	12-14
KY-336	KEY SWITCH, AUDIO REC VOLUME, FL DISPLAY/DRIVE	12-16
MB-712	MOTHER BOARD, REMOTE CONNECTOR	12-18
MS-43	DRUM/CAPSTAN MOTOR DRIVE, CAPSTAN FG AMP, TAPE TOP/END SENSOR AMP, REEL POSITION SENSOR, SV DATA MEMORY	12-22
PRE-34	REC/PB DIGITAL PROCESS	12-24
PTC-84	THREAD/UNTHREAD END SENSOR, PINCH SOL/CLEAN SOL/DEW CONNECTION	12-26
PTC-85	TAPE TOP SENSOR	12-27
PTC-86	TAPE END SENSOR, TENSION SENSOR CONNECTION	12-27
PTC-87	TAPE TOP/END LED	12-27
PTC-88	THREADING FG SENSOR, THREADING MOTOR CONNECTION	12-28
RM-159	S REEL MOTOR/BRAKE SOL/FG SENSOR CONNECTION	12-28
RM-160	T REEL MOTOR/BRAKE SOL/FG SENSOR CONNECTION	12-28
RP-101	REC/PB HEAD AMP, RF A/D	12-25
SDI-26	QSDI INPUT/OUTPUT INTERFACE	12-30
SDI-27 (DSBK-120/120P)	SDI INPUT INTERFACE	12-33
SDI-28 (DSBK-100/100P) (DSBK-120/120P)	SDI OUTPUT INTERFACE	12-34
SE-315	S REEL FG SENSOR	12-35
SE-361	T REEL FG SENSOR	12-35
SV-184	SERVO MAIN CONTROL	12-36
SY-241	SYSTEM CONTROL	12-38
TC-90 (DSBK-130/130P)	EXTERNAL TIME CODE IN/OUT	12-40
TR-93	TEN-REG ARM POSITION SENSOR	12-40

 CC-75, CC-76

CC-75: CC DOWN SENSOR
CC-76: CAS IN SENSOR

CC-75 (1-662-920-11)

*: B SIDE

CN50	A1
CN51	A1
CN52	A1
PH1	A1
PH2	A1
PH3	A1

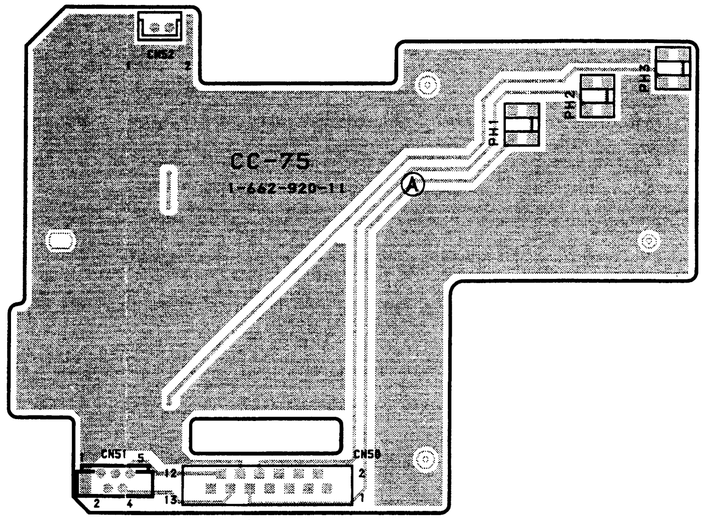

CC-75 -A SIDE-
SUFFIX : -11
MODEL DSR-80/80P/60/60P

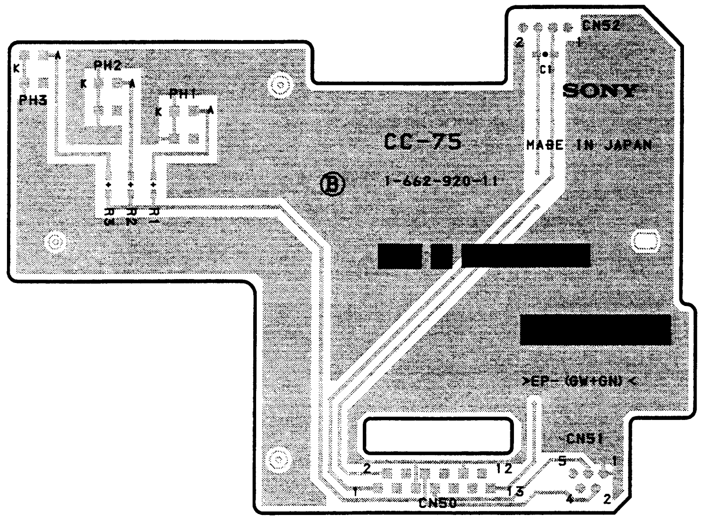

CC-75 -B SIDE-
SUFFIX : -11
MODEL DSR-80/80P/60/60P

CC-76 (1-662-921-11)

*: B SIDE

CN53	A1
PH1	A1
PH2	A1
PH3	A1

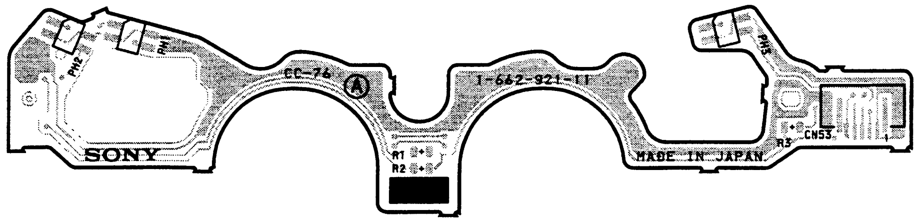

CC-76 -A SIDE-
SUFFIX : -11
MODEL DSR-80/80P/60/60P

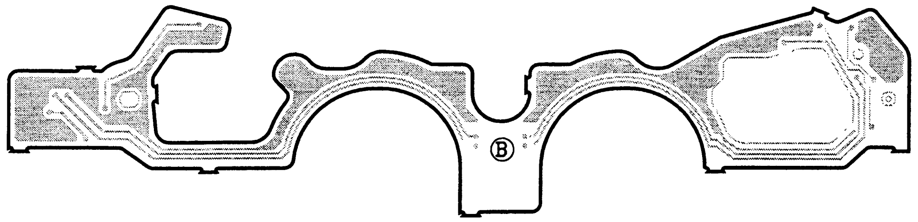

CC-76 -B SIDE-
SUFFIX : -11
MODEL DSR-80/80P/60/60P

CP-276A: VIDEO/TC CONNECTOR (DSR-80/80P)
CP-276B: VIDEO/TC CONNECTOR (DSR-60/60P)

CP-276B (1-662-888-11)

*: B SIDE

CN1	A5
CN3	D5
CN4	B6
CN6	D6
CN601	A6
CN602	B6
CN603	D6
FL4	D6
FL5	D6
FL6	D3
FL7	D4
FL8	D5
FL9	A5
FL10	B6
FL14	D1
FL15	D2
FL16	A3
Q2	* B2
Q3	* A2
S1	B2
S4	D4

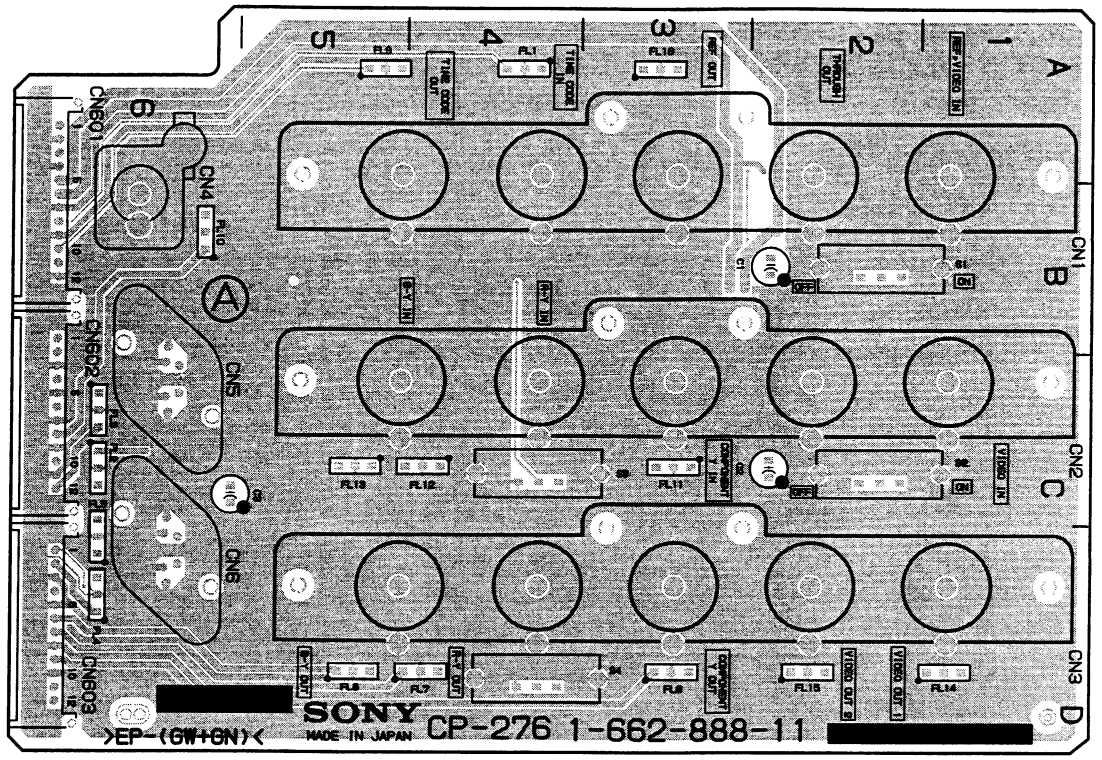

CP-276B -A SIDE-
SUFFIX : -11
MODEL DSR-60/60P

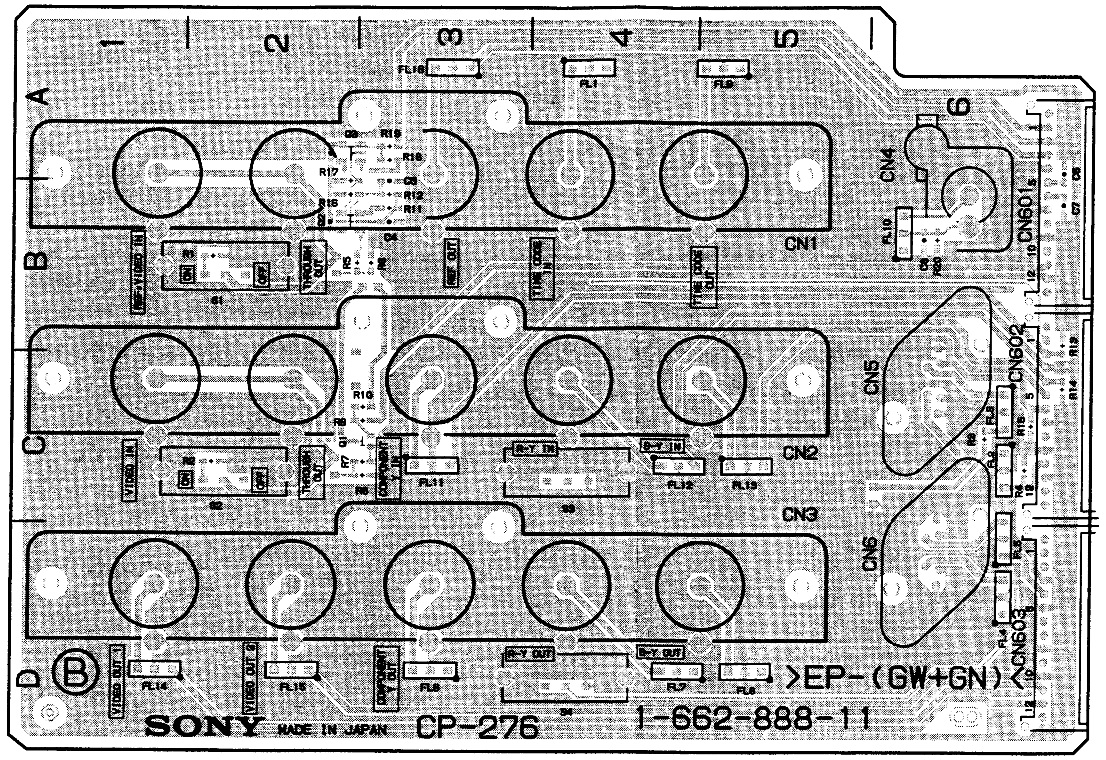

CP-276B -B SIDE-
SUFFIX : -11
MODEL DSR-60/60P

CP-276A/276B (1-662-888-12)

*:B SIDE

CN1	A5
CN2	C5(#1)
CN3	D5
CN4	B6
CN5	C6(#1)
CN6	D6
CN601	A6
CN602	B6
CN603	D6
FL1	A4(#1)
FL2	C6(#1)
FL3	C6(#1)
FL4	D6
FL5	D6
FL6	D3
FL7	D4
FL8	D5
FL9	A5
FL10	B6
FL11	C3(#1)
FL12	C4(#1)
FL13	C5(#1)
FL14	D1
FL15	D2
FL16	A3
Q1	*C3(#1)
Q2	*B2
Q3	*A2
S1	B2
S2	C2(#1)
S3	C4(#1)
S4	D4

#1: CP-276A

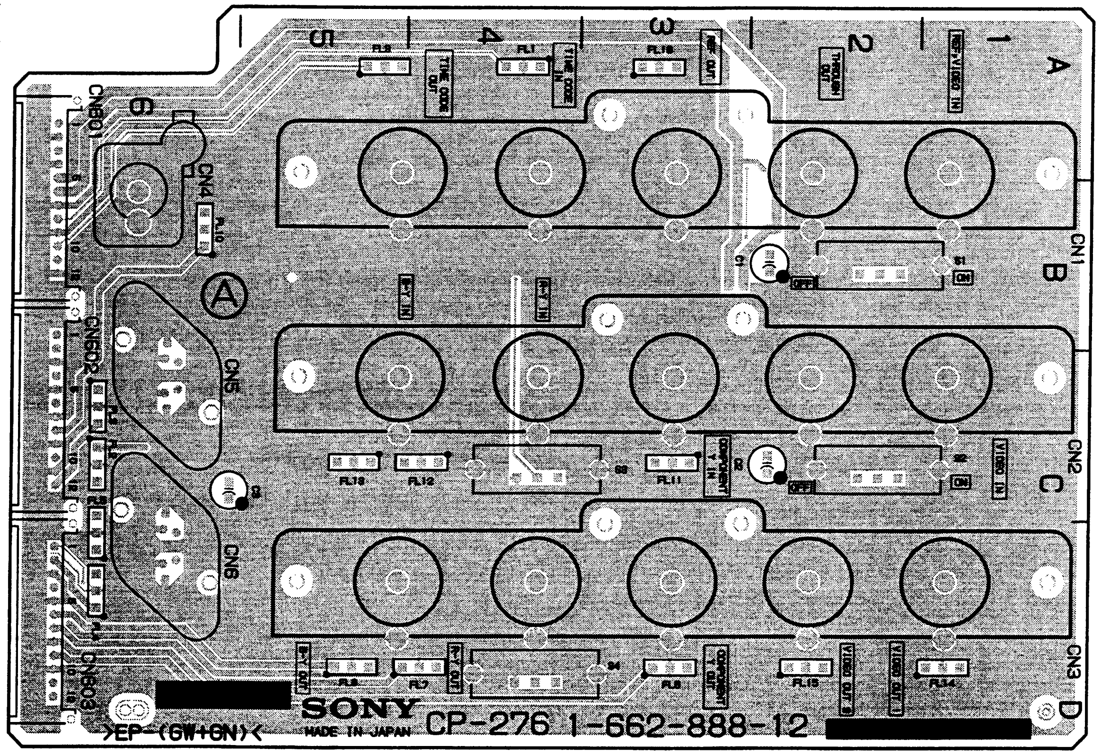

CP-276A/276B -A SIDE-
SUFFIX : -12
MODEL DSR-80/80P/60/60P

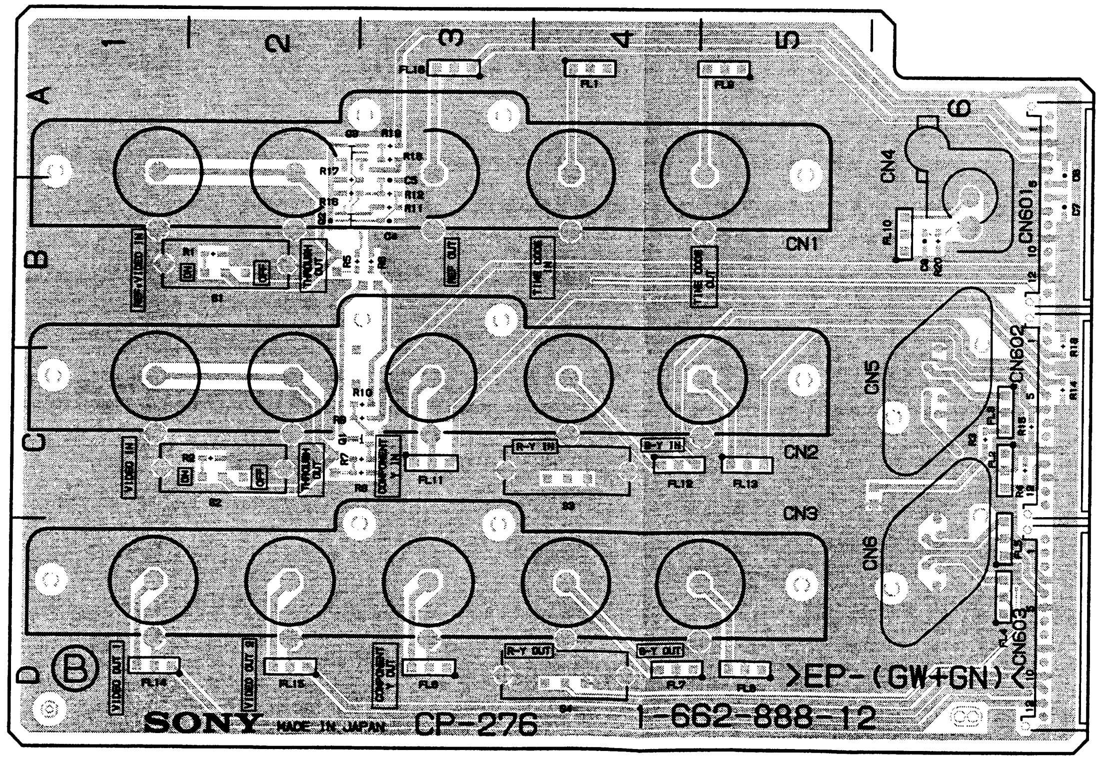

CP-276A/276B -B SIDE-
SUFFIX : -12
MODEL DSR-80/80P/60/60P

CP-281/281B/281C/281J

CP-281B/281C: ANALOG AUDIO OUT (DSR-60/60P)
CP-281/281J: ANALOG AUDIO IN/OUT (DSR-80/80P)

CP-281/281B/281C/281J (1-662-889-12)

*:B SIDE

CN21		A1 (#1, #2)
CN22		C1 (#1, #2)
CN23		A3 (#1, #2)
CN24		C3 (#1, #2)
CN25		A5
CN26		C5
CN604		A5 (#1, #2)
CN605		B5 (#1, #2)
CN606		D5
CN609		E4 (#1, #2)
D100	*	A3 (#1, #2)
D101	*	B3 (#1, #2)
D102	*	A3 (#1, #2)
D103	*	B3 (#1, #2)
D200	*	C3 (#1, #2)
D201	*	E3 (#1, #2)
D202	*	C3 (#1, #2)
D203	*	D3 (#1, #2)
FL1		D1 (#1, #2)
FL2		D1 (#1, #2)
FL3		D2 (#1, #2)
FL4		D2 (#1, #2)
IC100	*	A4 (#1, #2)
IC101	*	A4 (#1, #2)
IC102	*	A4 (#1, #2)
IC103	*	B4 (#1, #2)
IC200	*	C4 (#1, #2)
IC201	*	D4 (#1, #2)
IC202	*	C4 (#1, #2)
IC203	*	D4 (#1, #2)
S1		A2 (#1, #2)
S2		B2 (#1, #2)
S3		C2 (#1, #2)
S4		D2 (#1, #2)
S100		A3 (#1, #2)
S101		B3 (#1, #2)
S200		C3 (#1, #2)
S201		D3 (#1, #2)
T1		A2 (#1, #2)
T2		A1 (#1, #2)
T3		D1 (#1, #2)
T4		D2 (#1, #2)

#1: CP-281
#2: CP-281J

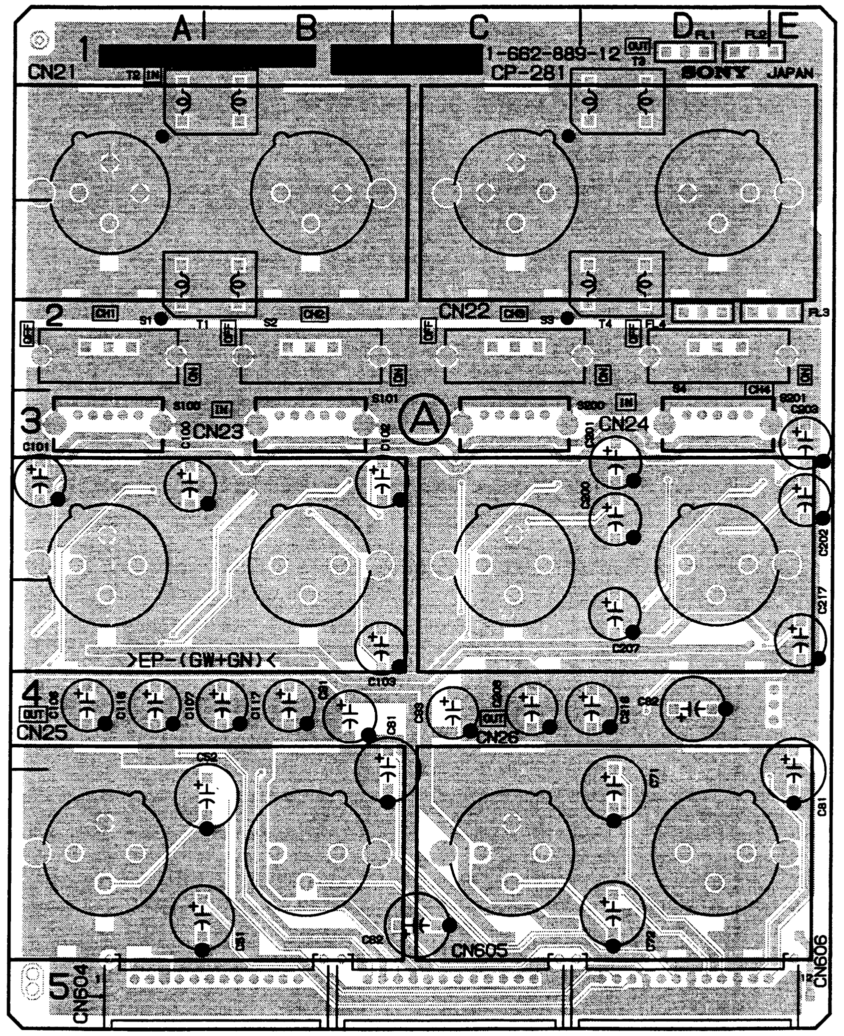

CP-281/281B/281C/281J -A SIDE-
SUFFIX : -12
MODEL DSR-80/80P/60/60P

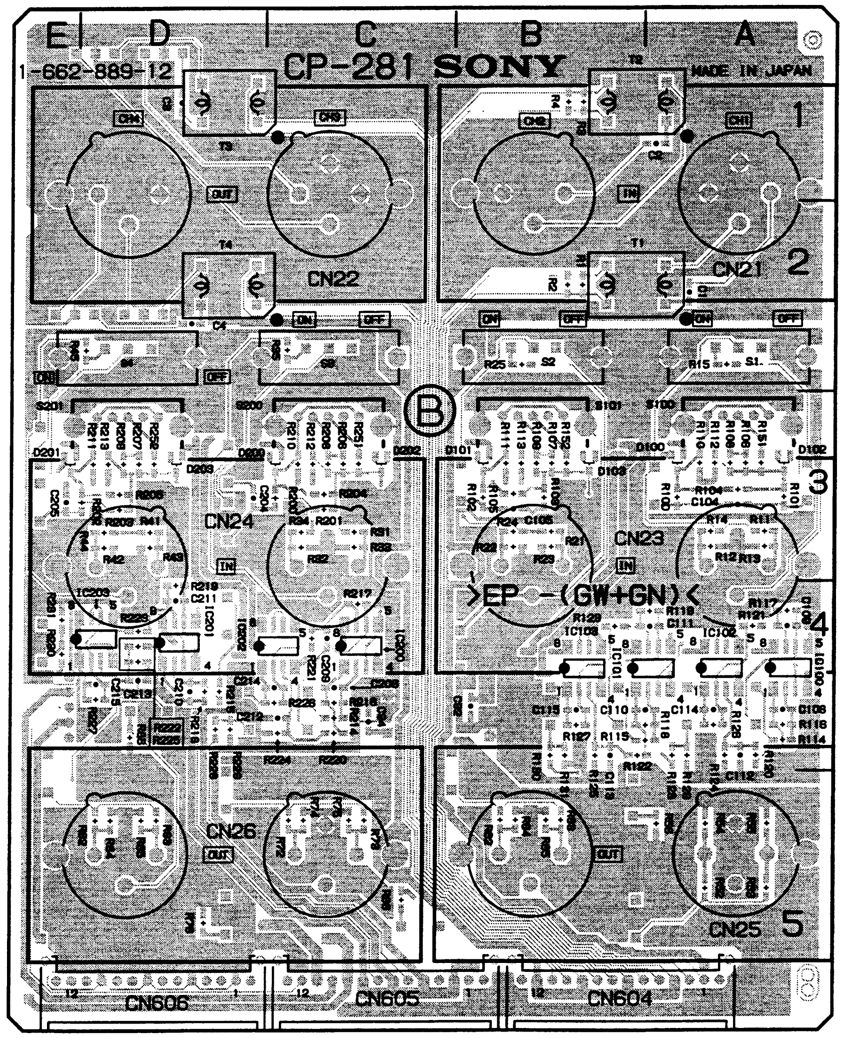

CP-281/281B/281C/281J -B SIDE-
SUFFIX : -12
MODEL DSR-80/80P/60/60P

12-4

DSR-60/60P

CP-281B/281C: ANALOG AUDIO OUT

CP-281B/281C (1-662-889-11)

*: B SIDE

CN25	A5
CN26	C5
CN606	D5

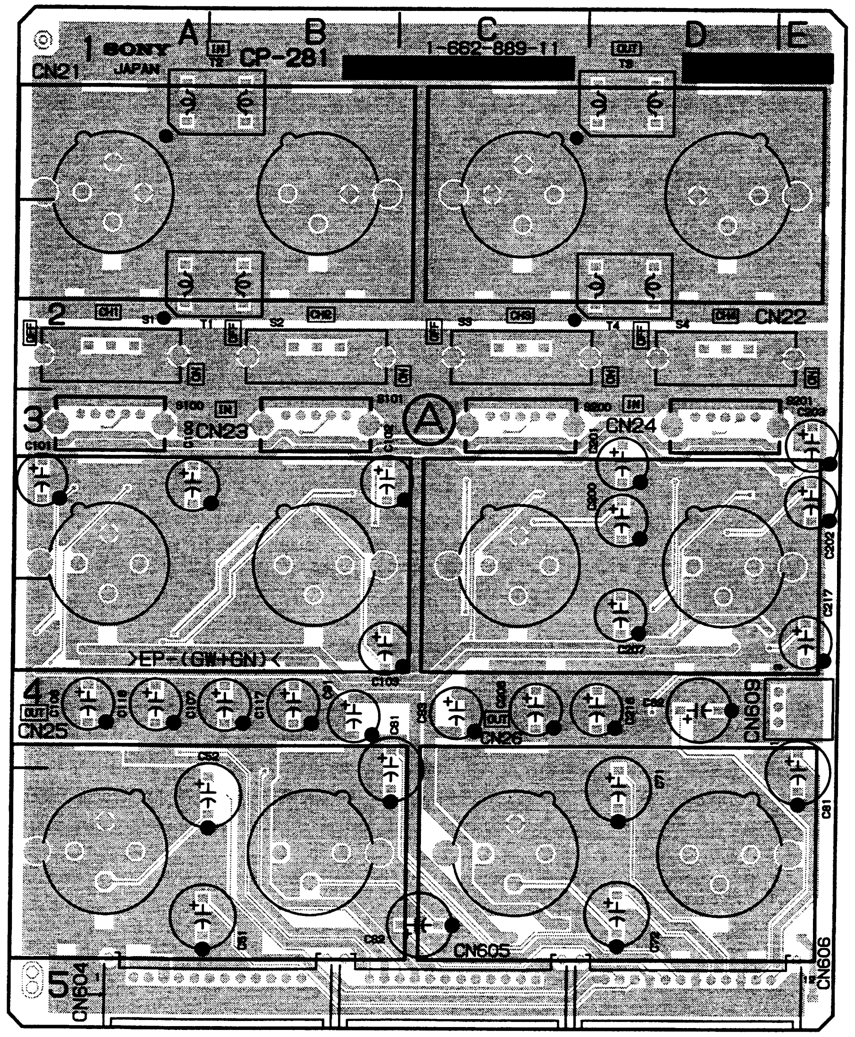

CP-281B/281C -A SIDE-
SUFFIX : -11
MODEL DSR-60/60P

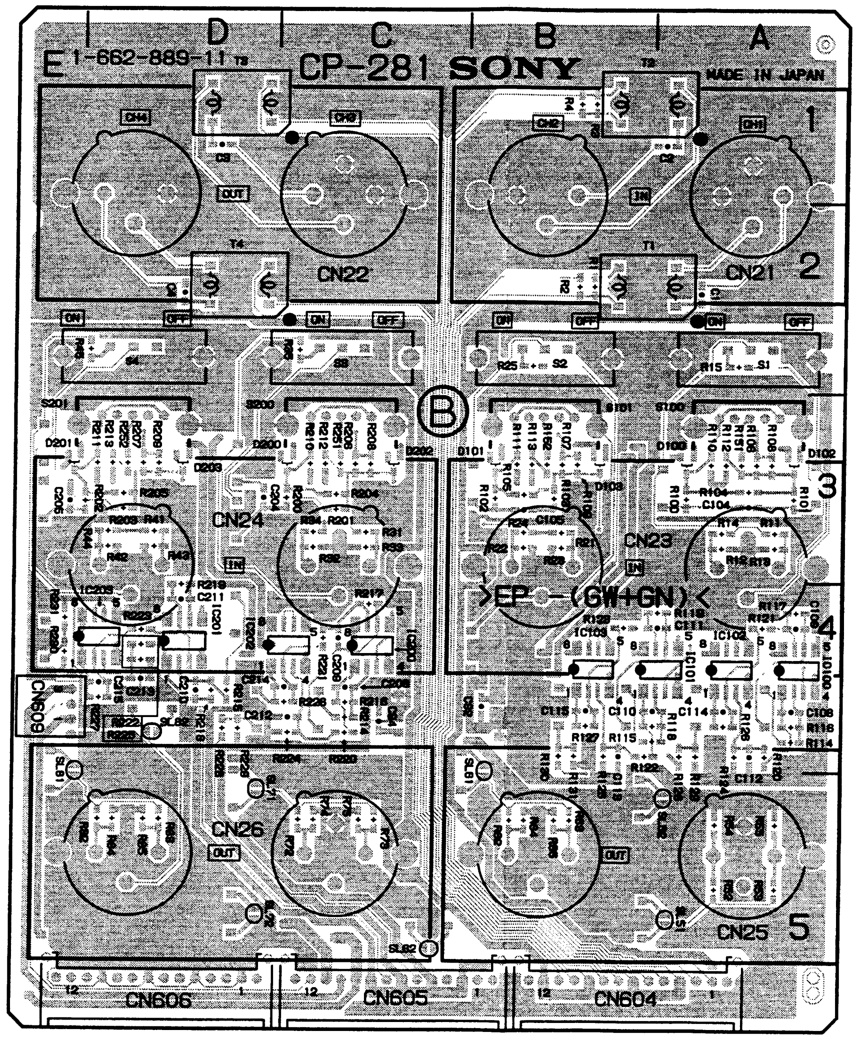

CP-281B/281C -B SIDE-
SUFFIX : -11
MODEL DSR-60/60P

DA-119: AUDIO ANALOG/DIGITAL IN/OUT PROCESS

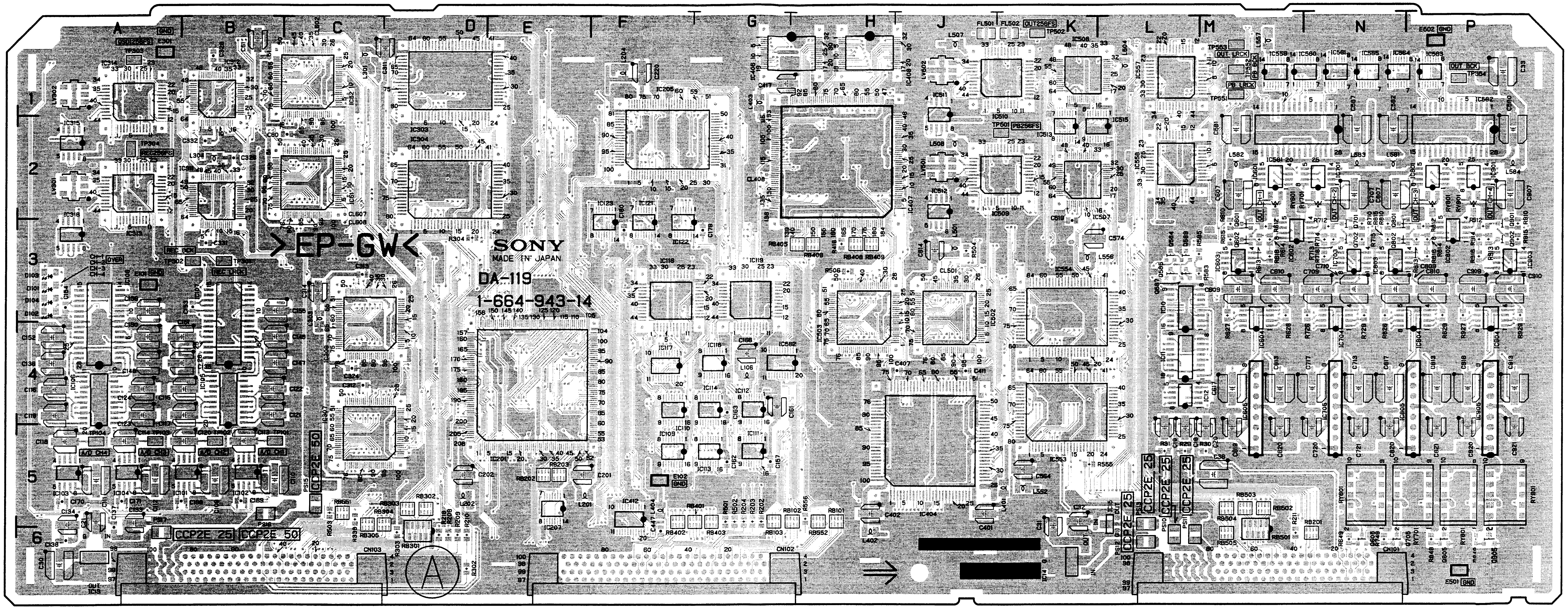

DA-119 -A SIDE-

SUFFIX :-14

MODEL DSR-80/80P

DA-119 (1-664-943-14)

*: B SIDE

CN101	N6
CN102	G6
CN103	C6
D101	A3
D102	A3
D103	A3
D104	A3
D301	* A1
D302	* A2
D501	* J1
D502	* J2
D601	* N5
D602	* N5
D603	* N5
D701	* P5
D702	* P5
D703	* P5
D801	* P5
D802	* P5
D803	* P5
D901	* P5
D902	* P5
D903	* P5
E101	A3
E102	F5
E301	A1
E501	P6
E502	P1
FL501	J1
FL502	K1
IC10	L3
IC11	L4
IC12	L4
IC13	A6
IC14	K6
IC15	L5
IC51	C2
IC52	C1
IC53	* C2
IC54	* C1
IC55	* B1
IC56	* B1
IC101	B5
IC102	B5
IC103	A5
IC104	A5
IC105	B4
IC106	A4
IC107	B4
IC108	A4
IC109	F5
IC110	F4
IC111	G5
IC112	G4
IC113	G5
IC114	G4
IC116	G4
IC117	F4
IC118	F3
IC119	G3
IC120	* F3
IC121	F3
IC122	F3
IC123	F3
IC124	* F3
IC125	* F3
IC201	E4
IC202	* F1
IC203	* E4
IC204	* E4
IC205	F2
IC206	* F2
IC207	E5
IC301	* C2
IC302	* E2
IC303	D1
IC304	D2
IC305	* D1
IC306	* D2
IC307	C5
IC308	C4
IC309	* C5
IC310	* C4
IC311	B2
IC312	B1
IC313	A2
IC314	A1
IC315	A2
IC316	A3
IC317	* E3
IC318	* B1
IC401	* G2
IC403	* J4
IC404	J5
IC406	H1
IC407	H2
IC408	H1
IC412	F5
IC501	* H4
IC502	J3
IC503	H3
IC504	* J3
IC505	* H3
IC507	K2
IC508	K1
IC509	K2
IC510	K1
IC511	J1
IC512	J2
IC513	K2
IC514	* K2
IC515	K2
IC551	* L2
IC552	* K4
IC553	K4
IC554	K3
IC555	* K5
IC556	* K4
IC557	L1
IC558	L2
IC559	M1
IC560	N1
IC561	N1
IC562	G4
IC563	P1
IC564	N1
IC565	N1
IC581	M2
IC582	P2
IC601	M2
IC602	M3
IC603	M3
IC604	M3
IC605	M5
IC701	N2
IC703	N3
IC704	N3
IC705	N5
IC801	P2
IC802	P3
IC803	N3
IC804	P3
IC805	P5
IC901	P2
IC903	P3
IC904	P3
IC905	P5
LV301	A2
LV302	A1
LV501	J2
LV502	J1
L51	* B1
L101	* A4
L102	* A4
L103	* B3
L104	* A4
L105	* H4
L106	G4
L201	E5
L202	D5
L204	F1
L301	C1
L303	C3
L304	B2
L305	* B1
L308	* A1
L309	* A2
L312	* C2
L313	* E3
L401	K5
L402	H6
L403	G1
L404	F5
L501	J3
L503	* L2
L504	L1
L507	J1
L508	J2
L552	K5
L554	* L1
L555	* L2
L556	K3
L557	M1
L558	* G4
L581	N2
L582	M2
L583	N2
L584	P2
PS10	L6
PS11	L6
PS12	L6
PS13	L5
PS15	C5
PS16	B5
PS17	A6
Q10	* L3
Q11	* L4
Q12	* L4
Q13	* L5
Q14	* M4
Q15	* L5
Q16	* L5
Q17	* M5
Q18	* L5
Q19	* M5
Q101	* A5
Q102	* B5
Q103	* A5
Q104	* A5
Q105	* B5
Q106	* B5
Q107	* A5
Q108	* A5
Q581	* L3
Q582	* L3
Q583	* L3
Q584	L3
Q585	L3
Q586	* L3
Q587	L3
Q588	* L3
Q589	L3
Q590	* N5
Q601	M3
Q602	M3
Q603	* M3
Q604	* M3
Q605	N6
Q701	N3
Q702	N3
Q703	* N3
Q704	* N3
Q705	N6
Q801	N3
Q802	N3
Q803	* P3
Q804	* P3
Q805	P6
Q901	P3
Q902	P3
Q903	* P3
Q904	* P3
Q905	P6
RB101	H5
RB102	H5
RB103	G5
RB201	N6
RB202	E5
RB203	E5
RB301	D6
RB302	D5
RB303	D5
RB304	D5
RB305	C5
RB401	G5
RB402	F5
RB403	G5
RB405	H3
RB406	H3
RB408	H3
RB409	H3
RB501	M6
RB502	M5
RB503	M5
RB504	M5
RB505	M6
RB551	C5
RB552	H5
RV601	M2
RV701	N2
RV801	P2
RV901	P2
RY601	N5
RY701	P5
RY801	P5
RY901	P5
TP101	B5
TP102	B5
TP103	A5
TP104	A5
TP301	B3
TP302	B3
TP303	A1
TP304	A2
TP501	K2
TP502	K1
TP551	M1
TP552	M1
TP553	M1
TP554	P1

DSR-80/80P

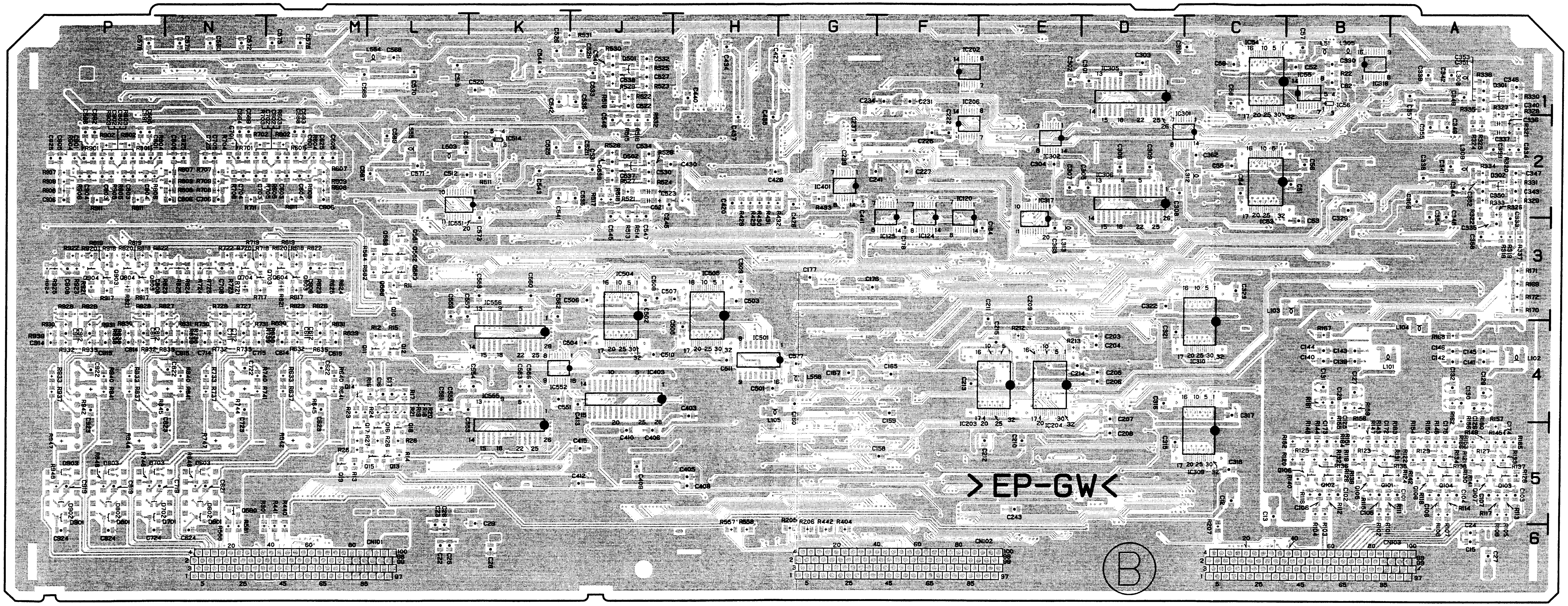

DA-119 -B SIDE-
SUFFIX : -14
MODEL DSR-80/80P

DA-119: AUDIO ANALOG/DIGITAL IN/OUT PROCESS

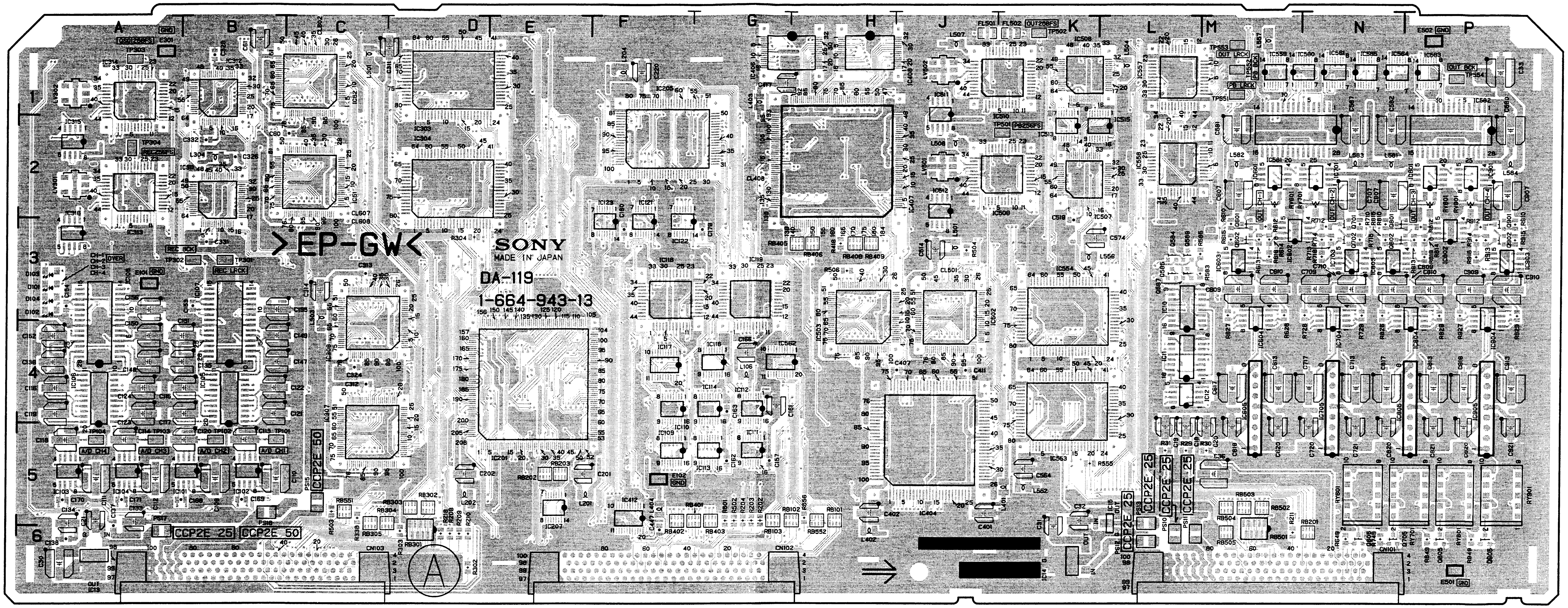

DA-119 -A SIDE-
SUFFIX : -13
MODEL DSR-80/80P

DA-119 (1-664-943-13)

*: B SIDE

CN101	N6	E102	F5	IC107	B4	IC302	* E2	IC503	H3	IC565	N1	L51	* B1	L508	J2	Q16	* L5	Q605	N6	RB304	D5	TP101	B5
CN102	G6	E301	A1	IC108	A4	IC303	D1	IC504	* J3	IC581	M2	L101	* A4	L552	K5	Q17	* M5	Q701	N3	RB305	C5	TP102	B5
CN103	C6	E501	P6	IC109	F5	IC304	D2	IC505	* H3	IC582	P2	L102	* A4	L554	* L1	Q18	* L5	Q702	N3	RB401	G5	TP103	A5
		E502	P1	IC110	F4	IC305	* D1	IC507	K2	IC601	M2	L103	* B3	L555	* L2	Q19	* M5	Q703	* N3	RB402	F5	TP104	A5
D101	A3			IC111	G5	IC306	* D2	IC508	K1	IC602	M3	L104	* A4	L556	K3	Q101	* A5	Q704	* N3	RB403	G5	TP301	B3
D102	A3	FL501	J1	IC112	G4	IC307	C5	IC509	K2	IC603	M3	L105	* H4	L557	M1	Q102	* B5	Q705	N6	RB405	H3	TP302	B3
D103	A3	FL502	K1	IC113	G5	IC308	C4	IC510	K1	IC604	M3	L106	G4	L558	* G4	Q103	* A5	Q801	N3	RB406	H3	TP303	A1
D104	A3			IC114	G4	IC309	* C5	IC511	J1	IC605	M5	L201	E5	L581	N2	Q104	* A5	Q802	N3	RB408	H3	TP304	A2
D301	* A1	IC10	L3	IC116	G4	IC310	* C4	IC512	J2	IC701	N2	L202	D5	L582	M2	Q105	* B5	Q803	* P3	RB409	H3	TP501	K2
D302	* A2	IC11	L4	IC117	F4	IC311	B2	IC513	K2	IC703	N3	L204	F1	L583	N2	Q106	* B5	Q804	* P3	RB501	M6	TP502	K1
D501	* J1	IC12	L4	IC118	F3	IC312	B1	IC514	* K2	IC704	N3	L301	C1	L584	P2	Q107	* A5	Q805	P6	RB502	M5	TP551	M1
D502	* J2	IC13	A6	IC119	G3	IC313	A2	IC515	K2	IC705	N5	L303	C3			Q108	* A5	Q901	P3	RB503	M5	TP552	M1
D601	* N5	IC14	K6	IC120	* F3	IC314	A1	IC551	* L2	IC801	P2	L304	B2	PS10	L6	Q581	* L3	Q902	P3	RB504	M5	TP553	M1
D602	* N5	IC15	L5	IC121	F3	IC315	A2	IC552	* K4	IC802	P3	L305	* B1	PS11	L6	Q582	* L3	Q903	* P3	RB505	M6	TP554	P1
D603	* N5	IC51	C2	IC122	F3	IC316	A3	IC553	K4	IC803	N3	L308	* A1	PS12	L6	Q583	* L3	Q904	* P3	RB551	C5		
D701	* P5	IC52	C1	IC123	F3	IC317	* E3	IC554	K3	IC804	P3	L309	* A2	PS13	L5	Q584	L3	Q905	P6	RB552	H5		
D702	* P5	IC53	* C2	IC124	* F3	IC318	* B1	IC555	* K5	IC805	P5	L312	* C2	PS15	C5	Q585	L3						
D703	* P5	IC54	* C1	IC125	* F3	IC401	* G2	IC556	* K4	IC901	P2	L313	* E3	PS16	B5	Q586	* L3	RB101	H5	RV601	M2		
D801	* P5	IC55	* B1	IC201	E4	IC403	* J4	IC557	L1	IC903	P3	L401	K5	PS17	A6	Q587	L3	RB102	H5	RV701	N2		
D802	* P5	IC56	* B1	IC202	* F1	IC404	J5	IC558	L2	IC904	P3	L402	H6			Q588	* L3	RB103	G5	RV801	P2		
D803	* P5	IC101	B5	IC203	* E4	IC406	H1	IC559	M1	IC905	P5	L403	G1	Q10	* L3	Q589	L3	RB201	N6	RV901	P2		
D901	* P5	IC102	B5	IC204	* E4	IC407	H2	IC560	N1			L404	F5	Q11	* L4	Q590	* N5	RB202	E5				
D902	* P5	IC103	A5	IC205	F2	IC408	H1	IC561	N1	LV301	A2	L501	J3	Q12	* L4	Q601	M3	RB203	E5	RY601	N5		
D903	* P5	IC104	A5	IC206	* F2	IC412	F5	IC562	G4	LV302	A1	L503	* L2	Q13	* L5	Q602	M3	RB301	D6	RY701	P5		
		IC105	B4	IC207	E5	IC501	* H4	IC563	P1	LV501	J2	L504	L1	Q14	* M4	Q603	* M3	RB302	D5	RY801	P5		
E101	A3	IC106	A4	IC301	* C2	IC502	J3	IC564	N1	LV502	J1	L507	J1	Q15	* L5	Q604	* M3	RB303	D5	RY901	P5		

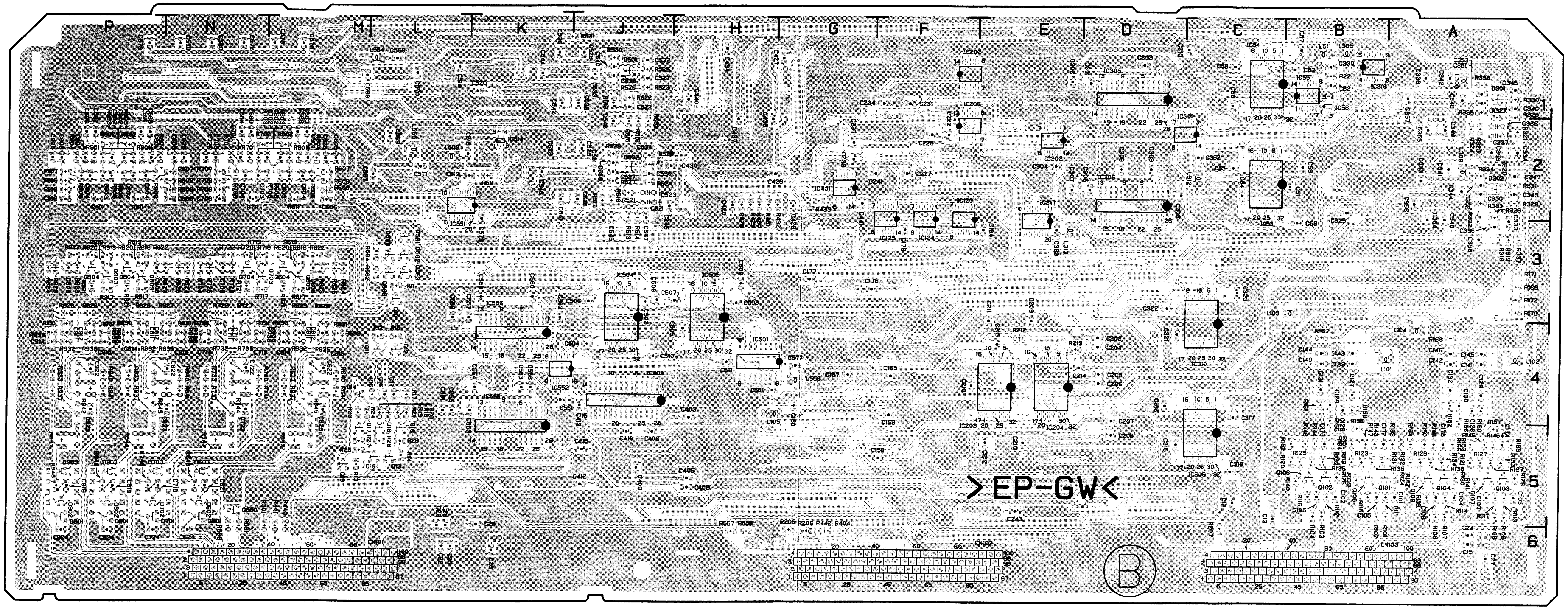

DA-119 **-B SIDE-**

SUFFIX : -13

MODEL DSR-80/80P

DSR-80/80P

DA-119: AUDIO ANALOG/DIGITAL IN/OUT PROCESS

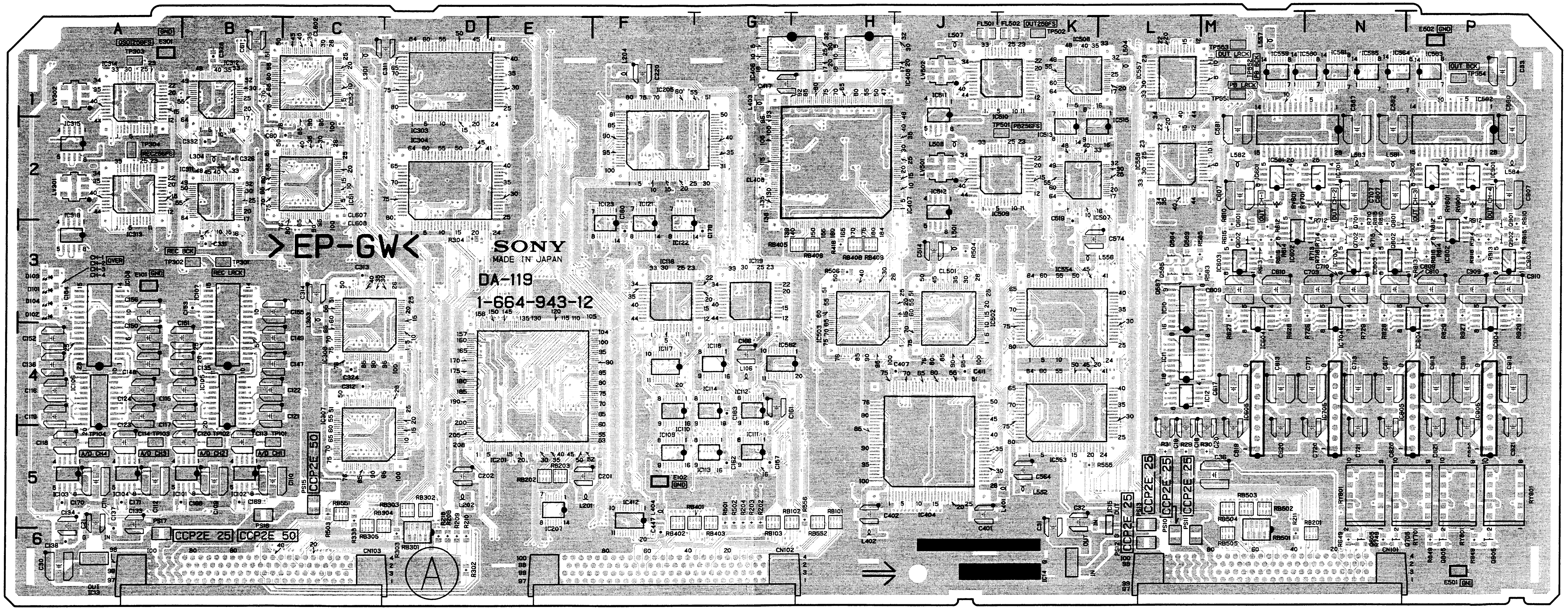

DA-119 -A SIDE-
SUFFIX: -12
MODELDSR-80/80P

DA-119 (1-664-943-12)

*: B SIDE

CN101	N6
CN102	G6
CN103	C6
D101	A3
D102	A3
D103	A3
D104	A3
D301	* A1
D302	* A2
D501	* J1
D502	* J2
D601	* N5
D602	* N5
D603	* N5
D701	* P5
D702	* P5
D703	* P5
D801	* P5
D802	* P5
D803	* P5
D901	* P5
D902	* P5
D903	* P5
E101	A3
E102	F5
E301	A1
E501	P6
E502	P1
FL501	J1
FL502	K1
IC10	L3
IC11	L4
IC12	L4
IC13	A6
IC14	K6
IC15	L5
IC51	C2
IC52	C1
IC53	* C2
IC54	* C1
IC55	* B1
IC56	* B1
IC101	B5
IC102	B5
IC103	A5
IC104	A5
IC105	B4
IC106	A4
IC107	B4
IC108	A4
IC109	F5
IC110	F4
IC111	G5
IC112	G4
IC113	G5
IC114	G4
IC116	G4
IC117	F4
IC118	F3
IC119	G3
IC120	* F3
IC121	F3
IC122	F3
IC123	F3
IC124	* F3
IC125	* F3
IC201	E4
IC202	* F1
IC203	* E4
IC204	* E4
IC205	F2
IC206	* F2
IC207	E5
IC301	* C2
IC302	* E2
IC303	D1
IC304	D2
IC305	* D1
IC306	* D2
IC307	C5
IC308	C4
IC309	* C5
IC310	* C4
IC311	B2
IC312	B1
IC313	A2
IC314	A1
IC315	A2
IC316	A3
IC317	* E3
IC318	* B1
IC401	* G2
IC403	* J4
IC404	J5
IC406	H1
IC407	H2
IC408	H1
IC412	F5
IC501	* H4
IC502	J3
IC503	H3
IC504	* J3
IC505	* H3
IC507	K2
IC508	K1
IC509	K2
IC510	K1
IC511	J1
IC512	J2
IC513	K2
IC514	* K2
IC515	K2
IC551	* L2
IC552	* K4
IC553	K4
IC554	K3
IC555	* K5
IC556	* K4
IC557	L1
IC558	L2
IC559	M1
IC560	N1
IC561	N1
IC562	G4
IC563	P1
IC564	N1
IC565	N1
IC581	M2
IC582	P2
IC601	M2
IC602	M3
IC603	M3
IC604	M3
IC605	M5
IC701	N2
IC703	N3
IC704	N3
IC705	N5
IC801	P2
IC802	P3
IC803	N3
IC804	P3
IC805	P5
IC901	P2
IC903	P3
IC904	P3
IC905	P5
LV301	A2
LV302	A1
LV501	J2
LV502	J1
L51	* B1
L101	* A4
L102	* A4
L103	* B3
L104	* A4
L105	* H4
L106	G4
L201	E5
L202	D5
L204	F1
L301	C1
L303	C3
L304	B2
L305	* B1
L308	* A1
L309	* A2
L312	* C2
L313	* E3
L401	K5
L402	H6
L403	G1
L404	F5
L501	J3
L503	* L2
L504	L1
L507	J1
L508	J2
L552	K5
L554	* L1
L555	* L2
L556	K3
L557	M1
L558	* G4
L581	N2
L582	M2
L583	N2
L584	P2
PS10	L6
PS11	L6
PS12	L6
PS13	L5
PS15	C5
PS16	B5
PS17	A6
Q10	* L3
Q11	* L4
Q12	* L4
Q13	* L5
Q14	* M4
Q15	* L5
Q16	* L5
Q17	* M5
Q18	* L5
Q19	* M5
Q101	* A5
Q102	* B5
Q103	* A5
Q104	* A5
Q105	* B5
Q106	* B5
Q107	* A5
Q108	* A5
Q581	* L3
Q582	* L3
Q583	* L3
Q584	L3
Q585	L3
Q586	* L3
Q587	L3
Q588	* L3
Q589	L3
Q590	* N5
Q601	M3
Q602	M3
Q603	* M3
Q604	* M3
Q605	N6
Q701	N3
Q702	N3
Q703	* N3
Q704	* N3
Q705	N6
Q801	N3
Q802	N3
Q803	* P3
Q804	* P3
Q805	P6
Q901	P3
Q902	P3
Q903	* P3
Q904	* P3
Q905	P6
RB101	H5
RB102	H5
RB103	G5
RB201	N6
RB202	E5
RB203	E5
RB301	D6
RB302	D5
RB303	D5
RB304	D5
RB305	C5
RB401	G5
RB402	F5
RB403	G5
RB405	H3
RB406	H3
RB408	H3
RB409	H3
RB501	M6
RB502	M5
RB503	M5
RB504	M5
RB505	M6
RB551	C5
RB552	H5
RV601	M2
RV701	N2
RV801	P2
RV901	P2
RY601	N5
RY701	P5
RY801	P5
RY901	P5
TP101	B5
TP102	B5
TP103	A5
TP104	A5
TP301	B3
TP302	B3
TP303	A1
TP304	A2
TP501	K2
TP502	K1
TP551	M1
TP552	M1
TP553	M1
TP554	P1

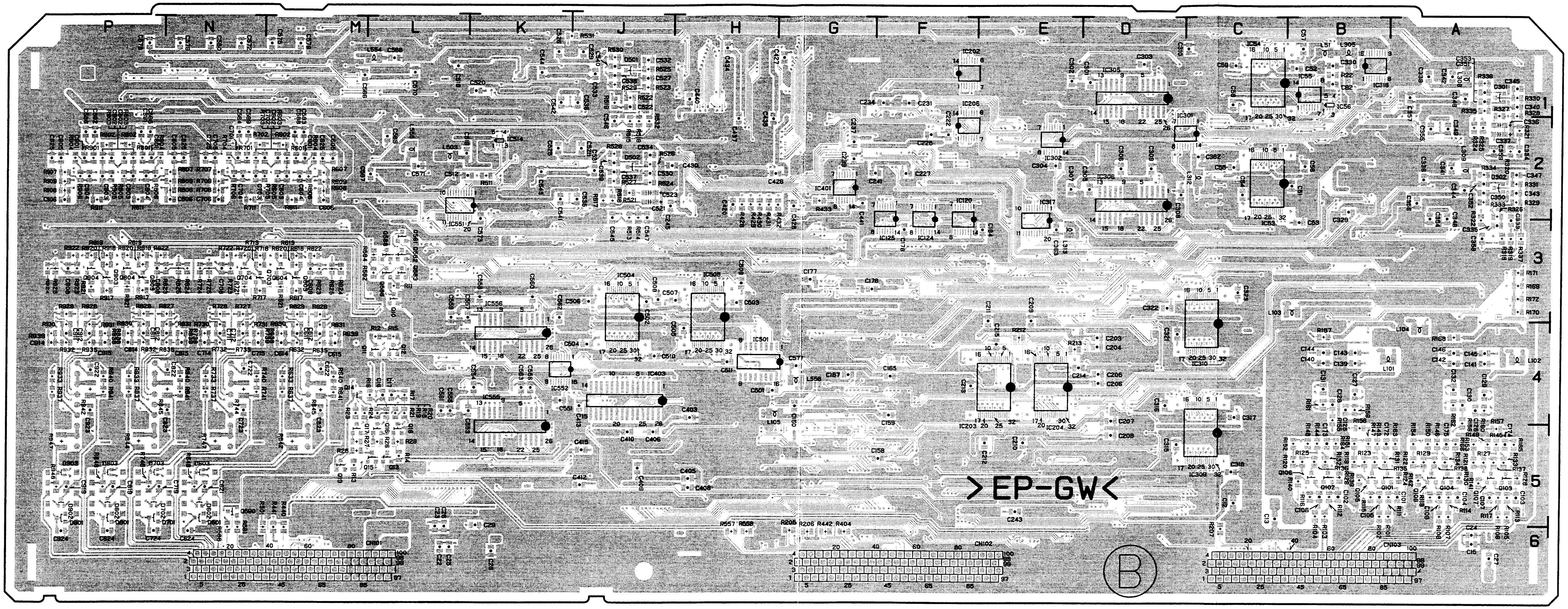

DA-119 -B SIDE-

SUFFIX : -12

MODEL DSR-80/80P

DSR-80/80P

DA-119: AUDIO ANALOG/DIGITAL IN/OUT PROCESS

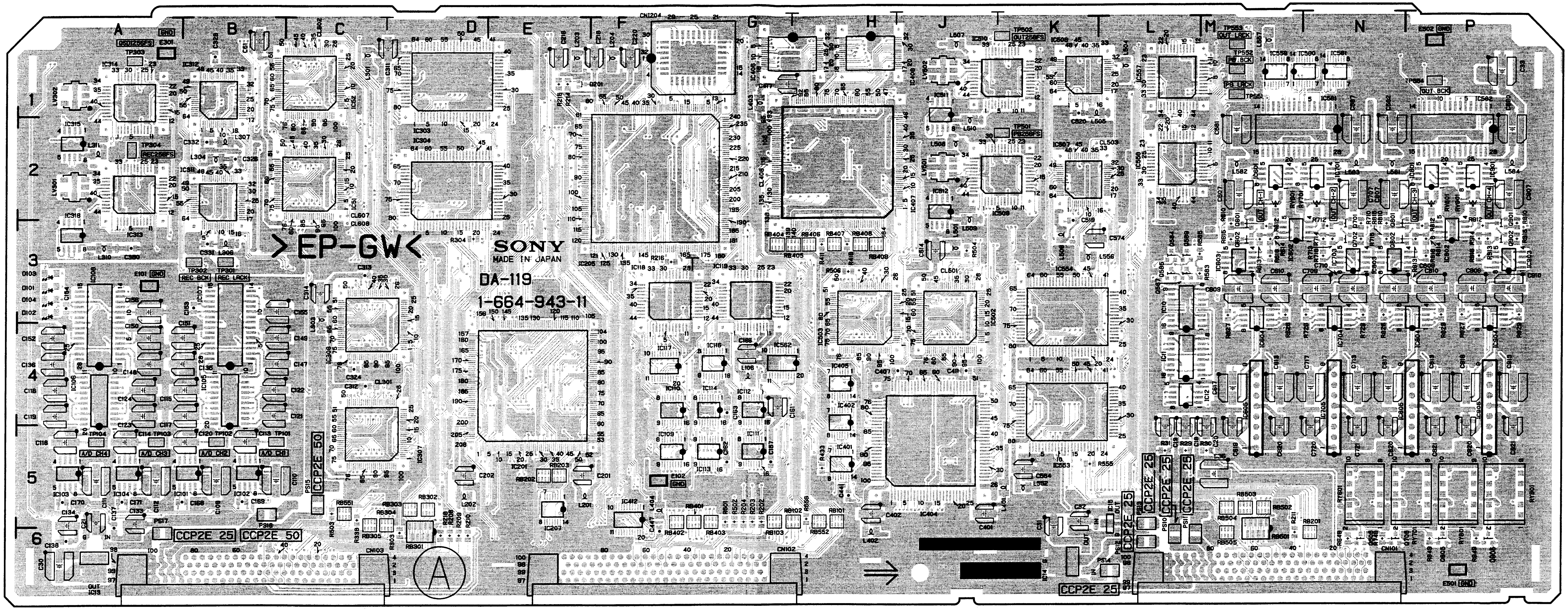

DA-119 -A SIDE-
SUFFIX : -11
MODEL DSR-80/80P

DA-119 (1-664-943-11)

*: B SIDE

CNI204	G1	D903	* P5	IC109	F5	IC311	B2	IC509	K2	IC705	N5	L204	F1	L551	* K4	Q16	* L5	Q605	N6	RB304	D5	RY701	P5
				IC110	F4	IC312	B1	IC510	K1	IC801	P2	L301	C1	L552	K5	Q17	* M5	Q701	N3	RB305	C5	RY801	P5
CN101	N6	E101	A3	IC111	G5	IC313	A2	IC511	J1	IC802	P3	L303	C3	L554	* L1	Q18	* L5	Q702	N3	RB401	G5	RY901	P5
CN102	G6	E102	F5	IC112	G4	IC314	A1	IC512	J2	IC803	N3	L304	B2	L555	* L2	Q19	* M5	Q703	* N3	RB402	F5		
CN103	C6	E301	A1	IC113	G5	IC315	A2	IC551	* L2	IC804	P3	L305	* B1	L556	K3	Q101	* A5	Q704	* N3	RB403	G5	TP101	B5
		E501	P6	IC114	G4	IC316	A3	IC552	* K4	IC805	P5	L306	B3	L557	M1	Q102	* B5	Q705	N6	RB404	G3	TP102	B5
D101	A3	E502	P1	IC116	G4	IC317	* E3	IC553	K4	IC901	P2	L307	B2	L558	* G4	Q103	* A5	Q801	N3	RB405	H3	TP103	A5
D102	A3			IC117	F4	IC401	H5	IC554	K3	IC903	P3	L308	* A1	L581	N2	Q104	* A5	Q802	N3	RB406	H3	TP104	A5
D103	A3	IC10	L3	IC118	F3	IC402	H4	IC555	* K5	IC904	P3	L309	* A2	L582	M2	Q105	* B5	Q803	* P3	RB407	H3	TP301	B3
D104	A3	IC11	L4	IC119	G3	IC403	* J4	IC556	* K4	IC905	P5	L310	A3	L583	N2	Q106	* B5	Q804	* P3	RB408	H3	TP302	B3
D201	E1	IC12	L4	IC201	E4	IC404	J5	IC557	L1			L311	A2	L584	P2	Q107	* A5	Q805	P6	RB409	H3	TP303	A1
D301	* A1	IC13	A6	IC202	* E4	IC405	H4	IC558	L2	LV301	A2	L312	* C2			Q108	* A5	Q901	P3	RB410	* H2	TP304	A2
D302	* A2	IC14	K6	IC203	* E4	IC406	H1	IC559	M1	LV302	A1	L313	* E3	PS10	L6	Q581	* L3	Q902	P3	RB501	M6	TP501	K2
D501	* J1	IC15	L5	IC205	F2	IC407	H2	IC560	N1	LV501	J2	L401	K5	PS11	L6	Q582	* L3	Q903	* P3	RB502	M5	TP502	K1
D502	* J2	IC51	C2	IC206	* F2	IC408	H1	IC561	N1	LV502	J1	L402	H6	PS12	L6	Q583	* L3	Q904	* P3	RB503	M5	TP551	M1
D601	* N5	IC52	C1	IC207	E5	IC409	* H5	IC562	G4			L403	G1	PS13	L5	Q584	L3	Q905	P6	RB504	M5	TP552	M1
D602	* N5	IC53	* C2	IC301	* C2	IC410	* H5	IC581	M2	L51	* B1	L404	F5	PS15	C5	Q585	L3			RB505	M6	TP553	M1
D603	* N5	IC54	* C1	IC302	* E2	IC411	* J5	IC582	P2	L101	* A4	L501	J3	PS16	B5	Q586	* L3	RB101	H5	RB551	C5	TP554	P1
D701	* P5	IC101	B5	IC303	D1	IC412	F5	IC601	M2	L102	* A4	L503	* L2	PS17	A6	Q587	L3	RB102	H5	RB552	H5		
D702	* P5	IC102	B5	IC304	D2	IC501	* H4	IC602	M3	L103	* B3	L504	L1			Q588	* L3	RB103	G5				
D703	* P5	IC103	A5	IC305	* D1	IC502	J3	IC603	M3	L104	* A4	L505	K1	Q10	* L3	Q589	L3	RB201	N6	RV601	M2		
D801	* P5	IC104	A5	IC306	* D2	IC503	H3	IC604	M3	L105	* H4	L506	K3	Q11	* L4	Q590	* N5	RB202	E5	RV701	N2		
D802	* P5	IC105	B4	IC307	C5	IC504	* J3	IC605	M5	L106	G4	L507	J1	Q12	* L4	Q601	M3	RB203	E5	RV801	P2		
D803	* P5	IC106	A4	IC308	C4	IC505	* H3	IC701	N2	L201	E5	L508	J2	Q13	* L5	Q602	M3	RB301	D6	RV901	P2		
D901	* P5	IC107	B4	IC309	* C5	IC507	K2	IC703	N3	L202	D5	L509	J3	Q14	* M4	Q603	* M3	RB302	D5				
D902	* P5	IC108	A4	IC310	* C4	IC508	K1	IC704	N3	L203	E1	L510	J2	Q15	* L5	Q604	* M3	RB303	D5	RY601	N5		

DSR-80/80P

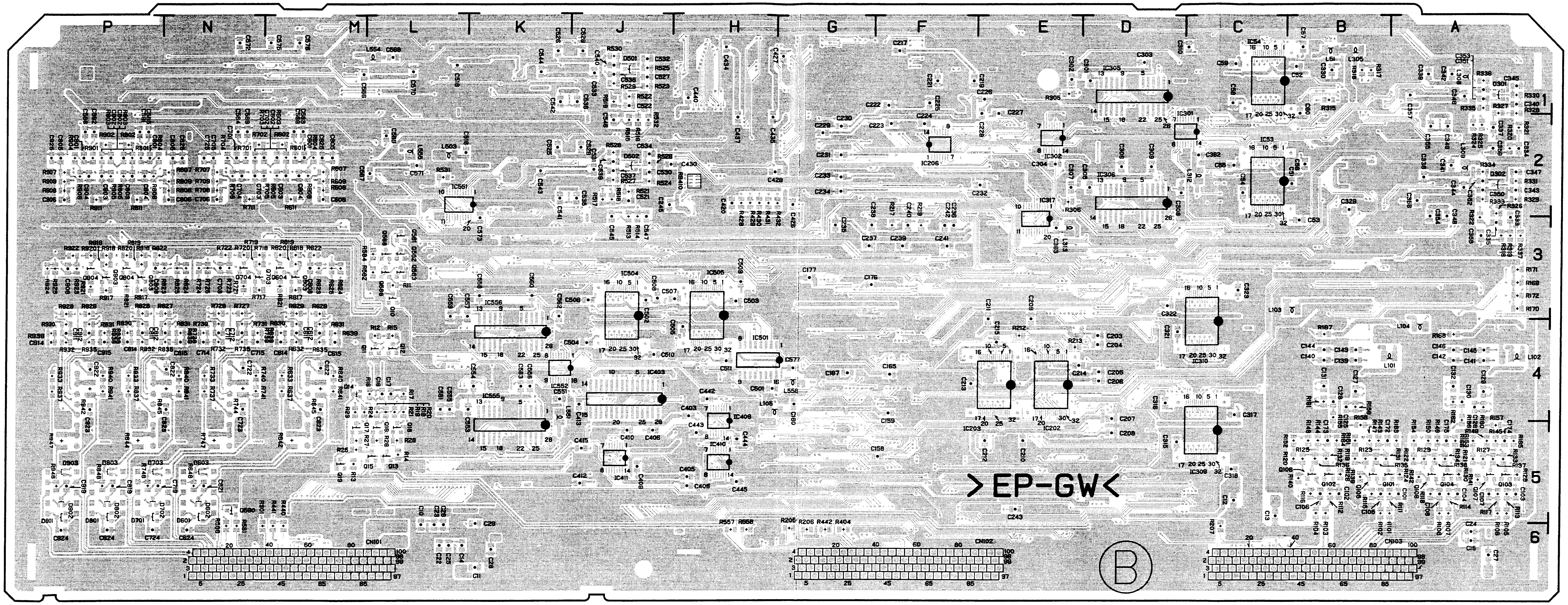

DA-119 -B SIDE-
SUFFIX : -11
MODEL DSR-80/80P

DV-15/15A: VIDEO DIGTAL IN/OUT PROCESS

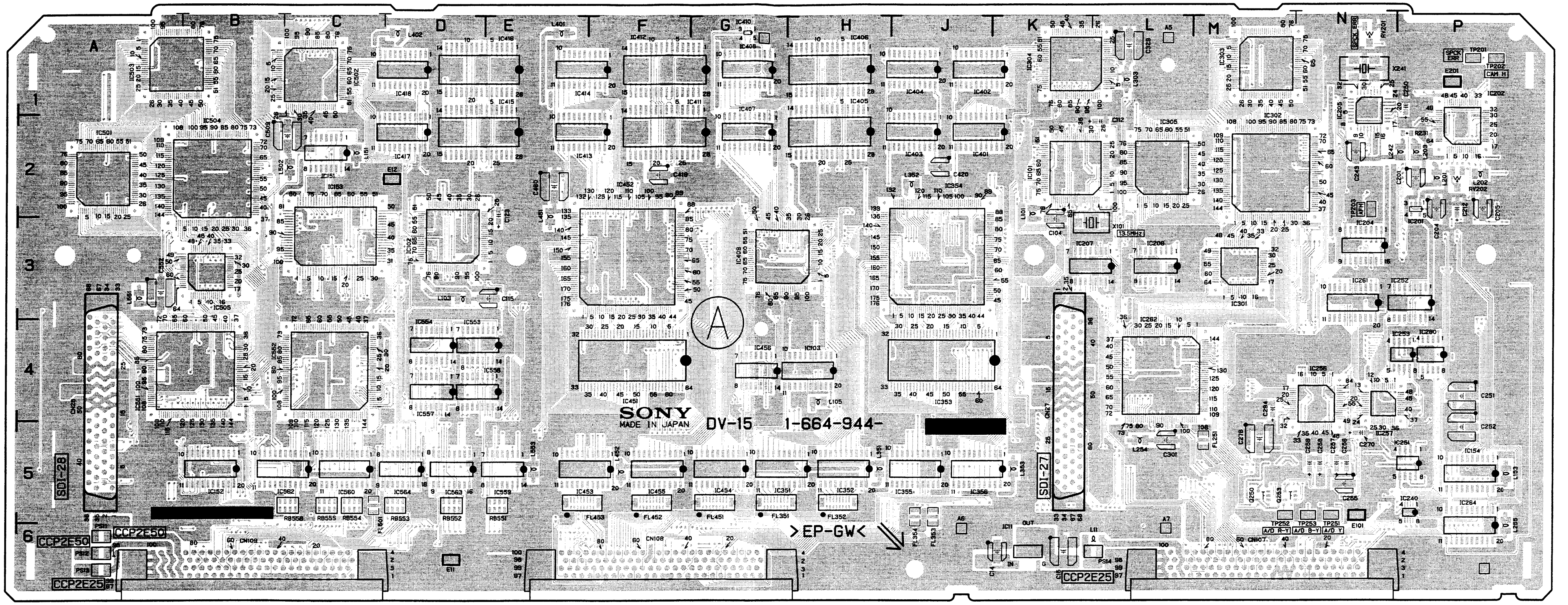

DV-15/15A -A SIDE-

SUFFIX : -13, 14
MODEL DSR-80/80P

DV-15/15A (1-664-944-13,14)

*: B SIDE

CN27	K3	FL453	E5	IC303	M1	IC452	F3	L153	P5	Q202	* P5	RB355	* J5
CN28	A5	FL501	C5	IC304	K1	IC453	E5	L201	P2	Q241	* N1	RB356	* J5
CN107	N6			IC305	L2	IC454	G5	L202	P2	Q250	M5	RB451	* F5
CN108	G6	IC11	K6	IC351	G5	IC455	F5	L203	P2	Q251	* N5	RB452	* F5
CN109	C6	IC101	K2	IC352	H5	IC456	G4	L242	P2	Q252	* N5	RB453	* F5
		IC102	D3	IC353	J4	IC501	A2	L251	* P4	Q253	M5	RB454	* F5
D101	* K2	IC103	H4	IC354	J3	IC502	C1	L252	* P5	Q254	* P4	RB455	* C5
D102	* K2	IC151	C2	IC355	J5	IC503	A1	L253	* M5	Q255	* M4	RB456	* C5
D103	* D3	IC152	B5	IC356	J5	IC504	B2	L254	L5	Q256	* P5	RB457	* C5
D104	* D3	IC153	C3	IC401	J2	IC551	B4	L255	P6	Q258	* P5	RB458	* L6
D151	* C2	IC154	P5	IC402	J1	IC552	C4	L303	L1	Q301	* B3	RB501	* B3
D201	* P2	IC201	P2	IC403	J2	IC553	D4	L351	H5	Q551	* D4	RB502	* B3
D251	* P4	IC202	P2	IC404	J1	IC554	D4	L352	J2	Q552	* D4	RB551	E5
D252	* N4	IC204	N3	IC405	H2	IC557	D4	L353	K5			RB552	D5
D253	* M4	IC205	N1	IC406	H1	IC558	D4	L401	E1	RB101	* D5	RB553	D5
		IC206	L3	IC407	G2	IC559	E5	L402	D1	RB102	* D5	RB554	C5
E11	D6	IC207	K3	IC408	G1	IC560	C5	L451	E2	RB103	* D5	RB555	C5
E12	D2	IC240	P5	IC409	G3	IC562	C5	L452	F5	RB151	* B5	RB556	C5
E101	N5	IC251	P5	IC410	G1	IC563	D5	L502	C2	RB152	* P5		
E201	P1	IC252	P3	IC411	F2	IC564	D5	L551	A3	RB153	* P5	RV201	N1
		IC253	P4	IC412	F1			L553	E5	RB201	* N5		
FL251	M5	IC256	N4	IC413	E2	L11	L6			RB202	* M5	TP201	P1
FL351	G5	IC257	N4	IC414	E1	L101	K2	PS11	A6	RB203	* M5	TP251	N5
FL352	H5	IC261	N3	IC415	D2	L102	* K2	PS12	A6	RB204	* M5	TP252	M5
FL353	J5	IC262	L4	IC416	D1	L103	D3	PS13	A6	RB251	* P6	TP253	N5
FL354	J5	IC264	P6	IC417	D2	L104	* D3	PS14	L6	RB301	* M3		
FL451	G5	IC280	P4	IC418	D1	L105	H4			RB302	* M3	X101	K3
FL452	F5	IC302	M2	IC451	F4	L151	C2	Q201	* L3	RB354	* J5	X241	N1

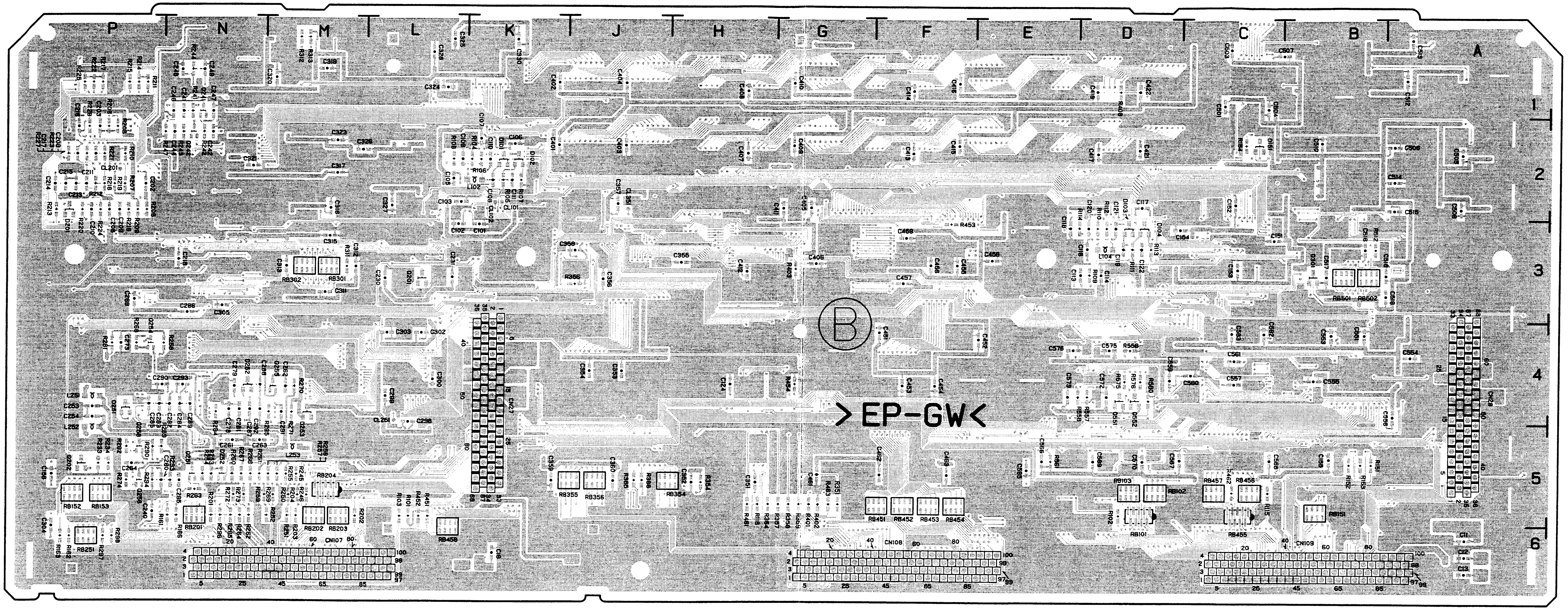

DV-15/15A -B SIDE-

SUFFIX : -13, 14
MODEL DSR-80/80P

DV-15/15A: VIDEO DIGTAL IN/OUT PROCESS

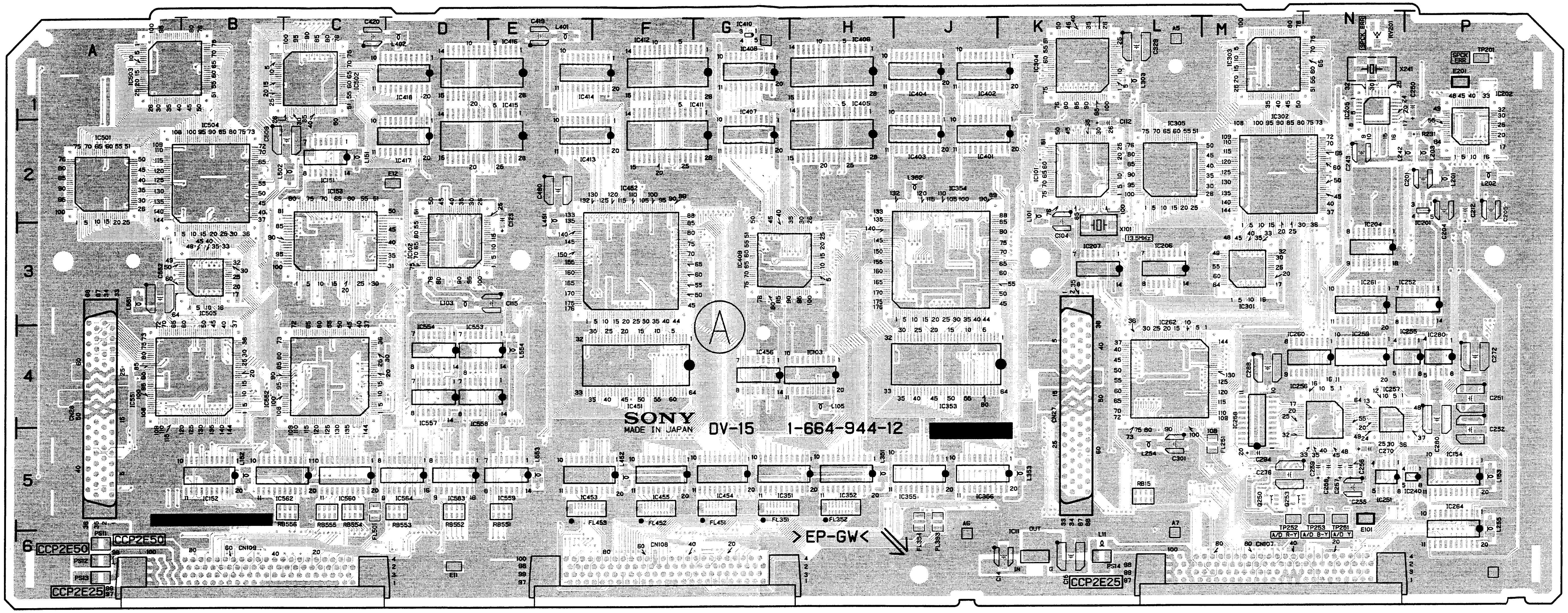

DV-15/15A -A SIDE-

SUFFIX : -12

MODEL DSR-80/80P

DV-15/15A (1-664-944-12)

*: B SIDE

CN27	K3	FL453	E5	IC303	M1	IC452	F3	L153	P5	Q202	* P5	RB355	* J5
CN28	A5	FL501	C5	IC304	K1	IC453	E5	L201	P2	Q241	* N1	RB356	* J5
CN107	N6			IC305	L2	IC454	G5	L202	P2	Q250	M5	RB451	* F5
CN108	G6	IC11	K6	IC351	G5	IC455	F5	L203	P2	Q251	* N5	RB452	* F5
CN109	C6	IC101	K2	IC352	H5	IC456	G4	L242	P2	Q252	* N5	RB453	* F5
		IC102	D3	IC353	J4	IC501	A2	L251	* P4	Q253	M5	RB454	* F5
D101	* K2	IC103	H4	IC354	J3	IC502	C1	L252	* P5	Q254	* P4	RB455	* C5
D102	* K2	IC151	C2	IC355	J5	IC503	A1	L253	* M5	Q255	* M4	RB456	* C5
D103	* D3	IC152	B5	IC356	J5	IC504	B2	L254	L5	Q256	* P5	RB457	* C5
D104	* D3	IC153	C3	IC401	J2	IC551	B4	L255	P6	Q258	* P5	RB458	* L6
D151	* C2	IC154	P5	IC402	J1	IC552	C4	L303	L1	Q301	* B3	RB501	* B3
D201	* P2	IC201	P2	IC403	J2	IC553	D4	L351	H5	Q551	* D4	RB502	* B3
D251	* P4	IC202	P2	IC404	J1	IC554	D4	L352	J2	Q552	* D4	RB551	E5
D252	* N4	IC204	N3	IC405	H2	IC557	D4	L353	K5			RB552	D5
D253	* M4	IC205	N1	IC406	H1	IC558	D4	L401	E1	RB101	* D5	RB553	D5
		IC206	L3	IC407	G2	IC559	E5	L402	D1	RB102	* D5	RB554	C5
E11	D6	IC207	K3	IC408	G1	IC560	C5	L451	E2	RB103	* D5	RB555	C5
E12	D2	IC240	P5	IC409	G3	IC562	C5	L452	F5	RB151	* B5	RB556	C5
E101	N5	IC251	P5	IC410	G1	IC563	D5	L502	C2	RB152	* P5		
E201	P1	IC252	P3	IC411	F2	IC564	D5	L551	A3	RB153	* P5	RV201	N1
		IC253	P4	IC412	F1			L553	E5	RB201	* N5		
FL251	M5	IC256	N4	IC413	E2	L11	L6			RB202	* M5	TP201	P1
FL351	G5	IC257	N4	IC414	E1	L101	K2	PS11	A6	RB203	* M5	TP251	N5
FL352	H5	IC261	N3	IC415	D2	L102	* K2	PS12	A6	RB204	* M5	TP252	M5
FL353	J5	IC262	L4	IC416	D1	L103	D3	PS13	A6	RB251	* P6	TP253	N5
FL354	J5	IC264	P6	IC417	D2	L104	* D3	PS14	L6	RB301	* M3		
FL451	G5	IC280	P4	IC418	D1	L105	H4			RB302	* M3	X101	K3
FL452	F5	IC302	M2	IC451	F4	L151	C2	Q201	* L3	RB354	* J5	X241	N1

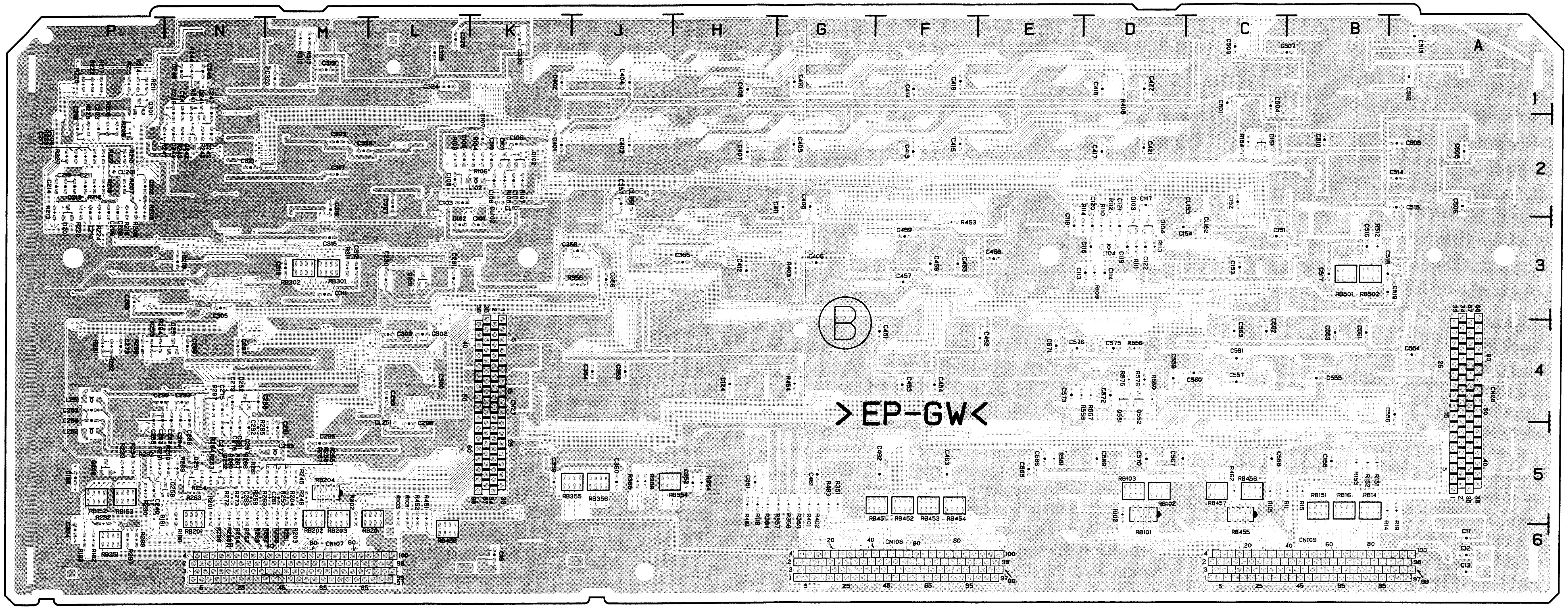

DV-15/15A -B SIDE-

SUFFIX : -12

MODEL DSR-80/80P

DV-15/15A: VIDEO DIGTAL IN/OUT PROCESS

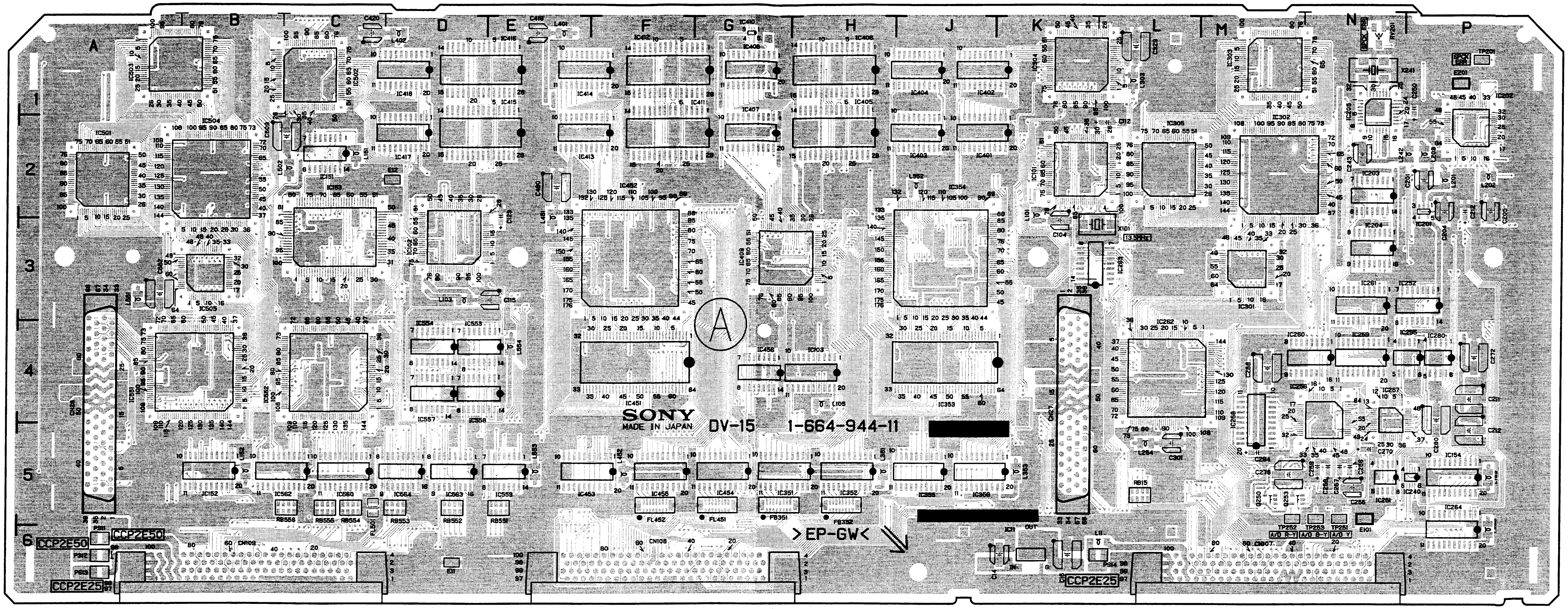

DV-15/15A -A SIDE-
SUFFIX : -11
MODEL DSR-80/80P

DV-15/15A (1-664-944-11)

*: B SIDE

CN27	K3
CN28	A5
CN107	N6
CN108	G6
CN109	C6
D101	* K2
D102	* K2
D103	* D3
D104	* D3
D151	* C2
D201	* P2
D251	* N4
D252	* N4
E11	D6
E12	D2
E101	N5
E201	P1
FB351	G5
FB352	H5
FL451	G5
FL452	F5
FL501	C5
IC11	K6
IC101	K2
IC102	D3
IC103	H4
IC151	C2
IC152	B5
IC153	C3
IC154	P5
IC201	P2
IC202	P2
IC203	N2
IC204	N3
IC205	N1 (#1)
IC240	P5
IC251	N5
IC252	P3
IC255	P4
IC256	N4
IC257	N4
IC258	M4
IC259	N4
IC260	N4
IC261	N3
IC262	L4
IC263	K3
IC264	P6
IC280	P4
IC301	M3 (#2)
IC302	M2
IC303	M1
IC304	K1
IC305	L2
IC351	G5
IC352	H5
IC353	J4
IC354	J3
IC355	J5
IC356	J5
IC401	J2
IC402	J1
IC403	J2
IC404	J1
IC405	H2
IC406	H1
IC407	G2
IC408	G1
IC409	G3
IC410	G1
IC411	F2
IC412	F1
IC413	E2
IC414	E1
IC415	D2
IC416	D1
IC417	D2
IC418	D1
IC451	F4
IC452	F3
IC453	E5
IC454	G5
IC455	F5
IC456	G4
IC501	A2
IC502	C1
IC503	A1
IC504	B2
IC505	B3 (#2)
IC551	B4
IC552	C4 (#1)
IC553	D4 (#1)
IC554	D4 (#1)
IC557	D4 (#1)
IC558	D4 (#1)
IC559	E5
IC560	C5
IC562	C5
IC563	D5
IC564	D5
L11	L6
L101	K2
L102	* K2
L103	D3
L104	* D3
L105	H4
L151	C2
L152	B5
L153	P5
L201	P2
L202	P2
L203	P2
L242	P2 (#1)
L251	* P4
L252	* P5
L253	* M5
L254	L5
L255	P6
L303	L1
L351	H5
L352	J2
L353	K5
L401	E1
L402	D1
L451	E2
L452	F5
L502	C2
L551	A3
L553	E5
L554	E4
PS11	A6
PS12	A6
PS13	A6
PS14	L6
Q241	* N1 (#1)
Q242	* N2 (#1)
Q250	M5
Q251	* N5 (#1)
Q252	* N5 (#1)
Q253	M5
Q258	* N5
Q301	* P1
Q551	* D4 (#1)
Q552	* D4 (#1)
RB14	* B5
RB15	L5
RB16	* B5
RB20	* L5
RB101	* D5
RB102	* D5
RB103	* D5
RB151	* B5
RB152	* P5
RB153	* P5
RB201	* N5
RB202	* M5
RB203	* M5
RB204	* M5
RB251	* P6
RB301	* M3 (#1)
RB302	* M3 (#1)
RB354	* J5
RB355	* J5
RB356	* J5
RB357	* J5
RB451	* F5
RB452	* F5
RB453	* F5
RB454	* F5
RB455	* C5
RB456	* C5
RB457	* C5
RB458	* L6
RB459	* F5
RB501	* B3 (#1)
RB502	* B3 (#1)
RB551	[illegible]5
RB552	D5
RB553	D5
RB554	C5
RB555	C5
RB556	C5
RV201	N1
TP201	P1
TP251	N5
TP252	M5
TP253	N5
X101	K3
X241	N1 (#1)

#1: DV-15
#2: DV-15A

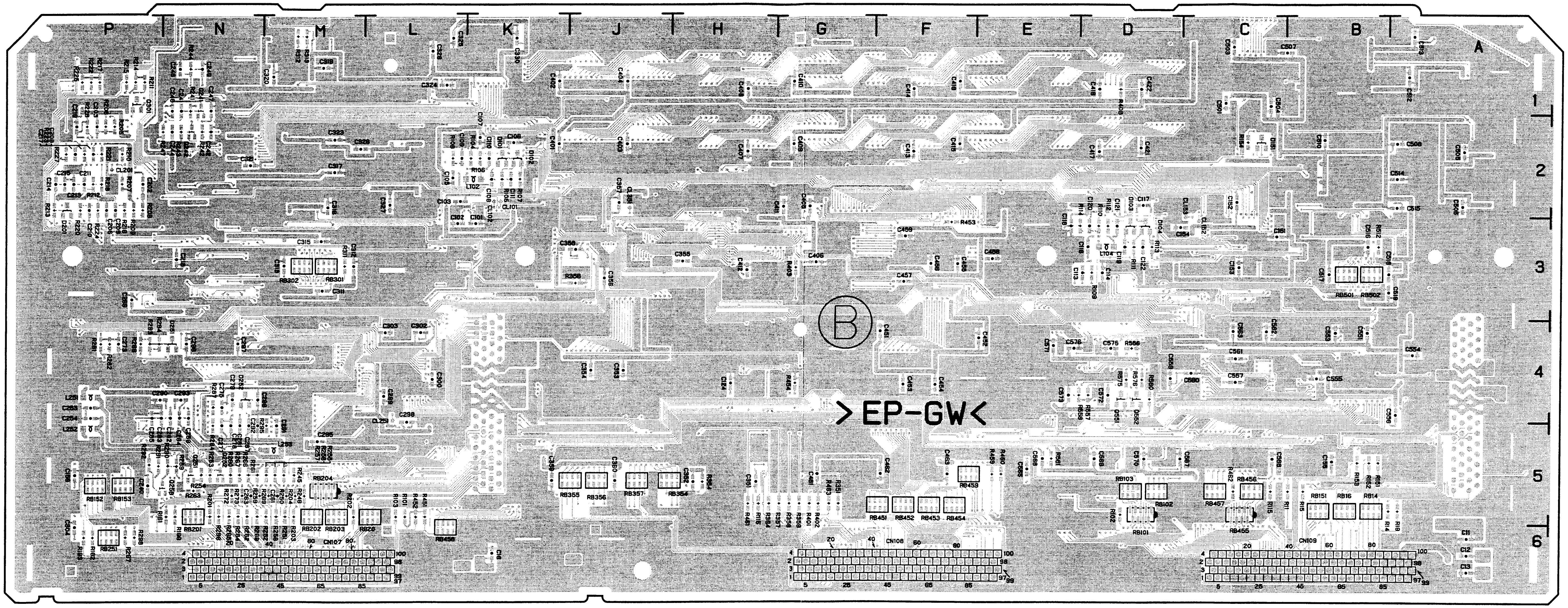

DV-15/15A -B SIDE-

SUFFIX : -11
MODEL DSR-80/80P

DV-17/17A: VIDEO/AUDIO DIGITAL PROCESS
AUDIO ANALOG PROCESS

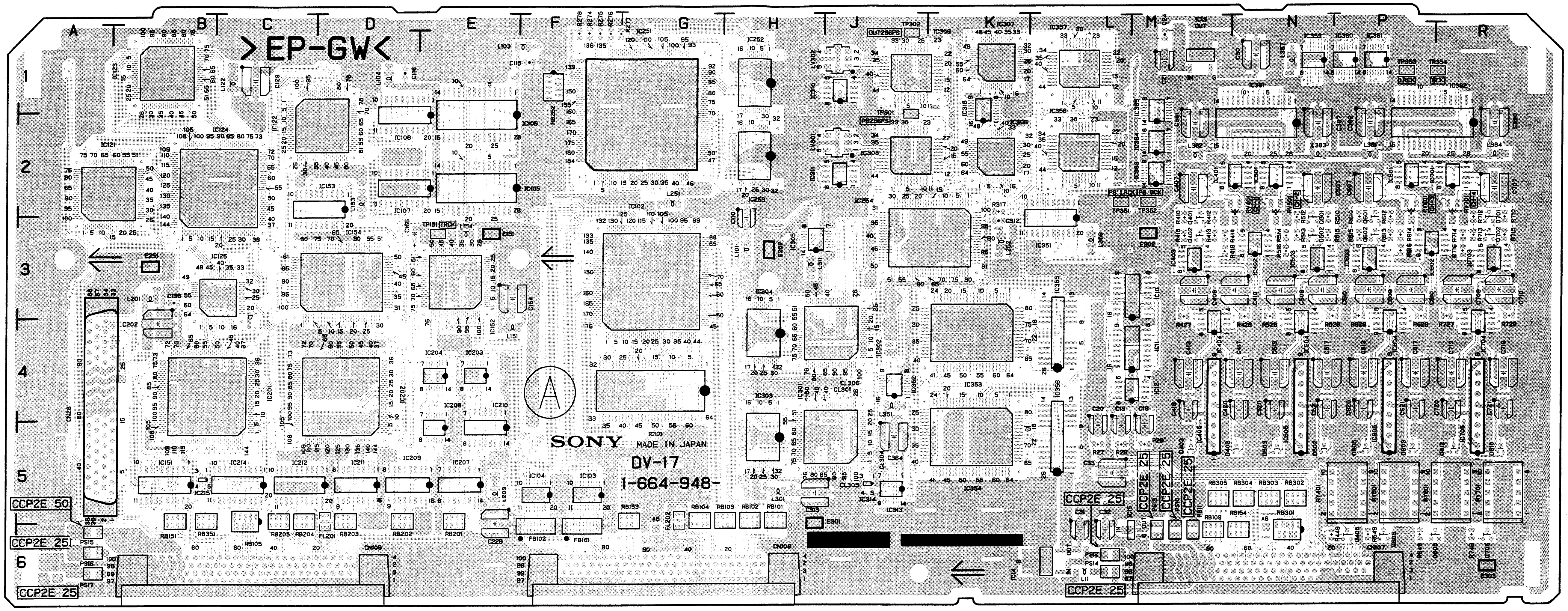

DV-17/17A -A SIDE-
SUFFIX : -13, 14
MODEL DSR-60/60P

DV-17/17A (1-664-948-13,14)

*: B SIDE

Ref.	Location
CN1H	K3
CN28	B5
CN107	P6
CN108	H6
CN109	D6
D151	* E3
D152	* E3
D301	* J1
D302	* J2
D401	* P5
D402	N5
D403	M5
D501	* P5
D502	N5
D503	N5
D801	* R5
D803	P5
D805	P5
D808	* R5
D810	R5
D812	R5
E151	E3
E251	A3
E252	F2
E301	R6
FB101	F6
FB102	F6
FL201	D5
IC10	M3
IC11	M4
IC12	M4
IC13	M1
IC14	L6
IC15	M6
IC101	G4
IC102	G3
IC103	F5
IC104	F5
IC105	E2
IC106	E2
IC107	D2
IC108	D2
IC121	A2
IC122	D2
IC123	B1
IC124	C2
IC125	C3 (PAL ONLY)
IC151	B5
IC152	E3
IC153	D2
IC154	D3
IC201	B4
IC202	D4 (NTSC ONLY)
IC203	E4 (NTSC ONLY)
IC204	E4 (NTSC ONLY)
IC207	E5
IC208	E5 (NTSC ONLY)
IC209	D5
IC210	E5 (NTSC ONLY)
IC211	D5
IC212	C5
IC214	C5
IC251	G2
IC252	H1
IC253	H2
IC301	J5
IC302	J4
IC303	H5
IC304	H4
IC305	H3
IC306	K2
IC307	K1
IC308	J2
IC309	J1
IC310	J1
IC311	J2
IC351	L3
IC352	J4
IC353	K4
IC354	K5
IC355	L4
IC356	L5
IC357	L1
IC358	L2
IC359	N1
IC360	P1
IC361	P1
IC381	N2
IC382	P2
IC401	N2
IC402	N3
IC403	M3
IC404	M4
IC405	M5
IC501	N2
IC503	N3
IC504	N4
IC505	N5
IC601	P2
IC602	P3
IC603	P3
IC604	P4
IC605	P5
IC701	R2
IC703	R3
IC704	R4
IC705	R5
LV301	J2
LV302	J1
L101	H3
L102	F5
L103	F1
L104	D1
L122	C1
L151	E3
L152	B5
L153	D2
L154	E3
L201	B3
L203	E5
L204	E5
L251	G2
L301	H5
L302	H4
L303	* K2
L304	* K1
L305	* K1
L306	* K2
L307	* K1
L308	* K2
L309	* H2
L310	* J1
L311	H3
L351	J4
L352	J4
L353	J3
L354	* L1
L355	* L2
L356	L3
L357	N1
L381	P2
L382	M2
L383	N2
L384	R2
PS10	M6
PS11	M6
PS12	L6
PS13	M6
PS14	L6
PS15	A6
PS16	A6
PS17	A6
Q10	* L3
Q11	* M4
Q12	* L4
Q13	* M5
Q14	* L4
Q15	* M5
Q16	* M5
Q17	* L5
Q18	* L5
Q19	* L5
Q201	* E4 (NTSC ONLY)
Q202	* D4 (NTSC ONLY)
Q381	* L2
Q382	* L2
Q383	* L3
Q384	* L3
Q385	* L3
Q386	* M3
Q387	* M3
Q388	* M2
Q389	* M3
Q390	* N5
Q401	M3
Q402	M3
Q403	* M3
Q404	* N3
Q405	P6
Q501	N3
Q502	N3
Q503	* N3
Q504	* N3
Q505	P6
Q601	P3
Q602	P3
Q603	* P3
Q604	* P3
Q605	R6
Q701	R3
Q702	R3
Q703	* R3
Q704	* R3
Q705	R6
RB101	H5
RB102	H5
RB103	G5
RB104	G5
RB105	C5
RB107	* C5
RB108	* C5
RB109	M6
RB121	* C3 (NTSC ONLY)
RB122	* B3 (NTSC ONLY)
RB151	B5
RB153	G5
RB154	N6
RB201	E5
RB202	D5
RB203	D5
RB204	C5
RB205	C5
RB206	* C5
RB251	B5
RB252	F1
RB301	N6
RB302	N5
RB303	N5
RB304	N5
RB305	M5
RB351	* B5
RV401	N2
RV501	N2
RV601	P2
RV701	R2
RY401	P5
RY501	P5
RY601	R5
RY701	R5
TP301	J1
TP302	J1

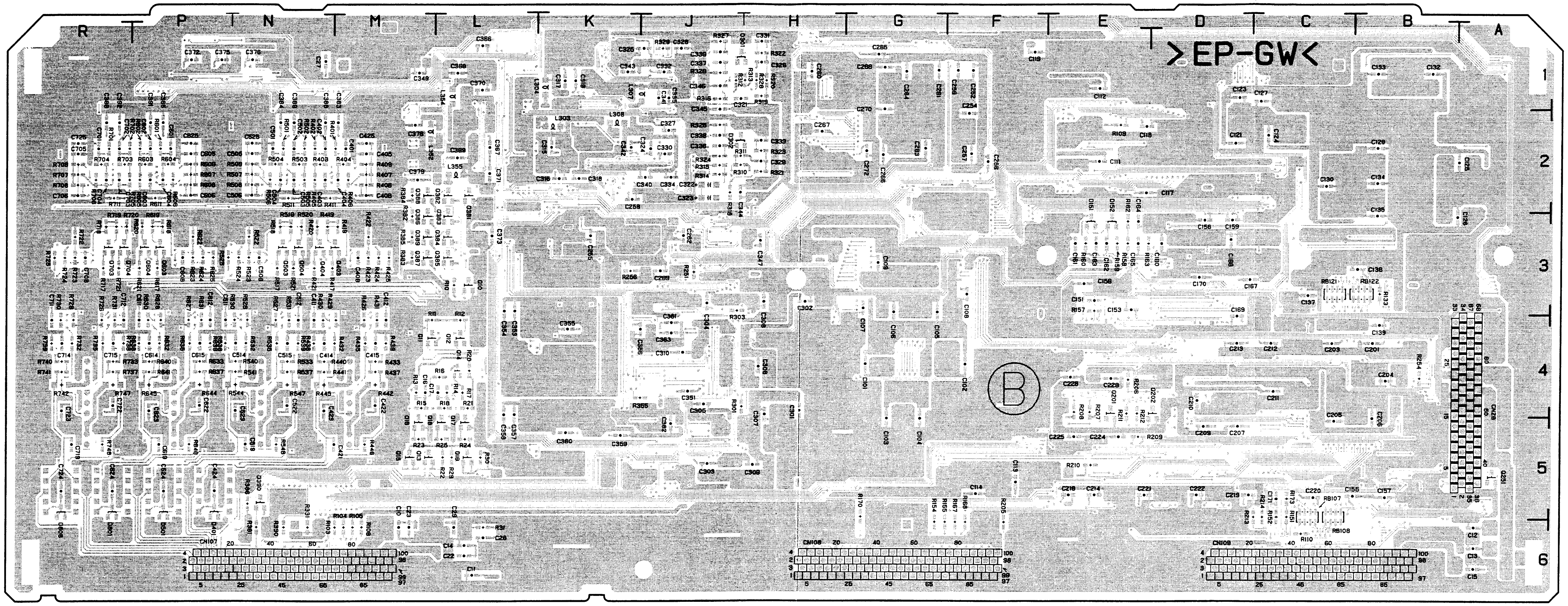

DV-17/17A -B SIDE-
SUFFIX : -13, 14
MODEL DSR-60/60P

DV-17/17A: VIDEO/AUDIO DIGITAL PROCESS
AUDIO ANALOG PROCESS

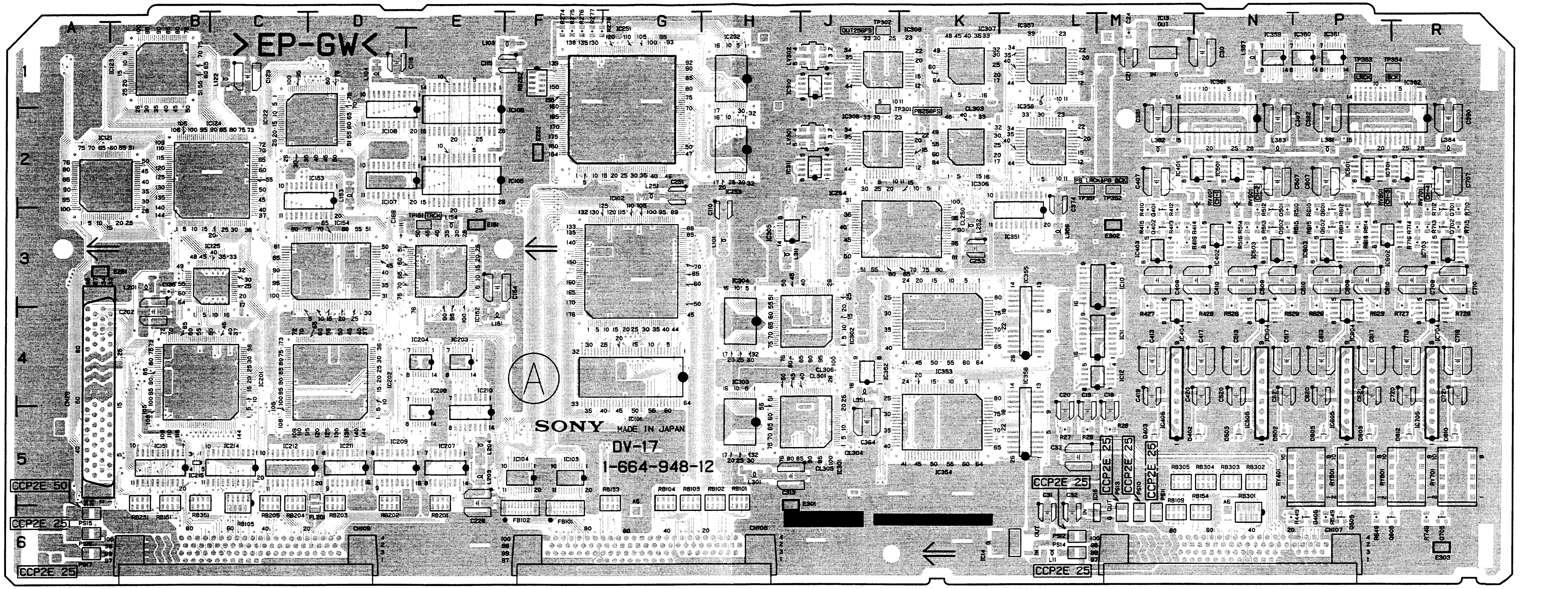

DV-17/17A -A SIDE-

SUFFIX : -12

MODEL DSR-60/60P

DV-17/17A (1-664-948-12)

*: B SIDE

CN1H	K3	
CN28	B5	
CN107	P6	
CN108	H6	
CN109	D6	
D151	* E3	
D152	* E3	
D301	* J1	
D302	* J2	
D401	* P5	
D402	N5	
D403	M5	
D501	* P5	
D502	N5	
D503	N5	
D801	* R5	
D803	P5	
D805	P5	
D808	* R5	
D810	R5	
D812	R5	
E151	E3	
E251	A3	
E252	F2	
E301	R6	
FB101	F6	
FB102	F6	
FL201	D5	
IC10	M3	
IC11	M4	
IC12	M4	
IC13	M1	
IC14	L6	
IC15	M6	
IC101	G4	
IC102	G3	
IC103	F5	
IC104	F5	
IC105	E2	
IC106	E2	
IC107	D2	
IC108	D2	
IC121	A2	
IC122	D2	
IC123	B1	
IC124	C2	
IC125	C3	(PAL ONLY)
IC151	B5	
IC152	E3	
IC153	D2	
IC154	D3	
IC201	B4	
IC202	D4	(NTSC ONLY)
IC203	E4	(NTSC ONLY)
IC204	E4	(NTSC ONLY)
IC207	E5	
IC208	E5	(NTSC ONLY)
IC209	D5	
IC210	E5	(NTSC ONLY)
IC211	D5	
IC212	C5	
IC214	C5	
IC251	G2	
IC252	H1	
IC253	H2	
IC301	J5	
IC302	J4	
IC303	H5	
IC304	H4	
IC305	H3	
IC306	K2	
IC307	K1	
IC308	J2	
IC309	J1	
IC310	J1	
IC311	J2	
IC351	L3	
IC352	J4	
IC353	K4	
IC354	K5	
IC355	L4	
IC356	L5	
IC357	L1	
IC358	L2	
IC359	N1	
IC360	P1	
IC361	P1	
IC381	N2	
IC382	P2	
IC401	N2	
IC402	N3	
IC403	M3	
IC404	M4	
IC405	M5	
IC501	N2	
IC503	N3	
IC504	N4	
IC505	N5	
IC601	P2	
IC602	P3	
IC603	P3	
IC604	P4	
IC605	P5	
IC701	R2	
IC703	R3	
IC704	R4	
IC705	R5	
LV301	J2	
LV302	J1	
L101	H3	
L102	F5	
L103	F1	
L104	D1	
L122	C1	
L151	E3	
L152	B5	
L153	D2	
L154	E3	
L201	B3	
L203	E5	
L204	E5	
L251	G2	
L301	H5	
L302	H4	
L303	* K2	
L304	* K1	
L305	* K1	
L306	* K2	
L307	* K1	
L308	* K2	
L309	* H2	
L310	* J1	
L311	H3	
L351	J4	
L352	J4	
L353	J3	
L354	* L1	
L355	* L2	
L356	L3	
L357	N1	
L381	P2	
L382	M2	
L383	N2	
L384	R2	
PS10	M6	
PS11	M6	
PS12	L6	
PS13	M6	
PS14	L6	
PS15	A6	
PS16	A6	
PS17	A6	
Q10	* L3	
Q11	* M4	
Q12	* L4	
Q13	* M5	
Q14	* L4	
Q15	* M5	
Q16	* M5	
Q17	* L5	
Q18	* L5	
Q19	* L5	
Q201	* E4	(NTSC ONLY)
Q202	* D4	(NTSC ONLY)
Q381	* L2	
Q382	* L2	
Q383	* L3	
Q384	* L3	
Q385	* L3	
Q386	* M3	
Q387	* M3	
Q388	* M2	
Q389	* M3	
Q390	* N5	
Q401	M3	
Q402	M3	
Q403	* M3	
Q404	* N3	
Q405	P6	
Q501	N3	
Q502	N3	
Q503	* N3	
Q504	* N3	
Q505	P6	
Q601	P3	
Q602	P3	
Q603	* P3	
Q604	* P3	
Q605	R6	
Q701	R3	
Q702	R3	
Q703	* R3	
Q704	* R3	
Q705	R6	
RB101	H5	
RB102	H5	
RB103	G5	
RB104	G5	
RB105	C5	
RB107	* C5	
RB108	* C5	
RB109	M6	
RB121	* C3	(NTSC ONLY)
RB122	* B3	(NTSC ONLY)
RB151	B5	
RB153	G5	
RB154	N6	
RB201	E5	
RB202	D5	
RB203	D5	
RB204	C5	
RB205	C5	
RB206	* C5	
RB251	B5	
RB252	F1	
RB301	N6	
RB302	N5	
RB303	N5	
RB304	N5	
RB305	M5	
RB351	* B5	
RV401	N2	
RV501	N2	
RV601	P2	
RV701	R2	
RY401	P5	
RY501	P5	
RY601	R5	
RY701	R5	
TP301	J1	
TP302	J1	

DSR-60/60P

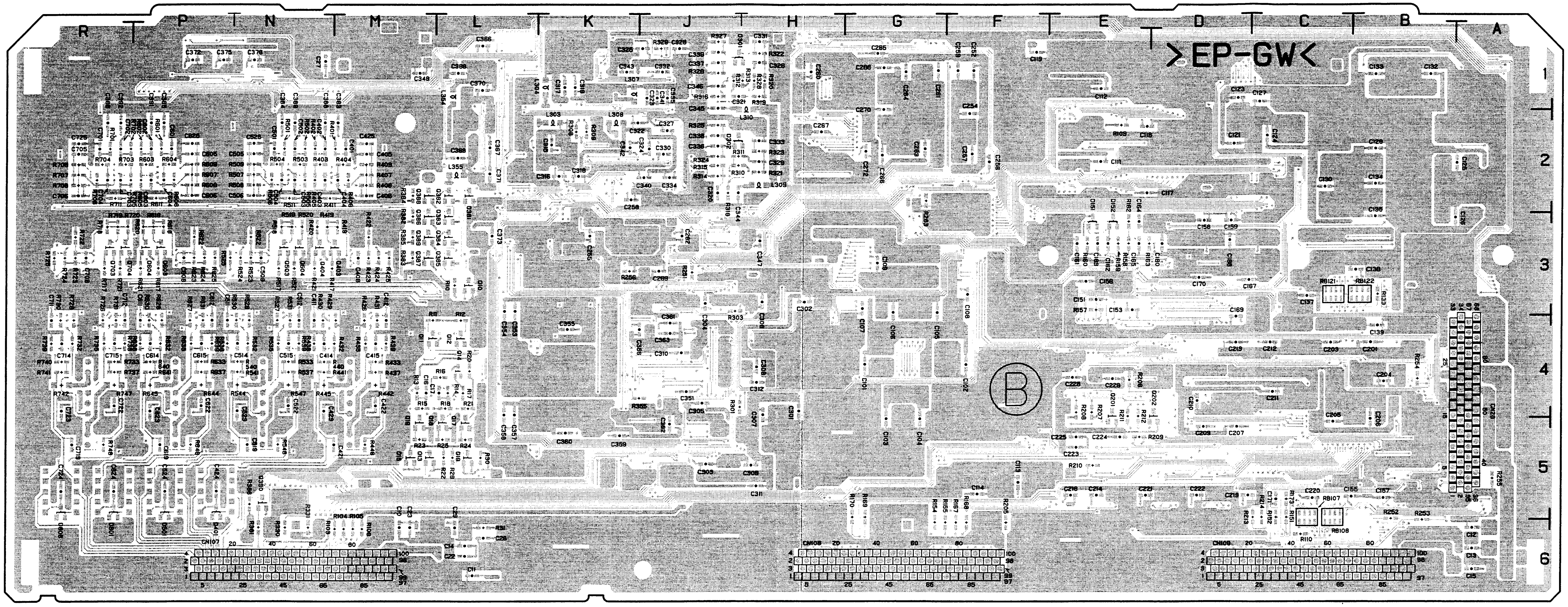

DV-17/17A -B SIDE-

SUFFIX : -12
MODEL DSR-60/60P

DSR-60/60P

DV-17/17A: VIDEO/AUDIO DIGITAL PROCESS
AUDIO ANALOG PROCESS

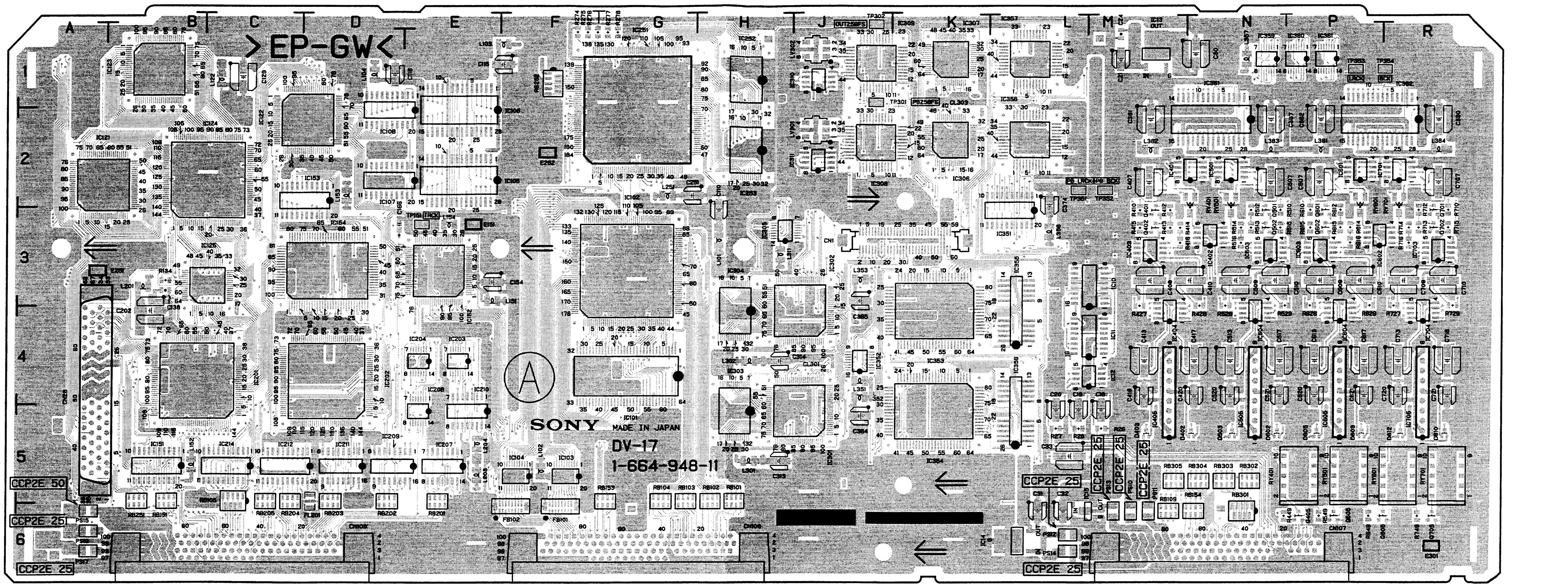

DV-17/17A -A SIDE-

SUFFIX : -11

MODEL DSR-60/60P

DV-17/17A (1-664-948-11)

*: B SIDE

Ref.	Location	Remark
CN1H	K3	
CN28	B5	
CN107	P6	
CN108	H6	
CN109	D6	
D151	* E3	
D152	* E3	
D301	* J1	
D302	* J2	
D401	* P5	
D402	N5	
D403	M5	
D501	* P5	
D502	N5	
D503	N5	
D801	* R5	
D803	P5	
D805	P5	
D808	* R5	
D810	R5	
D812	R5	
E151	E3	
E251	A3	
E252	F2	
E301	R6	
FB101	F6	
FB102	F6	
FL201	D5	
IC10	M3	
IC11	M4	
IC12	M4	
IC13	M1	
IC14	L6	
IC15	M6	
IC101	G4	
IC102	G3	
IC103	F5	
IC104	F5	
IC105	E2	
IC106	E2	
IC107	D2	
IC108	D2	
IC121	A2	
IC122	D2	
IC123	B1	
IC124	C2	
IC125	C3	(PAL ONLY)
IC151	B5	
IC152	E3	
IC153	D2	
IC154	D3	
IC201	B4	
IC202	D4	(NTSC ONLY)
IC203	E4	(NTSC ONLY)
IC204	E4	(NTSC ONLY)
IC207	E5	
IC208	E5	(NTSC ONLY)
IC209	D5	
IC210	E5	(NTSC ONLY)
IC211	D5	
IC212	C5	
IC214	C5	
IC251	G2	
IC252	H1	
IC253	H2	
IC301	J5	
IC302	J4	
IC303	H5	
IC304	H4	
IC305	H3	
IC306	K2	
IC307	K1	
IC308	J2	
IC309	J1	
IC310	J1	
IC311	J2	
IC351	L3	
IC352	J4	
IC353	K4	
IC354	K5	
IC355	L4	
IC356	L5	
IC357	L1	
IC358	L2	
IC359	N1	
IC360	P1	
IC361	P1	
IC381	N2	
IC382	P2	
IC401	N2	
IC402	N3	
IC403	M3	
IC404	M4	
IC405	M5	
IC501	N2	
IC503	N3	
IC504	N4	
IC505	N5	
IC601	P2	
IC602	P3	
IC603	P3	
IC604	P4	
IC605	P5	
IC701	R2	
IC703	R3	
IC704	R4	
IC705	R5	
LV301	J2	
LV302	J1	
L101	H3	
L102	F5	
L103	F1	
L104	D1	
L122	C1	
L151	E3	
L152	B5	
L153	D2	
L154	E3	
L201	B3	
L203	E5	
L204	E5	
L251	G2	
L301	H5	
L302	H4	
L303	* K2	
L304	* K1	
L305	* K1	
L306	* K2	
L307	* K1	
L308	* K2	
L309	* H2	
L310	* J1	
L311	H3	
L351	J4	
L352	J4	
L353	J3	
L354	* L1	
L355	* L2	
L356	L3	
L357	N1	
L381	P2	
L382	M2	
L383	N2	
L384	R2	
PS10	M6	
PS11	M6	
PS12	L6	
PS13	M6	
PS14	L6	
PS15	A6	
PS16	A6	
PS17	A6	
Q10	* L3	
Q11	* M4	
Q12	* L4	
Q13	* M5	
Q14	* L4	
Q15	* M5	
Q16	* M5	
Q17	* L5	
Q18	* L5	
Q19	* L5	
Q201	* E4	(NTSC ONLY)
Q202	* D4	(NTSC ONLY)
Q381	* L2	
Q382	* L2	
Q383	* L3	
Q384	* L3	
Q385	* L3	
Q386	* M3	
Q387	* M3	
Q388	* M2	
Q389	* M3	
Q390	* N5	
Q401	M3	
Q402	M3	
Q403	* M3	
Q404	* N3	
Q405	P6	
Q501	N3	
Q502	N3	
Q503	* N3	
Q504	* N3	
Q505	P6	
Q601	P3	
Q602	P3	
Q603	* P3	
Q604	* P3	
Q605	R6	
Q701	R3	
Q702	R3	
Q703	* R3	
Q704	* R3	
Q705	R6	
RB101	H5	
RB102	H5	
RB103	G5	
RB104	G5	
RB105	C5	
RB107	* C5	
RB108	* C5	
RB109	M6	
RB121	* C3	(NTSC ONLY)
RB122	* B3	(NTSC ONLY)
RB151	B5	
RB153	G5	
RB154	N6	
RB201	E5	
RB202	D5	
RB203	D5	
RB204	C5	
RB205	C5	
RB206	* C5	
RB251	B5	
RB252	F1	
RB301	N6	
RB302	N5	
RB303	N5	
RB304	N5	
RB305	M5	
RB351	* B5	
RV401	N2	
RV501	N2	
RV601	P2	
RV701	R2	
RY401	P5	
RY501	P5	
RY601	R5	
RY701	R5	
TP301	J1	
TP302	J1	

DSR-60/60P

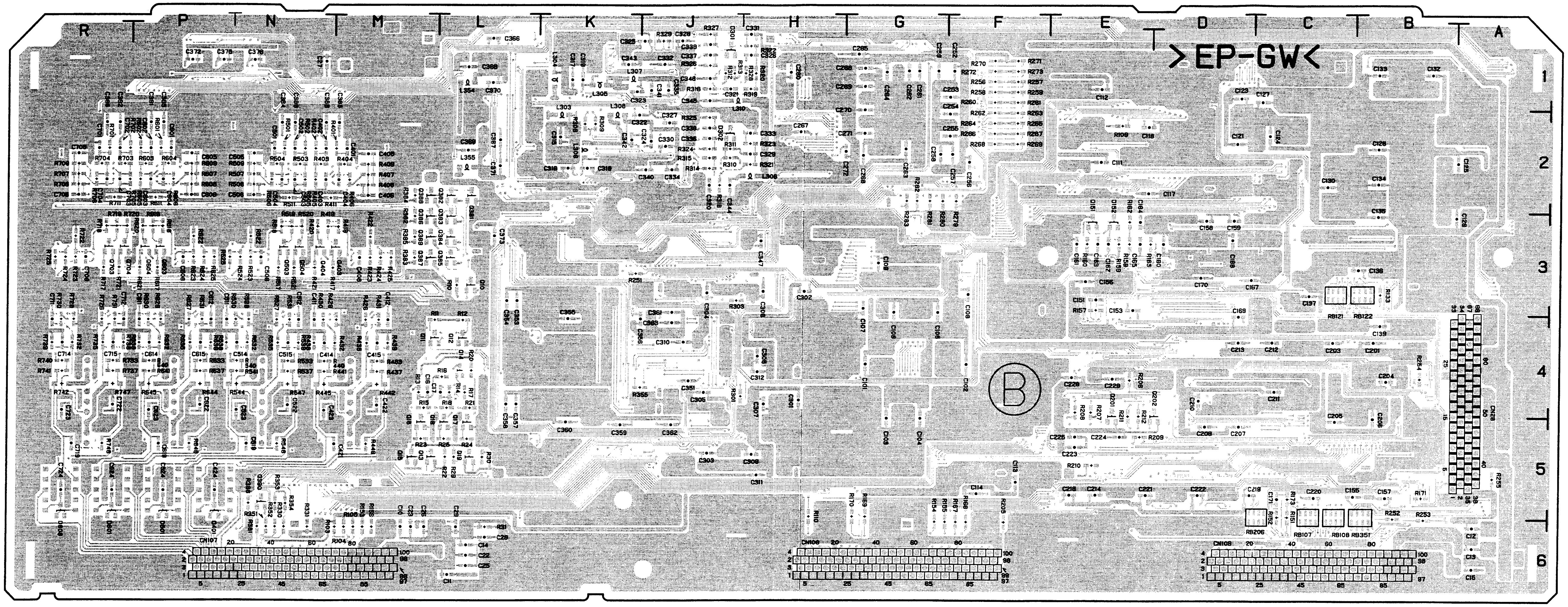

DV-17/17A -B SIDE-
SUFFIX : -11
MODEL DSR-60/60P

FP-75: MENU PANEL SWITCH
HP-73: HP VOLUME/CONNECTOR

FP-75 (1-662-923-11,12)

*: B SIDE

CN724	C1
D1	* B1
D2	* A1
D3	* B1
D4	* B1
D5	* C2
RV1	C1
RV2	C1
S1	B1
S2	B2
S3	A2
S4	A1
S5	A1
S6	A2
S7	A2
S8	B2
S9	C2
S10	C2

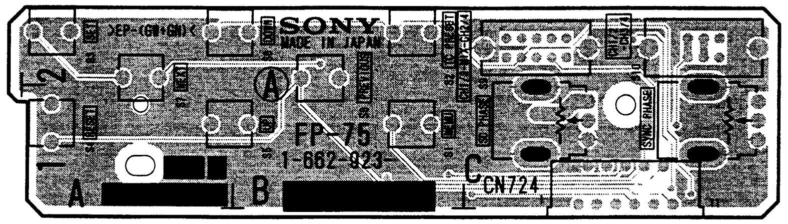

FP-75 -A SIDE-
SUFFIX : -11, 12
MODEL DSR-80/80P/60/60P

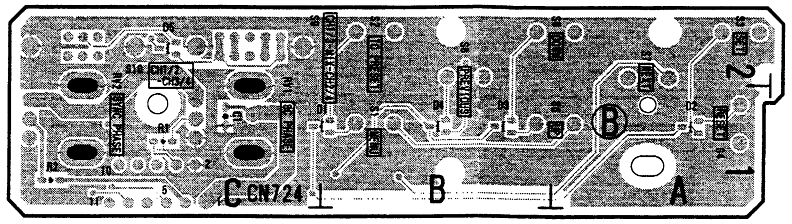

FP-75 -B SIDE-
SUFFIX : -11, 12
MODEL DSR-80/80P/60/60P

HP-73 (1-662-922-11)

*: B SIDE

CN731	A1
CN733	A1
JW1	A1
J1	A1
J2	A1
RV1	A1

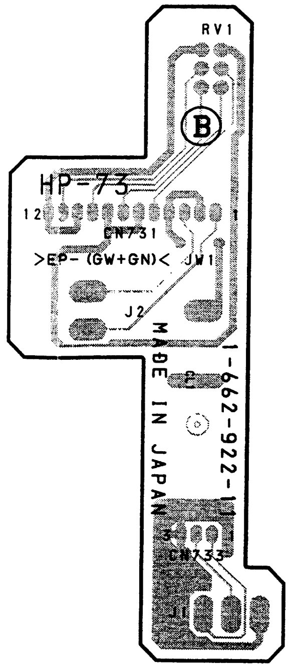

HP-73 -B SIDE-
SUFFIX : -11
MODEL DSR-80/80P/60/60P

IO-149B/149C: VIDEO ANALOG OUT PROCESS (DSR-60/60P)
IO-149/149A: VIDEO ANALOG IN/OUT PROCESS (DSR-80/80P)

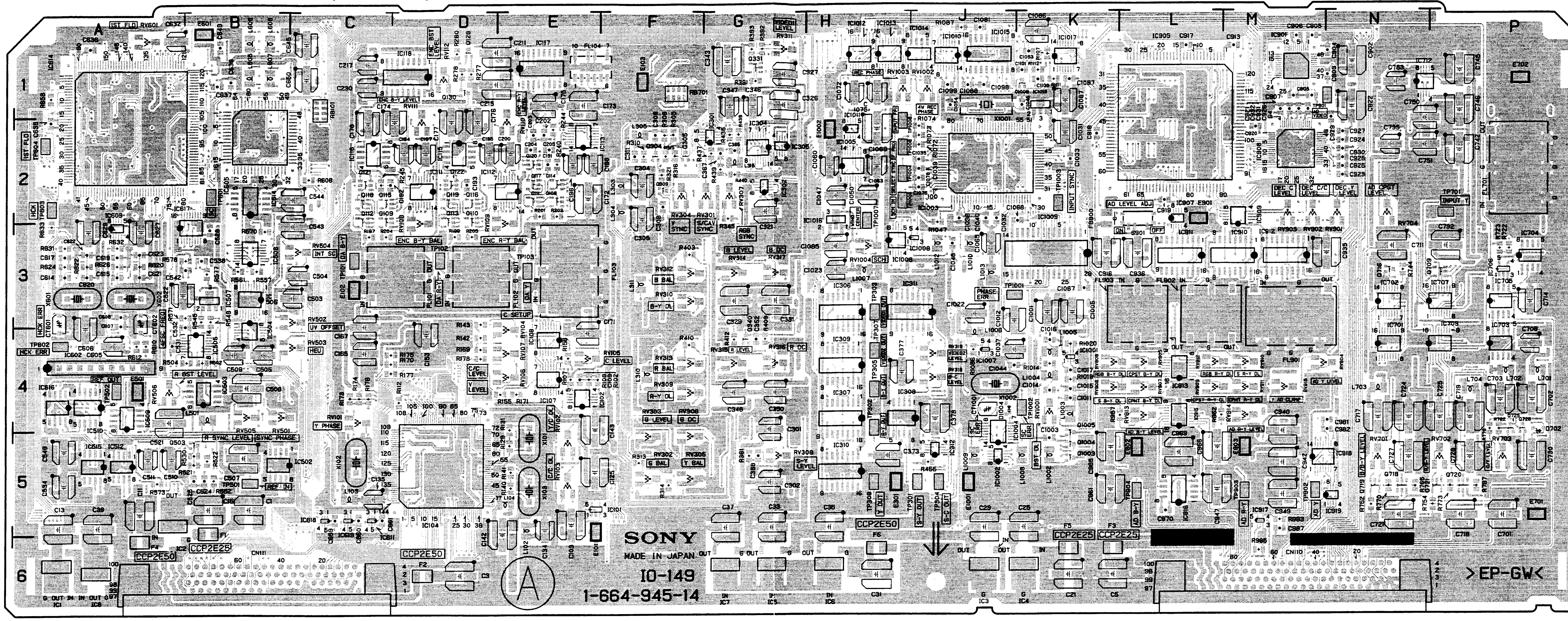

IO-149/149A/149B/149C -A SIDE-

SUFFIX : -14
MODEL DSR-80/80P/60/60P

IO-149/149A/149B/149C (1-664-945-14)

*: B SIDE

CN110	N6
CN111	C6
CT601	A3
CT602	A3
CT1001	J4(#1,#2)
D1	* J6
D2	* K6
D3	* H6
D4	* H6
D5	* H6
D101	* E5
D102	* C5
D103	* E5
D104	* E4
D105	* E2
D106	* D1
D301	* G1
D302	* H3
D501	* B2
D601	* A4
D602	* A4
D701	* N3(#1)
D702	P5(#1,#2)
D703	* N1(#1,#2)
D901	* M1(#1,#2)
D902	* K2(#1,#2)
D904	* L5(#1,#2)
D905	* L5(#1,#2)
D906	* M4(#1,#2)
D1001	* K4(#1,#2)
D1002	* J3(#2)
D1003	* K4(#2)
D1004	J4(#1,#2)
D1005	* H3(#1,#2)
D1006	* J1(#1,#2)
D1007	* J4(#2)
D1008	* J2(#1,#2)
D1009	K1(#1,#2)
E101	E5
E102	C3
E103	F1
E301	H5
E501	A4
E601	B1
E701	P5(#1,#2)
E702	P1(#1,#2)
E901	L2(#1,#2)
E902	L5(#1,#2)
E903	M5(#1,#2)
E1001	J5(#1,#2)
E1002	H2(#1,#2)
FB800	K2(#1,#2)
FL101	D3
FL102	D3
FL103	E3
FL104	E1
FL701	P2(#1,#2)
FL901	M3(#1,#2)
FL902	L3(#1,#2)
FL903	L3(#1,#2)
FL1001	* C5
FL1002	* C5
FL1003	* C5
F1	B5
F2	D6
F3	K6
F4	A6
F5	K6
F6	H6
IC1	A6
IC2	A5
IC3	J6
IC4	K6
IC5	G6
IC6	H6
IC7	G6
IC8	A6
IC101	E5
IC102	E4
IC103	* D5
IC104	D5
IC105	* E5
IC106	* D4(#1,#3)
IC107	E4
IC108	E4
IC109	* D4
IC110	* D4
IC111	D2
IC112	E2
IC113	E2
IC114	* E2
IC115	D2
IC116	C2
IC117	E1
IC118	D1
IC301	G2
IC302	G2
IC304	G2
IC305	G2
IC306	H3
IC307	H4
IC308	H4
IC309	H4
IC310	H5
IC311	J3
IC312	J5
IC501	* B4
IC502	B5
IC503	B4
IC504	B4
IC505	B4
IC506	B3
IC507	B3
IC508	B3
IC509	A4
IC510	A4
IC512	A5
IC513	* B3
IC514	B2
IC515	A5
IC516	A4
IC601	* A4
IC602	A4
IC603	* B2
IC604	* C1
IC605	B2
IC606	* A2
IC607	* A4
IC608	* B2
IC609	A3
IC610	* A3
IC611	C5
IC612	* A1
IC613	* A1
IC614	A2
IC615	* A1
IC616	* A1
IC617	B3
IC618	C5
IC619	C5
IC701	N4(#1,#2)
IC702	N3(#1,#2)
IC703	P4(#1,#2)
IC704	P3(#1,#2)
IC705	P3(#1,#2)
IC706	P3(#1,#2)
IC707	P3(#1,#2)
IC709	P4(#1,#2)
IC712	N1(#1,#2)
IC901	M1(#1,#2)
IC902	* L2(#1,#2)
IC903	* L1(#1,#2)
IC904	* L1(#1,#2)
IC905	L2(#1,#2)
IC906	* L2(#1,#2)
IC907	L2(#1,#2)
IC908	M2(#1,#2)
IC909	M2(#1,#2)
IC910	M3(#1,#2)
IC911	L3(#1,#2)
IC912	M3(#1,#2)
IC913	L4(#1,#2)
IC915	L4(#1)
IC916	L5(#1,#2)
IC917	M5(#1,#2)
IC918	M5(#1,#2)
IC919	N5(#1,#2)
IC1001	K4(#1,#2)
IC1002	J5(#1,#2)
IC1003	J2(#1,#2)
IC1004	J5(#1,#2)
IC1005	H2(#1,#2)
IC1006	H3(#1,#2)
IC1007	J4(#1,#2)
IC1008	J3(#1,#2)
IC1009	K3(#1,#2)
IC1010	J1(#1,#2)
IC1011	H2(#1,#2)
IC1012	H1(#1,#2)
IC1013	H1(#1,#2)
IC1014	J1(#1,#2)
IC1015	J1(#1,#2)
IC1016	H2(#1,#2)
IC1017	K1(#1,#2)
IC1018	K1(#1,#2)
IC1019	* J1(#1,#2)
IC1020	* J1(#1,#2)
IC1021	* K1(#1,#2)
IC1022	* J1(#1,#2)
IC1023	* K1(#1,#2)
IC1024	* J1(#1,#2)
IC1025	* K1(#1,#2)
IC1026	* K1(#1,#2)
L101	* E5
L102	E5
L103	C5
L104	E5
L105	* E5
L106	* D3
L107	* C4
L108	* C3
L109	* E2
L110	* E4
L111	* D1
L112	* C1
L113	* C1
L114	* D1
L115	* E1
L116	* F1(#2)
L117	* D1
L301	* G4
L302	* G5
L303	F2
L304	F2
L305	F2
L306	* F2
L307	* G1
L308	* G1
L309	* G3
L310	F4
L311	F3
L312	* G4
L313	* G4
L314	* G2
L315	G2
L501	B4
L502	* B5
L503	* A5
L504	* C3
L505	* A5
L506	* C2
L507	* A5
L601	* A3
L602	* A3
L603	* C1
L604	* C1
L605	B1
L606	B1
L607	B1
L608	B1
L701	P4(#1,#2)
L702	P4(#1,#2)
L703	N4(#1,#2)
L704	P4(#1,#2)
L901	* N1(#1,#2)
L902	* N1(#1,#2)
L903	* L3(#1,#2)
L904	* M3(#1,#2)
L905	* L3(#1,#2)
L906	* M3(#1,#2)
L907	* N3(#1,#2)
L908	* M5(#1,#2)
L909	* M5(#1,#2)
L910	* M5(#1,#2)
L1001	* K3(#1,#2)
L1002	K5(#1,#2)
L1003	K4(#1,#2)
L1004	K4(#1,#2)
L1005	K4(#1,#2)
L1006	J4(#1,#2)
L1007	H3(#1,#2)
L1008	K5(#1,#2)
L1009	J5(#1,#2)
L1010	J3(#1,#2)
L1011	* K2(#1,#2)
L1012	J3(#1,#2)
L1013	J3(#1,#2)
Q101	* D4
Q102	* D3
Q103	* E3
Q104	* E3
Q105	* C3
Q106	* D3
Q107	* E3
Q108	E2
Q109	C2
Q110	D2
Q111	E2
Q112	C2
Q113	D2
Q114	E2
Q115	C2
Q116	D2
Q117	E2
Q118	C2
Q119	D2
Q120	E2
Q121	C2

 IO-149/149A/149B/149C

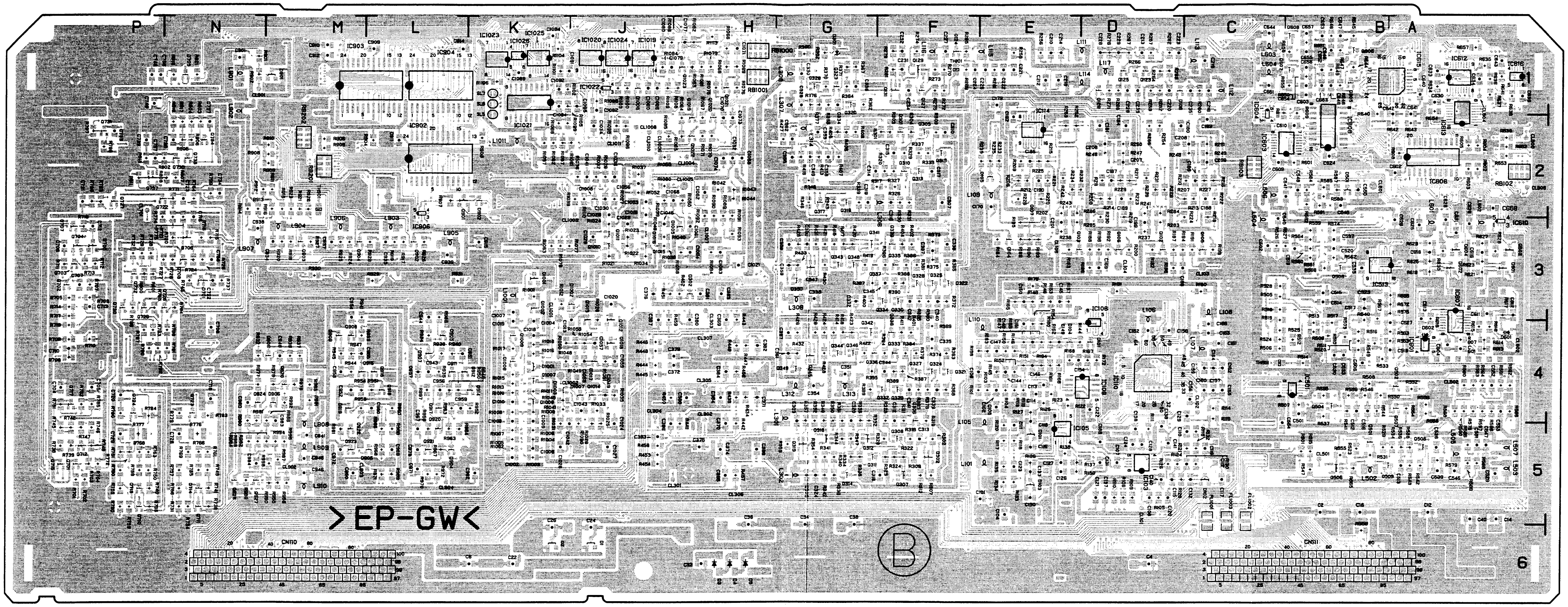

IO-149/149A/149B/149C -B SIDE-

SUFFIX : -14
MODEL DSR-80/80P/60/60P

Q122	D2
Q123	* D1
Q124	* F1
Q125	* D1
Q126	* D1
Q127	* F1
Q128	D1
Q129	* F1
Q130	D1
Q131	* F1
Q301	* F2
Q302	* F5
Q303	* F2
Q304	F2
Q305	F2
Q306	* F4
Q307	* F5
Q308	* F5
Q309	F2
Q310	* F2
Q311	* G5
Q312	* G5
Q313	* F2
Q314	* G5
Q315	* F2
Q316	* G2
Q317	* G2
Q318	* G5
Q319	* G5
Q320	* G1
Q321	* F4
Q322	* F3
Q323	* G1
Q324	* F4
Q325	* F3
Q326	* G1
Q327	* F4
Q328	* F3
Q329	* F4
Q330	* F3
Q331	G1
Q332	* F4
Q333	* F4
Q334	* F3
Q335	* F3
Q336	* G4
Q337	* G3
Q338	* F4
Q339	* F3
Q340	G4
Q341	* G3
Q342	* G4
Q343	* G3
Q344	* G4
Q345	* G4
Q346	* G4
Q347	* G3
Q348	* G3
Q349	* G4
Q350	* G3
Q501	* B5
Q502	* A4
Q503	B5
Q504	* B4
Q505	* A5
Q506	* B5
Q507	* A4
Q508	* B3
Q509	* A5
Q601	* A3
Q602	* A3
Q603	* A3
Q604	* A3
Q605	* B1
Q606	* B1
Q607	* B1
Q608	* B1
Q701	* P5(#1,#2)
Q702	* P3(#1,#2)
Q703	* P3(#1,#2)
Q704	* P3(#1,#2)
Q705	* P3(#1,#2)
Q706	* N3(#1,#2)
Q707	* P3(#1,#2)
Q708	* N3(#1,#2)
Q709	P3(#1,#2)
Q710	* P5(#1,#2)
Q711	* N5(#1,#2)
Q712	* P5(#1,#2)
Q713	* P5(#1,#2)
Q714	* N5(#1,#2)
Q715	* P5(#1,#2)
Q716	N3(#1)
Q717	* P4(#1,#2)
Q718	N5(#1,#2)
Q719	N5(#1,#2)
Q720	P5(#1,#2)
Q721	P5(#1,#2)
Q722	* P2(#1,#2)
Q723	* N4(#1,#2)
Q724	* P4(#1,#2)
Q725	P5(#1,#2)
Q726	P5(#1,#2)
Q727	* P2(#1,#2)
Q728	* N3(#1,#2)
Q729	* P3(#1,#2)
Q730	* P3(#1,#2)
Q731	* P2(#1,#2)
Q732	* P3(#1,#2)
Q733	* N2(#1,#2)
Q734	* N2(#1,#2)
Q735	* N2(#1,#2)
Q737	* P2(#1,#2)
Q901	* L2(#1,#2)
Q902	* L3(#1,#2)
Q903	* M3(#1,#2)
Q904	* M3(#1,#2)
Q905	* L4(#1,#2)
Q906	* M4(#1,#2)
Q907	* L4(#1,#2)
Q908	* M4(#1,#2)
Q909	* M4(#1,#2)
Q911	* L4(#1,#2)
Q912	* L4(#1,#2)
Q914	* K4(#1,#2)
Q915	* M4(#1,#2)
Q916	* L4(#1,#2)
Q917	* L4(#1,#2)
Q918	* L4(#1,#2)
Q919	* M4(#1,#2)
Q920	* L5(#1,#2)
Q921	* L5(#1,#2)
Q922	* M5(#1,#2)
Q923	* M5(#1,#2)
Q924	* N4(#1,#2)
Q925	* M4(#1,#2)
Q926	* N5(#1,#2)
Q927	* N5(#1,#2)
Q1001	* K3(#1,#2)
Q1002	* K3(#1,#2)
Q1003	K5(#1,#2)
Q1004	K5(#1,#2)
Q1005	K5(#1,#2)
Q1006	* K4(#1,#2)
Q1007	* K4(#1,#2)
Q1008	* K4(#1,#2)
Q1009	* K4(#1,#2)
Q1010	* J3(#1,#2)
Q1011	* J3(#1,#2)
Q1012	* J4(#1,#2)
Q1013	* J4(#1,#2)
Q1014	* J4(#1,#2)
Q1015	* J3(#1,#2)
Q1016	* J3(#1,#2)
Q1017	* J4(#1,#2)
Q1018	* J4(#1,#2)
Q1019	* H2(#1,#2)
Q1020	* H2(#1,#2)
Q1021	* H1(#1,#2)
Q1022	* H2(#1,#2)
Q1023	* H1(#1,#2)
RB101	C1
RB102	* A2
RB103	* C2
RB201	* M2(#1,#2)
RB202	* M2(#1,#2)
RB701	F1
RB1000	* H1(#1,#2)
RB1001	* H1(#1,#2)
RV101	C4
RV102	E5
RV103	E5
RV104	E4(#1,#3)
RV105	E4
RV106	E4
RV107	E4
RV108	D3
RV109	E3
RV110	E2
RV111	D2
RV112	D1
RV301	G2
RV302	F5
RV303	F5
RV304	F2
RV305	F5
RV306	F5
RV307	G2
RV308	G5
RV309	F4
RV310	F3
RV311	G1
RV312	F3
RV313	F4
RV314	G3
RV315	G4
RV316	G4
RV317	G3
RV318	J4
RV319	J4
RV501	B4
RV502	C3
RV503	C4
RV504	C3
RV505	B4
RV506	A4
RV601	A1
RV701	N5(#1,#2)
RV702	P5(#1,#2)
RV703	P5(#1,#2)
RV704	N2(#1,#2)
RV901	N2(#1,#2)
RV902	M2(#1,#2)
RV903	M2(#1,#2)
RV904	M4(#1,#2)
RV905	L4(#1,#2)
RV906	K4(#1,#2)
RV907	L4(#1,#2)
RV908	K4(#1,#2)
RV909	L4(#1,#2)
RV910	M4(#1,#2)
RV911	M4(#1,#2)
RV912	L4(#1,#2)
RV913	L4(#1,#2)
RV914	M4(#1,#2)
RV915	M4(#1,#2)
RV1001	K4(#1,#2)
RV1002	J1(#1,#2)
RV1003	H1(#1,#2)
RV1004	H3(#1,#2)
S901	L2(#1,#2)
TH101	* F1
TH901	* M2(#1)
TP101	C3
TP102	D3
TP103	E3
TP301	J5
TP302	H4
TP303	H3
TP304	J5
TP305	H4
TP306	H5
TP307	H4
TP501	B5
TP502	A4
TP601	B2
TP602	A4
TP603	A2
TP604	A2
TP701	P2(#1,#2)
TP901	N1(#1,#2)
TP902	M5(#1,#2)
TP903	M5(#1,#2)
TP904	L5(#1,#2)
TP1001	J3(#1,#2)
TP1002	K4(#1,#2)
TP1003	K2(#1,#2)
TP1004	H2(#1,#2)
TP1005	H2(#1,#2)
TP1006	H2(#1,#2)
TP1007	H2(#1,#2)
TP1008	H2(#1,#2)
X101	E5
X102	C5
X103	E5
X601	A3
X602	A3
X1001	J1(#1,#2)
X1002	J4(#1,#2)

#1: IO-149
#2: IO-149A
#3: IO-149B
#4: IO-149C

NY-SP0754 / DRUCK 59

IO-149B/149C: VIDEO ANALOG OUT PROCESS (DSR-60/60P)
IO-149/149A: VIDEO ANALOG IN/OUT PROCESS (DSR-80/80P)

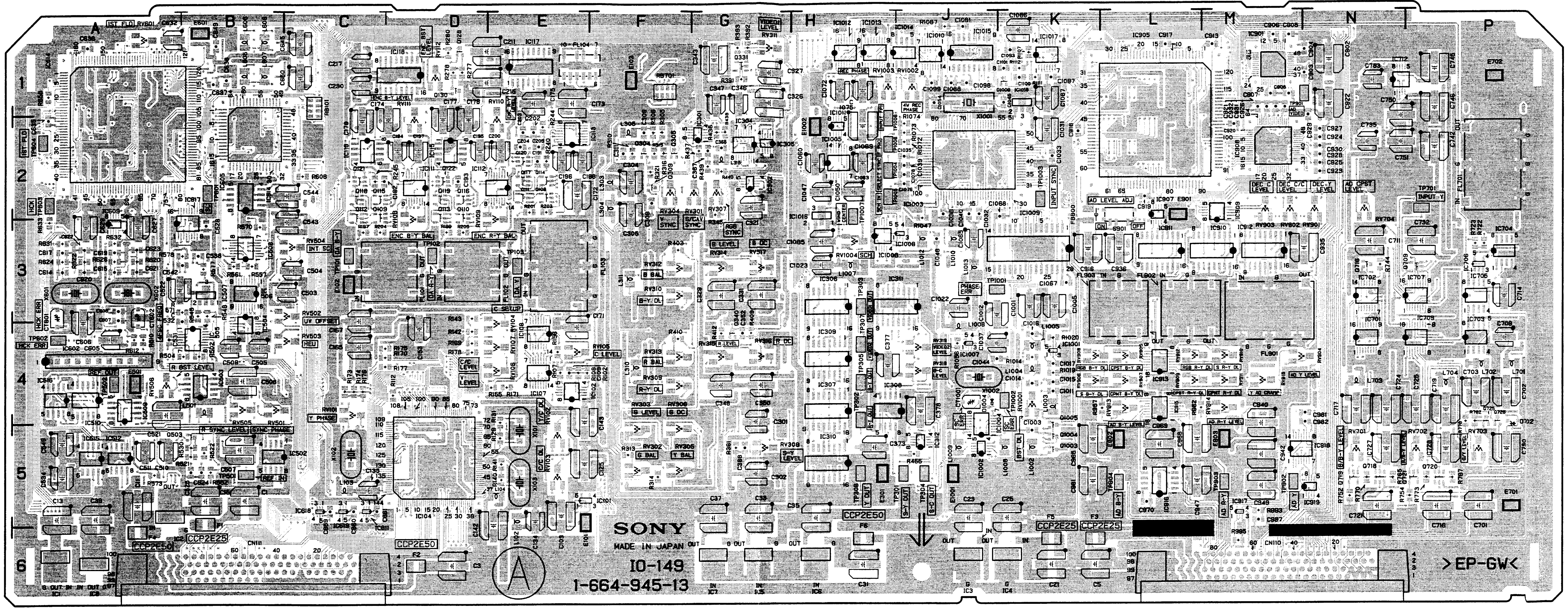

IO-149/149A/149B/149C -A SIDE-

SUFFIX : -13
MODEL DSR-80/80P/60/60P

IO-149/149A/149B/149C (1-664-945-13)

*: B SIDE

CN110	N6
CN111	C6
CT601	A3
CT602	A3
CT1001	J4(#1,#2)
D1	* J6
D2	* K6
D3	* H6
D4	* H6
D5	* H6
D101	* E5
D102	* C5
D103	* E5
D104	* E4
D105	* E2
D106	* D1
D301	* G1
D302	* H3
D501	* B2
D601	* A4
D602	* A4
D701	* N3(#1)
D702	P5(#1,#2)
D703	* N1(#1,#2)
D901	* M1(#1,#2)
D902	* K2(#1,#2)
D904	* L5(#1,#2)
D905	* L5(#1,#2)
D906	* M4(#1,#2)
D1001	* K4(#1,#2)
D1002	* J3(#2)
D1003	* K4(#2)
D1004	J4(#1,#2)
D1005	* H3(#1,#2)
D1006	* J1(#1,#2)
D1007	* J4(#2)
D1008	* J2(#1,#2)
D1009	K1(#1,#2)
E101	E5
E102	C3
E103	F1
E301	H5
E501	A4
E601	B1
E701	P5(#1,#2)
E702	P1(#1,#2)
E901	L2(#1,#2)
E902	L5(#1,#2)
E903	M5(#1,#2)
E1001	J5(#1,#2)
E1002	H2(#1,#2)
FB800	K2(#1,#2)
FL101	D3
FL102	D3
FL103	E3
FL104	E1
FL701	P2(#1,#2)
FL901	M3(#1,#2)
FL902	L3(#1,#2)
FL903	L3(#1,#2)
FL1001	* C5
FL1002	* C5
FL1003	* C5
F1	B5
F2	D6
F3	K6
F4	A6
F5	K6
F6	H6
IC1	A6
IC2	A5
IC3	J6
IC4	K6
IC5	G6
IC6	H6
IC7	G6
IC8	A6
IC101	E5
IC102	E4
IC103	* D5
IC104	D5
IC105	* E5
IC106	* D4(#1,#3)
IC107	E4
IC108	E4
IC109	* D4
IC110	* D4
IC111	D2
IC112	E2
IC113	E2
IC114	* E2
IC115	D2
IC116	C2
IC117	E1
IC118	D1
IC301	G2
IC302	G2
IC304	G2
IC305	G2
IC306	H3
IC307	H4
IC308	H4
IC309	H4
IC310	H5
IC311	J3
IC312	J5
IC501	* B4
IC502	B5
IC503	B4
IC504	B4
IC505	B4
IC506	B3
IC507	B3
IC508	B3
IC509	A4
IC510	A4
IC512	A5
IC513	* B3
IC514	B2
IC515	A5
IC516	A4
IC601	* A4
IC602	A4
IC603	* B2
IC604	* C1
IC605	B2
IC606	* A2
IC607	* A4
IC608	* B2
IC609	A3
IC610	* A3
IC611	C5
IC612	* A1
IC613	* A1
IC614	A2
IC615	* A1
IC616	* A1
IC617	B3
IC618	C5
IC619	C5
IC701	N4(#1,#2)
IC702	N3(#1,#2)
IC703	P4(#1,#2)
IC704	P3(#1,#2)
IC705	P3(#1,#2)
IC706	P3(#1,#2)
IC707	P3(#1,#2)
IC709	P4(#1,#2)
IC712	N1(#1,#2)
IC901	M1(#1,#2)
IC902	* L2(#1,#2)
IC903	* L1(#1,#2)
IC904	* L1(#1,#2)
IC905	L2(#1,#2)
IC906	* L2(#1,#2)
IC907	L2(#1,#2)
IC908	M2(#1,#2)
IC909	M2(#1,#2)
IC910	M3(#1,#2)
IC911	L3(#1,#2)
IC912	M3(#1,#2)
IC913	L4(#1,#2)
IC915	L4(#1)
IC916	L5(#1,#2)
IC917	M5(#1,#2)
IC918	M5(#1,#2)
IC919	N5(#1,#2)
IC1001	K4(#1,#2)
IC1002	J5(#1,#2)
IC1003	J2(#1,#2)
IC1004	J5(#1,#2)
IC1005	H2(#1,#2)
IC1006	H3(#1,#2)
IC1007	J4(#1,#2)
IC1008	J3(#1,#2)
IC1009	K3(#1,#2)
IC1010	J1(#1,#2)
IC1011	H2(#1,#2)
IC1012	H1(#1,#2)
IC1013	H1(#1,#2)
IC1014	J1(#1,#2)
IC1015	J1(#1,#2)
IC1016	H2(#1,#2)
IC1017	K1(#1,#2)
IC1018	K1(#1,#2)
IC1019	* J1(#1,#2)
IC1020	* J1(#1,#2)
IC1021	* K1(#1,#2)
IC1022	* J1(#1,#2)
IC1023	* K1(#1,#2)
IC1024	* J1(#1,#2)
IC1025	* K1(#1,#2)
IC1026	* K1(#1,#2)
L101	* E5
L102	E5
L103	C5
L104	E5
L105	* E5
L106	* D3
L107	* C4
L108	* C3
L109	* E2
L110	* E4
L111	* D1
L112	* C1
L113	* C1
L114	* D1
L115	* E1
L116	* F1(#2)
L117	* D1
L301	* G4
L302	* G5
L303	F2
L304	F2
L305	F2
L306	* F2
L307	* G1
L308	* G1
L309	* G3
L310	F4
L311	F3
L312	* G4
L313	* G4
L314	* G2
L315	G2
L501	B4
L502	* B5
L503	* A5
L504	* C3
L505	* A5
L506	* C2
L507	* A5
L601	* A3
L602	* A3
L603	* C1
L604	* C1
L605	B1
L606	B1
L607	B1
L608	B1
L701	P4(#1,#2)
L702	P4(#1,#2)
L703	N4(#1,#2)
L704	P4(#1,#2)
L901	* N1(#1,#2)
L902	* N1(#1,#2)
L903	* L3(#1,#2)
L904	* M3(#1,#2)
L905	* L3(#1,#2)
L906	* M3(#1,#2)
L907	* N3(#1,#2)
L908	* M5(#1,#2)
L909	* M5(#1,#2)
L910	* M5(#1,#2)
L1001	* K3(#1,#2)
L1002	K5(#1,#2)
L1003	K4(#1,#2)
L1004	K4(#1,#2)
L1005	K4(#1,#2)
L1006	J4(#1,#2)
L1007	H3(#1,#2)
L1008	K5(#1,#2)
L1009	J5(#1,#2)
L1010	J3(#1,#2)
L1011	* K2(#1,#2)
L1012	J3(#1,#2)
L1013	J3(#1,#2)
Q101	* D4
Q102	* D3
Q103	* E3
Q104	* E3
Q105	* C3
Q106	* D3
Q107	* E3
Q108	E2
Q109	C2
Q110	D2
Q111	E2
Q112	C2
Q113	D2
Q114	E2
Q115	C2
Q116	D2
Q117	E2
Q118	C2
Q119	D2
Q120	E2
Q121	C2

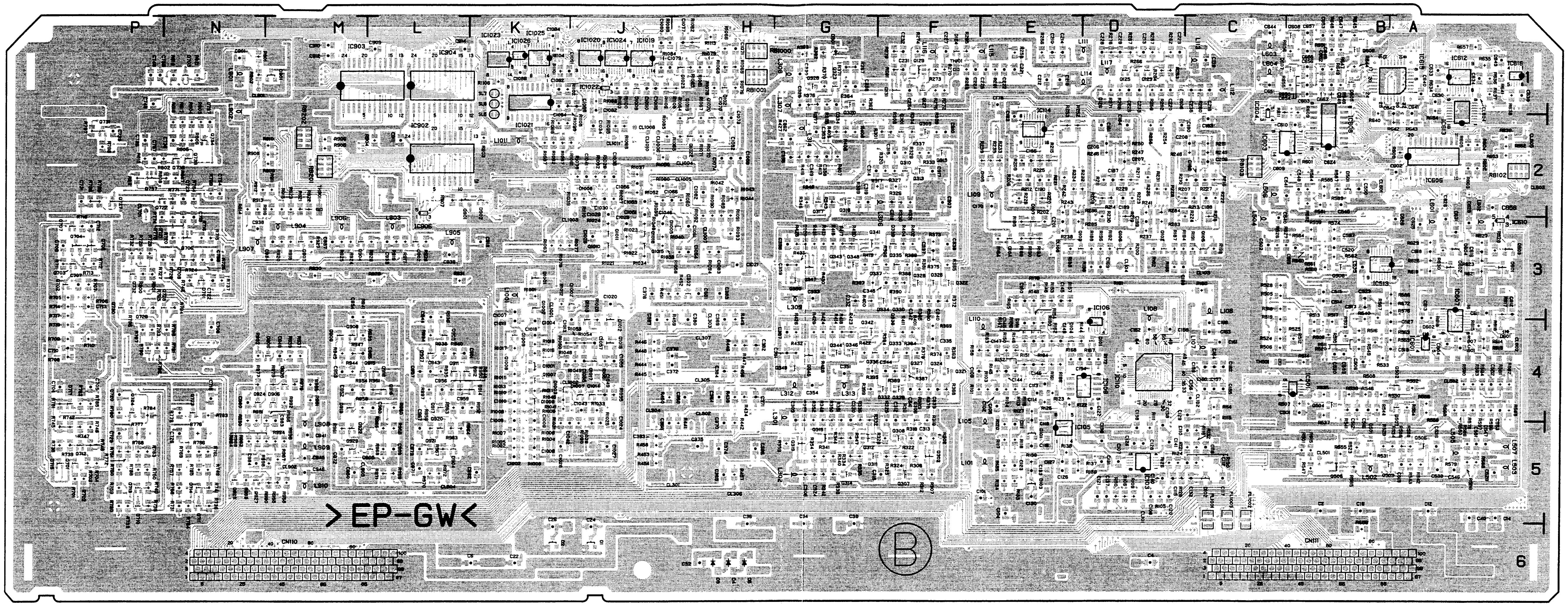

IO-149/149A/149B/149C -B SIDE-

SUFFIX : -13
MODEL DSR-80/80P/60/60P

Q122	D2
Q123	* D1
Q124	* F1
Q125	* D1
Q126	* D1
Q127	* F1
Q128	D1
Q129	* F1
Q130	D1
Q131	* F1
Q301	* F2
Q302	* F5
Q303	* F2
Q304	F2
Q305	F2
Q306	* F4
Q307	* F5
Q308	* F5
Q309	F2
Q310	* F2
Q311	* G5
Q312	* G5
Q313	* F2
Q314	* G5
Q315	* F2
Q316	* G2
Q317	* G2
Q318	* G5
Q319	* G5
Q320	* G1
Q321	* F4
Q322	* F3
Q323	* G1

Q324	* F4
Q325	* F3
Q326	* G1
Q327	* F4
Q328	* F3
Q329	* F4
Q330	* F3
Q331	G1
Q332	* F4
Q333	* F4
Q334	* F3
Q335	* F3
Q336	* G4
Q337	* G3
Q338	* F4
Q339	* F3
Q340	G4
Q341	* G3
Q342	* G4
Q343	* G3
Q344	* G4
Q345	* G4
Q346	* G4
Q347	* G3
Q348	* G3
Q349	* G4
Q350	* G3
Q501	* B5
Q502	* A4
Q503	B5
Q504	* B4
Q505	* A5
Q506	* B5

Q507	* A4
Q508	* B3
Q509	* A5
Q601	* A3
Q602	* A3
Q603	* A3
Q604	* A3
Q605	* B1
Q606	* B1
Q607	* B1
Q608	* B1
Q701	* P5(#1,#2)
Q702	* P3(#1,#2)
Q703	* P3(#1,#2)
Q704	* P3(#1,#2)
Q705	* P3(#1,#2)
Q706	* N3(#1,#2)
Q707	* P3(#1,#2)
Q708	* N3(#1,#2)
Q709	P3(#1,#2)
Q710	* P5(#1,#2)
Q711	* N5(#1,#2)
Q712	* P5(#1,#2)
Q713	* P5(#1,#2)
Q714	* N5(#1,#2)
Q715	* P5(#1,#2)
Q716	N3(#1)
Q717	* P4(#1,#2)
Q718	N5(#1,#2)
Q719	N5(#1,#2)
Q720	P5(#1,#2)
Q721	P5(#1,#2)
Q722	* P2(#1,#2)

Q723	* N4(#1,#2)
Q724	* P4(#1,#2)
Q725	P5(#1,#2)
Q726	P5(#1,#2)
Q727	* P2(#1,#2)
Q728	* N3(#1,#2)
Q729	* P3(#1,#2)
Q730	* P3(#1,#2)
Q731	* P2(#1,#2)
Q732	* P3(#1,#2)
Q733	* N2(#1,#2)
Q734	* N2(#1,#2)
Q735	* N2(#1,#2)
Q737	* P2(#1,#2)
Q901	* L2(#1,#2)
Q902	* L3(#1,#2)
Q903	* M3(#1,#2)
Q904	* M3(#1,#2)
Q905	* L4(#1,#2)
Q906	* M4(#1,#2)
Q907	* L4(#1,#2)
Q908	* M4(#1,#2)
Q909	* M4(#1,#2)
Q911	* L4(#1,#2)
Q912	* L4(#1,#2)
Q914	* K4(#1,#2)
Q915	* M4(#1,#2)
Q916	* L4(#1,#2)
Q917	* L4(#1,#2)
Q918	* L4(#1,#2)
Q919	* M4(#1,#2)
Q920	* L5(#1,#2)
Q921	* L5(#1,#2)

Q922	* M5(#1,#2)
Q923	* M5(#1,#2)
Q924	* N4(#1,#2)
Q925	* M4(#1,#2)
Q926	* N5(#1,#2)
Q927	* N5(#1,#2)
Q1001	* K3(#1,#2)
Q1002	* K3(#1,#2)
Q1003	K5(#1,#2)
Q1004	K5(#1,#2)
Q1005	K5(#1,#2)
Q1006	* K4(#1,#2)
Q1007	* K4(#1,#2)
Q1008	* K4(#1,#2)
Q1009	* K4(#1,#2)
Q1010	* J3(#1,#2)
Q1011	* J3(#1,#2)
Q1012	* J4(#1,#2)
Q1013	* J4(#1,#2)
Q1014	* J4(#1,#2)
Q1015	* J3(#1,#2)
Q1016	* J3(#1,#2)
Q1017	* J4(#1,#2)
Q1018	* J4(#1,#2)
Q1019	* H2(#1,#2)
Q1020	* H2(#1,#2)
Q1021	* H1(#1,#2)
Q1022	* H2(#1,#2)
Q1023	* H1(#1,#2)
RB101	C1
RB102	* A2
RB103	* C2

RB201	* M2(#1,#2)
RB202	* M2(#1,#2)
RB701	F1
RB1000	* H1(#1,#2)
RB1001	* H1(#1,#2)
RV101	C4
RV102	E5
RV103	E5
RV104	E4(#1,#3)
RV105	E4
RV106	E4
RV107	E4
RV108	D3
RV109	E3
RV110	E2
RV111	D2
RV112	D1
RV301	G2
RV302	F5
RV303	F5
RV304	F2
RV305	F5
RV306	F5
RV307	G2
RV308	G5
RV309	F4
RV310	F3
RV311	G1
RV312	F3
RV313	F4
RV314	G3
RV315	G4

RV316	G4
RV317	G3
RV318	J4
RV319	J4
RV501	B4
RV502	C3
RV503	C4
RV504	C3
RV505	B4
RV506	A4
RV601	A1
RV701	N5(#1,#2)
RV702	P5(#1,#2)
RV703	P5(#1,#2)
RV704	N2(#1,#2)
RV901	N2(#1,#2)
RV902	M2(#1,#2)
RV903	M2(#1,#2)
RV904	M4(#1,#2)
RV905	L4(#1,#2)
RV906	K4(#1,#2)
RV907	L4(#1,#2)
RV908	K4(#1,#2)
RV909	L4(#1,#2)
RV910	M4(#1,#2)
RV911	M4(#1,#2)
RV912	L4(#1,#2)
RV913	L4(#1,#2)
RV914	M4(#1,#2)
RV915	M4(#1,#2)
RV1001	K4(#1,#2)
RV1002	J1(#1,#2)
RV1003	H1(#1,#2)

RV1004	H3(#1,#2)
S901	L2(#1,#2)
TH101	* F1
TH901	* M2(#1)
TP101	C3
TP102	D3
TP103	E3
TP301	J5
TP302	H4
TP303	H3
TP304	J5
TP305	H4
TP306	H5
TP307	H4
TP501	B5
TP502	A4
TP601	B2
TP602	A4
TP603	A2
TP604	A2
TP701	P2(#1,#2)
TP901	N1(#1,#2)
TP902	M5(#1,#2)
TP903	M5(#1,#2)
TP904	L5(#1,#2)
TP1001	J3(#1,#2)
TP1002	K4(#1,#2)
TP1003	K2(#1,#2)
TP1004	H2(#1,#2)
TP1005	H2(#1,#2)

TP1006	H2(#1,#2)
TP1007	H2(#1,#2)
TP1008	H2(#1,#2)
X101	E5
X102	C5
X103	E5
X601	A3
X602	A3
X1001	J1(#1,#2)
X1002	J4(#1,#2)

#1: IO-149
#2: IO-149A
#3: IO-149B
#4: IO-149C

IO-149B/149C: VIDEO ANALOG OUT PROCESS (DSR-60/60P)
IO-149/149A: VIDEO ANALOG IN/OUT PROCESS (DSR-80/80P)

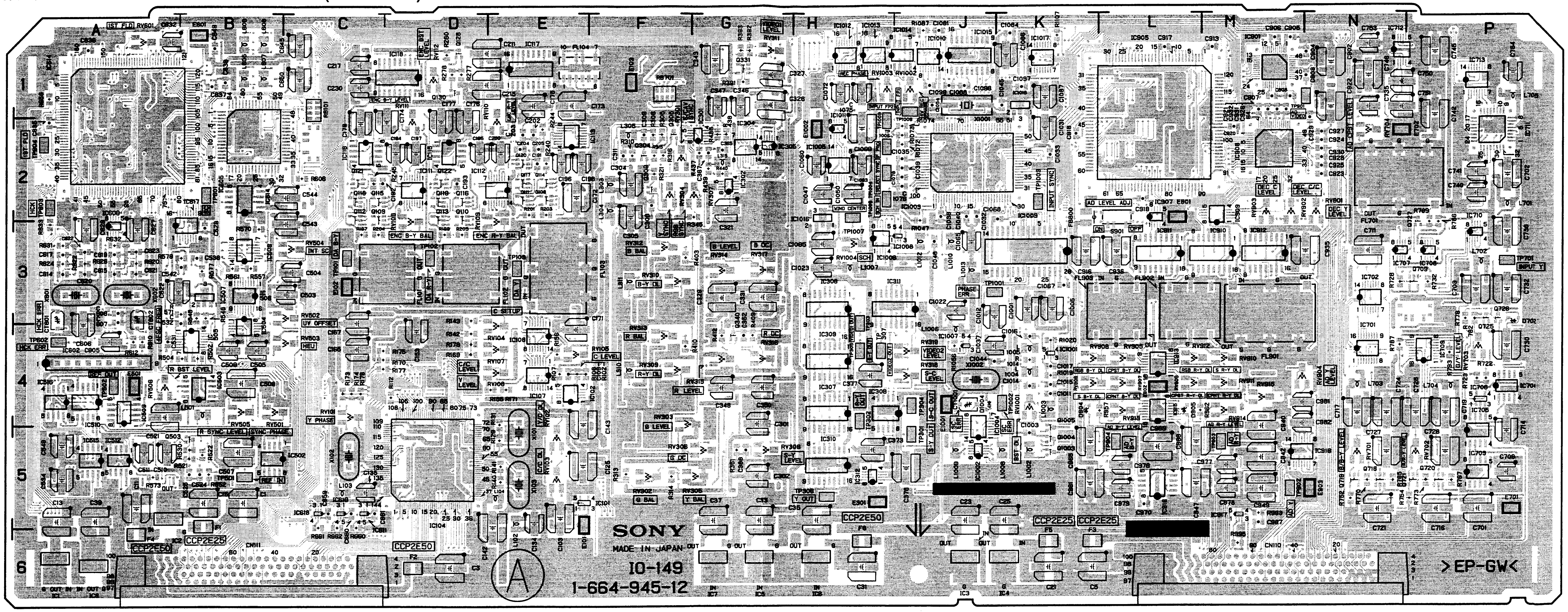

IO-149/149A/149B/149C -A SIDE-

SUFFIX : -12
MODEL DSR-80/80P/60/60P

IO-149/149A/149B/149C (1-664-945-12)

*: B SIDE

CN110	N6
CN111	C6
CT601	A4
CT602	A4
CT1001	J4(#1,#2)
D1	* J6
D2	* K6
D3	* H6
D4	* H6
D5	* H6
D101	* E5
D102	* C5
D103	* E5
D104	* E4
D105	* E2
D106	* D2
D301	* G2
D302	* H3
D501	* B2
D601	* A4
D602	* A4
D701	* N3(#1)
D702	P4(#1,#2)
D703	* N2(#1,#2)
D901	* M2(#1,#2)
D902	* K2(#1,#2)
D904	K4(#1,#2)
D905	L4(#1,#2)
D906	* M4(#1,#2)
D1001	* K4(#1,#2)
D1002	* J3(#2)
D1003	* K4(#2)
D1004	J4(#1,#2)
D1005	* H3(#1,#2)
D1006	* J2(#1,#2)
D1007	* J4(#2)
E101	E5
E102	C4
E103	F4
E301	H5
E501	A4
E601	B4
E701	P5(#1,#2)
E702	N4(#1,#2)
E901	L4(#1,#2)
E902	L4(#1,#2)
E903	N5(#1,#2)
E1001	J4(#1,#2)
E1002	H4(#1,#2)
FB800	K4(#1,#2)
FL101	D4
FL102	D4
FL103	E4
FL104	E4
FL701	N4(#1,#2)
FL901	M4(#1,#2)
FL902	L4(#1,#2)
FL903	L4(#1,#2)
FL1001	* C5
FL1002	* C5
FL1003	* C5
F1	B5
F2	D6
F3	K6
F4	A6
F5	K6
F6	H6
IC1	A6
IC2	A5
IC3	J6
IC4	K6
IC5	G6
IC6	H6
IC7	G6
IC8	A6
IC101	E5
IC102	E4
IC103	* D5
IC104	D5
IC105	* E5
IC106	* D4(#1,#3)
IC107	E4
IC108	E4
IC109	* D4
IC110	* D4
IC111	D4
IC112	E4
IC113	E4
IC114	* E2
IC115	D4
IC116	C4
IC117	E4
IC118	D4
IC301	G4
IC302	G4
IC304	G4
IC305	G4
IC306	H4
IC307	H4
IC308	H4
IC309	H4
IC310	H5
IC311	J4
IC312	H5
IC501	* B4
IC502	B5
IC503	B4
IC504	B4
IC505	B4
IC506	B4
IC507	B4
IC508	B4
IC509	A4
IC510	A4
IC512	A5
IC513	* B3
IC514	B4
IC515	A5
IC516	A4
IC601	* A4
IC602	A4
IC603	* B2
IC604	* C2
IC605	B4
IC606	* A2
IC607	* A4
IC608	* B2
IC609	A4
IC610	* A3
IC611	C5
IC612	* A2
IC613	* A2
IC614	A4
IC615	* A2
IC616	* A2
IC617	B4
IC618	C5
IC619	C5
IC701	N4(#1,#2)
IC702	N4(#1,#2)
IC703	P5(#1,#2)
IC704	P4(#1,#2)
IC705	P5(#1,#2)
IC706	P4(#1,#2)
IC707	N4(#1,#2)
IC708	P4(#1,#2)
IC709	P4(#1,#2)
IC710	P4(#1,#2)
IC711	P4(#1,#2)
IC712	N4(#1,#2)
IC713	P4(#1)
IC901	M4(#1,#2)
IC902	* L2(#1,#2)
IC903	* L2(#1,#2)
IC904	* L2(#1,#2)
IC905	L4(#1,#2)
IC906	* L2(#1,#2)
IC907	L4(#1,#2)
IC908	M4(#1,#2)
IC909	M4(#1,#2)
IC910	M4(#1,#2)
IC911	L4(#1,#2)
IC912	M4(#1,#2)
IC913	L4(#1,#2)
IC915	L4(#1,#2)
IC916	L5(#1,#2)
IC917	M5(#1,#2)
IC918	M5(#1,#2)
IC1001	K4(#1,#2)
IC1002	J5(#1,#2)
IC1003	J4(#1,#2)
IC1004	J5(#1,#2)
IC1005	H4(#1,#2)
IC1006	H4(#1,#2)
IC1007	J4(#1,#2)
IC1008	J4(#1,#2)
IC1009	K4(#1,#2)
IC1010	J4(#1,#2)
IC1011	H4(#1,#2)
IC1012	H4(#1,#2)
IC1013	H4(#1,#2)
IC1014	J4(#1,#2)
IC1015	J4(#1,#2)
IC1016	H4(#1,#2)
IC1017	K4(#1,#2)
IC1018	K4(#1,#2)
IC1019	* J2(#1,#2)
IC1020	* J2(#1,#2)
IC1021	* K2(#1,#2)
IC1022	* J2(#1,#2)
IC1023	* K2(#1,#2)
IC1024	* J2(#1,#2)
IC1025	* K2(#1,#2)
IC1026	* K2(#1,#2)
L101	E5
L102	E5
L103	C5
L104	E5
L105	* E5
L106	* D3
L107	* C4
L108	* C3
L109	* E2
L110	* E4
L111	* D2
L112	* C2
L113	* C2
L114	* D2
L115	* E2
L116	* F2(#2,#4)
L117	* D2
L301	* G4
L302	* G5
L303	F4
L304	F4
L305	F4
L306	* F2
L307	* G2
L308	* G2
L309	* G3
L310	F4
L311	F4
L312	* G4
L313	* G4
L314	* G2
L315	G4
L501	B4
L502	* B5
L503	* A5
L504	* C3
L505	* A5
L506	* C2
L507	* A5
L601	* A3
L602	* A3
L603	* C2
L604	* C2
L605	B4
L606	B4
L607	B4
L608	B4
L701	P4(#1,#2)
L702	P4(#1,#2)
L703	N4(#1,#2)
L704	P4(#1,#2)
L705	P4(#1)
L901	* N2(#1,#2)
L902	* N2(#1,#2)
L903	* L3(#1,#2)
L904	* M3(#1,#2)
L905	* L3(#1,#2)
L906	* M3(#1,#2)
L907	* N3(#1,#2)
L908	* M5(#1,#2)
L909	* M5(#1,#2)
L910	* M5(#1,#2)
L1001	* K3(#1,#2)
L1002	K5(#1,#2)
L1003	K4(#1,#2)
L1004	K4(#1,#2)
L1005	K4(#1,#2)
L1006	J4(#1,#2)
L1007	H4(#1,#2)
L1008	K5(#1,#2)
L1009	J5(#1,#2)
L1010	J4(#1,#2)
L1011	* K2(#1,#2)
L1012	J4(#1,#2)
L1013	J4(#1,#2)
Q101	* D4
Q102	* D3
Q103	* E3
Q104	* E3
Q105	* C3
Q106	* D3
Q107	* E3
Q108	E4
Q109	C4
Q110	D4
Q111	E4
Q112	C4
Q113	D4
Q114	E4
Q115	C4
Q116	D4
Q117	E4
Q118	C4
Q119	D4
Q120	E4

 IO-149/149A/149B/149C

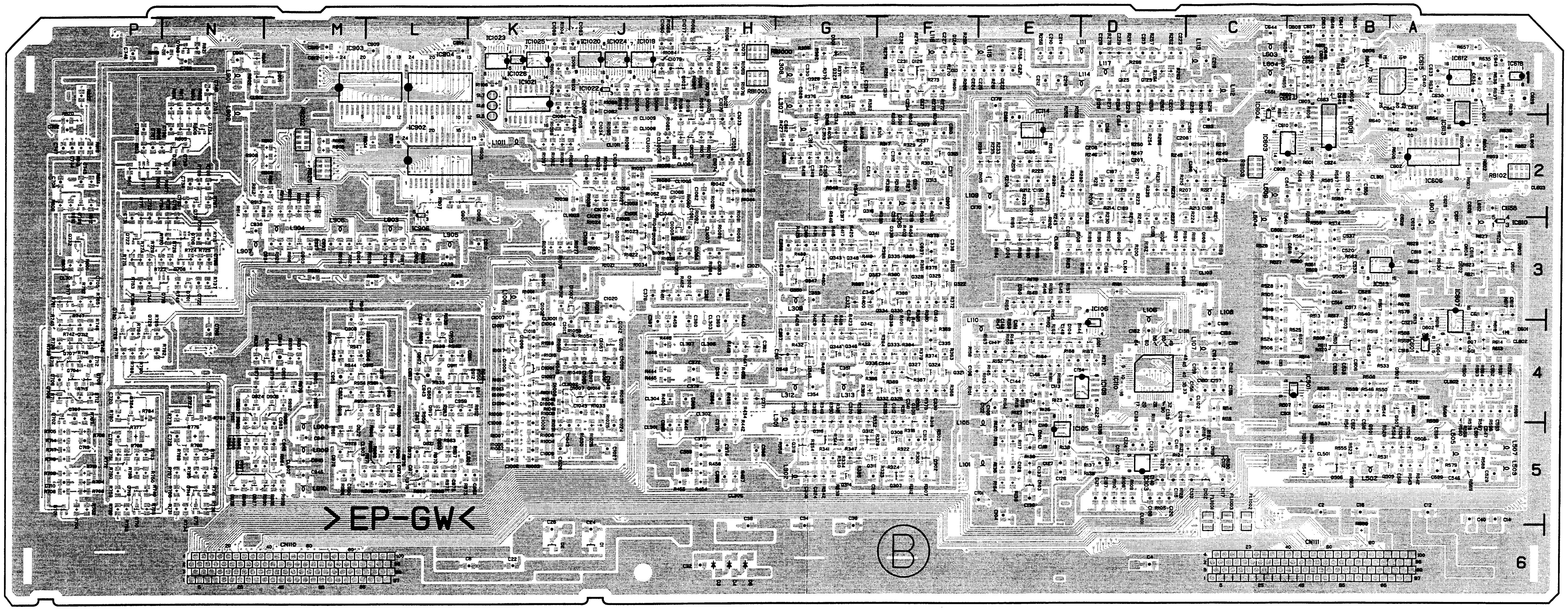

IO-149/149A/149B/149C -B SIDE-

SUFFIX : -12

MODEL DSR-80/80P/60/60P

Q121	C4
Q122	D4
Q123	* D2
Q124	* F2
Q125	* D2
Q126	* D2
Q127	* F2
Q128	D4
Q129	* F2
Q130	D4
Q131	* F2
Q301	* F2
Q302	* F5
Q303	* F2
Q304	F4
Q305	F4
Q306	* F4
Q307	* F5
Q308	* F5
Q309	F4
Q310	* F2
Q311	* G5
Q312	* G5
Q313	* F2
Q314	* G5
Q315	* F2
Q316	* G2
Q317	* G2
Q318	* G5
Q319	* G5
Q320	* G2
Q321	* F4
Q322	* F3
Q323	* G2
Q324	* F4
Q325	* F3
Q326	* G2
Q327	* F4
Q328	* F3
Q329	* F4
Q330	* F3
Q331	G4
Q332	* F4
Q333	* F4
Q334	* F3
Q335	* F3
Q336	* G4
Q337	* G3
Q338	* F4
Q339	* F3
Q340	G4
Q341	* G3
Q342	* G4
Q343	* G3
Q344	* G4
Q345	* G4
Q346	* G4
Q347	* G3
Q348	* G3
Q349	* G4
Q350	* G3
Q501	* B5
Q502	* A4
Q503	B5
Q504	* B4
Q505	* A5
Q506	* B5
Q507	* A4
Q508	* B3
Q509	* A5
Q601	* A3
Q602	* A3
Q603	* A3
Q604	* A3
Q605	* B2
Q606	* B2
Q607	* B2
Q608	* B2
Q701	* P5(#1,#2)
Q702	* P4(#1,#2)
Q703	* P4(#1,#2)
Q704	* P4(#1,#2)
Q705	* P4(#1,#2)
Q706	* N3(#1,#2)
Q707	* P4(#1,#2)
Q708	* N3(#1,#2)
Q709	* P4(#1,#2)
Q710	* P5(#1,#2)
Q711	* N5(#1,#2)
Q712	* P4(#1,#2)
Q713	* P5(#1,#2)
Q714	* N5(#1,#2)
Q715	* P4(#1,#2)
Q716	* N3(#1)
Q717	* P3(#1,#2)
Q718	N5(#1,#2)
Q719	N5(#1,#2)
Q720	P5(#1,#2)
Q721	P5(#1,#2)
Q722	* P3(#1,#2)
Q723	* N4(#1,#2)
Q724	* P4(#1,#2)
Q725	P4(#1,#2)
Q726	P4(#1,#2)
Q727	P4(#1,#2)
Q728	* P4(#1,#2)
Q729	* P4(#1,#2)
Q730	* P3(#1,#2)
Q731	* N2(#1,#2)
Q732	* P3(#1,#2)
Q733	* N2(#1,#2)
Q734	* N2(#1,#2)
Q735	* N2(#1,#2)
Q736	* P2(#1,#2)
Q737	* P2(#1,#2)
Q901	* L2(#1,#2)
Q902	* L3(#1,#2)
Q903	* M3(#1,#2)
Q904	* M3(#1,#2)
Q905	* L4(#1,#2)
Q906	* M4(#1,#2)
Q907	* L4(#1,#2)
Q908	* M4(#1,#2)
Q909	* M4(#1,#2)
Q911	* L4(#1,#2)
Q912	* L4(#1,#2)
Q914	* K4(#1,#2)
Q915	* M4(#1,#2)
Q916	* L4(#1,#2)
Q917	* L4(#1,#2)
Q918	* L4(#1,#2)
Q919	* M4(#1,#2)
Q920	* L5(#1,#2)
Q921	* L5(#1,#2)
Q922	* M5(#1,#2)
Q923	* M5(#1,#2)
Q924	* N4(#1,#2)
Q925	* M4(#1,#2)
Q926	* N5(#1,#2)
Q927	* N5(#1,#2)
Q1001	* K3(#1,#2)
Q1002	* K3(#1,#2)
Q1003	K5(#1,#2)
Q1004	K5(#1,#2)
Q1005	K5(#1,#2)
Q1006	* K4(#1,#2)
Q1007	* K4(#1,#2)
Q1008	* K4(#1,#2)
Q1009	* K4(#1,#2)
Q1010	* J3(#1,#2)
Q1011	* J3(#1,#2)
Q1012	* J4(#1,#2)
Q1013	* J4(#1,#2)
Q1014	* J4(#1,#2)
Q1015	* J3(#1,#2)
Q1016	* J3(#1,#2)
Q1017	* J4(#1,#2)
Q1018	* J4(#1,#2)
Q1019	* H2(#1,#2)
Q1020	* H2(#1,#2)
Q1021	* H2(#1,#2)
Q1022	* H2(#1,#2)
Q1023	* H2(#1,#2)
RB101	C4
RB102	* A2
RB103	* C2
RB201	* M2(#1,#2)
RB202	* M2(#1,#2)
RB701	F4
RB1000	* H2(#1,#2)
RB1001	* H2(#1,#2)
RV101	C4
RV102	E5
RV103	E5
RV104	E4(#1,#2,#3)
RV105	E4
RV106	E4
RV107	E4
RV108	D4
RV109	E4
RV110	E4
RV111	D4
RV112	D4
RV301	F4
RV302	F5
RV303	F4
RV304	F4
RV305	G5
RV306	G5
RV307	G4
RV308	G5
RV309	F4
RV310	F4
RV311	G4
RV312	F4
RV313	F4
RV314	G4
RV315	G4
RV316	G4
RV317	G4
RV318	J4
RV319	J4
RV501	B4
RV502	C4
RV503	C4
RV504	C4
RV505	B4
RV506	A4
RV601	A4
RV701	N5(#1,#2)
RV702	P5(#1,#2)
RV703	P4(#1,#2)
RV704	N4(#1,#2)
RV901	N4(#1,#2)
RV902	M4(#1,#2)
RV903	M4(#1,#2)
RV904	M4(#1,#2)
RV905	L4(#1,#2)
RV906	K4(#1,#2)
RV907	L4(#1,#2)
RV908	K4(#1,#2)
RV909	L4(#1,#2)
RV910	M4(#1,#2)
RV911	M4(#1,#2)
RV912	L4(#1,#2)
RV913	L4(#1,#2)
RV914	M4(#1,#2)
RV915	M4(#1,#2)
RV1001	K4(#1,#2)
RV1002	J4(#1,#2)
RV1003	H4(#1,#2)
RV1004	H4(#1,#2)
S901	L4(#1,#2)
TH101	* F2
TH901	* M2(#1)
TP101	C4
TP102	D4
TP103	E4
TP301	J5
TP302	H4
TP303	H4
TP304	J4
TP305	H4
TP306	H5
TP307	H4
TP501	B5
TP502	A4
TP601	B4
TP602	A4
TP603	A4
TP604	A4
TP701	P4(#1,#2)
TP901	N4(#1,#2)
TP902	M5(#1,#2)
TP903	M5(#1,#2)
TP904	L5(#1,#2)
TP1001	J4(#1,#2)
TP1002	K4(#1,#2)
TP1003	K4(#1,#2)
TP1004	H4(#1,#2)
TP1005	H4(#1,#2)
TP1006	H4(#1,#2)
TP1007	H4(#1,#2)
TP1008	J4(#1,#2)
TP1009	H4(#1,#2)
X101	E5
X102	C5
X103	E5
X601	A4
X602	A4
X1001	J4(#1,#2)
X1002	J4(#1,#2)

#1: IO-149
#2: IO-149A
#3: IO-149B
#4: IO-149C

12-15 (a)

IO-149B/149C: VIDEO ANALOG OUT PROCESS

DSR-60/60P

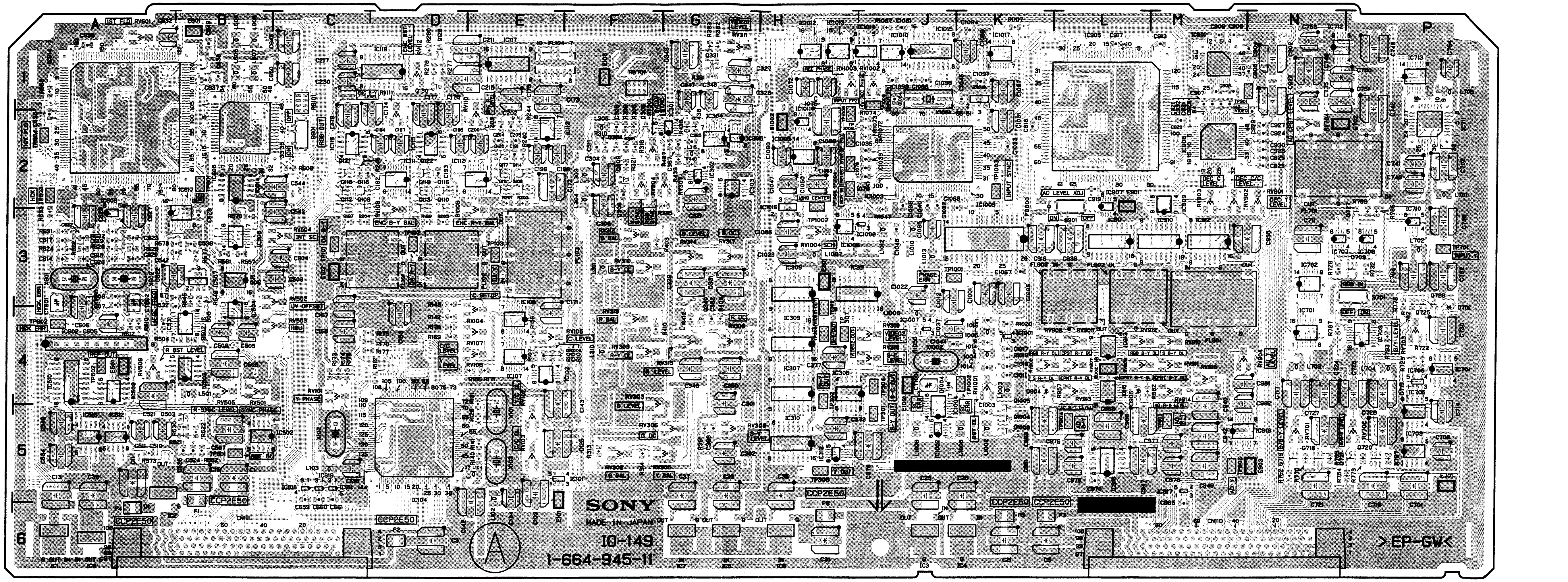

IO-149B/149C -A SIDE-

SUFFIX : -11

MODEL DSR-60/60P

IO-149B/149C (1-664-945-11)

*: B SIDE

CN110	N6
CN111	C6
CT601	A3
CT602	A3
D1	* J6
D2	* K6
D3	* H6
D4	* H6
D5	* H6
D101	* E5
D102	* C5
D103	* E5
D104	* E4
D105	* E2
D106	* D1
D301	* G1
D302	* H3
D501	* B2
D601	* A4
D602	* A4
E101	E5
E102	C3
E103	F1
E301	H3
E501	A4
E601	B1
FL101	D3
FL102	D3
FL103	E3
FL104	E1
FL1001	* C5
FL1002	* C5
FL1003	* C5
F1	B5
F2	D6
F3	K6
F4	A6
F5	K6
F6	H6
IC1	A6
IC2	A5
IC3	J6
IC4	K6
IC5	G6
IC6	H6
IC7	G6
IC8	A6
IC101	E5
IC102	E4
IC103	* D5
IC104	D5
IC105	* E5
IC106	* D4 (PAL ONLY)
IC107	E4
IC108	E4
IC109	* D4
IC110	* D4
IC111	D2
IC112	E2
IC113	E2
IC114	* E2
IC115	D2
IC116	C2
IC117	E1
IC118	D1
IC301	G2
IC302	G2
IC303	G2
IC304	G2
IC305	G2
IC306	H3
IC307	H4
IC308	H4
IC309	H4
IC310	H5
IC311	J3
IC312	H5
IC501	* B4
IC502	B5
IC503	B4
IC504	B4
IC505	B4
IC506	B3
IC507	B3
IC508	B3
IC509	A4
IC510	A4
IC512	A5
IC513	* B3
IC514	B2
IC515	A5
IC601	* A4
IC602	A4
IC603	* B2
IC604	* C1
IC605	B2
IC606	* A2
IC607	* A4
IC608	* B2
IC609	A3
IC610	* A3
IC611	C5
IC612	* A1
IC613	* A1
IC614	A2
IC615	* A1
IC616	* A1
IC617	B3
IC618	C5
IC619	C5
L101	* E5
L102	E5
L103	C5
L104	E5
L105	* E5
L106	* D3
L107	* C4
L108	* C3
L109	* E2
L110	* E4
L111	* D1
L112	* C1
L113	* C1
L114	* D1
L115	* E1
L116	* F1 (NTSC ONLY)
L117	* D1
L301	* G4
L302	* G5
L303	F2
L304	F2
L305	F2
L306	* F2
L307	* G1
L308	* G1
L309	* G3
L310	F4
L311	F3
L312	* G4
L313	* G4
L314	* G2
L315	G2
L501	B4
L502	* B5
L503	* A5
L504	* C3
L505	* A5
L506	* C2
L507	* A5
L601	* A3
L602	* A3
L603	* C1
L604	* C1
L605	B1
L606	B1
L607	B1
L608	B1
Q101	* D4
Q102	* D3
Q103	* E3
Q104	* E3
Q105	* C3
Q106	* D3
Q107	* E3
Q108	E2
Q109	C2
Q110	D2
Q111	E2
Q112	C2
Q113	D2
Q114	E2
Q115	C2
Q116	D2
Q117	E2
Q118	C2
Q119	D2
Q120	E2
Q121	C2
Q122	D2
Q123	* D1
Q124	* F1
Q125	* D1
Q126	* D1
Q127	* F1
Q128	D1
Q129	* F1
Q130	D1
Q131	* F1
Q301	* F2
Q302	* F5
Q303	* F2
Q304	F2
Q305	F2
Q306	* F4
Q307	* F5
Q308	* F5
Q309	F2
Q310	* F2
Q311	* G5
Q312	* G5
Q313	* F2
Q314	* G5
Q315	* F2
Q316	* G2
Q317	* G2
Q318	* G5
Q319	* G5
Q320	* G1
Q321	* F4
Q322	* F3
Q323	* G1
Q324	* F4
Q325	* F3
Q326	* G1
Q327	* F4
Q328	* F3
Q329	* F4
Q330	* F3
Q331	G1
Q332	* F4
Q333	* F4
Q334	* F3
Q335	* F3
Q336	* G4
Q337	* G3
Q338	* F4
Q339	* F3
Q340	G4
Q341	* G3
Q342	* G4
Q343	* G3
Q344	* G4
Q345	* G4
Q346	* G4
Q347	* G3
Q348	* G3
Q349	* G4
Q350	* G3
Q501	* B5
Q502	* A4
Q503	B5
Q504	* B4
Q505	* A5
Q506	* B5
Q507	* A4
Q508	* B3
Q509	* A5
Q601	* A3
Q602	* A3
Q603	* A3
Q604	* A3
Q605	* B1
Q606	* B1
Q607	* B1
Q608	* B1
RB101	C1
RB102	* A2
RB103	* C2
RB701	F1
RV101	C4
RV102	E5
RV103	E5
RV104	E4 (PAL ONLY)
RV105	E4
RV106	E4
RV107	E4
RV108	D3
RV109	E3
RV110	E2

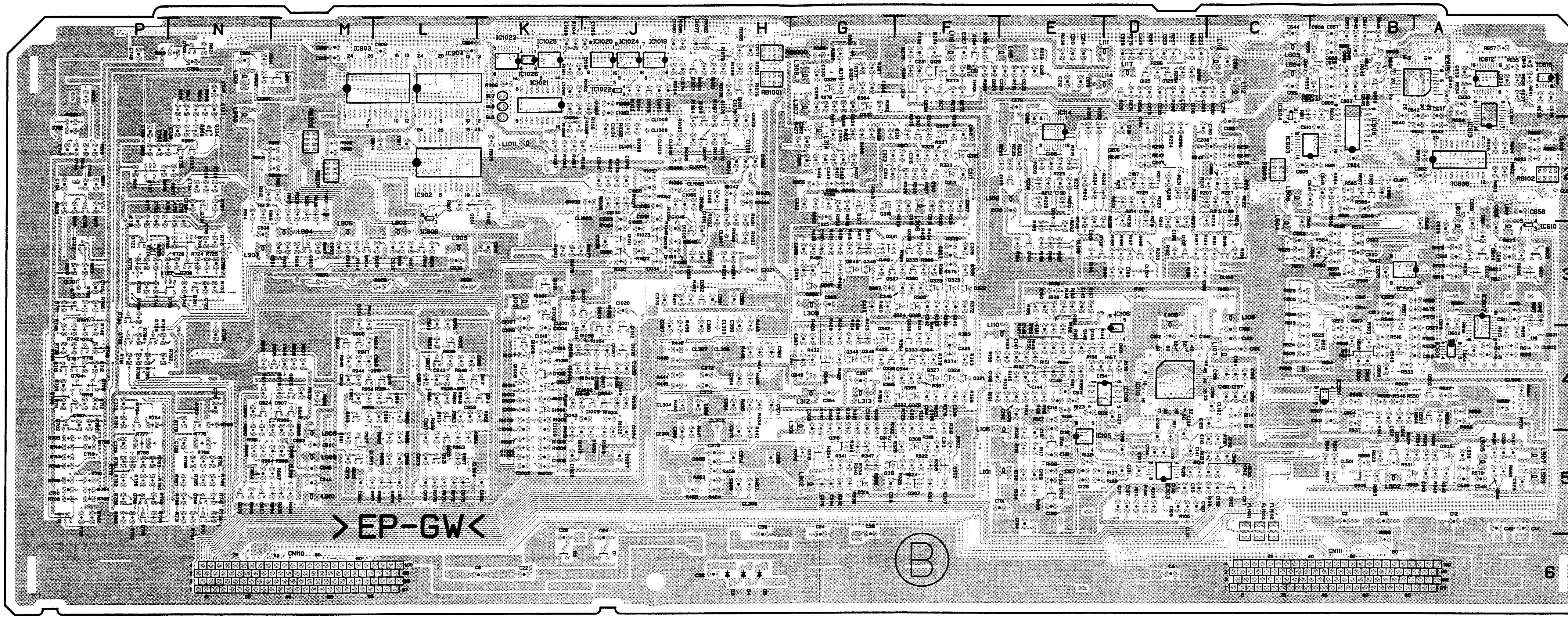

IO-149B/149C -B SIDE-

SUFFIX : -11

MODEL DSR-60/60P

RV111	D2
RV112	D1
RV301	F2
RV302	F5
RV303	F4
RV304	F2
RV305	G5
RV306	G5
RV307	G2
RV308	G5
RV309	F4
RV310	F3
RV311	G1
RV312	F3
RV313	F4
RV314	G3
RV315	G4
RV316	G4
RV317	G3
RV318	J4
RV319	J4
RV501	B4
RV502	C3
RV503	C4
RV504	C3
RV505	B4
RV506	A4
RV601	A1
S601	C2

TH101	* F1
TH501	* C4 (PAL ONLY)
TP101	C3
TP102	D3
TP103	E3
TP301	J5
TP302	H4
TP303	H4
TP304	J4
TP305	H4
TP306	H5
TP307	H4
TP501	B5
TP502	A4
TP601	B2
TP602	A4
TP603	A2
TP604	A2
X101	E5
X102	C5
X103	E5
X601	A3
X602	A3

NY-SP0754 / DRUCK 65

 KY-336/336B

KY-336/336B: KEY SWITCH/DISPLAY

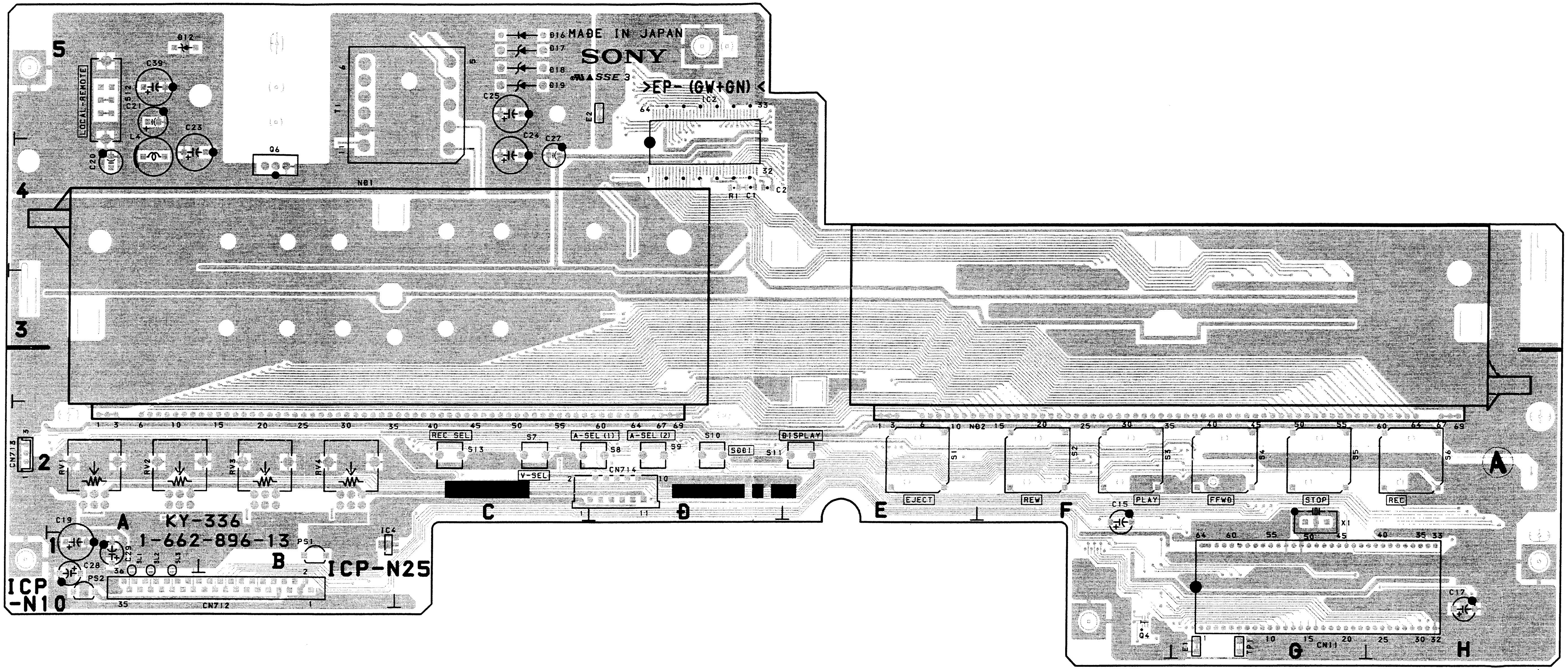

KY-336/336B -A SIDE-
SUFFIX : -13
MODEL DSR-80/80P/60/60P

KY-336/336B (1-662-896-13)

*: B SIDE

CN712	B1	D17	C5	IC3	* B1	Q5	* A5	Q24	* G3	Q43	* C3	Q62	* C3	Q81	* E3	Q100	* F3	S4	G2
CN713	A2	D18	C5	IC4	B1	Q6	B4	Q25	* G3	Q44	* C3	Q63	* B3	Q82	* E3	Q101	* F3	S5	G2
CN714	D2	D19	C5	IC5	* H1	Q7	* B3	Q26	* G3	Q45	* C3	Q64	* B3	Q83	* E3	Q102	* F3	S6	H2 (#1)
		D20	* E2			Q8	* B3	Q27	* G3	Q46	* C3	Q65	* B3	Q84	* E3	Q103	* F3	S7	C2 (#1)
D1	* F1	D21	* A2 (#1)	L1	* A1	Q9	* B3	Q28	* G3	Q47	* C3	Q66	* B3	Q85	* E3	Q104	* F3	S8	D2 (#1)
D2	* F1	D22	* A2 (#1)	L2	* F1	Q10	* B3	Q29	* G3	Q48	* C3	Q67	* B3	Q86	* E3	Q105	* F3	S9	D2 (#1)
D3	* F1	D23	* B2 (#1)	L4	A4	Q11	* B3	Q30	* G3	Q49	* C3	Q68	* B3	Q87	* E3	Q106	* F3	S10	D2 (#1)
D5	* H2	D24	* B2 (#1)	L5	* C5	Q12	* B3	Q31	* G3	Q50	* C3	Q69	* B3	Q88	* E3	Q107	* F3	S11	E2
D6	* F2	D25	* D2			Q13	* B3	Q32	* G3	Q51	* C3	Q70	* B3	Q89	* E3	Q108	* F3	S12	A5
D7	* G2	D26	* D2	ND1	A2	Q14	* B3	Q33	* G3	Q52	* C3	Q71	* B3	Q90	* E3	Q109	* H2	S13	C2 (#1)
D8	* H2	D27	* D2	ND2	E2	Q15	* A3	Q34	* G3	Q53	* C3	Q72	* B3	Q91	* F3				
D9	* C2 (#1)	D28	* C2			Q16	* A3	Q35	* G3	Q54	* C3	Q73	* D3	Q92	* F3	RV1	A2 (#1)	TP1	G1
D10	* C2 (#1)	D29	* C2	PS1	B1	Q17	* F3	Q36	* G3	Q55	* C3	Q74	* D3	Q93	* F3	RV2	A2 (#1)		
D11	* D2	D30	* C2	PS2	A1	Q18	* F3	Q37	* G3	Q56	* C3	Q75	* D3	Q94	* F3	RV3	B2 (#1)	T1	C4
D12	A5	D31	* C2			Q19	* G3	Q38	* G3	Q57	* C3	Q76	* D3	Q95	* F3	RV4	B2 (#1)		
D13	* B5			Q1	* F1	Q20	* G3	Q39	* D3	Q58	* C3	Q77	* E3	Q96	* F3			X1	G2
D14	* A5	E1	G1	Q2	* F1	Q21	* G3	Q40	* D3	Q59	* C3	Q78	* E3	Q97	* F3	S1	E2		
D15	* B5			Q3	* F1	Q22	* G3	Q41	* D3	Q60	* C3	Q79	* E3	Q98	* F3	S2	F2	#1: KY-336	
D16	C5	IC2	D4	Q4	F1	Q23	* G3	Q42	* D3	Q61	* C3	Q80	* E3	Q99	* F3	S3	F2		

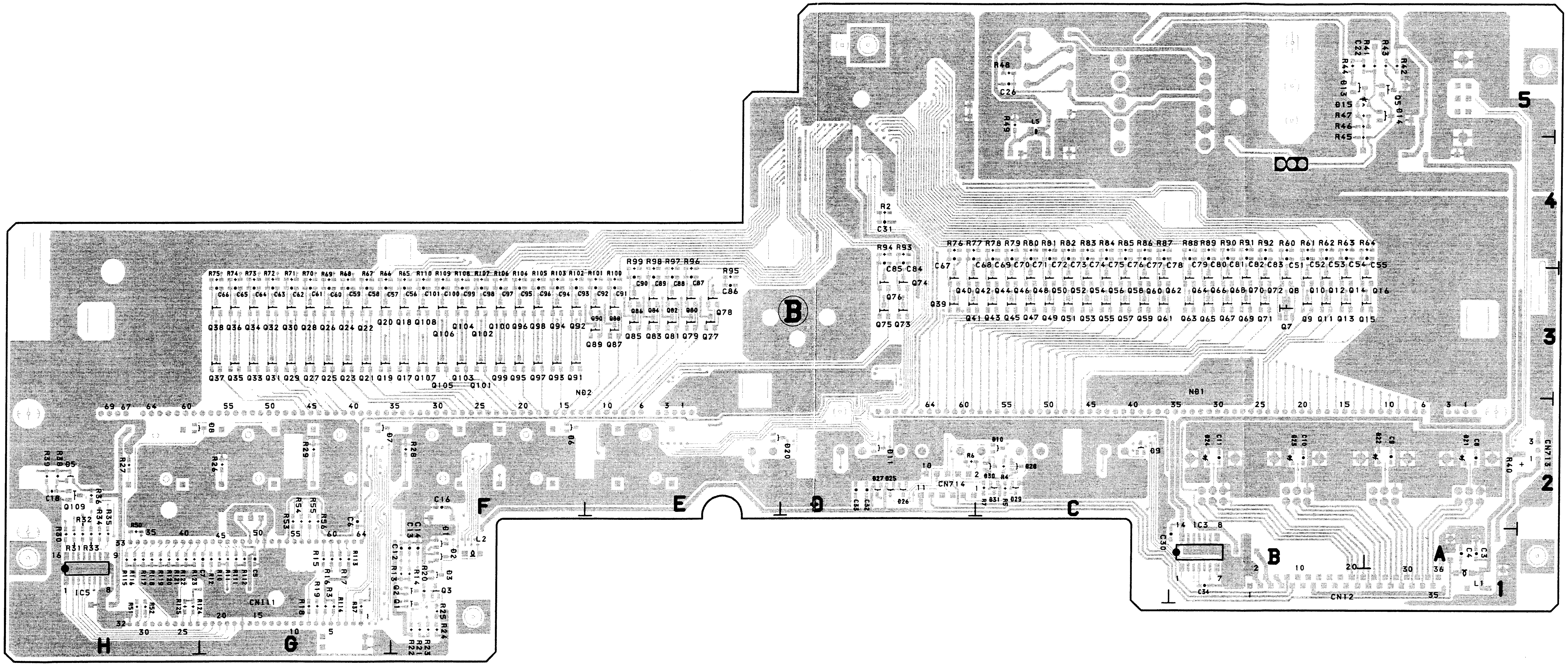

KY-336/336B -B SIDE-
SUFFIX : -13
MODEL DSR-80/80P/60/60P

NY-SP0754 / DRUCK 67

DSR-60/60P

KY-336B: KEY SWITCH/DISPLAY

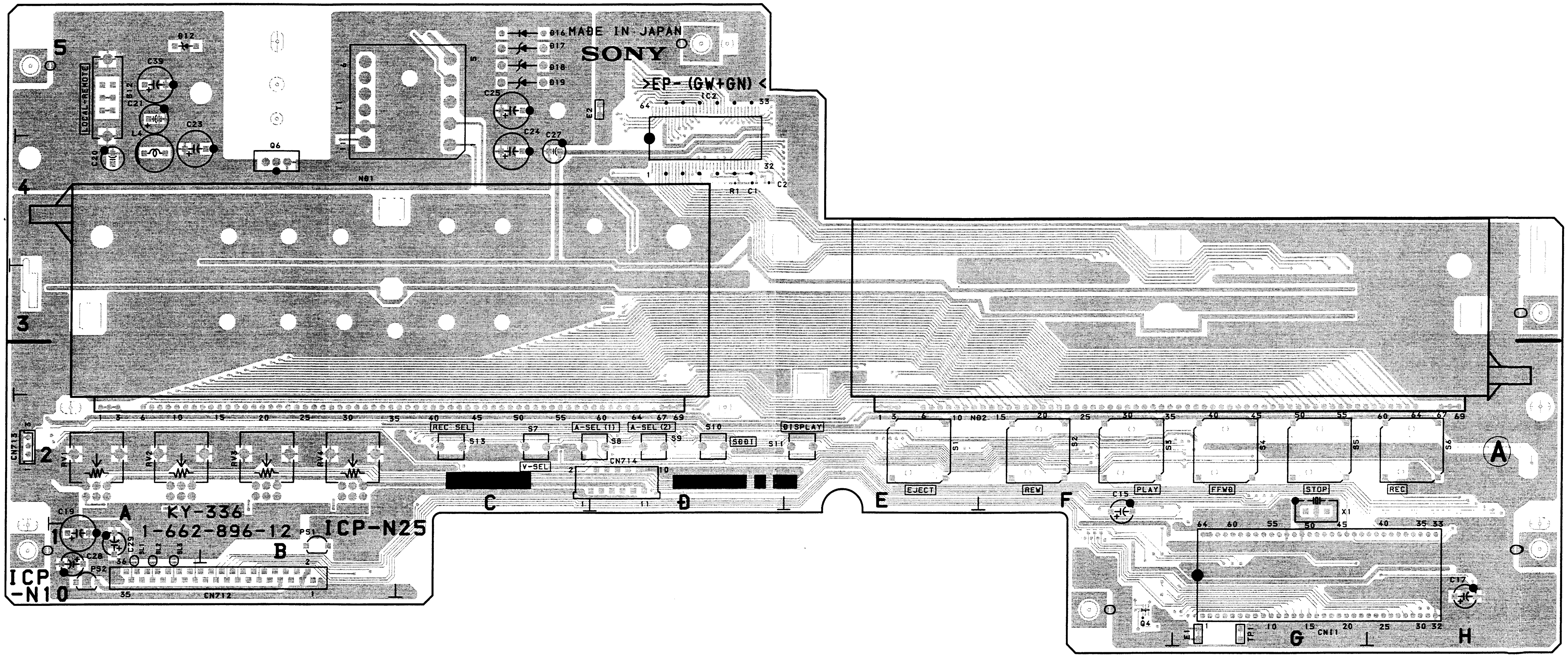

KY-336B -A SIDE-
SUFFIX : -12
MODEL DSR-60/60P

KY-336B (1-662-896-12)

*: B SIDE

Ref.	Location
CNI1	G1
CN712	B1
CN713	A2
CN714	D2
D1	* F1
D2	* F1
D3	* F1
D5	* H2
D6	* F2
D7	* G2
D8	* H2
D11	* D2
D12	A5
D13	* B5
D14	* A5
D15	* B5
D16	C5
D17	C5
D18	C5
D19	C5
D20	* E2
E1	G1
IC2	D4
IC3	* B1
IC5	* H1
L1	* A1
L2	* F1
L4	A4
L5	* C5
ND1	A2
ND2	E2
PS1	B1
PS2	A1
Q1	* F1
Q2	* F1
Q3	* F1
Q4	F1
Q5	* A5
Q6	B4
Q7	* B3
Q8	* B3
Q9	* B3
Q10	* B3
Q11	* B3
Q12	* B3
Q13	* B3
Q14	* B3
Q15	* A3
Q16	* A3
Q17	* F3
Q18	* F3
Q19	* G3
Q20	* G3
Q21	* G3
Q22	* G3
Q23	* G3
Q24	* G3
Q25	* G3
Q26	* G3
Q27	* G3
Q28	* G3
Q29	* G3
Q30	* G3
Q31	* G3
Q32	* G3
Q33	* G3
Q34	* G3
Q35	* G3
Q36	* G3
Q37	* G3
Q38	* G3
Q39	* D3
Q40	* D3
Q41	* D3
Q42	* D3
Q43	* C3
Q44	* C3
Q45	* C3
Q46	* C3
Q47	* C3
Q48	* C3
Q49	* C3
Q50	* C3
Q51	* C3
Q52	* C3
Q53	* C3
Q54	* C3
Q55	* C3
Q56	* C3
Q57	* C3
Q58	* C3
Q59	* C3
Q60	* C3
Q61	* C3
Q62	* C3
Q63	* B3
Q64	* B3
Q65	* B3
Q66	* B3
Q67	* B3
Q68	* B3
Q69	* B3
Q70	* B3
Q71	* B3
Q72	* B3
Q73	* D3
Q74	* D3
Q75	* D3
Q76	* D3
Q77	* E3
Q78	* E3
Q79	* E3
Q80	* E3
Q81	* E3
Q82	* E3
Q83	* E3
Q84	* E3
Q85	* E3
Q86	* E3
Q87	* E3
Q88	* E3
Q89	* E3
Q90	* E3
Q91	* F3
Q92	* F3
Q93	* F3
Q94	* F3
Q95	* F3
Q96	* F3
Q97	* F3
Q98	* F3
Q99	* F3
Q100	* F3
Q101	* F3
Q102	* F3
Q103	* F3
Q104	* F3
Q105	* F3
Q106	* F3
Q107	* F3
Q108	* F3
Q109	* H2
S1	E2
S2	F2
S3	F2
S4	G2
S5	G2
S11	E2
S12	A5
TP1	G1
T1	C4
X1	G2

DSR-60/60P

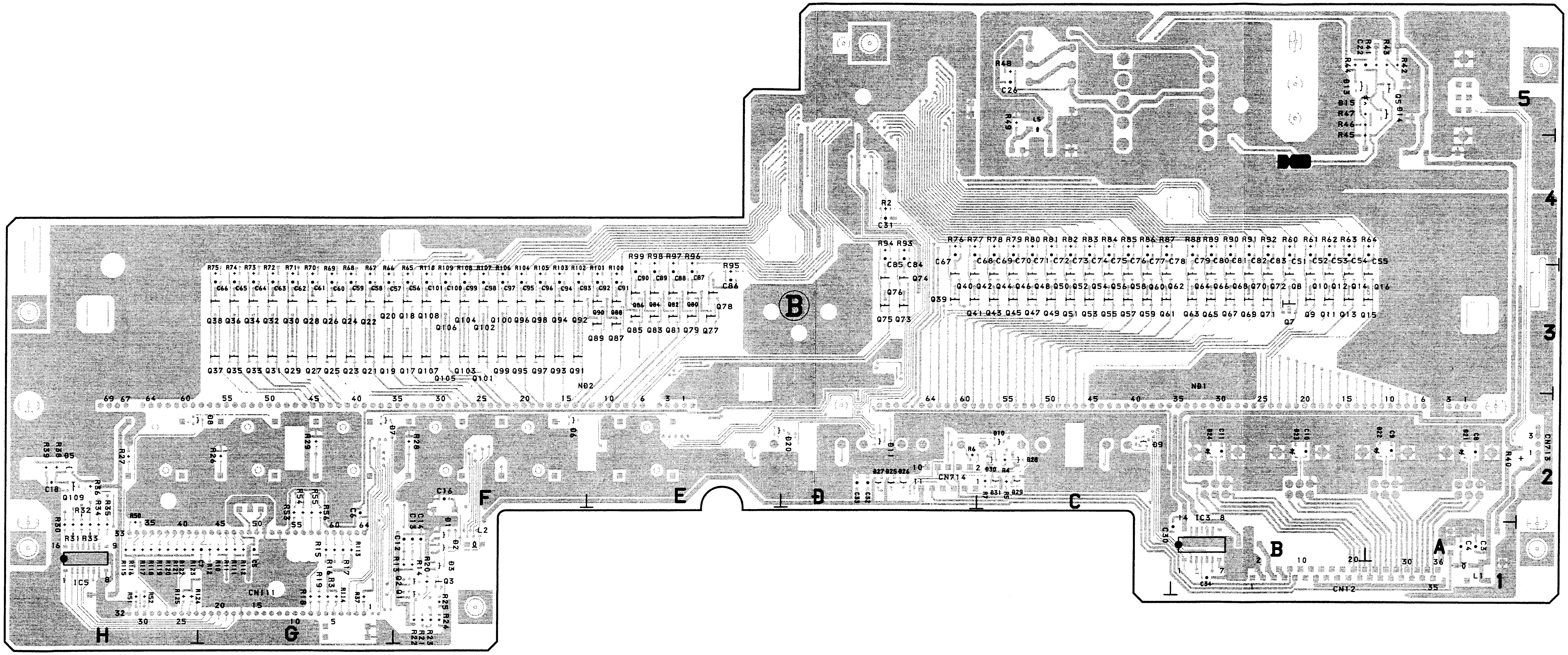

KY-336B -B SIDE-
SUFFIX : -12
MODEL DSR-60/60P

NY-SP0754 / DRUCK 69

DSR-80/80P

MB-712: MOTHER BOARD

MB-712 (1-664-950-13)

*: B SIDE

CN101	M4
CN102	M10
CN103	M14
CN104	L4
CN105	L10
CN106	L14
CN107	K4
CN108	K10
CN109	K14
CN110	J4
CN111	J14
CN112	G4
CN113	G14
CN114	F4
CN115	F14
CN116	D4
CN503	D13
CN505	D12
CN506	D16
CN601	B1
CN602	C1
CN603	D1
CN604	F1
CN605	G1
CN606	H1
CN607	K1
CN608	M1
CN609	K1
CN701	L18
CN702	L18
CN703	C6
CN801	D10
CN802	B10
CN903	A7
CN904	A8
FL1	J2
FL2	J2
FL3	J2
FL4	J2
FL5	J2
FL6	J2
FL7	K2
FL8	K2
IC1	*K2
IC2	*K2
IC3	*L17
Q1	*L17
Q2	*K17
Q3	*M17
Q4	*M17
Q5	*L16
Q6	*L17
Q7	*K17

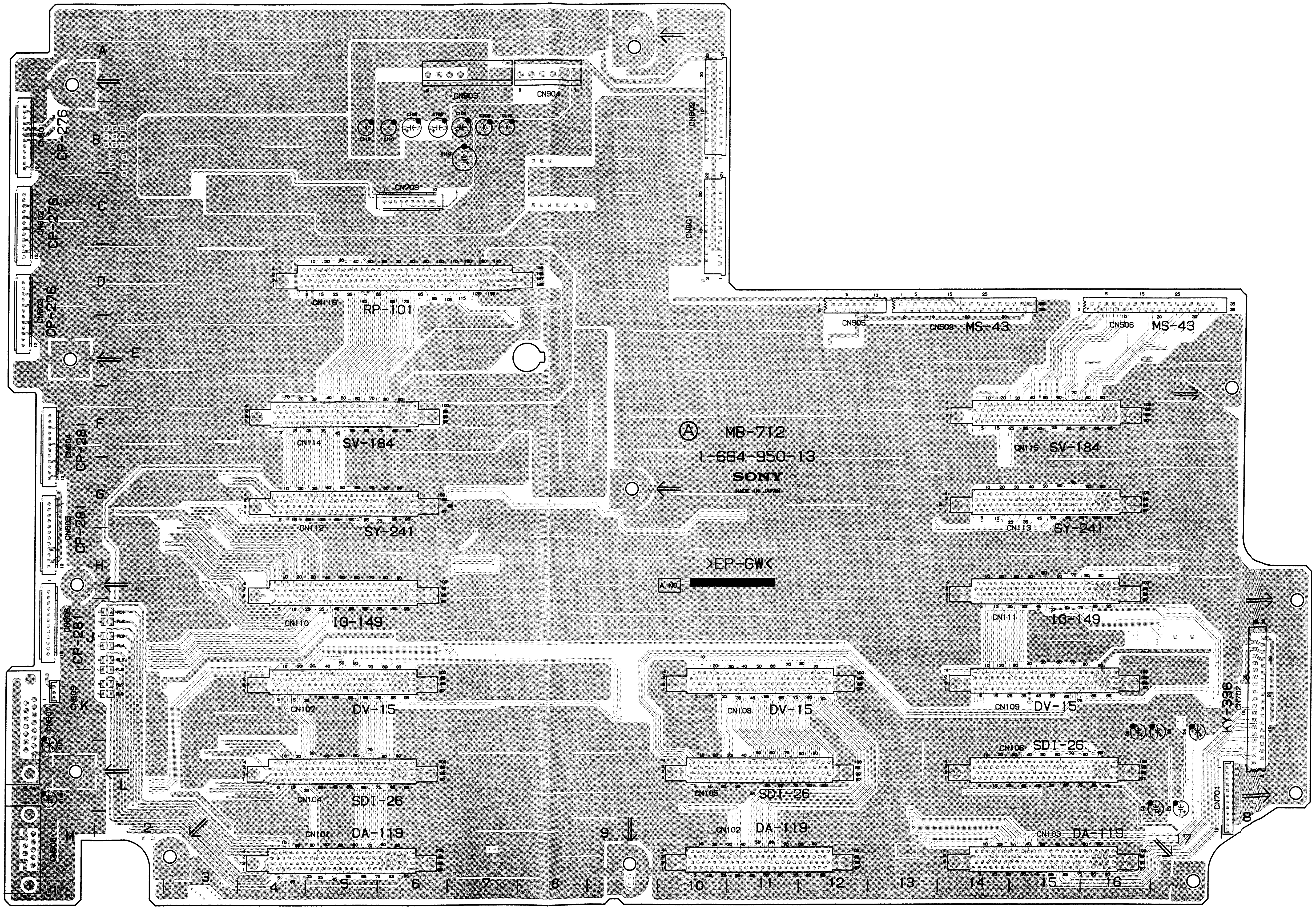

MB-712 -A SIDE-
SUFFIX : -13
MODEL DSR-80/80P

DSR-80/80P

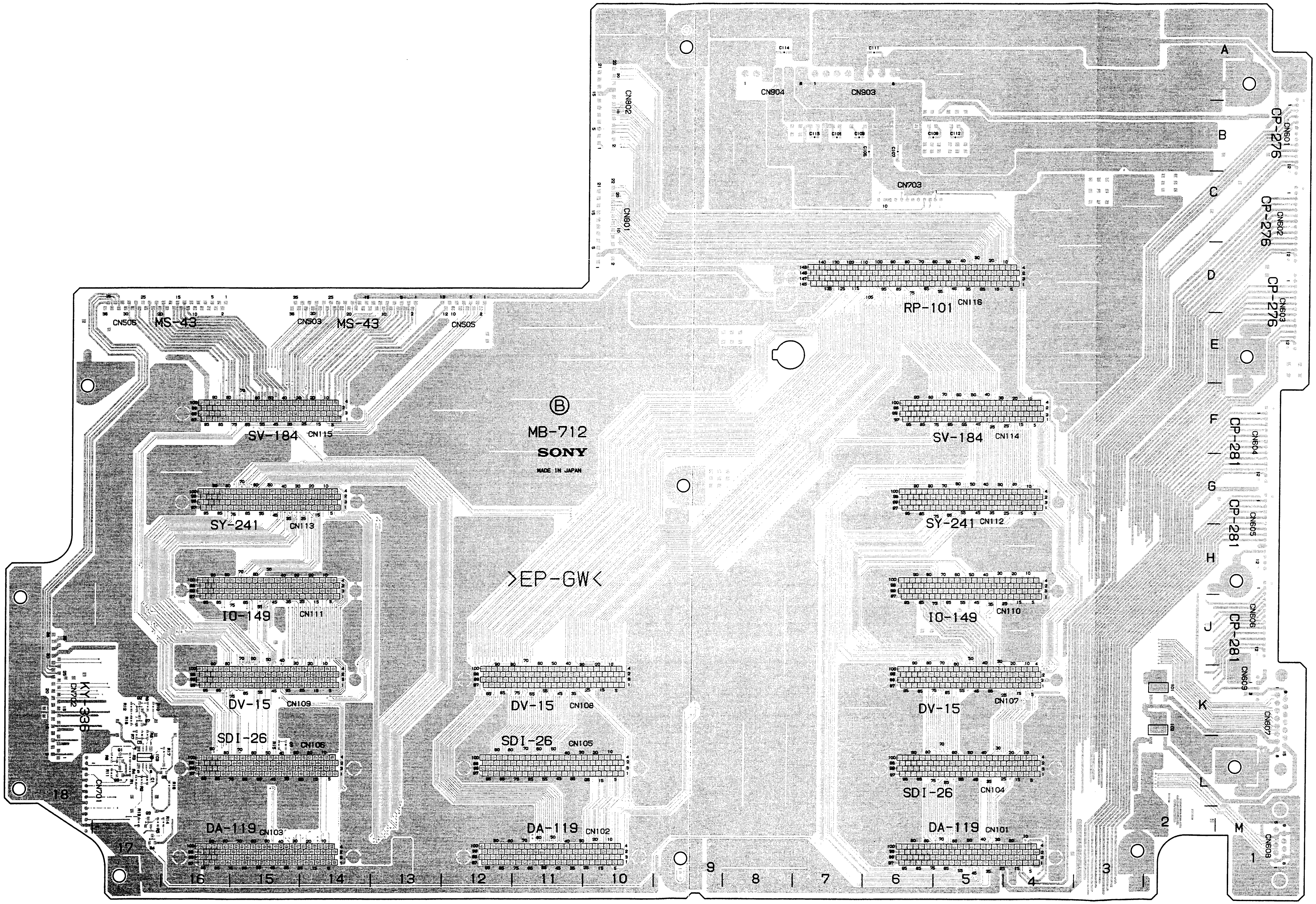

MB-712 -B SIDE-
SUFFIX : -13
MODEL DSR-80/80P

)NY-SP0754 / DRUCK 71

DSR-80/80P

MB-712: MOTHER BOARD

MB-712 (1-664-950-12)

*: B SIDE

CN101	M4
CN102	M10
CN103	M14
CN104	L4
CN105	L10
CN106	L14
CN107	K4
CN108	K10
CN109	K14
CN110	J4
CN111	J14
CN112	G4
CN113	G14
CN114	F4
CN115	F14
CN116	D4
CN503	D13
CN505	D12
CN506	D16
CN601	B1
CN602	C1
CN603	D1
CN604	F1
CN605	G1
CN606	H1
CN607	K1
CN608	M1
CN609	K1
CN701	L18
CN702	L18
CN703	C6
CN801	D10
CN802	B10
CN903	A7
CN904	A8
FL1	J2
FL2	J2
FL3	J2
FL4	J2
FL5	J2
FL6	J2
FL7	K2
FL8	K2
IC1	* K2
IC2	* K2
IC3	* L17
Q1	* L17
Q2	* K17
Q3	* M17
Q4	* M17
Q5	* L16

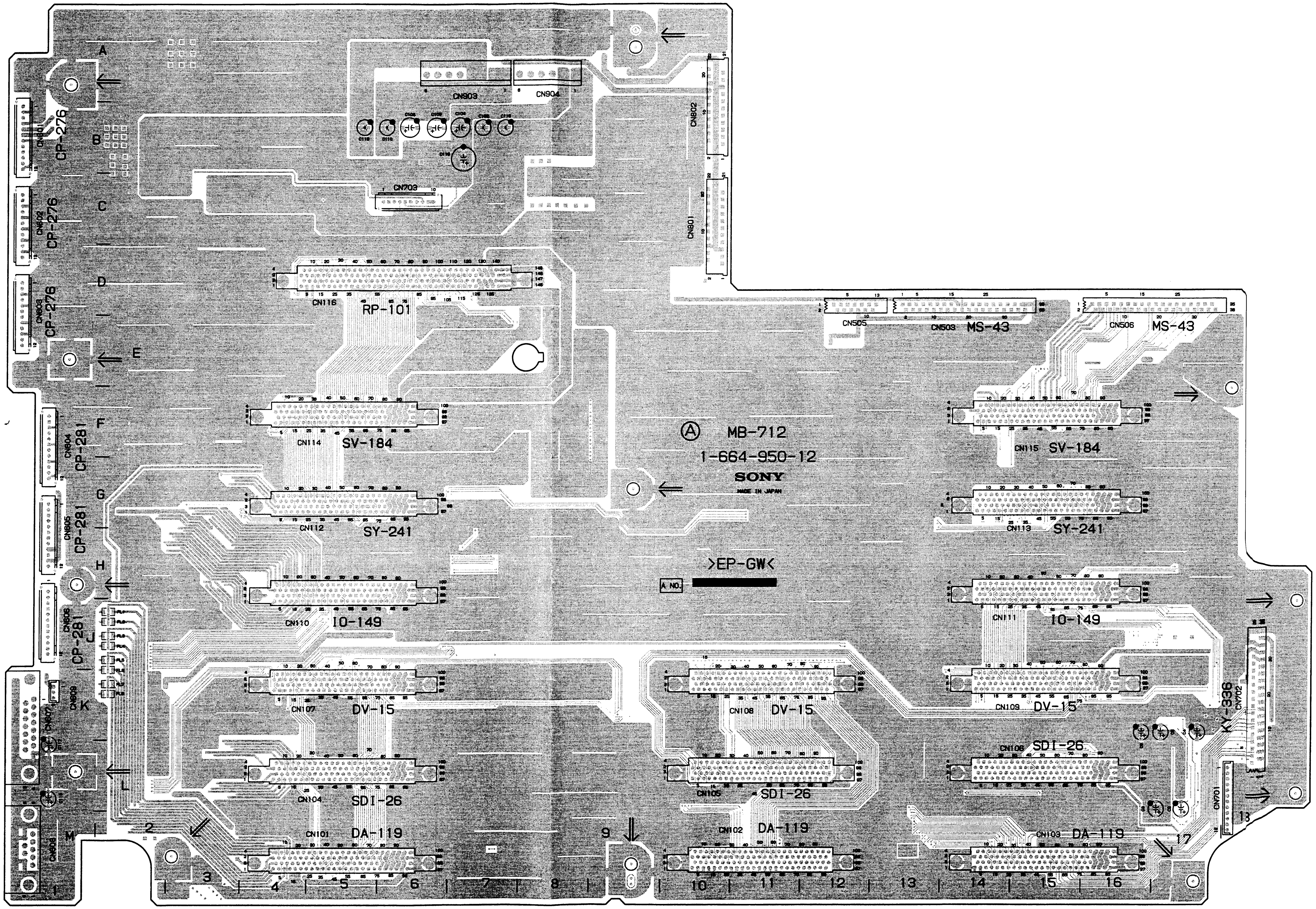

MB-712-A SIDE-
SUFFIX : -12
MODEL DSR30/80P

DSR-80/80P

12-18 (a)

SONY-SP0754 / DRUCK 72

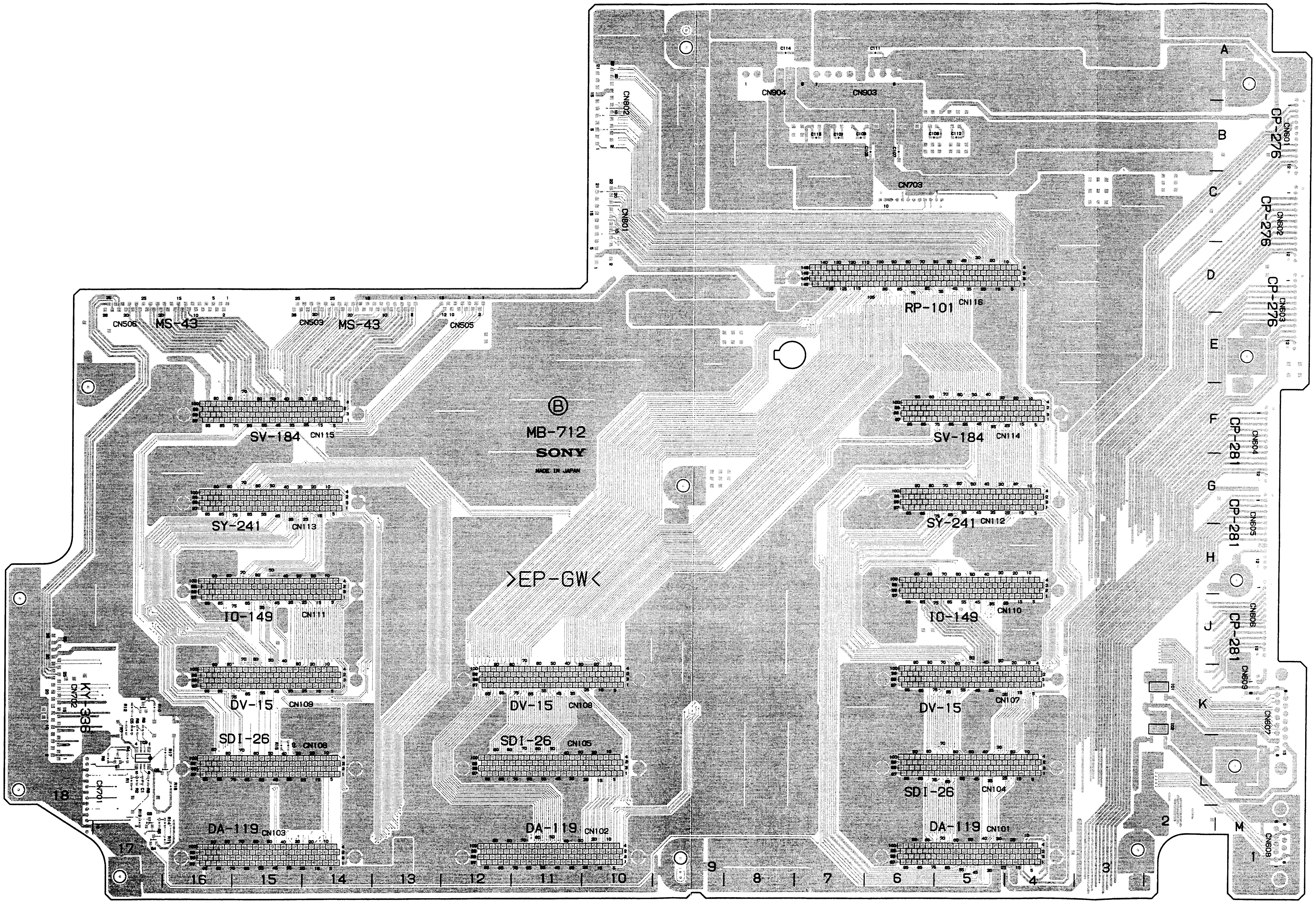

MB-712 -B SIDE-
SUFFIX : -12
MODEL DSR-80/80P

DSR-80/80P

MB-712: MOTHER BOARD

MB-712 (1-664-950-11)

*: B SIDE

CN101	M4
CN102	M10
CN103	M14
CN104	L4
CN105	L10
CN106	L14
CN107	K4
CN108	K10
CN109	K14
CN110	J4
CN111	J14
CN112	G4
CN113	G14
CN114	F4
CN115	F14
CN116	D4
CN503	D13
CN505	D12
CN506	D16
CN601	B1
CN602	C1
CN603	D1
CN604	F1
CN605	G1
CN606	H1
CN607	K1
CN608	M1
CN609	K1
CN701	L18
CN702	L18
CN703	C6
CN801	D10
CN802	B10
CN903	A7
CN904	A8
FL1	J2
FL2	J2
FL3	J2
FL4	J2
FL5	J2
FL6	J2
FL7	K2
FL8	K2
IC1	* K2
IC2	* K2
IC3	* L17
Q1	* L17
Q2	* K17
Q3	* M17
Q4	* M17
Q5	* L16

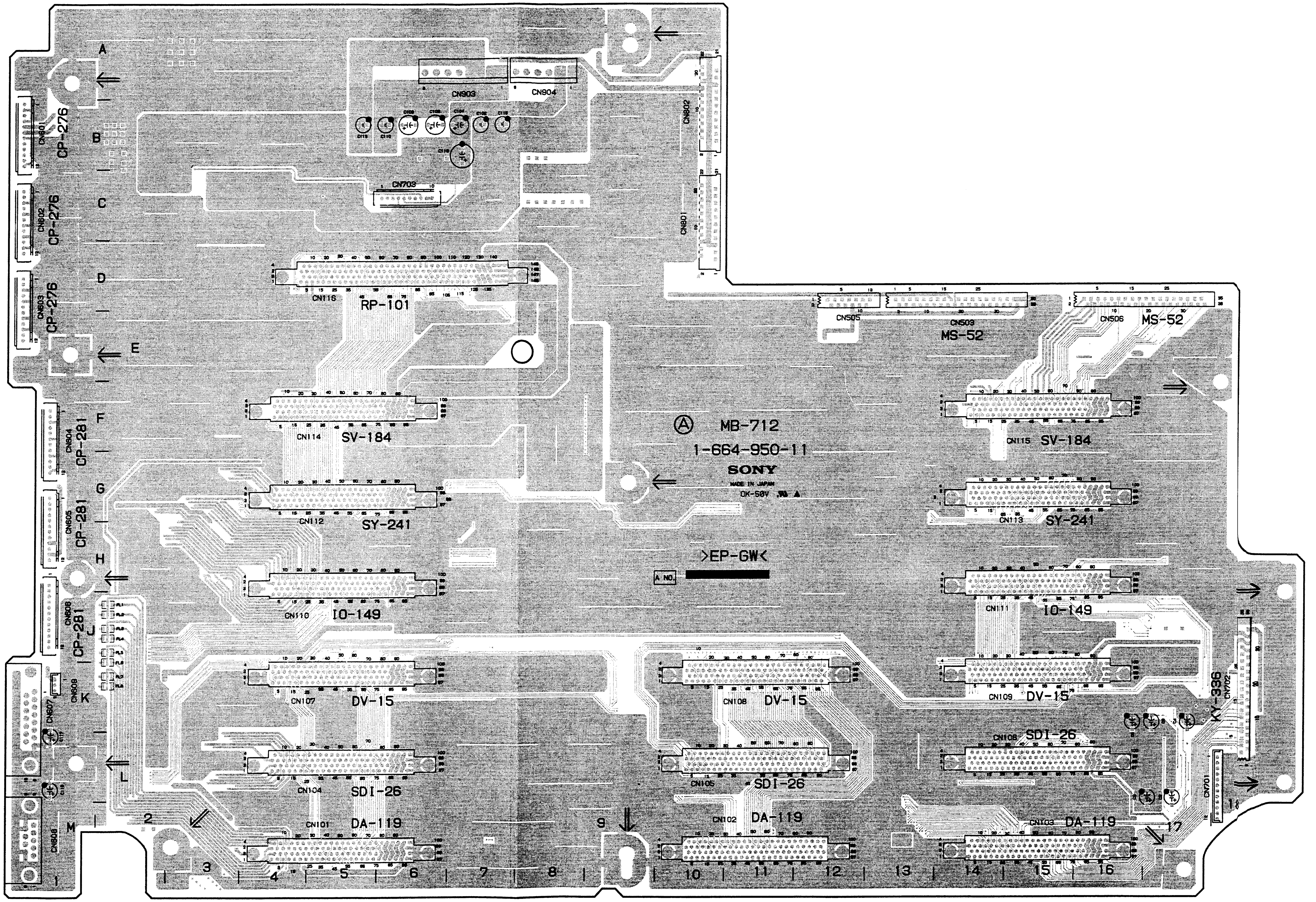

MB-712-A SIDE-

SUFFIX : -11

MODEL DSR-80/80P

DSR-80/80P

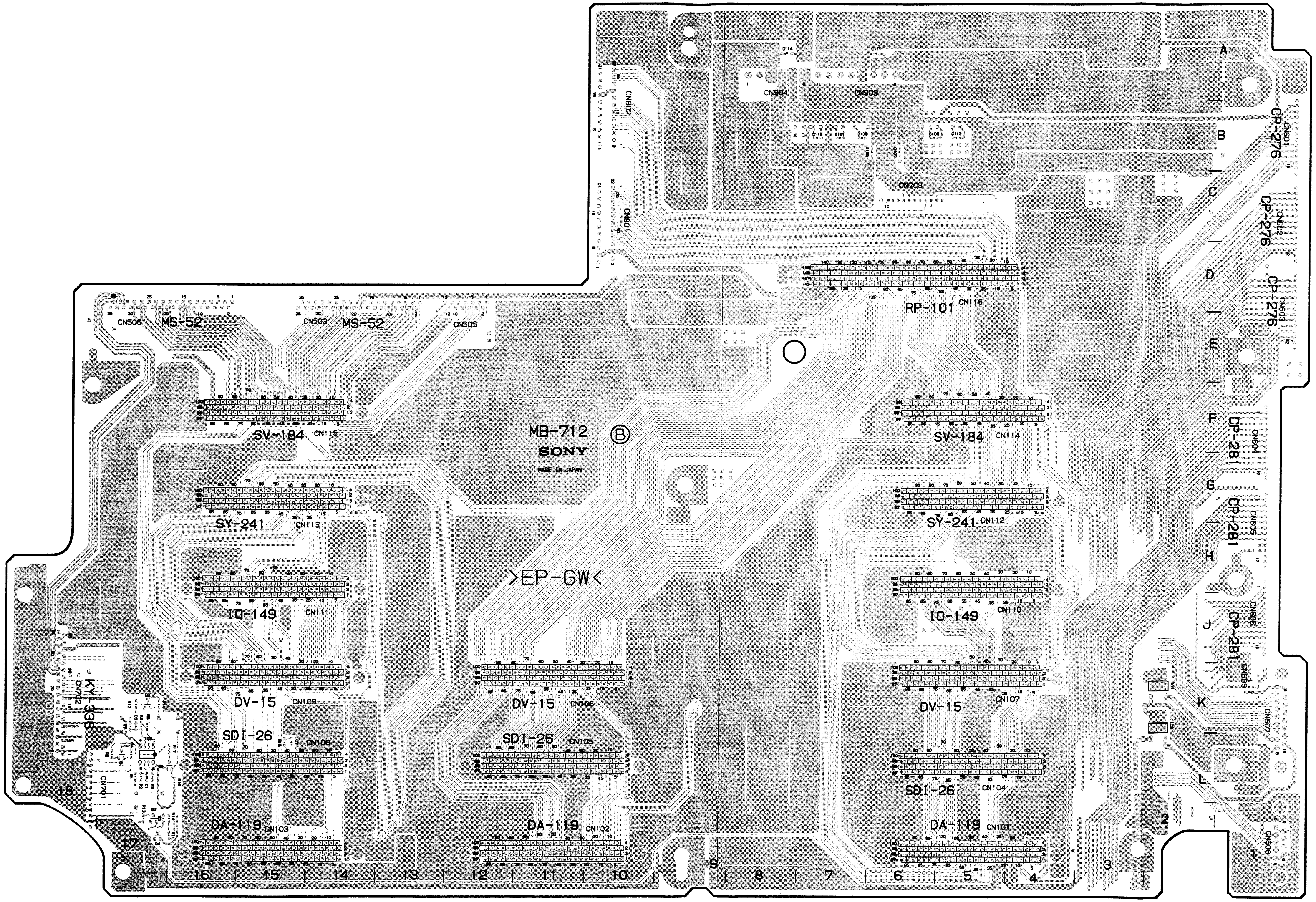

MB-712 -B SIDE-

SUFFIX : -11
MODEL DSR-80/80P

MB-713: MOTHER BOARD

DSR-60/60P

MB-713 (1-664-951-11)

*: B SIDE

CN104	K4
CN105	K10
CN106	K14
CN107	J4
CN108	J10
CN109	J14
CN110	I4
CN111	I14
CN112	G4
CN113	G14
CN114	F4
CN115	F14
CN116	B9
CN503	D13
CN505	D12
CN506	D16
CN601	B1
CN602	C1
CN603	D1
CN604	F1
CN605	G1
CN606	H1
CN607	J1
CN608	L1
CN609	J1
CN701	K18
CN702	K18
CN703	C6
CN801	B10
CN903	A7
CN904	A8
IC1	* K3
IC2	* K3
IC3	* L16
Q1	* L16
Q2	* L16
Q3	* L17
Q4	* L17

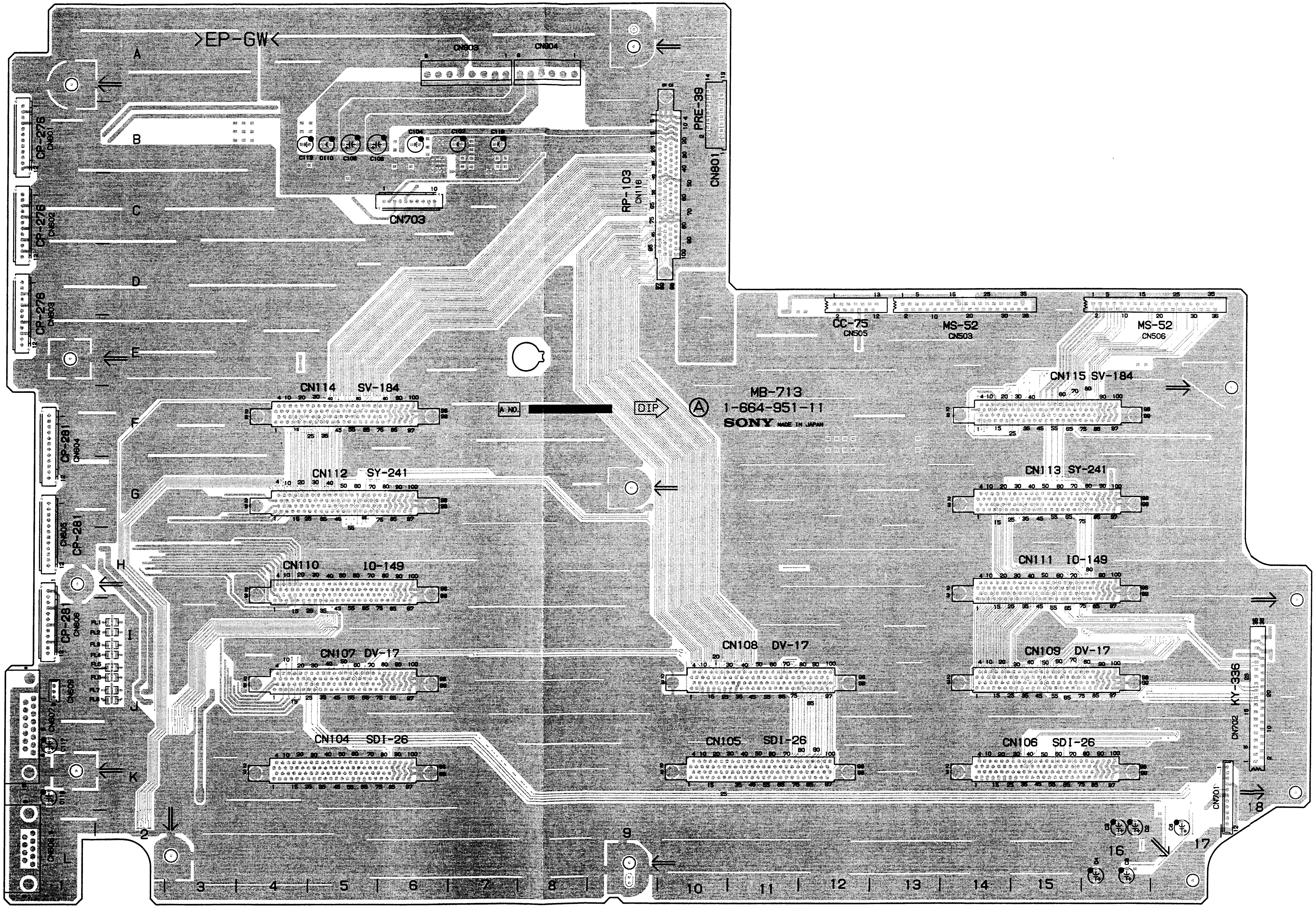

MB-713 -A SIDE-
SUFFIX : -11
MODEL DSR-60/60P

DSR-60/60P

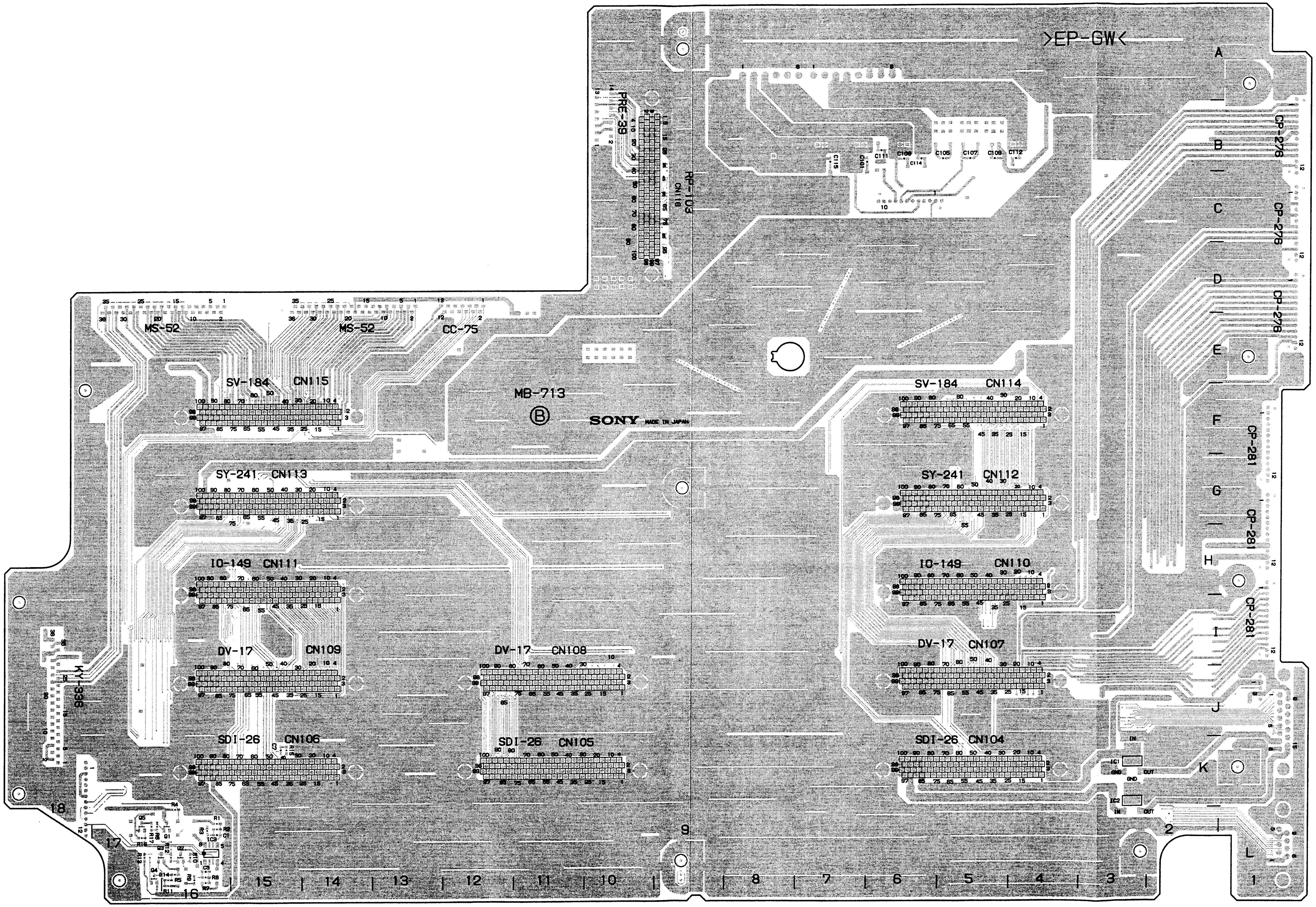

MB-713 -B SIDE-
SUFFIX : -11
MODEL DSR-60/60P

MS-43: DRUM/CAPSTAN DRIVE MECHA SENSOR

MS-43 (1-662-898-12,13,14)

*: B SIDE

CN201	F1
CN202	B2
CN203	F3
CN204	D4
CN205	F4
CN206	F6
CN207	C3
CN208	C6
CN209	B3
CN210	C4
CN211	A1
CN212	A3
CN221	F1
D1	D6
D2	E6
D101	B3
IC1	F4
IC2	F3
IC101	A2
IC102	A3
IC103	B2
IC104	B3
IC201	F1
IC202	F2
Q1	D6
Q2	E6
TH1	F4

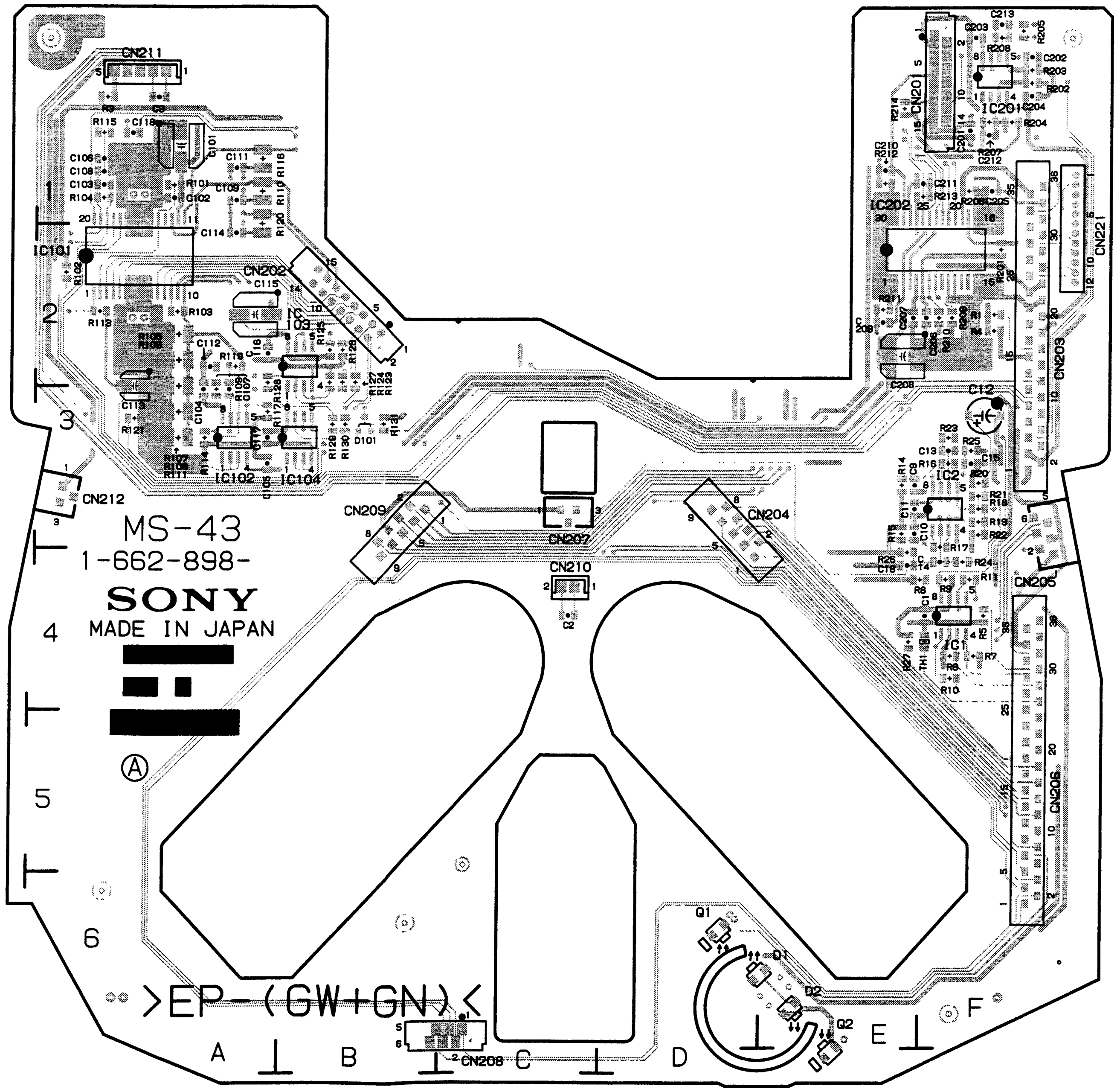

MS-43 -A SIDE-
SUFFIX : -12, 13, 14
MODEL DSR-80/80P/60/60P

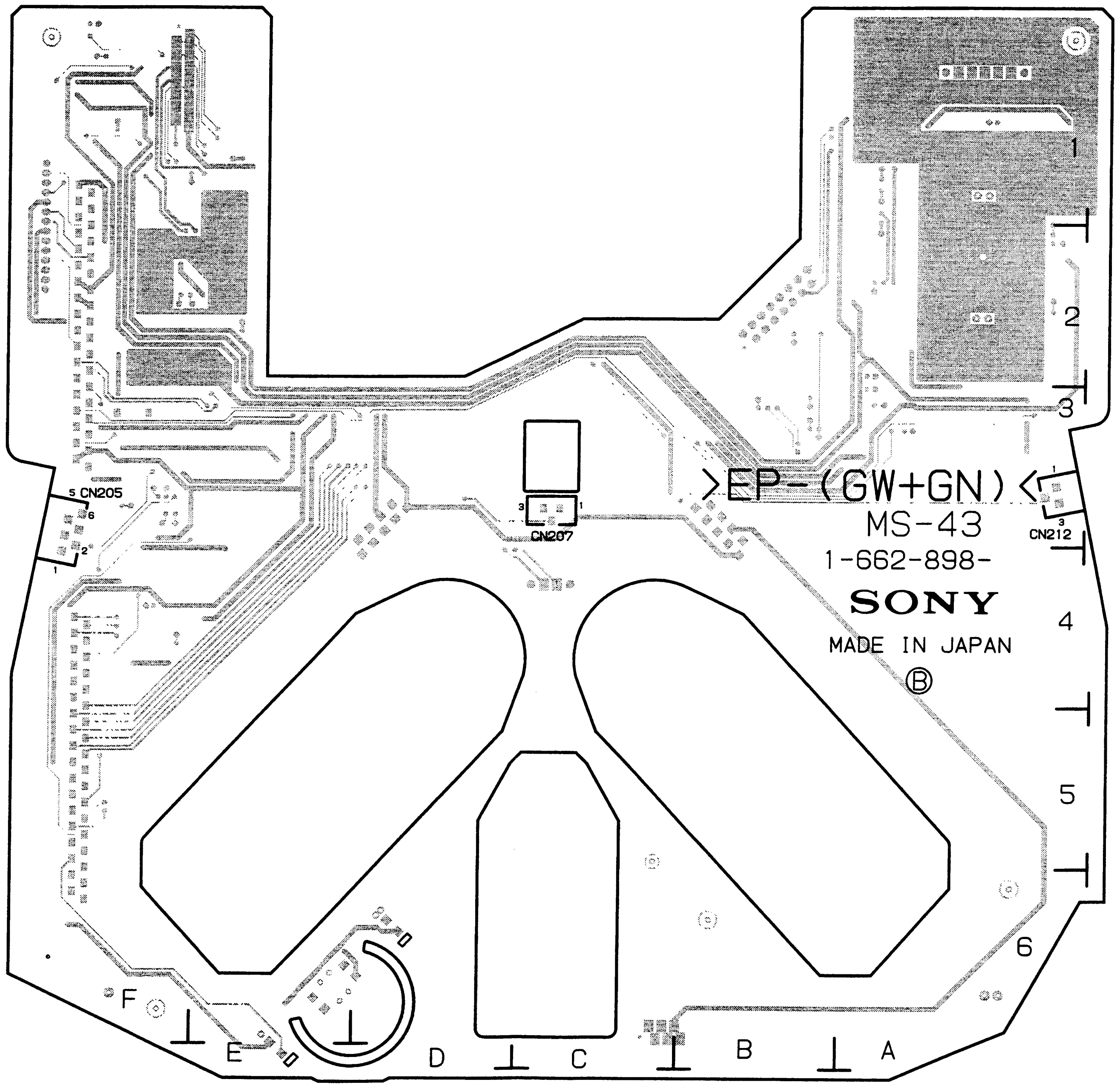

MS-43 -B SIDE-

SUFFIX : -12, 13, 14

MODEL DSR-80/80P/60/60P

PRE-34: REC/PB DIGITAL PROCESS

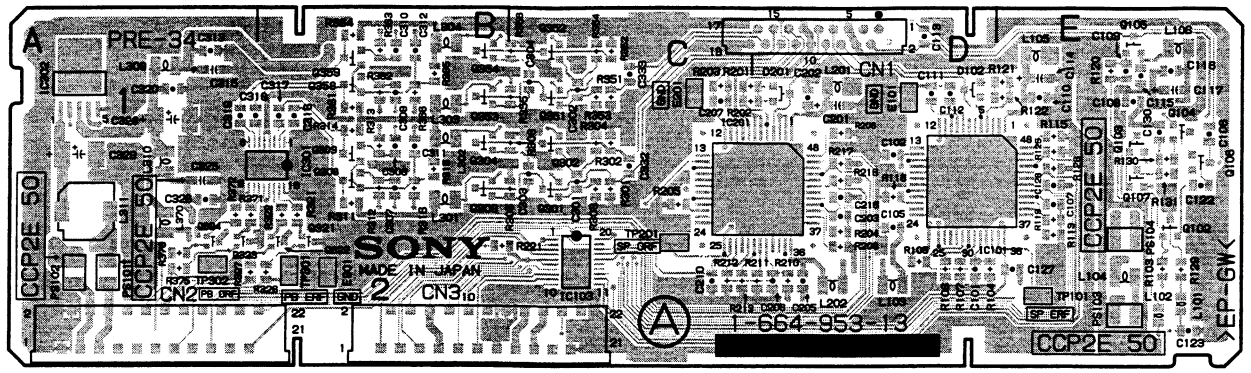

PRE-34 -A SIDE-
SUFFIX : -13
MODEL DSR-80/80P

DSR-80/80P

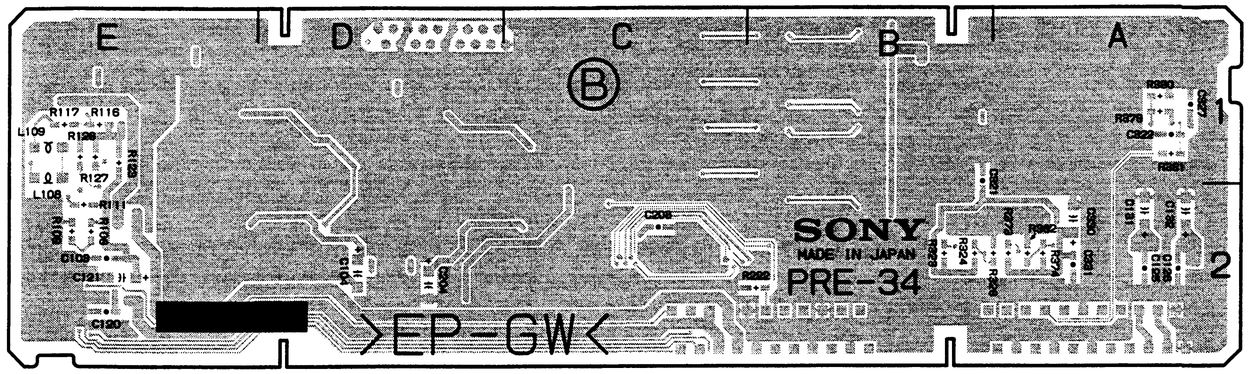

PRE-34 -B SIDE-
SUFFIX : -13
MODEL DSR-80/80P

· PRE-34 (1-664-953-13)

* : B SIDE

CN1	D1	IC302	A1	L304	B1	Q106	E1	Q354	B1
CN2	A2			L309	A1	Q107	E1	Q358	B1
CN3	B2	L101	E2	L310	A1	Q301	C2	Q359	B1
		L102	E2	L311	A2	Q302	C1		
D102	D1	L103	D2	L370	A2	Q303	B2	TP101	E2
D201	D1	L104	E2			Q304	B1	TP201	C2
		L105	E1	PS101	A2	Q308	B1	TP301	B2
E101	D1	L106	E1	PS102	A2	Q309	B1	TP302	A2
E201	C1	L108	* E1	PS103	E2	Q321	B2		
E301	B2	L109	* E1	PS104	E2	Q322	B2		
		L201	D1			Q323	A2		
IC101	D1	L202	D2	Q102	E2	Q324	A2		
IC103	C2	L301	B2	Q103	E1	Q351	C1		
IC201	D2	L302	B1	Q104	E1	Q352	C1		
IC301	B1	L303	B1	Q105	E1	Q353	B1		

PRE-34: REC/PB DIGITAL PROCESS

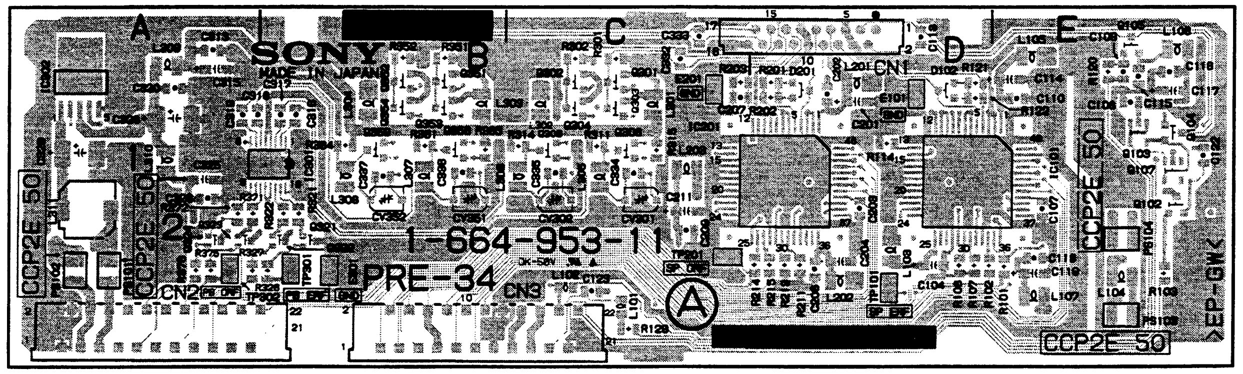

PRE-34 -A SIDE-
SUFFIX : -11
MODEL DSR-80/80P

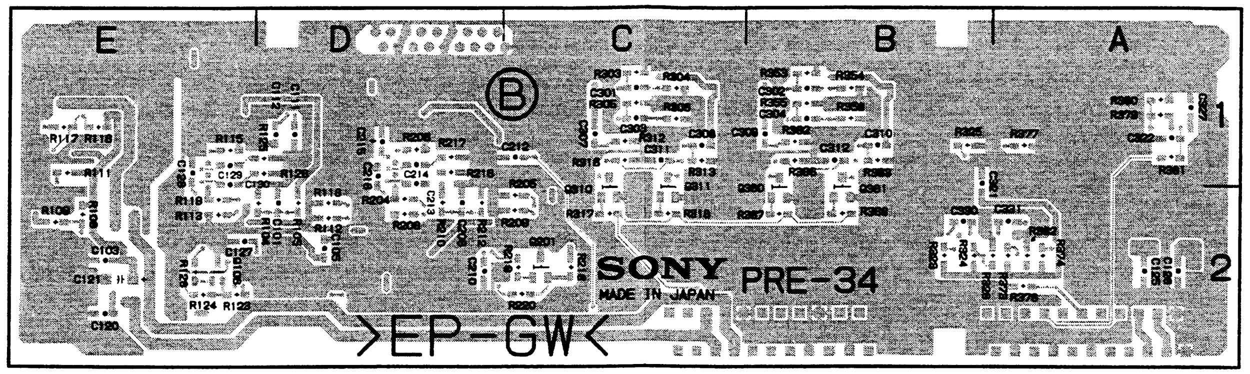

PRE-34 -B SIDE-
SUFFIX : -11
MODEL DSR-80/80P

PRE-34 (1-664-953-11)

*: B SIDE

CN1	D1	IC101	D1	L303	B1	Q102	E2	Q323	A2
CN2	A2	IC201	D1	L304	B1	Q103	E1	Q324	A2
CN3	B2	IC301	B1	L305	C1	Q104	E1	Q351	B1
		IC302	A1	L306	C1	Q105	E1	Q352	B1
CV301	C2			L307	B1	Q107	E1	Q353	B1
CV302	C2	L101	C2	L308	B1	Q301	C1	Q354	B1
CV351	B2	L102	C2	L309	A1	Q302	C1	Q358	B1
CV352	B2	L103	D2	L310	A1	Q303	C1	Q359	B1
		L104	E2	L311	A2	Q304	C1	Q360	* B2
D102	D1	L105	E1			Q308	C1	Q361	* B2
D201	D1	L106	E1	PS101	A2	Q309	C1		
		L201	D1	PS102	A2	Q310	* C2	TP101	D2
E101	D1	L202	D2	PS103	E2	Q311	* C2	TP201	C2
E201	C1	L301	C1	PS104	E2	Q321	B2	TP301	B2
E301	B2	L302	C1			Q322	B2	TP302	A2

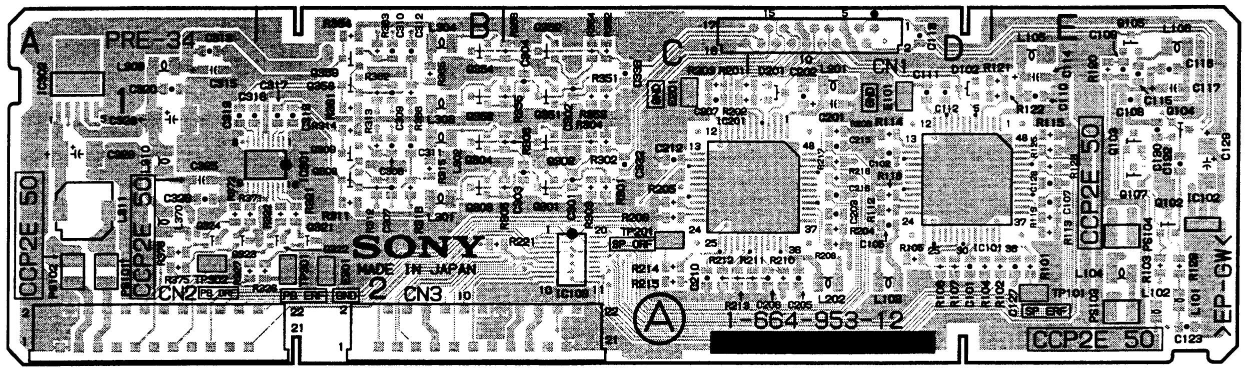

PRE-34 -A SIDE-
SUFFIX : -12
MODEL DSR-80/80P

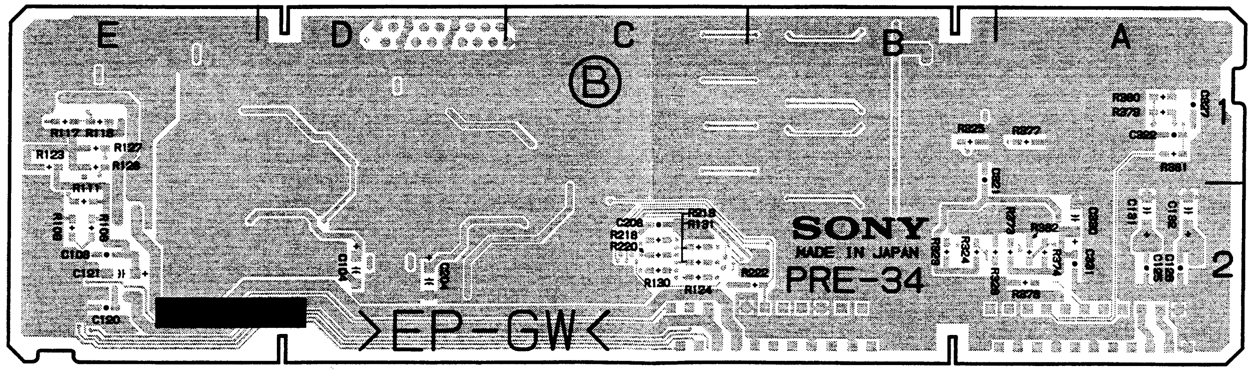

PRE-34 -B SIDE-
SUFFIX : -12
MODEL DSR-80/80P

PRE-34 (1-664-953-12)

*: B SIDE

CN1	D1	IC302	A1	L310	A1	Q302	C1	TP101	E2
CN2	A2			L311	A2	Q303	B2	TP201	C2
CN3	B2	L101	E2	L370	A2	Q304	B1	TP301	B2
		L102	E2			Q308	B1	TP302	A2
D102	D1	L103	D2	PS101	A2	Q309	B1		
D201	D1	L104	E2	PS102	A2	Q321	B2		
		L105	E1	PS103	E2	Q322	B2		
E101	D1	L106	E1	PS104	E2	Q323	A2		
E201	C1	L201	D1			Q324	A2		
E301	B2	L202	D2	Q102	E2	Q351	C1		
		L301	B2	Q103	E1	Q352	C1		
IC101	D1	L302	B1	Q104	E1	Q353	B1		
IC103	C2	L303	B1	Q105	E1	Q354	B1		
IC201	D2	L304	B1	Q107	E1	Q358	B1		
IC301	B1	L309	A1	Q301	C2	Q359	B1		

DSR-80/80P

RP-101: REC/PB HEAD AMP, RF A/D

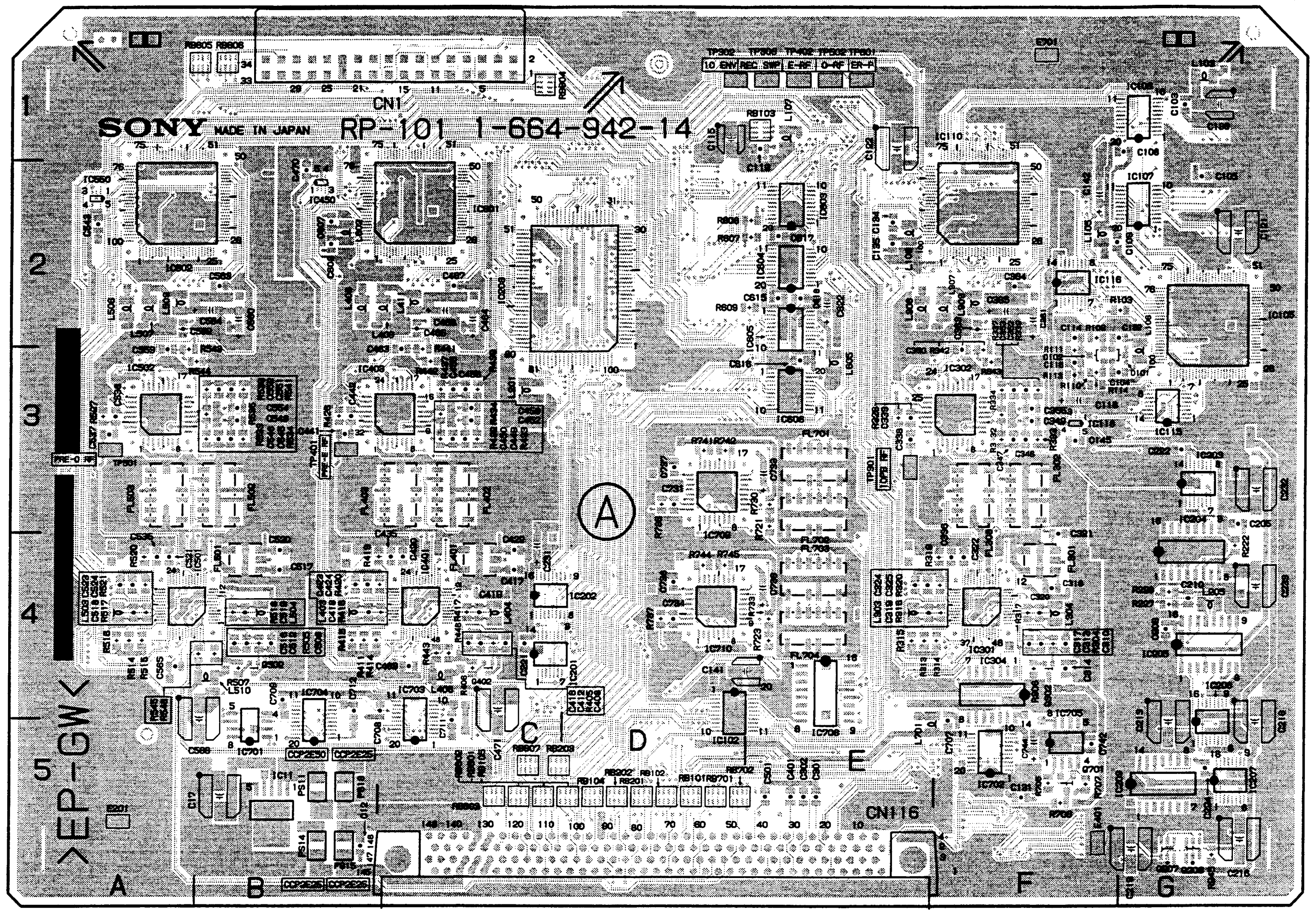

RP-101 -A SIDE-

SUFFIX : -14
MODEL DSR-80/80P

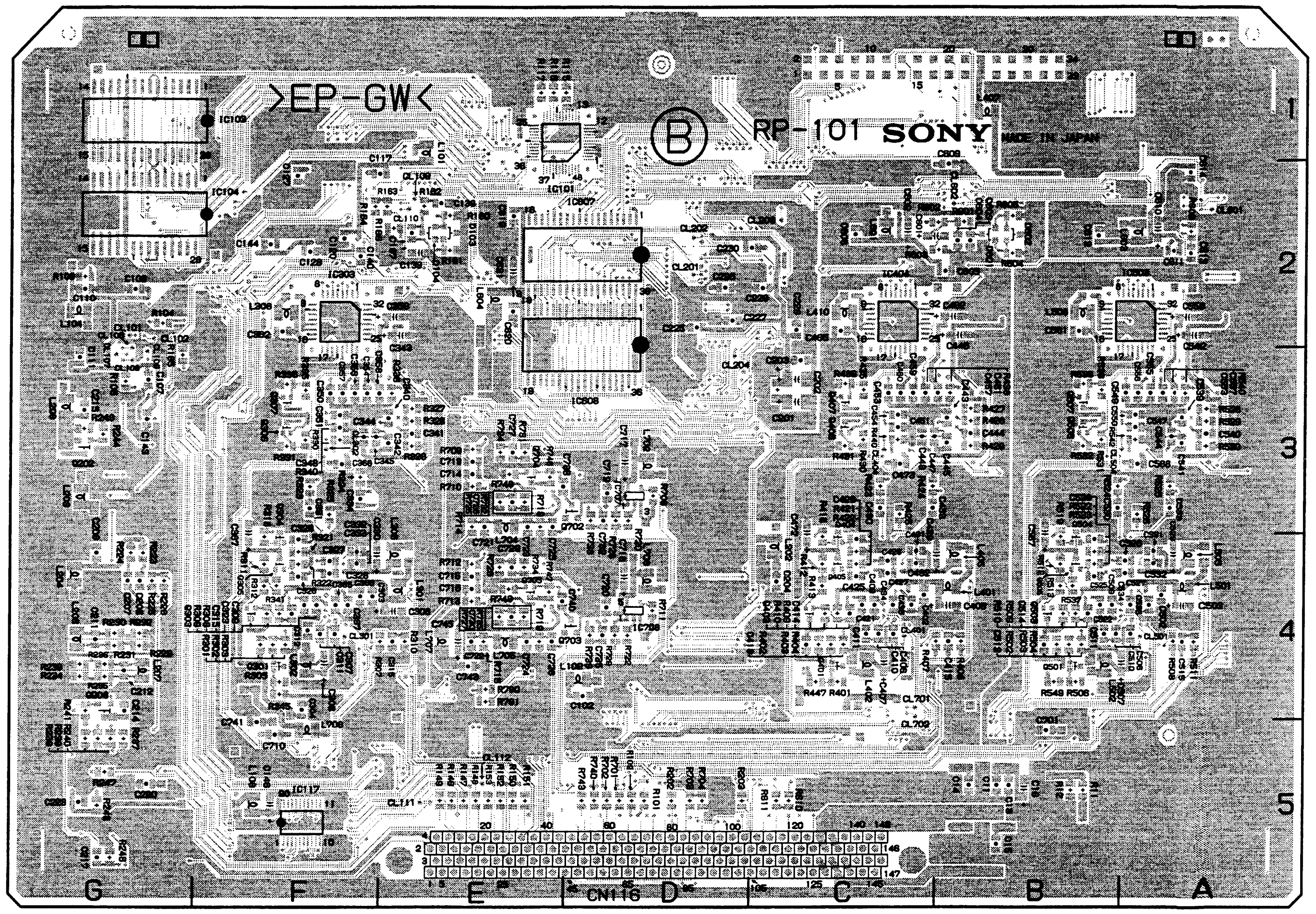

RP-101 -B SIDE-

SUFFIX : -14
MODEL DSR-80/80P

RP-101 (1-664-942-14)

*: B SIDE

CN1	C1
CN116	E5
D101	F3
D102	F3
D103	* E2
D104	* E2
D601	* B2
D602	* B2
E201	A5
E401	F5
E701	F1
FL301	F4
FL302	F3
FL303	F3
FL401	C4
FL402	C3
FL403	C3
FL501	B4
FL502	B3
FL503	A3
FL701	E3
FL702	E3
IC11	B5
IC101	* E1
IC102	D4
IC103	* G1
IC104	* G2
IC105	G2
IC106	G1
IC107	G2
IC110	F2
IC115	G3
IC116	F2
IC117	* F5
IC118	F3
IC201	C4
IC202	C4
IC203	G3
IC204	G4
IC205	G4
IC206	G5
IC207	G5
IC208	D2
IC209	G5
IC301	F4
IC302	F3
IC303	* F2
IC304	F4
IC401	C4
IC403	C3
IC404	* C2
IC450	B2
IC501	A4
IC502	A3
IC503	* A2
IC550	A2
IC601	C2
IC602	A2
IC603	E2
IC604	E2
IC605	E2
IC606	E3
IC607	* D2
IC608	* D2
IC701	B5
IC702	F5
IC703	C5
IC704	B5
IC705	F5
IC706	E4
IC707	* D3
IC709	D3
L101	* E1
L102	* D4
L103	G1
L104	* G2
L105	F2
L106	G3
L107	E1
L108	* F5
L109	E2
L201	C3
L202	* C4
L203	* G3
L204	* G4
L205	G4
L206	* G4
L207	* G4
L208	* G3
L301	* E4
L302	* F4
L303	E4
L305	* E4
L306	E2
L307	F2
L308	* F2
L309	F2
L401	* B4
L402	* C4
L403	B4
L405	* B4
L406	C4
L407	* B1
L408	B2
L409	C2
L410	* C2
L411	C2
L501	* A4
L502	* B4
L503	A4
L505	* A4
L506	A2
L507	A2
L508	* B2
L509	A2
L510	B4
L601	* C2
L602	B2
L603	* A2
L604	* E2
L605	E3
L701	E5
L702	* D3
L704	* E3
L706	* F5
L707	* E4
PS11	B5
PS13	B5
PS14	B5
PS15	B5
Q202	* G3
Q206	G5
Q207	G5
Q208	* G4
Q301	* F4
Q302	F4
Q303	* F4
Q304	* F4
Q305	* F4
Q306	* F3
Q307	* F3
Q401	* C4
Q402	C4
Q403	* C4
Q404	* C4
Q405	* C4
Q406	* C3
Q407	* C3
Q501	* B4
Q502	B4
Q503	* B4
Q504	* B4
Q505	* B4
Q506	* B3
Q507	* B3
Q701	F5
Q702	* D3
Q703	* D4
Q704	* E3
RB101	D5
RB102	D5
RB103	E1
RB104	D5
RB105	D5
RB201	D5
RB202	D5
RB203	C5
RB601	C5
RB602	C5
RB603	C5
RB604	C1
RB605	A1
RB606	B1
RB607	C5
RB701	D5
RB702	D5
TP301	E3
TP302	D1
TP303	E1
TP401	B3
TP402	E1
TP501	A3
TP502	E1
TP601	E1

RP-101: REC/PB HEAD AMP, RF A/D

DSR-80/80P

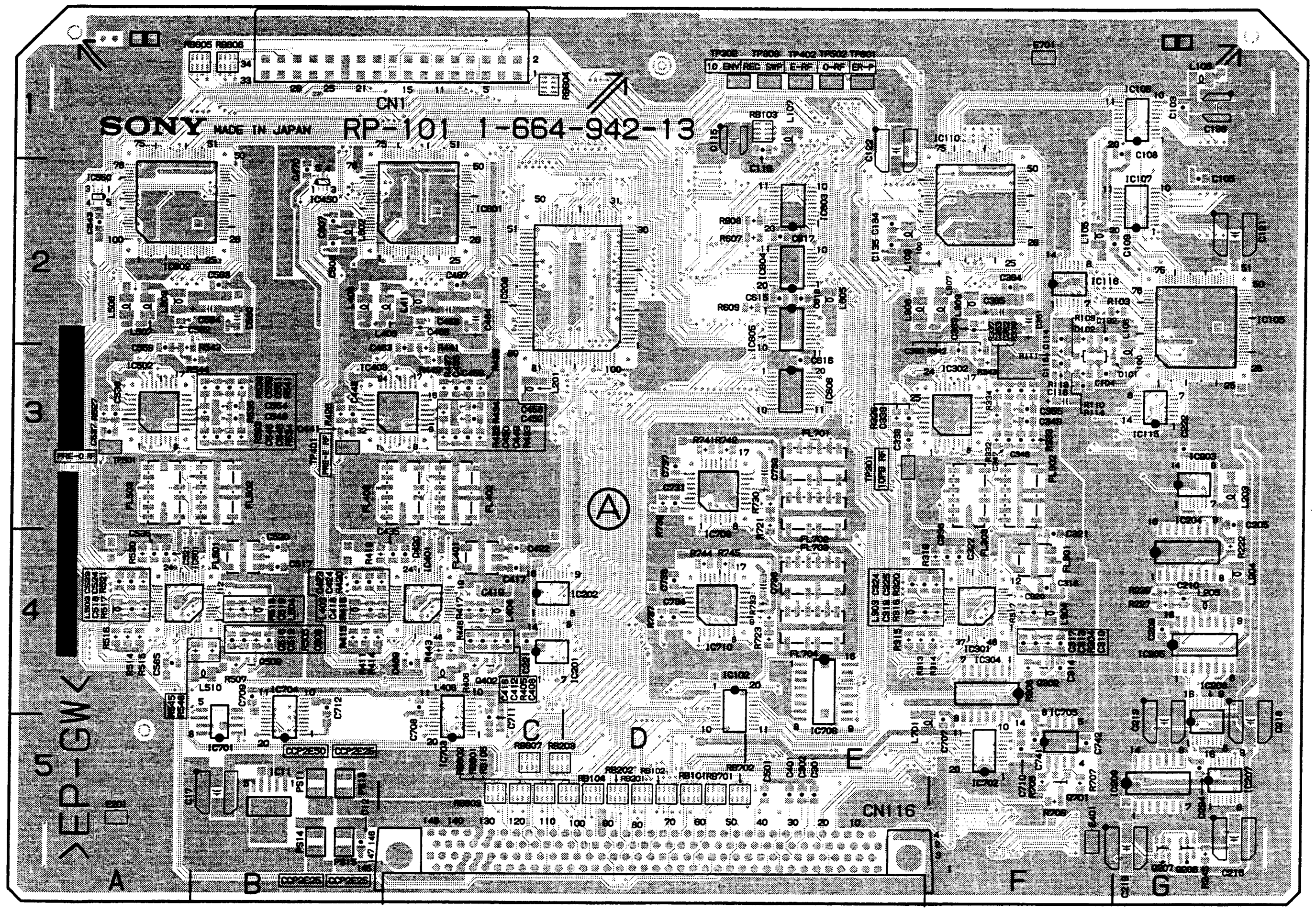

RP-101 -A SIDE-
SUFFIX : -13
MODEL DSR-80/80P

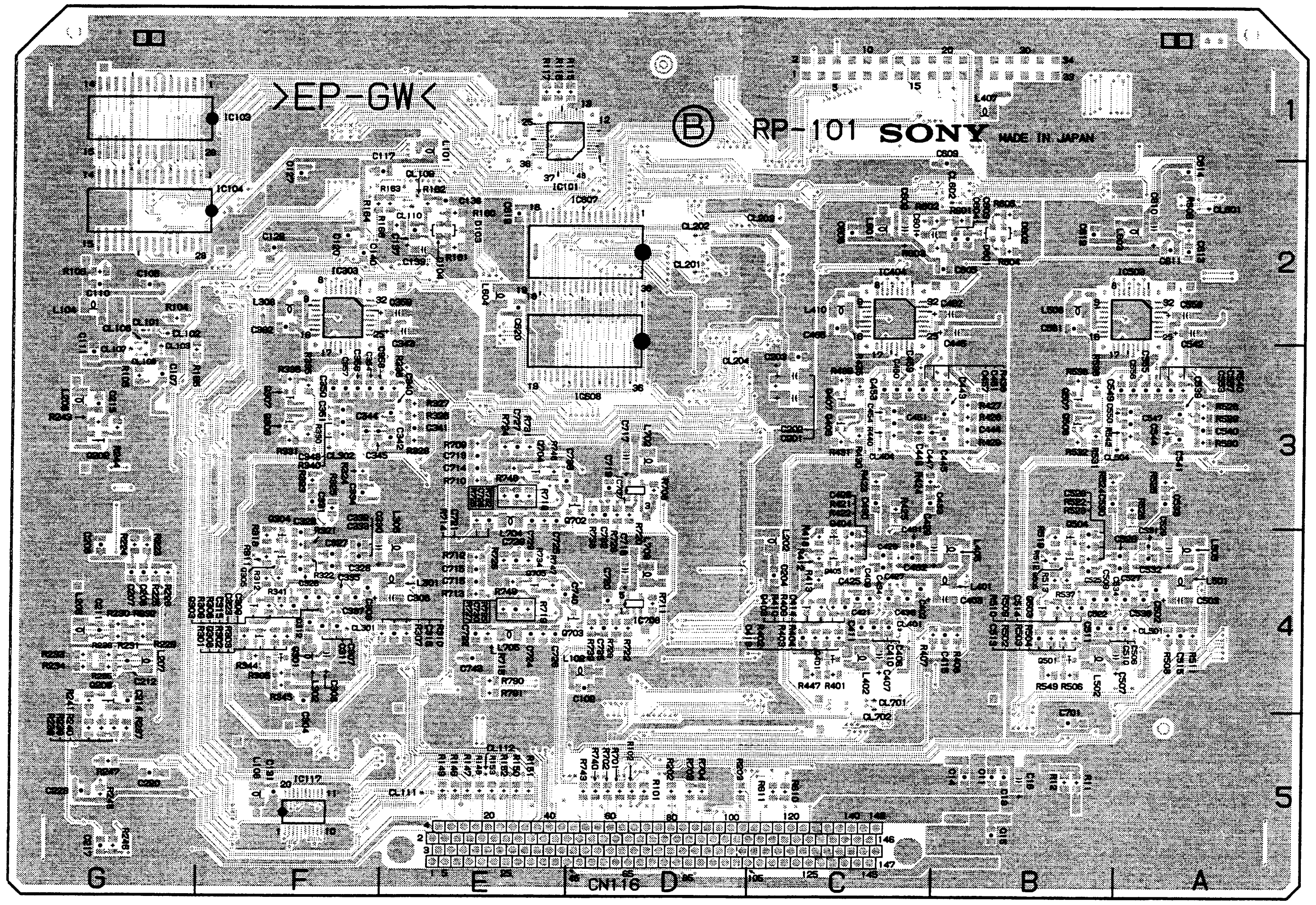

RP-101 -B SIDE-
SUFFIX : -13
MODEL DSR-80/80P

RP-101 (1-664-942-13)

*: B SIDE

CN1	C1	IC104	* G2	IC601	C2	L205	G4	L510	B4	Q403	* C4	RB606	B1
CN116	E5	IC105	G2	IC602	A2	L206	* G4	L601	* C2	Q404	* C4	RB607	C5
		IC106	G1	IC603	E2	L207	* G4	L602	B2	Q405	* C4	RB701	D5
D101	F3	IC107	G2	IC604	E2	L208	* G3	L603	* A2	Q406	* C3	RB702	D5
D102	F3	IC110	F2	IC605	E2	L301	* E4	L604	* E2	Q407	* C3		
D103	* E2	IC115	G3	IC606	E3	L302	* F4	L605	E3	Q501	* B4	TP301	E3
D104	* E2	IC116	F2	IC607	* D2	L303	E4	L701	E5	Q502	B4	TP302	D1
D601	* B2	IC117	* F5	IC608	* D2	L305	* E4	L702	* D3	Q503	* B4	TP303	E1
D602	* B2	IC118	F3	IC701	B5	L306	E2	L704	* E3	Q504	* B4	TP401	B3
		IC201	C4	IC702	F5	L307	F2	L706	* F5	Q505	* B4	TP402	E1
E201	A5	IC202	C4	IC703	C5	L308	* F2	L707	* E4	Q506	* B3	TP501	A3
E401	F5	IC203	G3	IC704	B5	L309	F2			Q507	* B3	TP502	E1
E701	F1	IC204	G4	IC705	F5	L401	* B4	PS11	B5	Q701	F5	TP601	E1
		IC205	G4	IC706	E4	L402	* C4	PS13	B5	Q702	* D3		
FL301	F4	IC206	G5	IC707	* D3	L403	B4	PS14	B5	Q703	* D4		
FL302	F3	IC207	G5	IC709	D3	L405	* B4	PS15	B5	Q704	* E3		
FL303	F3	IC208	D2			L406	C4						
FL401	C4	IC209	G5	L101	* E1	L407	* B1	Q202	* G3	RB101	D5		
FL402	C3	IC301	F4	L102	* D4	L408	B2	Q206	G5	RB102	D5		
FL403	C3	IC302	F3	L103	G1	L409	C2	Q207	G5	RB103	E1		
FL501	B4	IC303	* F2	L104	* G2	L410	* C2	Q208	* G4	RB104	D5		
FL502	B3	IC304	F4	L105	F2	L411	C2	Q301	* F4	RB105	D5		
FL503	A3	IC401	C4	L106	G3	L501	* A4	Q302	F4	RB201	D5		
FL701	E3	IC403	C3	L107	E1	L502	* B4	Q303	* F4	RB202	D5		
FL702	E3	IC404	* C2	L108	* F5	L503	A4	Q304	* F4	RB203	C5		
		IC450	B2	L109	E2	L505	* A4	Q305	* F4	RB601	C5		
IC11	B5	IC501	A4	L201	C3	L506	A2	Q306	* F3	RB602	C5		
IC101	* E1	IC502	A3	L202	* C4	L507	A2	Q307	* F3	RB603	C5		
IC102	D4	IC503	* A2	L203	* G3	L508	* B2	Q401	* C4	RB604	C1		
IC103	* G1	IC550	A2	L204	* G4	L509	A2	Q402	C4	RB605	A1		

RP-101: REC/PB HEAD AMP, RF A/D

DSR-80/80P

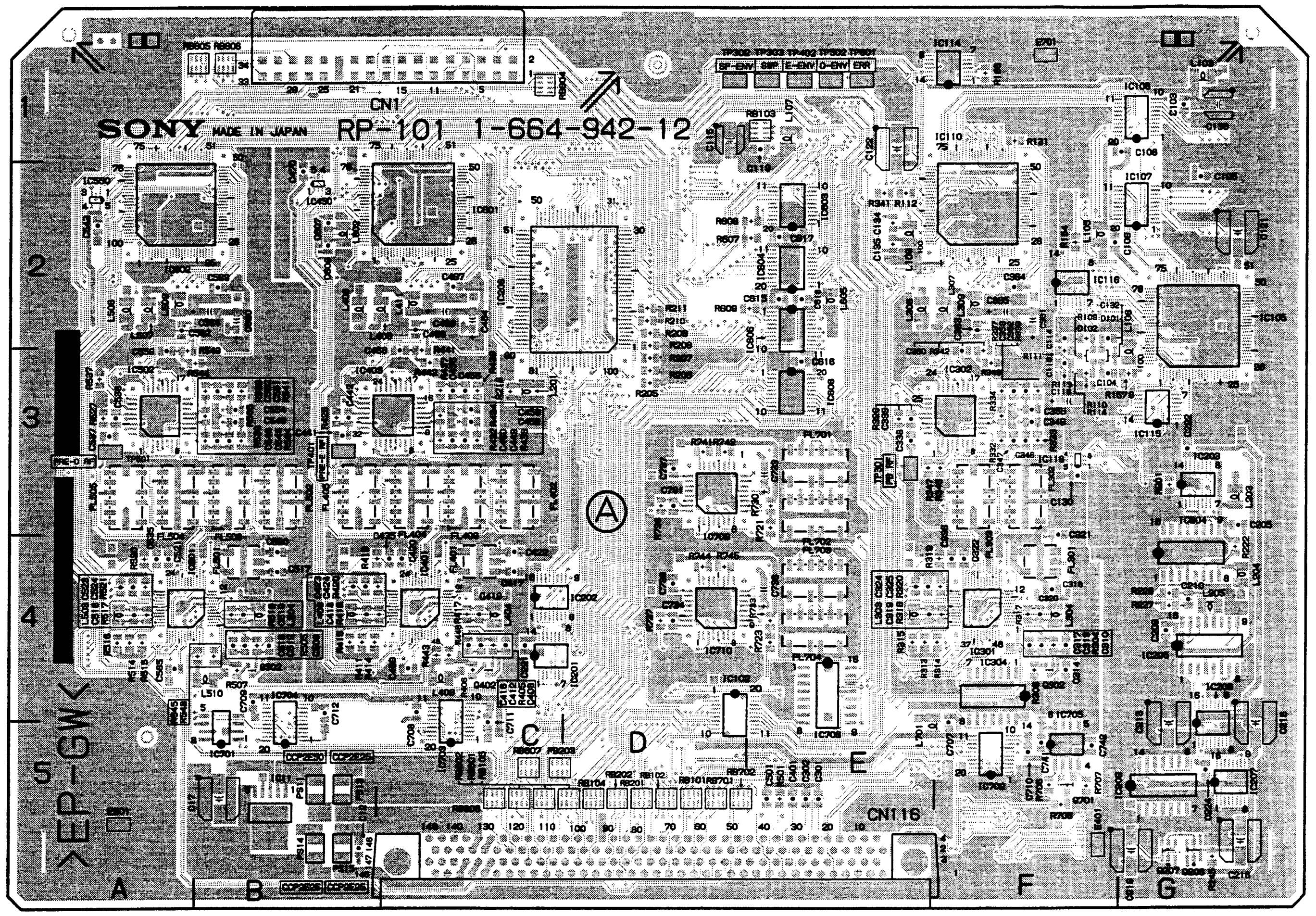

RP-101 -A SIDE-
SUFFIX : -12
MODEL DSR-80/80P

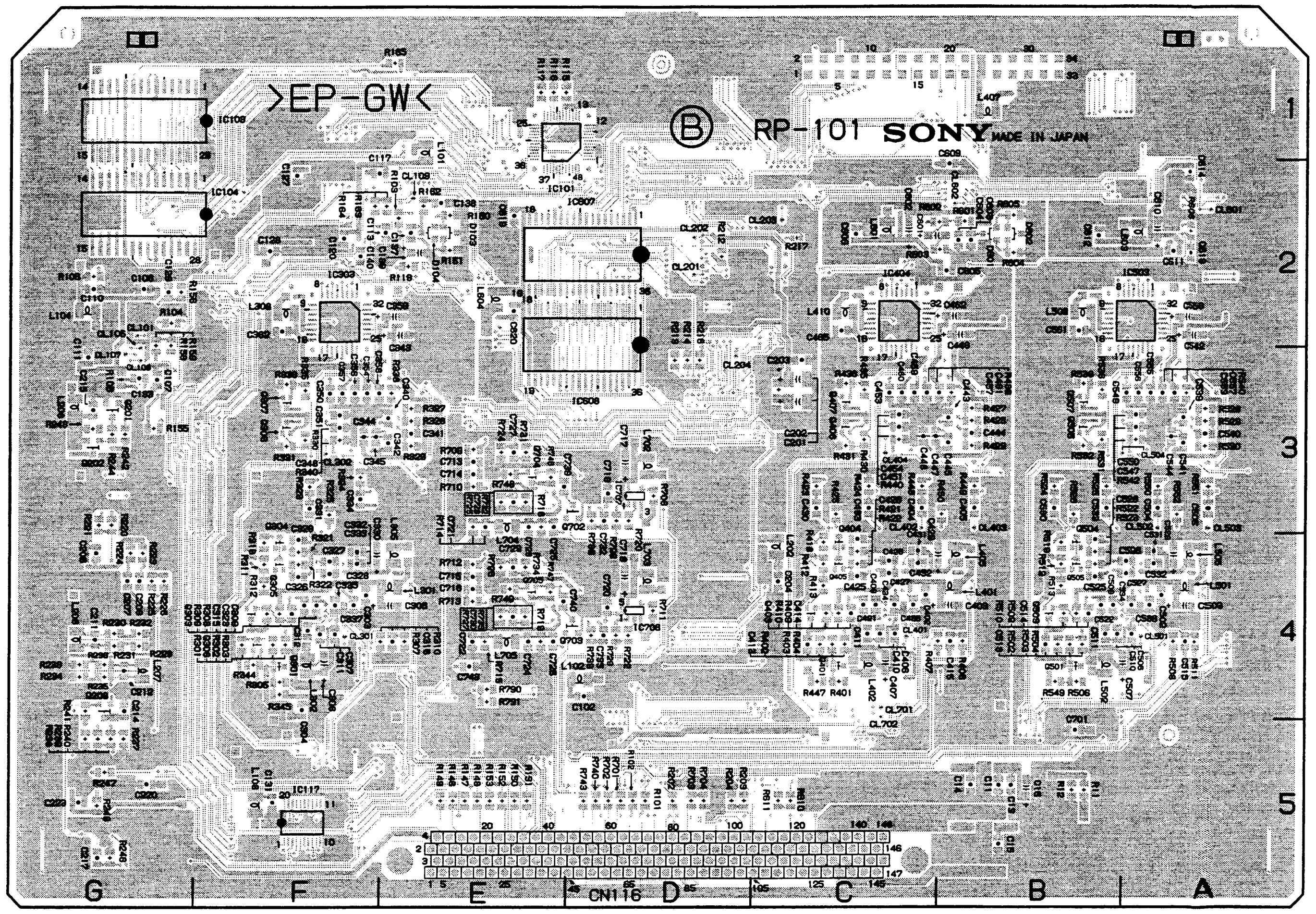

RP-101 -B SIDE-
SUFFIX : -12
MODEL DSR-80/80P

RP-101 (1-664-942-12)

*: B SIDE

Ref.	Location
CN1	C1
CN116	E5
D101	F3
D102	F3
D103	* E2
D104	* E2
D601	* B2
D602	* B2
E201	A5
E401	F5
E701	F1
FL301	F4
FL302	F3
FL303	F3
FL401	C4
FL402	C3
FL403	C3
FL501	B4
FL502	B3
FL503	A3
FL701	E3
FL702	E3
IC11	B5
IC101	* E1
IC102	D4
IC103	* G1
IC104	* G2
IC105	G2
IC106	G1
IC107	G2
IC110	F2
IC115	G3
IC116	F2
IC117	* F5
IC118	F3
IC201	C4
IC202	C4
IC203	G3
IC204	G4
IC205	G4
IC206	G5
IC207	G5
IC208	D2
IC209	G5
IC301	F4
IC302	F3
IC303	* F2
IC304	F4
IC401	C4
IC403	C3
IC404	* C2
IC450	B2
IC501	A4
IC502	A3
IC503	* A2
IC550	A2
IC601	C2
IC602	A2
IC603	E2
IC604	E2
IC605	E2
IC606	E3
IC607	* D2
IC608	* D2
IC701	B5
IC702	F5
IC703	C5
IC704	B5
IC705	F5
IC706	E4
IC707	* D3
IC709	D3
L101	* E1
L102	* D4
L103	G1
L104	* G2
L105	F2
L106	G3
L107	E1
L108	* F5
L109	E2
L201	C3
L202	* C4
L203	* G3
L204	* G4
L205	G4
L206	* G4
L207	* G4
L208	* G3
L301	* E4
L302	* F4
L303	E4
L305	* E4
L306	E2
L307	F2
L308	* F2
L309	F2
L401	* B4
L402	* C4
L403	B4
L405	* B4
L406	C4
L407	* B1
L408	B2
L409	C2
L410	* C2
L411	C2
L501	* A4
L502	* B4
L503	A4
L505	* A4
L506	A2
L507	A2
L508	* B2
L509	A2
L510	B4
L601	* C2
L602	B2
L603	* A2
L604	* E2
L605	E3
L701	E5
L702	* D3
L704	* E3
L706	* F5
L707	* E4
PS11	B5
PS13	B5
PS14	B5
PS15	B5
Q202	* G3
Q206	G5
Q207	G5
Q208	* G4
Q301	* F4
Q302	F4
Q303	* F4
Q304	* F4
Q305	* F4
Q306	* F3
Q307	* F3
Q401	* C4
Q402	C4
Q403	* C4
Q404	* C4
Q405	* C4
Q406	* C3
Q407	* C3
Q501	* B4
Q502	B4
Q503	* B4
Q504	* B4
Q505	* B4
Q506	* B3
Q507	* B3
Q701	F5
Q702	* D3
Q703	* D4
Q704	* E3
RB101	D5
RB102	D5
RB103	E1
RB104	D5
RB105	D5
RB201	D5
RB202	D5
RB203	C5
RB601	C5
RB602	C5
RB603	C5
RB604	C1
RB605	A1
RB606	B1
RB607	C5
RB701	D5
RB702	D5
TP301	E3
TP302	D1
TP303	E1
TP401	B3
TP402	E1
TP501	A3
TP502	E1
TP601	E1

DSR-80/80P

RP-101: REC/PB HEAD AMP, RF A/D

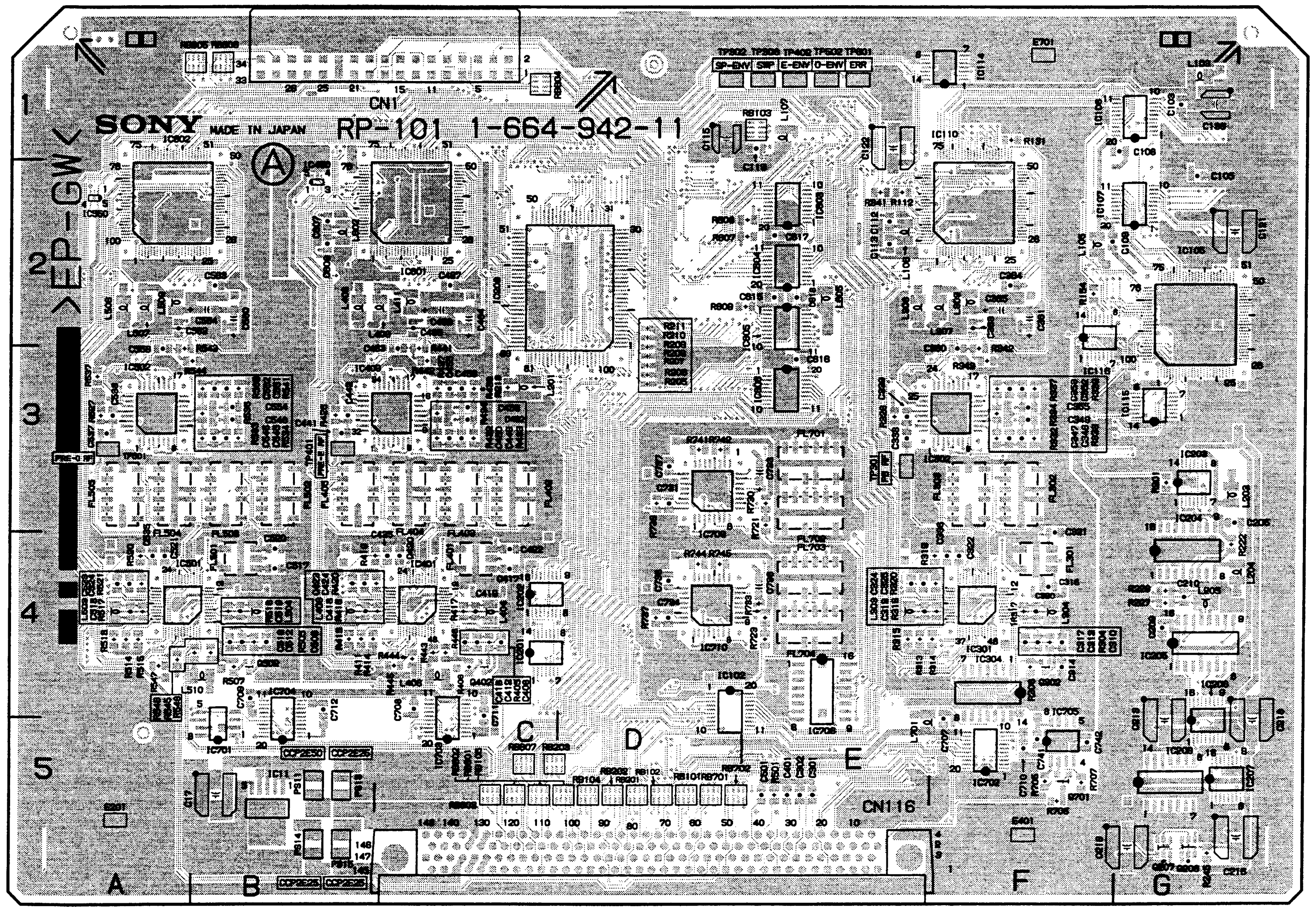

RP-101 **-A SIDE-**
SUFFIX : -11
MODEL DSR-80/80P

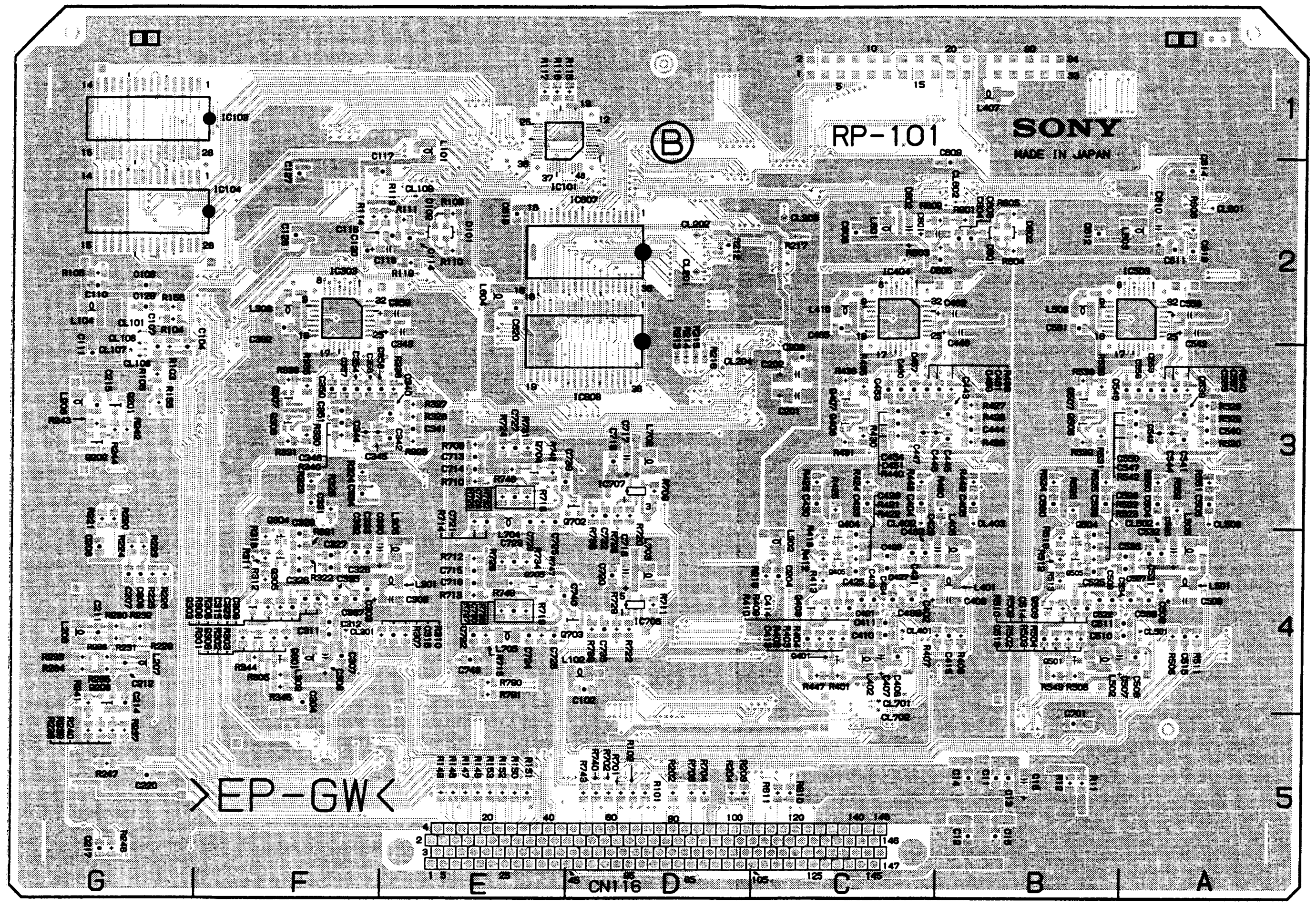

RP-101 **-B SIDE-**
SUFFIX : -11
MODEL DSR-80/80P

RP-101 (1-664-942-11)

*: B SIDE

CN1	C1	IC104	* G2	IC602	A2	L206	* G4	L601	* C2	Q402	C4	RB604	C1
CN116	E5	IC105	G2	IC603	E2	L207	* G4	L602	B2	Q403	* C4	RB605	A1
		IC106	G1	IC604	E2	L208	* G3	L603	* A2	Q404	* C4	RB606	B1
D101	* E2	IC107	G2	IC605	E2	L301	* E4	L604	* E2	Q405	* C4	RB607	C5
D102	* E2	IC110	F2	IC606	E3	L302	* F4	L605	E2	Q406	* C3	RB701	D5
D601	* B2	IC114	F1	IC607	* D2	L303	E4	L701	E5	Q407	* C3	RB702	D5
D602	* B2	IC115	G3	IC608	* D2	L305	* E4	L702	* D3	Q501	* B4		
		IC116	F2	IC701	B5	L306	E2	L703	* D4	Q502	B4	TP301	E3
E201	A5	IC201	C4	IC702	F5	L307	F2	L704	* E3	Q503	* B4	TP302	D1
E401	F5	IC202	C4	IC703	C5	L308	* F2	L705	* E4	Q504	* B4	TP303	E1
E701	F1	IC203	G3	IC704	B5	L309	F2			Q505	* B4	TP401	B3
		IC204	G4	IC705	F5	L401	* B4	PS11	B5	Q506	* B3	TP402	E1
FL301	F4	IC205	G4	IC706	E4	L402	* C4	PS13	B5	Q507	* B3	TP501	A3
FL302	F3	IC206	G5	IC707	* D3	L403	B4	PS14	B5	Q701	F5	TP502	E1
FL303	F3	IC207	G5	IC708	* D4	L405	* B4	PS15	B5	Q702	* D3	TP601	E1
FL401	C4	IC208	D2	IC709	D3	L406	C4			Q703	* D4		
FL402	C3	IC209	G5	IC710	D4	L407	* B1	Q201	* G3	Q704	* E3		
FL403	C3	IC301	F4			L408	B2	Q202	* G3	Q705	* E4		
FL501	B4	IC302	F3	L101	* E1	L409	C2	Q206	G5				
FL502	B3	IC303	* F2	L102	* D4	L410	* C2	Q207	G5	RB101	D5		
FL503	B3	IC304	F4	L103	G1	L411	C2	Q208	* G4	RB102	D5		
FL701	E3	IC401	C4	L104	* G2	L501	* A4	Q301	* F4	RB103	E1		
FL702	E3	IC403	C3	L105	F2	L502	* B4	Q302	F4	RB104	D5		
FL703	E4	IC404	* C2	L106	E2	L503	A4	Q303	* F4	RB105	D5		
FL704	E4	IC450	B2	L107	E1	L505	* A4	Q304	* F4	RB201	D5		
		IC501	A4	L201	C3	L506	A2	Q305	* F4	RB202	D5		
IC11	B5	IC502	A3	L202	* C4	L507	A2	Q306	* F3	RB203	C5		
IC101	* E1	IC503	* A2	L203	G3	L508	* B2	Q307	* F3	RB601	C5		
IC102	D4	IC550	A2	L204	G4	L509	A2	Q308	* F4	RB602	C5		
IC103	* G1	IC601	C2	L205	G4	L510	B4	Q401	* C4	RB603	C5		

 PRE-39, PTC-84

PRE-39: PB DIGITAL PROCESS
PTC-84: TH/UNTH END SENSOR

PRE-39 (1-664-949-11)

*: B SIDE

CN201	A2
CN202	D1
E201	B1
IC201	D1
L201	C1
L202	C2
PS1	A2
PS2	A2
TP201	B2
TP202	B2

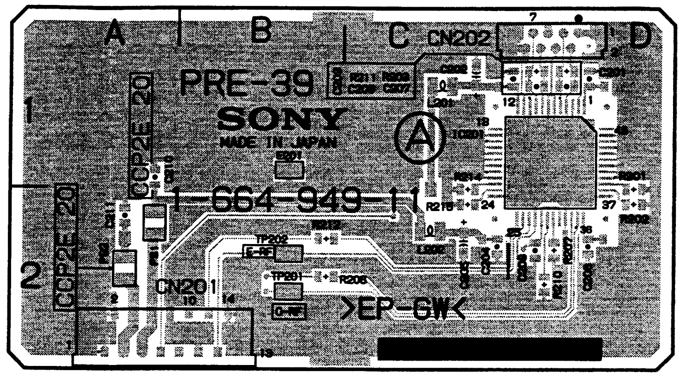

PRE-39 **-A SIDE-**
SUFFIX : -11
MODEL DSR-60/60P

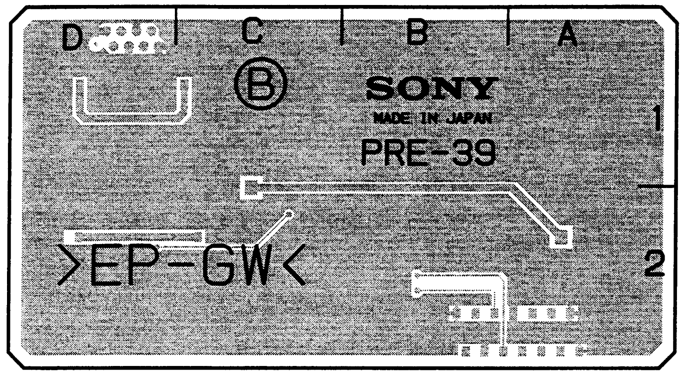

PRE-39 **-B SIDE-**
SUFFIX : -11
MODEL DSR-60/60P

PTC-84 (1-662-908-12)

*: B SIDE

CN220	A1
CN222	A1
CN223	A1
CN224	A1
PH1	A1
PH2	A1

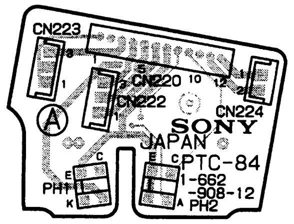

PTC-84 **-A SIDE-**
SUFFIX : -12
MODEL DSR-80/80P/60/60P

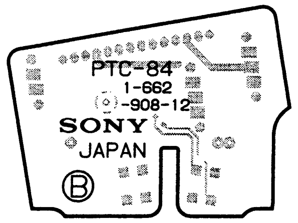

PTC-84 **-B SIDE-**
SUFFIX : -12
MODEL DSR-80/80P/60/60P

 PTC-85, PTC-86, PTC-87

PTC-85: TAPE TOP SENSOR
PTC-86: TAPE END SENSOR
PTC-87: TAPE TOP/END LED

PTC-85 (1-662-909-11)

*: B SIDE

CN26	A4
Q1	A1

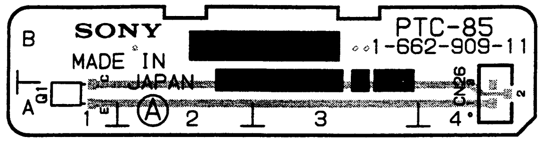

PTC-85 -A SIDE-
SUFFIX : -11
MODEL DSR-80/80P/60/60P

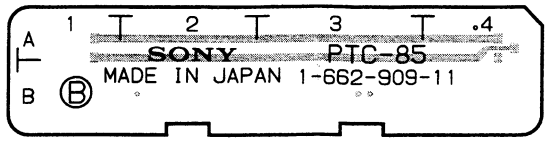

PTC-85 -B SIDE-
SUFFIX : -11
MODEL DSR-80/80P/60/60P

PTC-86 (1-662-910-11)

*: B SIDE

CN24	B3
CN25	A4
Q1	B1

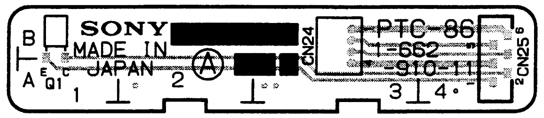

PTC-86 -A SIDE-
SUFFIX : -11
MODEL DSR-80/80P/60/60P

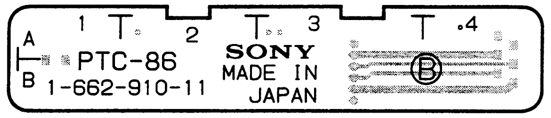

PTC-86 -B SIDE-
SUFFIX : -11
MODEL DSR-80/80P/60/60P

PTC-87 -A SIDE-
SUFFIX : -11
MODEL DSR-80/80P/60/60P

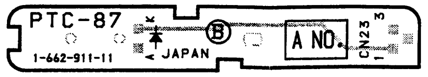

PTC-87 -B SIDE-
SUFFIX : -11
MODEL DSR-80/80P/60/60P

PTC-88: THREAD FG SENSOR
RM-159: S REEL CONNECTION
RM-160: T REEL CONNECTION

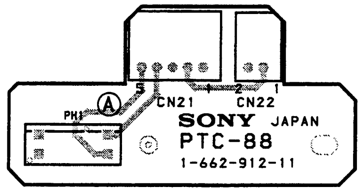

PTC-88 **-A SIDE-**
SUFFIX : -11
MODEL DSR-80/80P/60/60P

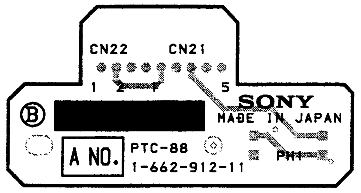

PTC-88 **-B SIDE-**
SUFFIX : -11
MODEL DSR-80/80P/60/60P

RM-159 (1-662-916-11)

*: B SIDE

CN11	A3
CN12	B2
CN13	B3
CN14	B3

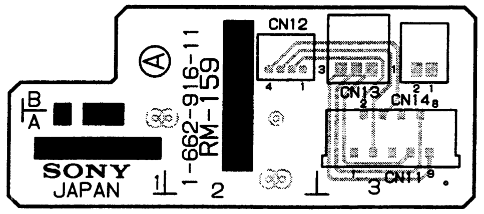

RM-159 **-A SIDE-**
SUFFIX : -11
MODEL DSR-80/80P/60/60P

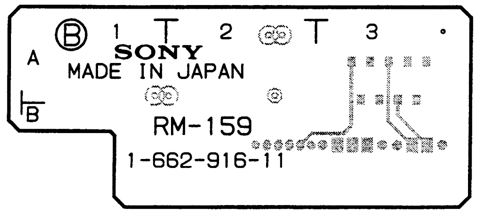

RM-159 **-B SIDE-**
SUFFIX : -11
MODEL DSR-80/80P/60/60P

RM-160 (1-662-919-11)

*: B SIDE

CN15	B3
CN16	A2
CN17	A3
CN18	A3

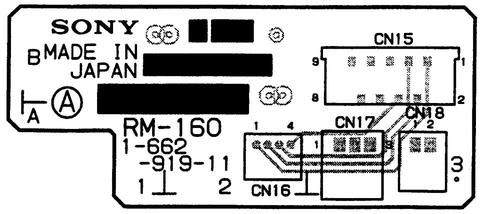

RM-160 **-B SIDE-**
SUFFIX : -11
MODEL DSR-80/80P/60/60P

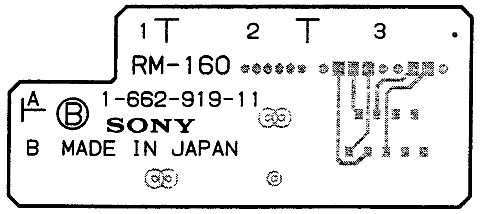

RM-160 **-B SIDE-**
SUFFIX : -11
MODEL DSR-80/80P/60/60P

DSR-60/60P

RP-103: HEAD AMP

RP-103 (1-664-938-11)

*: B SIDE

CN101	C1
CN116	D7
D201	B6
D202	* B6
E101	B4
E102	D1
FL101	D5
FL102	C5
FL103	C5
FL201	C1
FL202	C1
IC102	C6
IC103	C4
IC201	C3
IC202	B2
IC203	B3
IC204	C2
IC205	A4
IC206	B5
IC207	B6
IC208	A6
IC209	D6
L103	D6
L104	C7
L106	B6
L107	C6
L108	C5
L109	B4
L110	B1
L201	C3
L202	D2
L203	A4
L204	B4
L205	B5
L206	B6
L207	C7
L208	D7
L210	D7
L211	B2
PS1	C7
PS2	D7
Q101	* D6
Q102	* D6
Q103	* D5
Q104	* C5
Q105	* C5
Q106	D4
Q107	D4
Q201	* C2
Q202	C2
RB201	B7
RB202	B7
RB203	B7
RB204	B7
RB205	A7
RB206	A7
RB207	A7
RB208	A6
RB209	A6
TP101	B4
TP102	C4
TP103	D5
TP104	D1
TP105	D1
TP106	D1

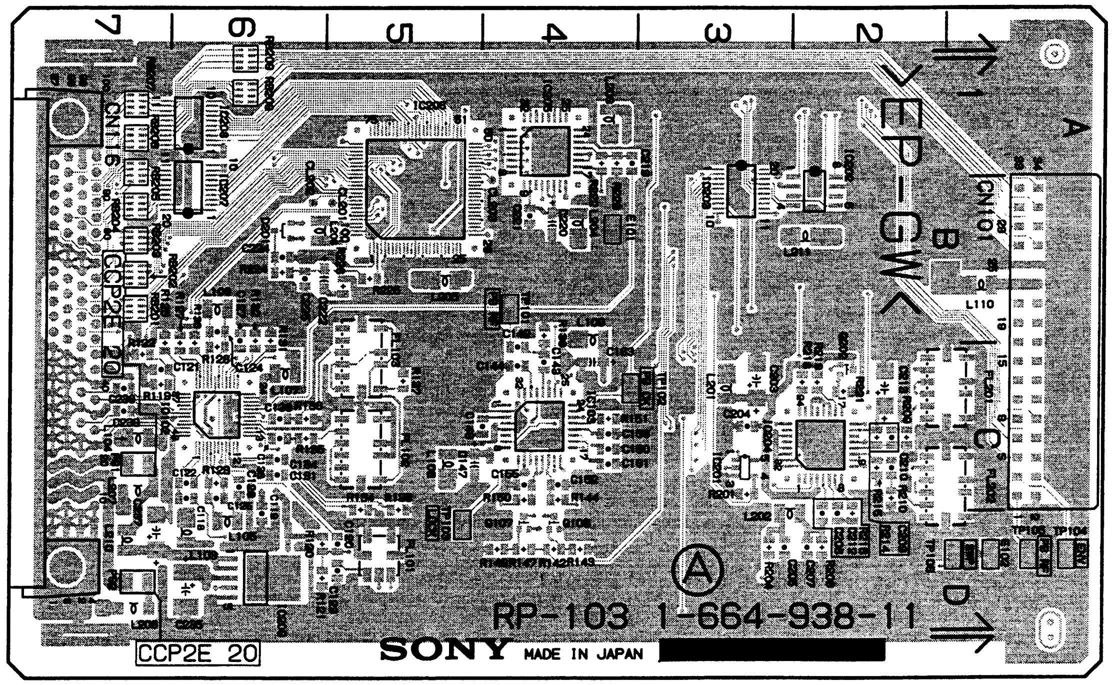

RP-103 **-A SIDE-**
SUFFIX : -11
MODEL DSR-60/60P

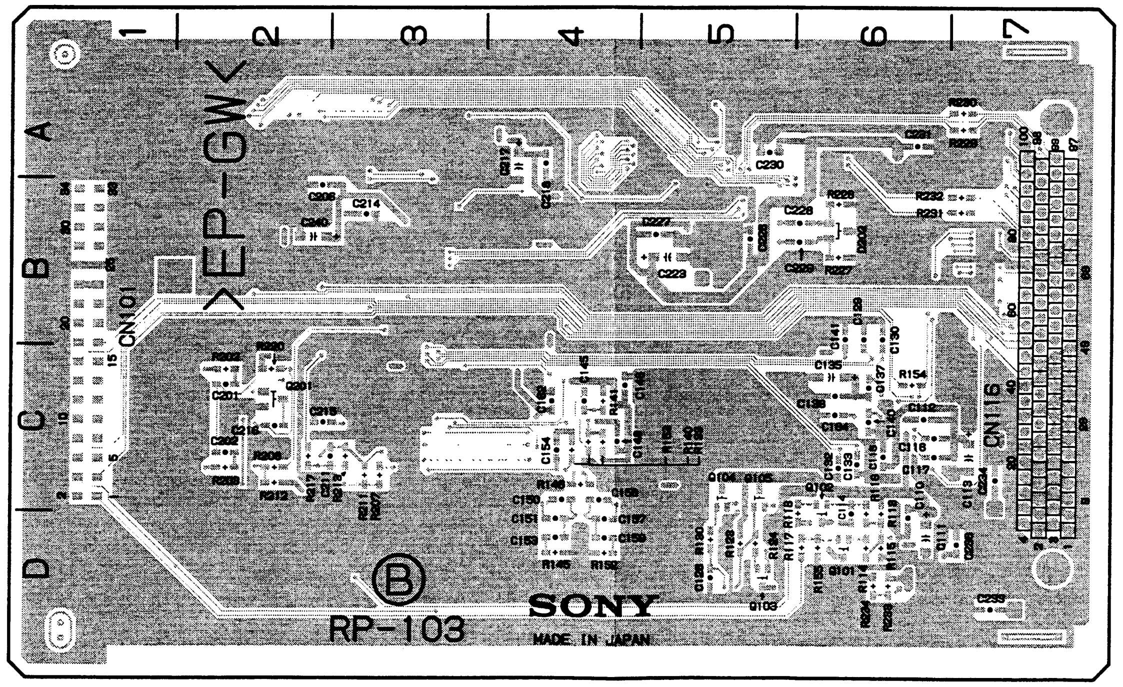

RP-103 **-B SIDE-**
SUFFIX : -11
MODEL DSR-60/60P

›NY-SP0754 / DRUCK 89

SDI-26A: QSDI OUTPUT INTERFACE (DSR-60/60P)
SDI-26: QSDI INPUT/OUTPUT INTERFACE (DSR-80/80P)

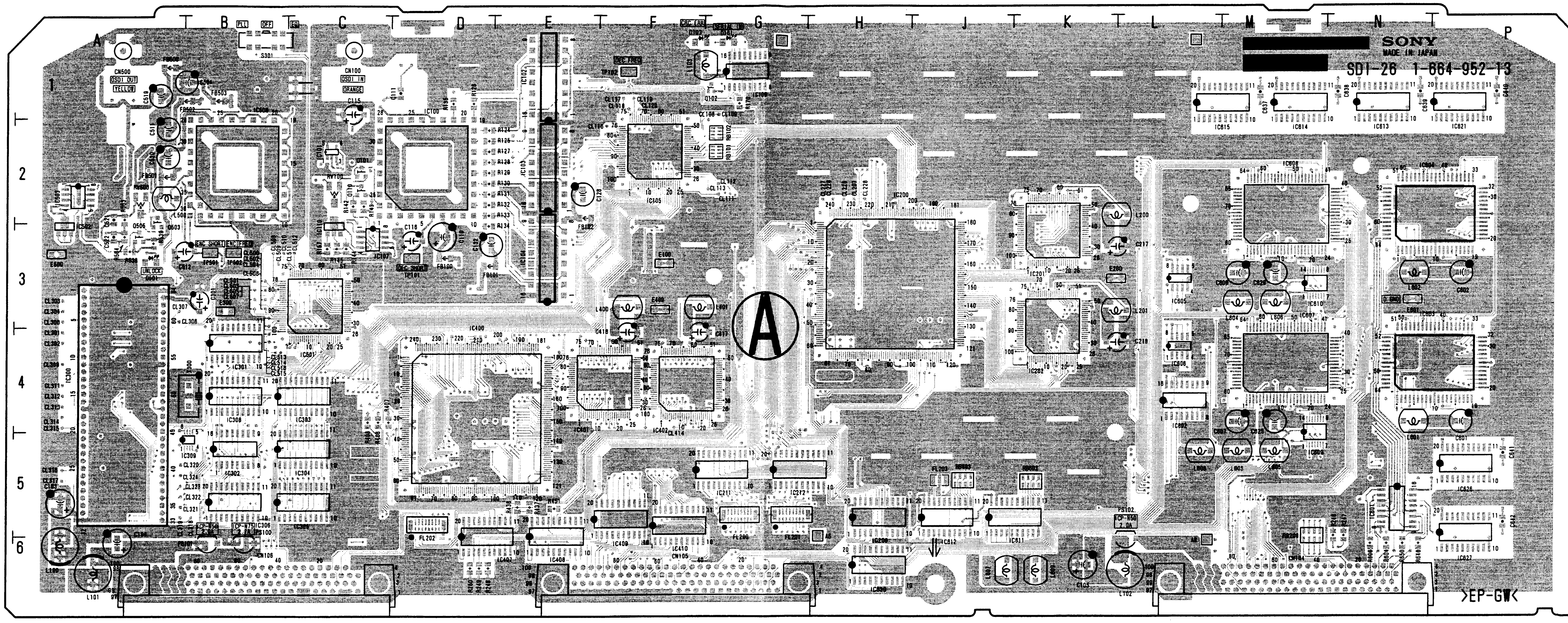

SDI-26/26A -A SIDE-
SUFFIX : -13
MODEL DSR-80/80P
MODEL DSBK-110/110P

SDI-26/26A (1-664-952-13)

*: B SIDE

CNI300	A3
CN100	C1
CN104	N6
CN105	G6
CN106	C6
CN500	A1
D100	* D3
D101	G1
D102	* D3
D103	F1
D500	* B1
D501	A3
D502	* B1
D601	* N5
D602	* N5
D603	* N5
D604	* N5
D605	* N5
D606	* N5
D607	* N5
D608	* N5
E100	F3
E200	K3
E300	B3
E400	F3
E500	A3
E601	N3
FB100	D3
FB101	D3
FB102	E2
FB500	A1
FB501	A2
FB502	B1
FB503	B1
FL200	G5
FL201	G5
FL202	D5
FL203	J5
IC100	C2
IC101	C2
IC102	E1
IC103	E2
IC104	E3
IC105	F2
IC106	G1
IC107	C3
IC110	C3
IC200	H3
IC201	K3
IC202	K3
IC207	* N5
IC208	H5
IC209	* F3
IC211	G5
IC212	G5
IC251	* F3
IC300	A3
IC301	B4
IC302	B5
IC303	C4
IC304	C5
IC305	C5
IC306	B5
IC307	* B5
IC308	B4
IC400	D4
IC401	F4
IC402	F4
IC407	D5
IC408	E5
IC409	F5
IC410	F5
IC500	B2
IC501	C3
IC502	A3
IC503	A2
IC601	N5
IC602	L4
IC603	P4
IC604	P2
IC606	L4
IC607	M4
IC608	M2
IC609	M5
IC610	M3
IC611	K5
IC612	J5
IC630	H6
L100	A6
L101	A6
L102	L6
L103	G1
L200	L2
L201	L3
L400	F3
L401	G3
L500	A2
L601	N4
L602	N3
L603	M5
L604	M3
L605	M5
L606	M3
L607	J6
L608	L5
PS100	B6
PS101	B6
PS102	L6
Q100	* C1
Q101	C2
Q102	G1
Q500	* A1
Q501	* A2
Q502	* A2
Q503	A2
Q504	* A2
Q506	* B3
RB101	G2
RB102	G2
RB200	M5
RB300	* A5
RB301	* C5
RB302	* B5
RB602	K5
RB603	J5
RV100	C2
RV500	A2
S301	B1
TP101	D3
TP102	F1
TP501	B3
TP502	B3
X300	B4

SONY-SP0754 / DRUCK 90

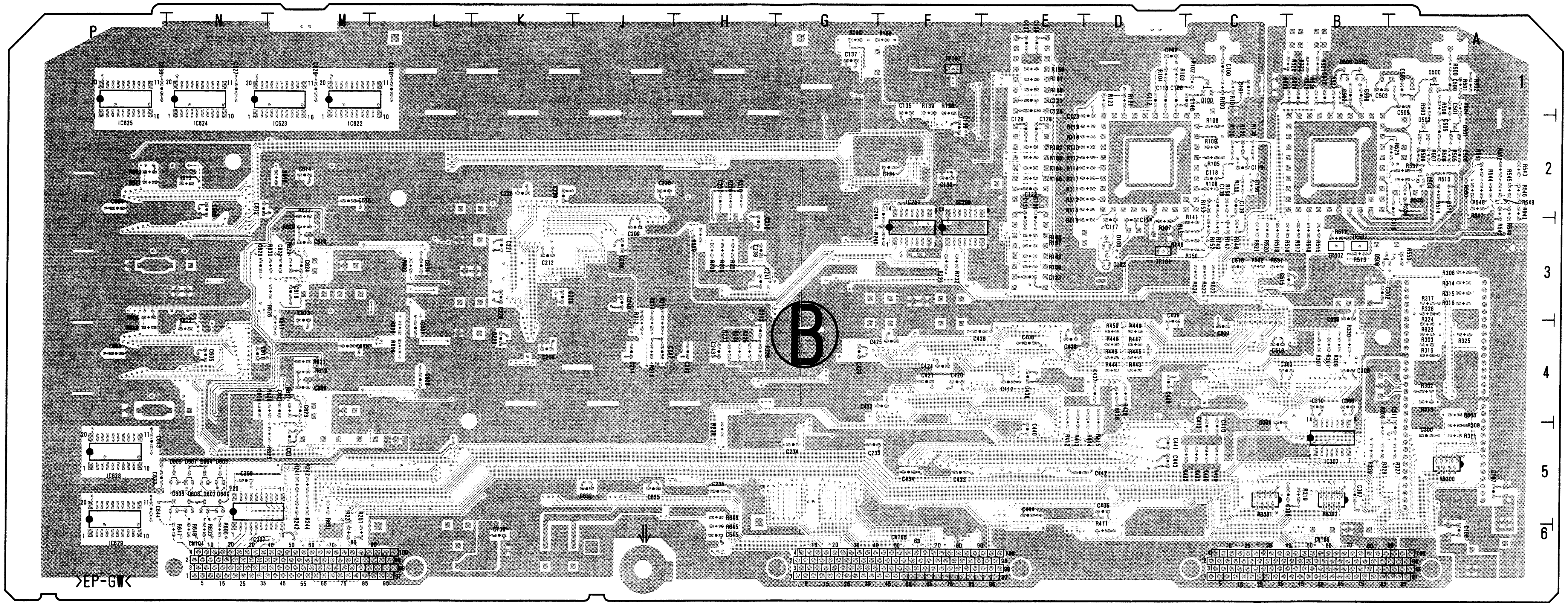

SDI-26/26A -B SIDE-

SUFFIX : -13
MODEL DSR-80/80P
MODEL DSBK-110/110P

 SDI-26/26A

SDI-26A: QSDI OUTPUT INTERFACE (DSR-60/60P)
SDI-26: QSDI INPUT/OUTPUT INTERFACE (DSR-80/80P)

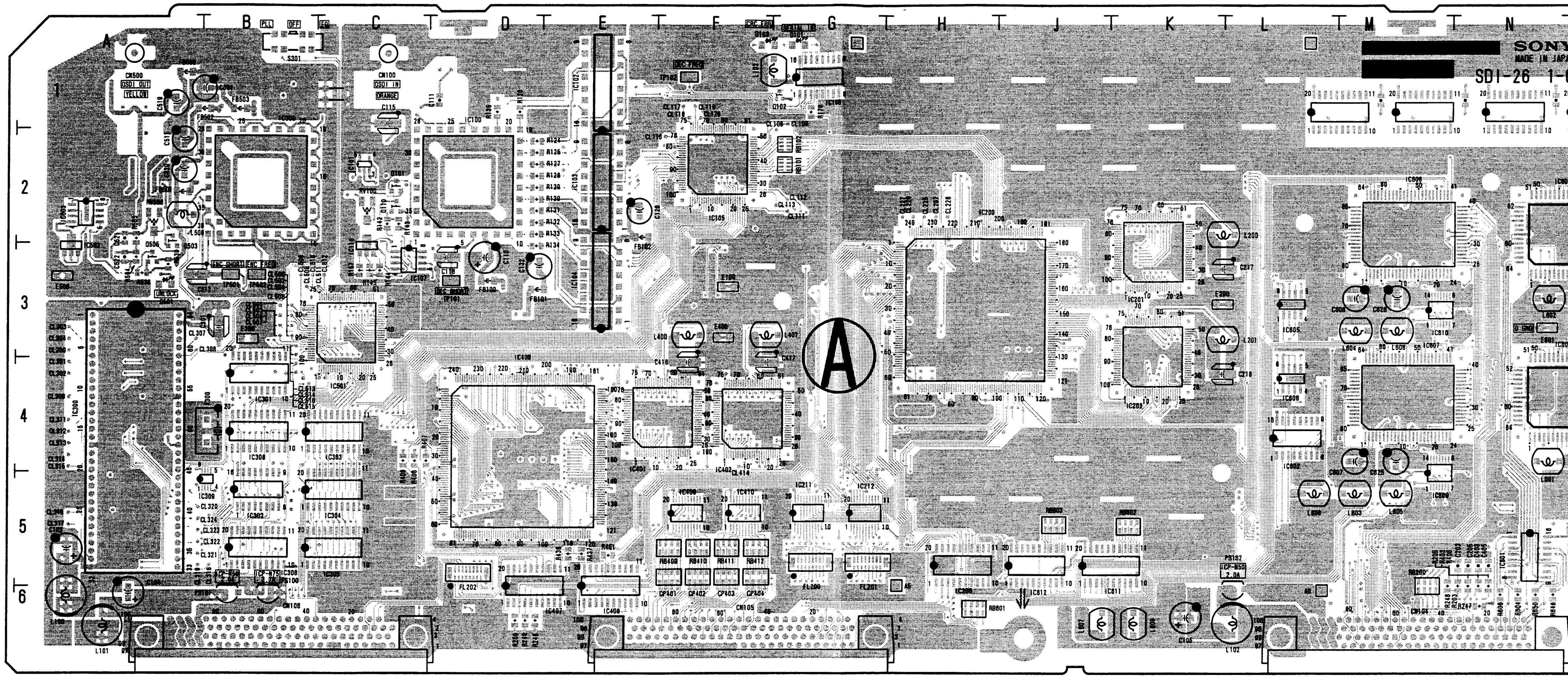

SDI-26/26A -A SIDE-

SUFFIX : -12
MODEL DSR-80/80P
MODEL DSBK-110/110P

SDI-26/26A (1-664-952-12)

*: B SIDE

CNI300	A3
CN100	C1 (#1)
CN104	N6
CN105	G6
CN106	C6
CN500	A1
CP401	F5 (#1)
CP402	F5 (#1)
CP403	F5 (#1)
CP404	F5 (#1)
D100	* D3 (#1)
D101	G1 (#1)
D102	* D3 (#1)
D103	F1 (#1)
D500	* B1
D501	A3
D502	* B1
D601	* N5 (#1)
D602	* N5 (#1)
D603	* N5 (#1)
D604	* N5 (#1)
D605	* N5 (#1)
D606	* N5 (#1)
D607	* N5 (#1)

D608	* N5 (#1)
E100	F3
E200	K3
E300	B3
E400	F3
E500	A3
E601	N3 (#1)
FB100	D3 (#1)
FB101	D3 (#1)
FB102	E2 (#1)
FB500	A1
FB501	A2
FB502	B1
FB503	B1
FL200	G5 (#1)
FL201	G5 (#1)
FL202	D5 (#1)
IC100	C2 (#1)
IC101	C2 (#1)
IC102	E1 (#1)
IC103	E2 (#1)

IC104	E3 (#1)
IC105	F2 (#1)
IC106	G1 (#1)
IC107	C3 (#1)
IC110	C3 (#1)
IC200	H3 (#1)
IC201	K3 (#1)
IC202	K3 (#1)
IC207	* N5
IC208	H5 (#1)
IC209	* F3 (#1)
IC211	G5 (#1)
IC212	G5 (#1)
IC251	* F3
IC301	B4
IC302	B5
IC303	C4
IC304	C5
IC305	C5 (#1)
IC306	B5 (#1)
IC307	* B5
IC308	B4
IC400	D4
IC401	F4
IC402	F4

IC407	D5
IC408	E5
IC409	F5
IC410	F5
IC500	B2
IC501	C3
IC502	A3
IC503	A2
IC601	N5 (#1)
IC602	L4 (#1)
IC603	P4 (#1)
IC604	P2 (#1)
IC605	L3 (#1)
IC606	L4 (#1)
IC607	M4 (#1)
IC608	M2 (#1)
IC609	M5 (#1)
IC610	M3 (#1)
IC611	K5 (#1)
IC612	J5 (#1)
IC613	N1 (#1)
IC614	M1 (#1)
IC615	M1 (#1)
L100	A6

L101	A6
L102	L6
L103	G1 (#1)
L200	L2 (#1)
L201	L3 (#1)
L400	F3
L401	G3
L500	A2
L601	N4 (#1)
L602	N3 (#1)
L603	M5 (#1)
L604	M3 (#1)
L605	M5 (#1)
L606	M3 (#1)
L607	J6 (#1)
L608	L5 (#1)
PS100	B6
PS101	B6
PS102	L6
Q100	* C1 (#1)
Q101	C2 (#1)
Q102	G1 (#1)
Q500	* A1

Q501	* A2
Q502	* A2
Q503	A2
Q504	* A2
Q506	* B3
RB101	G2 (#1)
RB102	G2 (#1)
RB200	M5 (#1)
RB300	* A5
RB301	* C5
RB302	* B5
RB409	F5 (#1)
RB410	F5 (#1)
RB411	F5 (#1)
RB412	F5 (#1)
RB601	H6 (#1)
RB602	K5 (#1)
RB603	J5 (#1)
RV100	C2 (#1)
RV500	A2
S301	B1

TP101	D3 (#1)
TP102	F1 (#1)
TP501	B3
TP502	B3
X300	B4

#1: SDI-26

 12-30 (a)

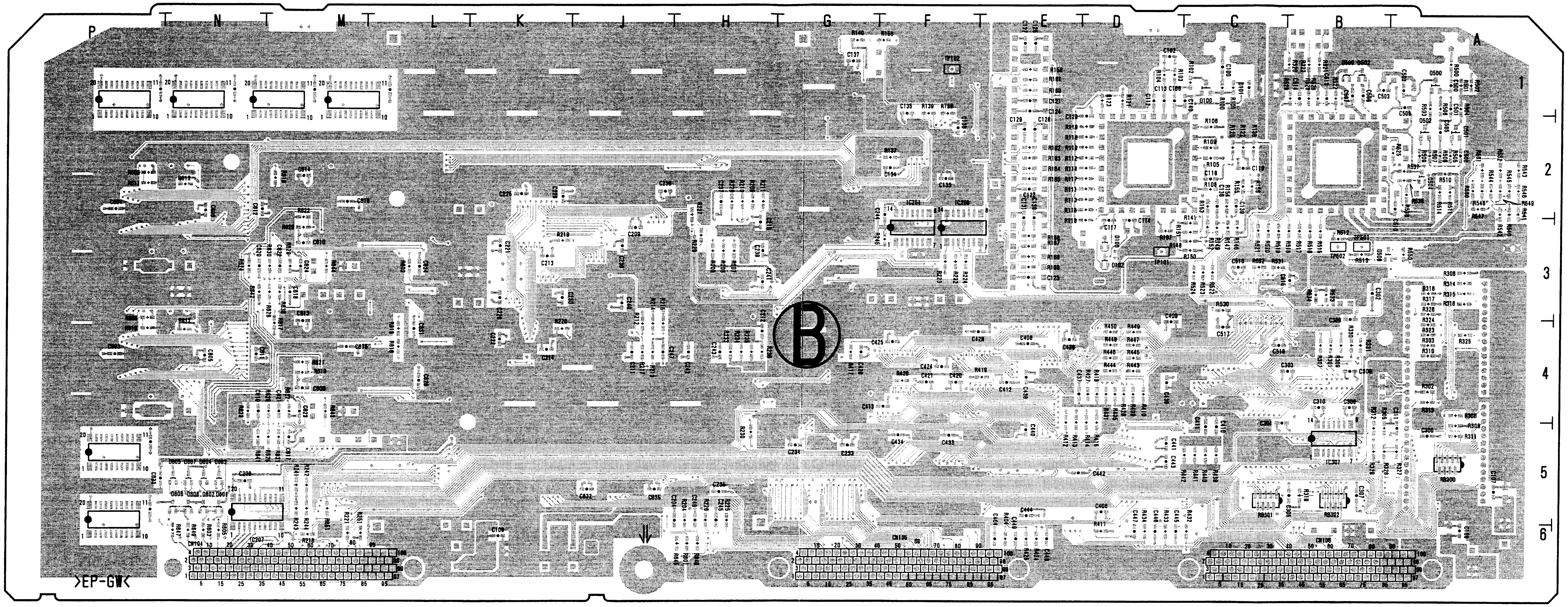

SDI-26/26A -B SIDE-

SUFFIX : -12
MODEL DSR-80/80P
MODEL DSBK-110/110P

NY-SP0754 / DRUCK 93

SDI-26A: QSDI OUTPUT INTERFACE

DSR-60/60P

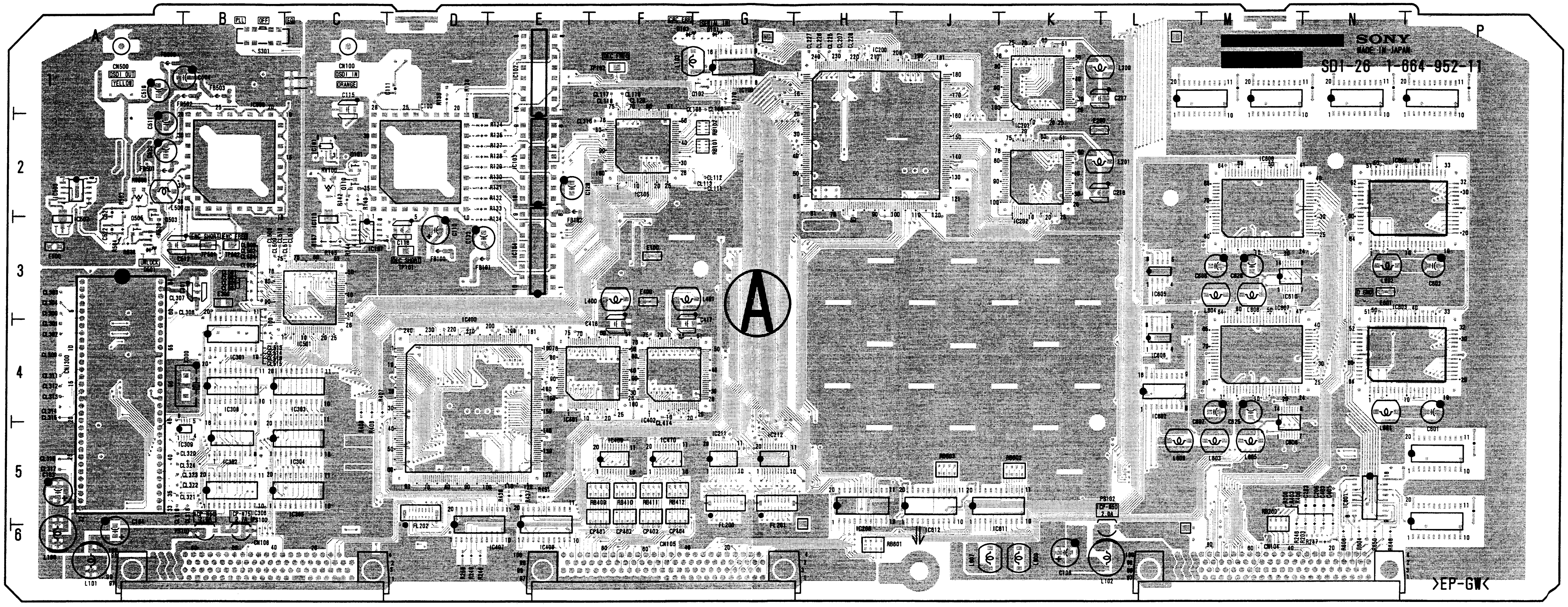

SDI-26A -A SIDE-

SUFFIX : -11
MODEL DSBK-110/110P

SDI-26A (1-664-952-11)

*: B SIDE

NI300	A3	FB503	B1	L102	L6	RV100	C2
				L400	F3	RV500	A2
CN104	N6	IC200	H2	L401	G3		
CN105	G6	IC207	* N5	L500	A2	S301	B1
CN106	C6	IC251	* F3				
CN500	A1	IC301	B4	PS100	B6	TP501	B3
		IC302	B5	PS101	B6	TP502	B3
CP401	F5	IC303	C4	PS102	L6		
CP402	F5	IC304	C5			X300	B4
CP403	F5	IC307	* B5	Q500	* A1		
CP404	F5	IC308	B4	Q501	* A2		
		IC400	D4	Q502	* A2		
D500	* B1	IC401	F4	Q503	A2		
D501	A3	IC402	F4	Q504	* A2		
D502	* B1	IC407	D5	Q506	* B3		
		IC408	E5				
E100	F3	IC409	F5	RB101	G2		
E200	K2	IC410	F5	RB102	G2		
E300	B3	IC500	B2	RB300	* A5		
E400	F3	IC501	C3	RB301	* C5		
E500	A3	IC502	A3	RB302	* B5		
		IC503	A2	RB409	F5		
FB500	A1			RB410	F5		
FB501	A2	L100	A6	RB411	F5		
FB502	B1	L101	A6	RB412	F5		

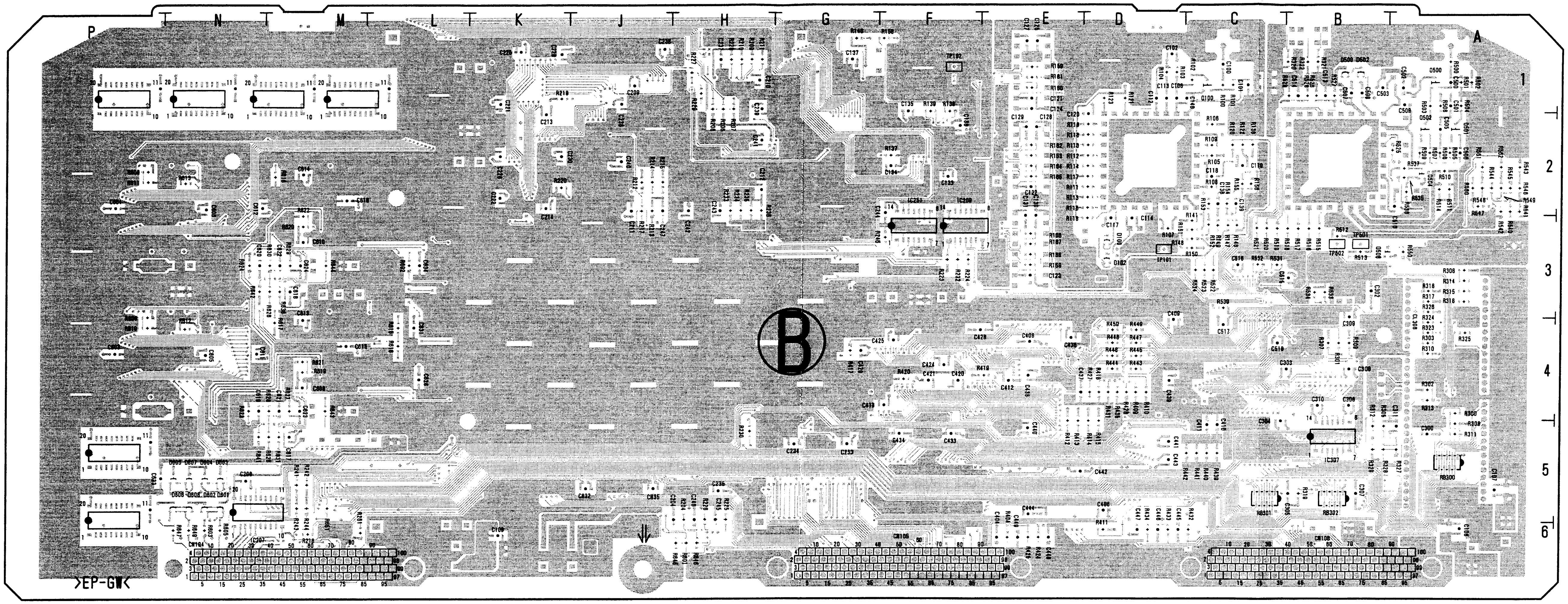

SDI-26A -B SIDE-
SUFFIX : -11
MODEL DSBK-110/110P

NY-SP0754 / DRUCK 95

DSR-80/80P

SDI-27: SDI INPUT INTERFACE

SDI-27 (1-662-903-12)

*: B SIDE

CN27	E3
CN101	A1
CN102	C1
D101	* B3
D102	E1
D103	* B3
D201	D1
D204	E1
D301	B5
D302	A5
D303	A5
D304	A5
D305	C5
D306	B5
D307	B5
D308	B5
E101	C3
E111	* C3
E301	E5
E311	* E5
FB101	B3
FB102	C1
FB104	C2
FB105	C2
FB106	C3
FB107	D3
IC101	A2
IC102	A2
IC103	D1
IC104	D2
IC105	D3
IC106	B3
IC107	A3
IC108	D1
IC201	E2
IC202	E2
IC203	E1
IC205	E3
IC206	D3
IC301	D5
IC302	D5
IC303	D4
IC304	D5
IC305	* D4
IC306	* D5
IC307	D5
IC308	A5
IC309	B4
IC310	B5
IC311	C5
IC312	A5
IC313	A4
IC314	A5
IC315	A3
IC316	* D4
IC317	* C4
L201	D4
L202	D4
L203	D4
Q102	* A1
Q103	A2
Q104	* C1
Q105	* C1
Q106	* C1
Q201	* E2
RB201	* E3
RB202	* E3
RB203	* D3
RB301	* E5
RB302	* E5
RB303	* E5
RB304	* E5
RB305	* C4
RB306	* D4
RV101	A2
TP101	B3
TP102	D1
TP111	* B3
TP112	* D1

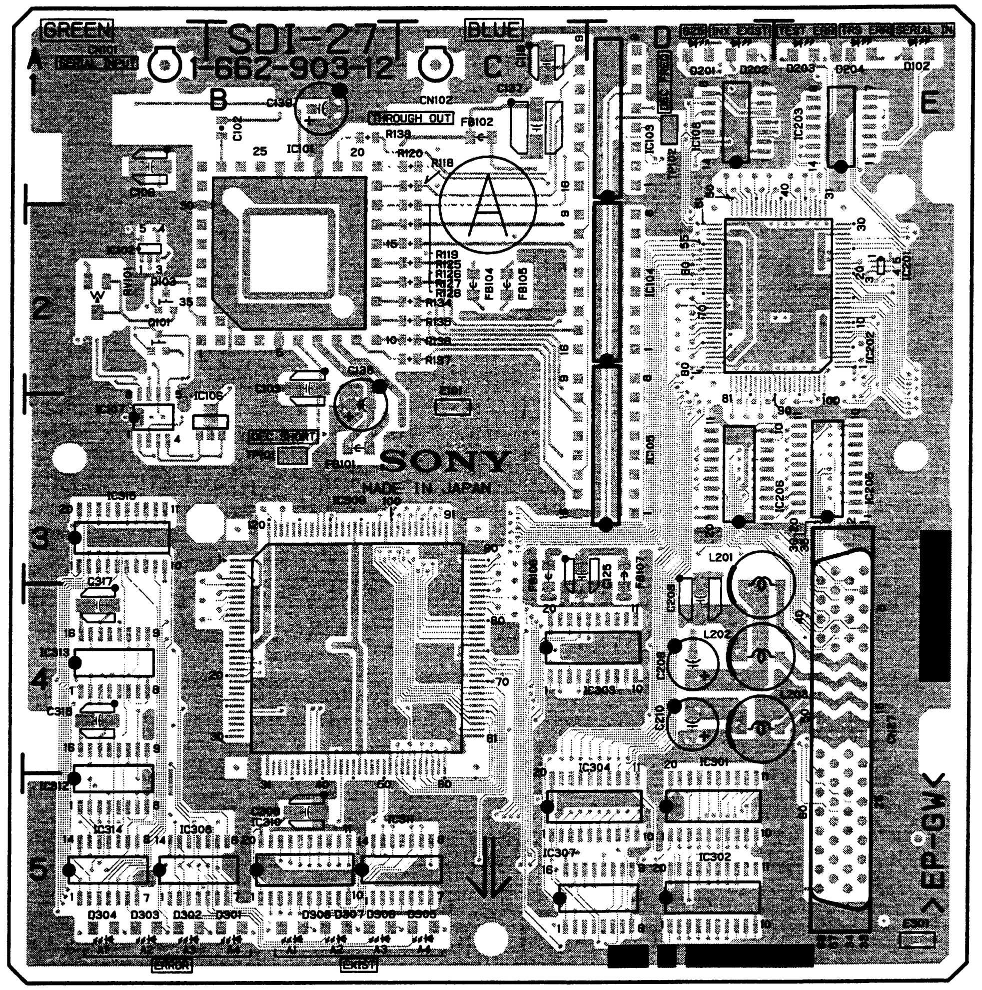

SDI-27 -A SIDE-

SUFFIX : -12
MODEL DSBK-120/120P

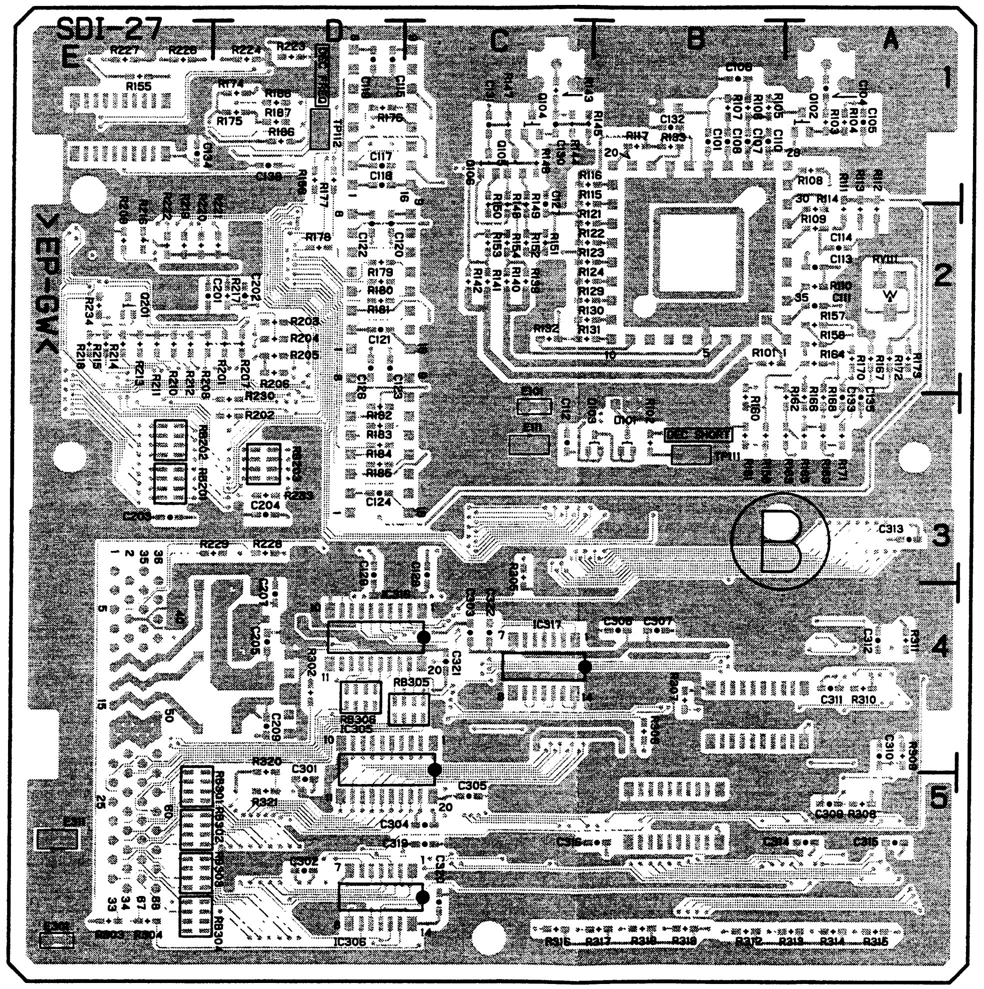

SDI-27 -B SIDE-

SUFFIX : -12
MODEL DSBK-120/120P

)NY-SP0754 / DRUCK 97

SDI-28: SDI OUTPUT INTERFACE

SDI-28 (1-662-904-12)

*: B SIDE

CNI301	B5
CN28	E5
CN201	A1
CN202	B1
D101	* C3
D201	* C1
D202	A3
D203	* B1
E201	E5
E211	* A3
E301	C5
E311	* C5
FB201	B2
FB202	B1
FB203	A1
FB204	B2
FB205	B2
IC101	* D4
IC102	* D5
IC103	C3
IC104	D2
IC105	E2
IC106	C2
IC107	D3
IC108	E3
IC109	* C4
IC110	E2
IC111	* C4
IC112	C4
IC113	D1
IC114	D4
IC115	* E2
IC116	* A5
IC201	B3
IC202	A2
IC203	A2
IC303	* B4
IC304	B4
L101	E3
L102	E4
L103	E4
L201	B2
Q101	* C4
Q102	* C4
Q103	* C4
Q201	A2
Q202	* B2
Q203	* A2
Q204	* A1
Q205	* B1
Q206	* C3
Q208	* B3
RB101	* E3
RB102	* E4
RB103	* E5
RB104	* D2
RB105	* D3
RB106	C2
RB107	D2
RB108	D2
RV201	B2
TP201	B3
TP202	C3
TP211	* B3
TP212	* C3
X301	A4

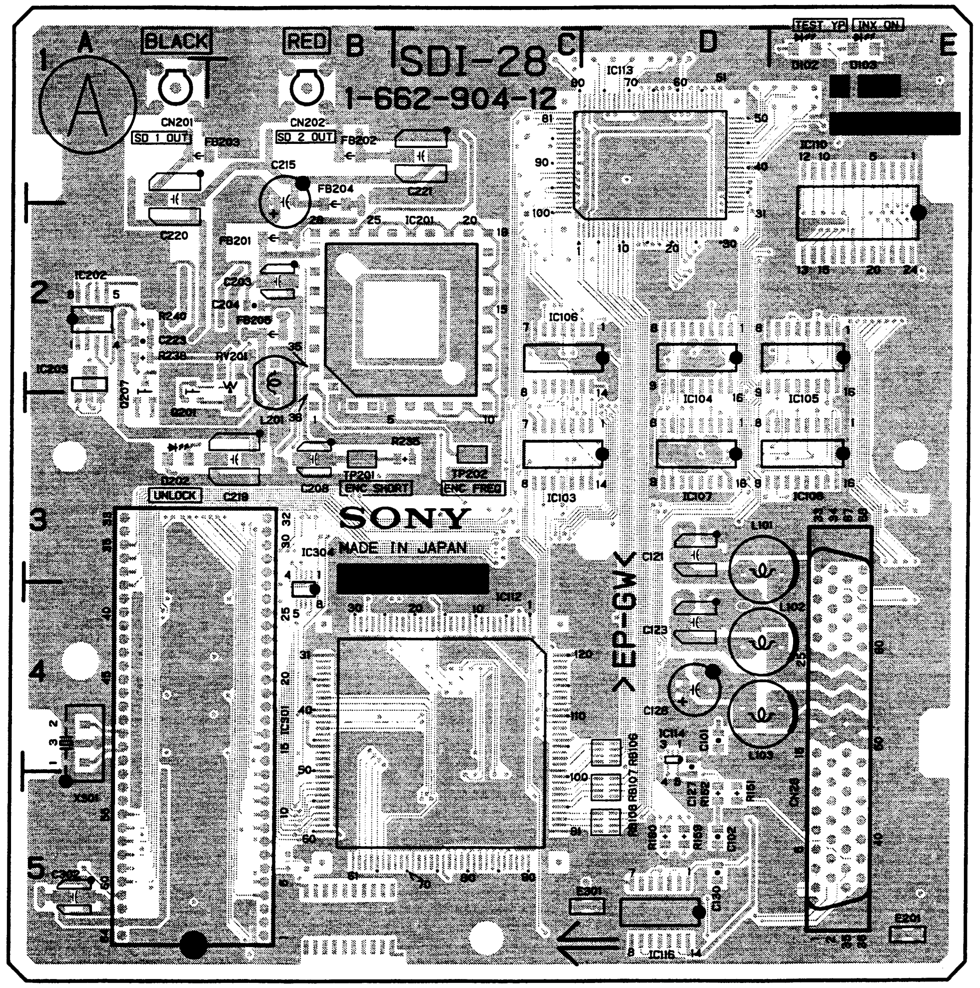

SDI-28 -A SIDE-
SUFFIX : -12
MODEL DSBK-100/100P
MODEL DSBK-120/120P

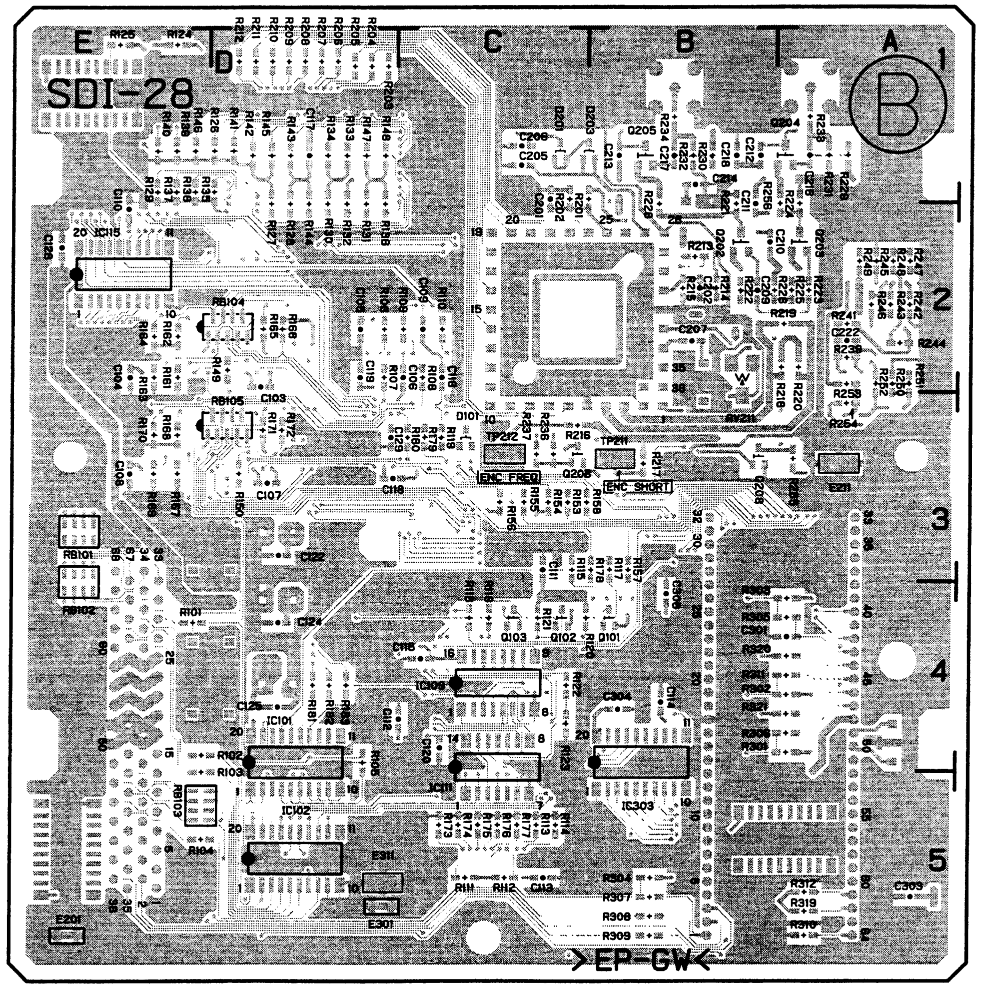

SDI-28 -B SIDE-
SUFFIX : -12
MODEL DSBK-100/100P
MODEL DSBK-120/120P

 SE-315, SE-361

SE-315: S REEL FG SENSOR
SE-361: T REEL FG SENSOR

SE-315 (1-662-914-11)	
*: B SIDE	
CN61	A1
IC1	* A1

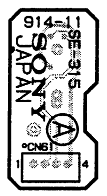

SE-315 **-A SIDE-**
SUFFIX : -11
MODEL DSR-80/80P/60/60P

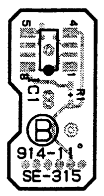

SE-315 **-B SIDE-**
SUFFIX : -11
MODEL DSR-80/80P/60/60P

SE-361 (1-662-915-11)	
*: B SIDE	
CN61	A1
IC1	* A1

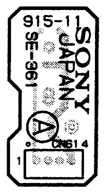

SE-361 **-A SIDE-**
SUFFIX : -11
MODEL DSR-80/80P/60/60P

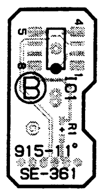

SE-361 **-B SIDE-**
SUFFIX : -11
MODEL DSR-80/80P/60/60P

)NY-SP0754 / DRUCK 99

SV-184: SERVO SYSTEM

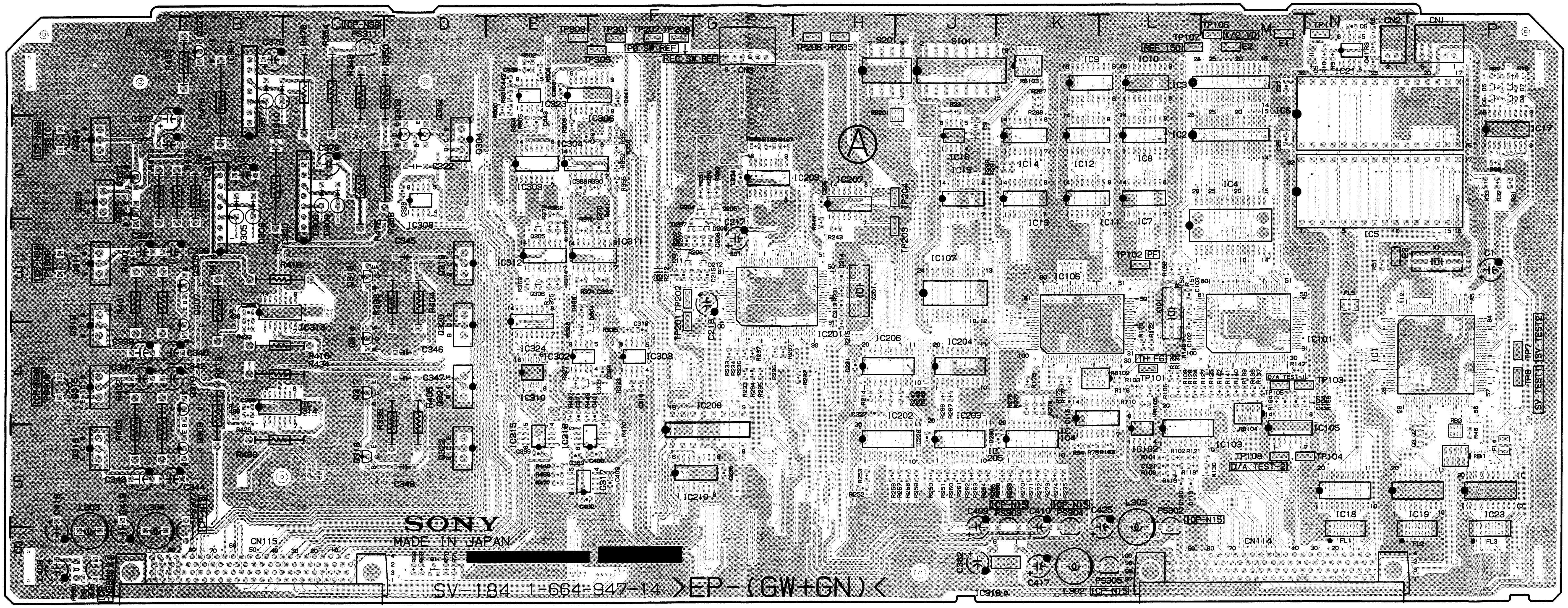

SV-184 -A SIDE-
SUFFIX : -14
MODEL DSR-80/80P/60/60P

SV-184 (1-664-947-14)

*: B SIDE

Ref.	Location
CN1	P1
CN2	N1
CN3	G1
CN114	N6
CN115	C6
D1	* P2
D2	* P2
D3	* P2
D4	* P2
D5	P1
D6	P1
D7	P1
D8	P1
D13	* P2
D14	* P2
D15	* P2
D201	* G3
D202	* G3
D205	* G3
D206	* G3
D207	F3
D208	G3
D209	* G3
D210	* G3
D211	F3
D212	G3
D303	F4
D304	F4
D305	B2
D306	C2
D307	B1
D308	B2
D309	C2
D310	B1
D311	* E5
E1	M1
E2	M1
E3	N3
FB301	A6
FL1	N6
FL2	P6
FL3	P6
FL4	P5
FL5	N3
IC1	P4
IC2	M2
IC3	M1
IC4	M3
IC5	M3
IC6	M2
IC7	L2
IC8	L2
IC9	K1
IC10	L1
IC11	K2
IC12	K2
IC13	K2
IC14	K2
IC15	J2
IC16	J2
IC17	P2
IC18	N5
IC19	P5
IC21	N1
IC23	P5
IC101	M4
IC102	L5
IC103	L5
IC104	K4
IC105	M5
IC106	K4
IC107	J3
IC201	G3
IC202	H5
IC203	J5
IC204	J4
IC205	K5
IC206	H4
IC207	H2
IC208	F5
IC209	G2
IC210	G5
IC302	E4
IC303	F4
IC304	E2
IC306	F1
IC308	D2
IC309	E2
IC310	E4
IC311	F3
IC312	E3
IC313	B3
IC314	B4
IC315	E5
IC316	F5
IC317	E5
IC318	K6
IC319	B3
IC320	C3
IC321	B2
IC323	E1
IC324	E4
L302	K6
L303	A6
L304	A6
L305	L6
PS302	L6
PS303	K6
PS304	K6
PS305	L6
PS306	A6
PS307	B6
PS308	A4
PS309	A3
PS310	A2
PS311	C1
Q1	D6
Q2	P5
Q3	P5
Q201	* H4
Q202	* H4
Q203	* H4
Q204	G2
Q205	G2
Q301	* F1
Q302	D2
Q303	D2
Q304	D2
Q305	E3
Q306	E3
Q307	B4
Q308	B3
Q309	B5
Q310	B4
Q311	A3
Q312	A4
Q313	C3
Q314	C4
Q315	A4
Q316	A5
Q317	C4
Q318	C5
Q319	D3
Q320	D4
Q321	D4
Q322	D5
Q323	B1
Q324	A2
Q325	A2
Q326	A2
Q327	A2
Q328	* F1
Q329	* F1
RB1	P5
RB102	K4
RB103	K1
RB201	J2
S101	J1
S201	H1
TP1	N1
TP6	P4
TP7	P4
TP101	L4
TP102	L3
TP103	M4
TP104	M5
TP105	M4
TP106	M1
TP107	L1
TP108	M5
TP201	F4
TP202	F3
TP203	H3
TP204	H2
TP205	H1
TP206	H1
TP207	F1
TP208	F1
TP301	F1
TP303	E1
TP305	F1
X1	P3
X101	L3
X201	H3

 SV-184

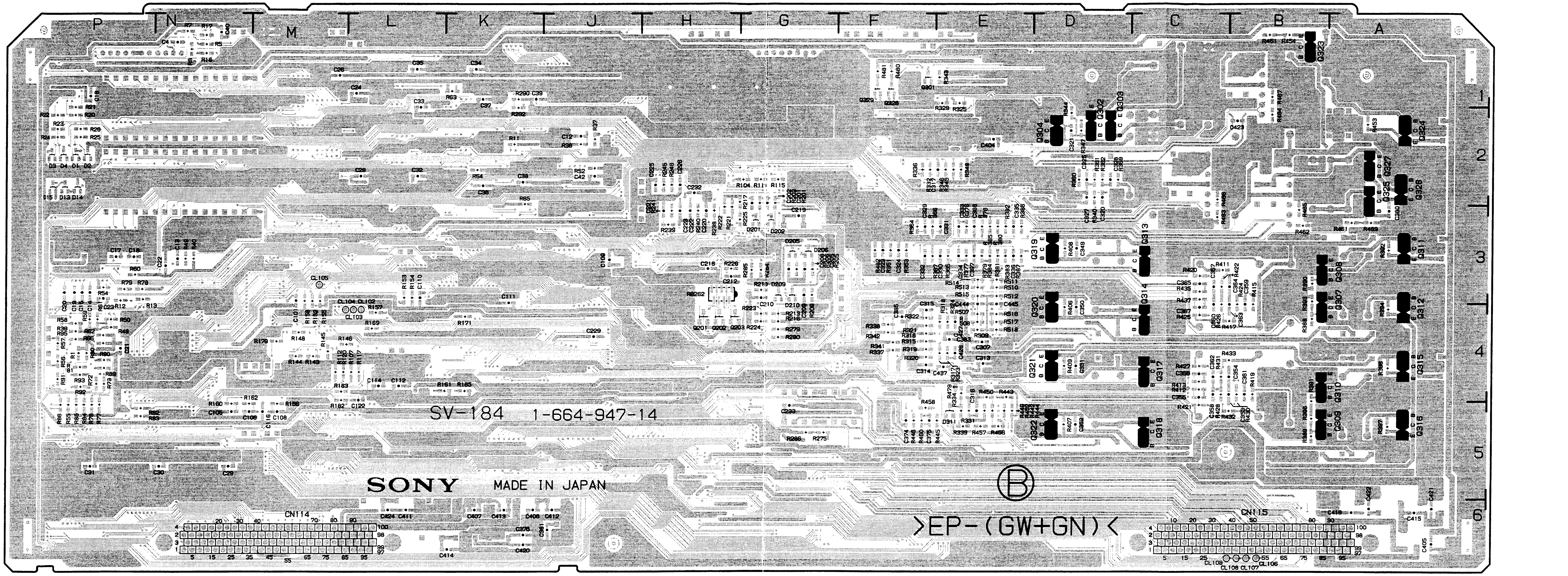

SV-184 -B SIDE-

SUFFIX : -14

MODEL DSR-80/80P/60/60P

SV-184: SERVO SYSTEM

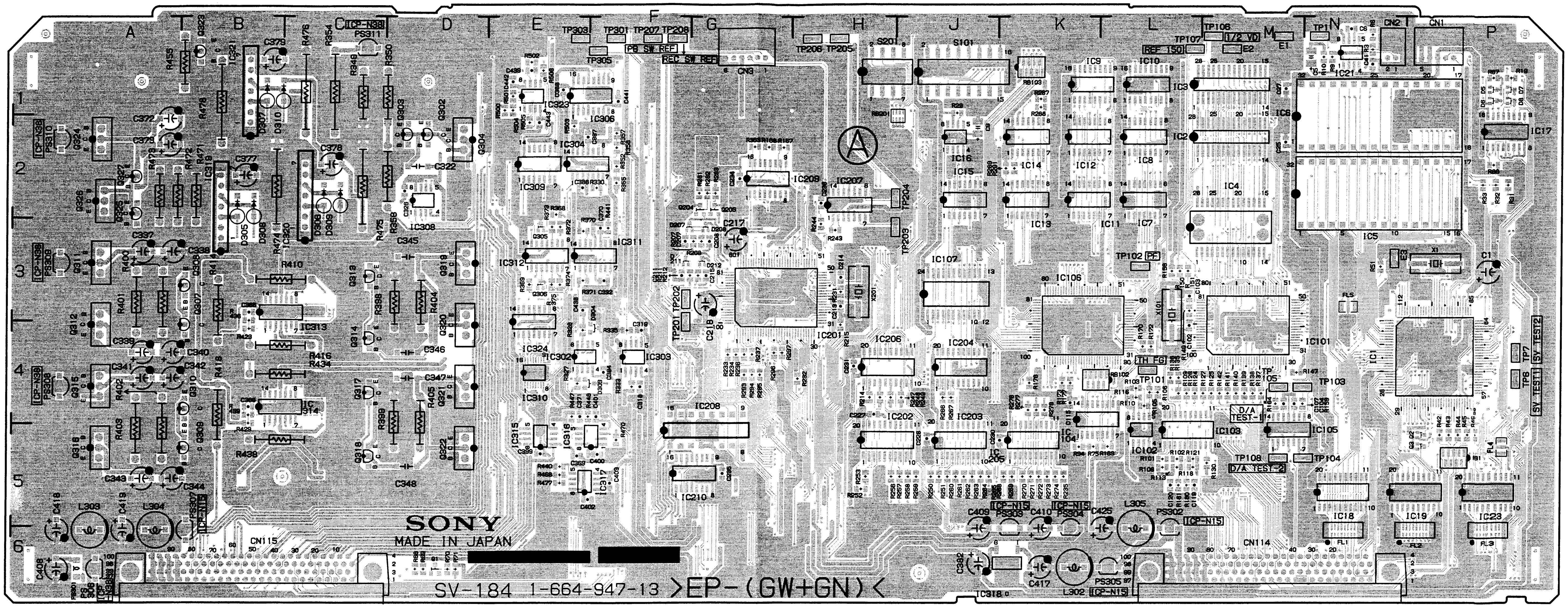

SV-184 -A SIDE-

SUFFIX : -13

MODEL DSR-80/80P/60/60P

SV-184 (1-664-947-13)

*: B SIDE

CN1	P1	D303	F4	IC6	M2	IC205	K5	L302	K6	Q304	D2	RB1	P5	TP301	F1
CN2	N1	D304	F4	IC7	L2	IC206	H4	L303	A6	Q305	E3	RB102	K4	TP303	E1
CN3	G1	D305	B2	IC8	L2	IC207	H2	L304	A6	Q306	E3	RB103	K1	TP305	F1
CN114	N6	D306	C2	IC9	K1	IC208	F5	L305	L6	Q307	B4	RB201	J2		
CN115	C6	D307	B1	IC10	L1	IC209	G2			Q308	B3			X1	P3
		D308	B2	IC11	K2	IC210	G5	PS302	L6	Q309	B5	S101	J1	X101	L3
D1	* P2	D309	C2	IC12	K2	IC302	E4	PS303	K6	Q310	B4	S201	H1	X201	H3
D2	* P2	D310	B1	IC13	K2	IC303	F4	PS304	K6	Q311	A3				
D3	* P2	D311	* E5	IC14	K2	IC304	E2	PS305	L6	Q312	A4	TP1	N1		
D4	* P2			IC15	J2	IC306	F1	PS306	A6	Q313	C3	TP6	P4		
D5	P1	E1	M1	IC16	J2	IC308	D2	PS307	B6	Q314	C4	TP7	P4		
D6	P1	E2	M1	IC17	P2	IC309	E2	PS308	A4	Q315	A4	TP101	L4		
D7	P1	E3	N3	IC18	N5	IC310	E4	PS309	A3	Q316	A5	TP102	L3		
D8	P1			IC19	P5	IC311	F3	PS310	A2	Q317	C4	TP103	M4		
D13	* P2	FB301	A6	IC21	N1	IC312	E3	PS311	C1	Q318	C5	TP104	M5		
D14	* P2			IC23	P5	IC313	B3			Q319	D3	TP105	M4		
D15	* P2	FL1	N6	IC101	M4	IC314	B4	Q1	D6	Q320	D4	TP106	M1		
D201	* G3	FL2	P6	IC102	L5	IC315	E5	Q2	P5	Q321	D4	TP107	L1		
D202	* G3	FL3	P6	IC103	L5	IC316	F5	Q3	P5	Q322	D5	TP108	M5		
D205	* G3	FL4	P5	IC104	K4	IC317	E5	Q201	* H4	Q323	B1	TP201	F4		
D206	* G3	FL5	N3	IC105	M5	IC318	K6	Q202	* H4	Q324	A2	TP202	F3		
D207	F3			IC106	K4	IC319	B3	Q203	* H4	Q325	A2	TP203	H3		
D208	G3	IC1	P4	IC107	J3	IC320	C3	Q204	G2	Q326	A2	TP204	H2		
D209	* G3	IC2	M2	IC201	G3	IC321	B2	Q205	G2	Q327	A2	TP205	H1		
D210	* G3	IC3	M1	IC202	H5	IC323	E1	Q301	* F1	Q328	* F1	TP206	H1		
D211	F3	IC4	M3	IC203	J5	IC324	E4	Q302	D2	Q329	* F1	TP207	F1		
D212	G3	IC5	M3	IC204	J4			Q303	D2			TP208	F1		

SONY-SP0754 / DRUCK 102

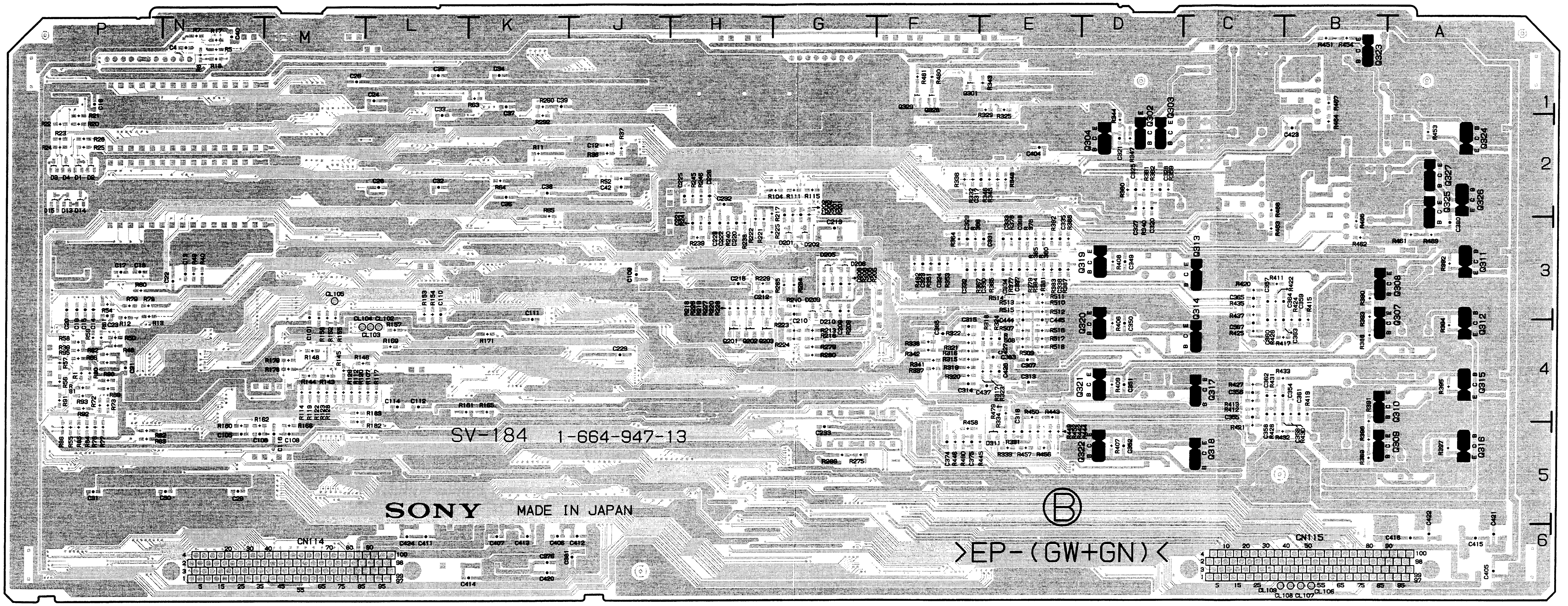

SV-184 -B SIDE-

SUFFIX : -13

MODEL DSR-80/80P/60/60P

ͽNY-SP0754 / DRUCK 103

SV-184: SERVO SYSTEM

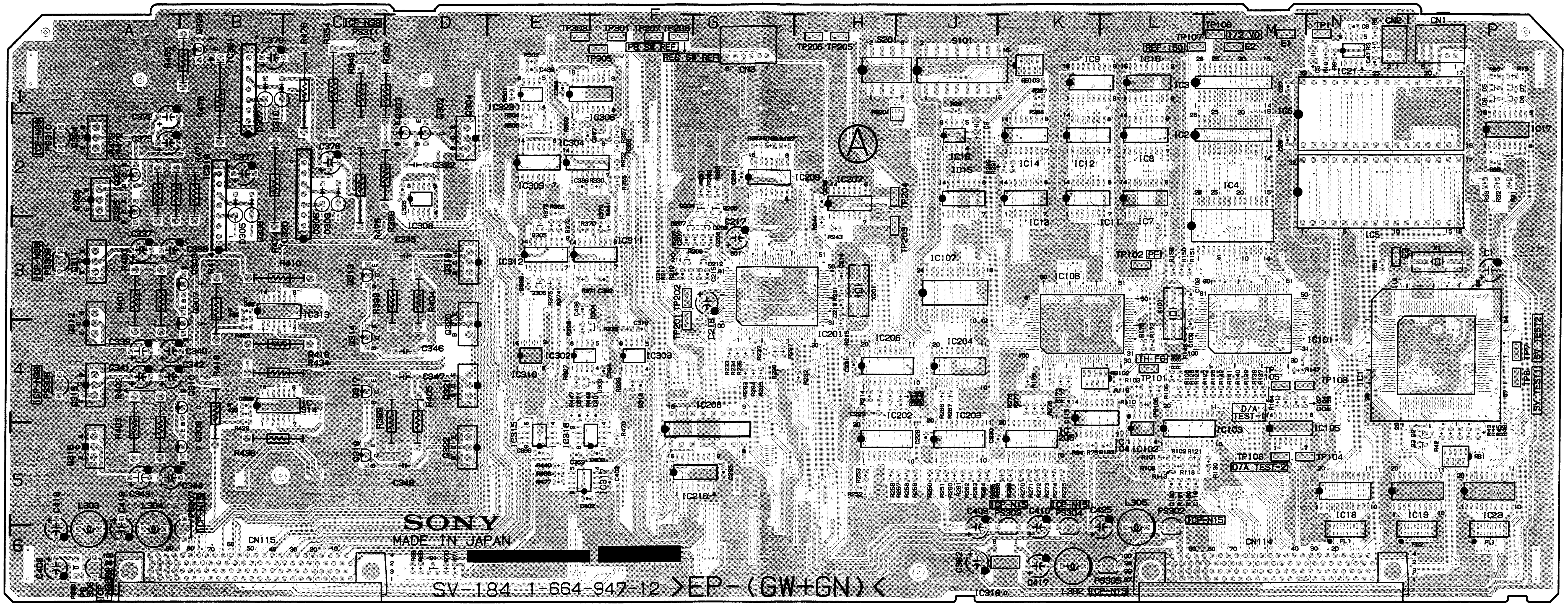

SV-184 -A SIDE-
SUFFIX : -12
MODEL DSR-60/60P

SV-184 (1-664-947-12)

*: B SIDE

CN1	P1	D212	G3	IC6	M2	IC204	J4	L302	K6	Q303	D2	Q329	* F1	TP206	H1
CN2	N1	D303	F4	IC7	L2	IC205	K5	L303	A6	Q304	D2			TP207	F1
CN3	G1	D304	F4	IC8	L2	IC206	H4	L304	A6	Q305	E3	RB1	P5	TP208	F1
CN114	N6	D305	B2	IC9	K1	IC207	H2	L305	L6	Q306	E3	RB102	K4	TP301	F1
CN115	C6	D306	C2	IC10	L1	IC208	F5			Q307	B4	RB103	K1	TP303	E1
		D307	B1	IC11	K2	IC209	G2	PS302	L6	Q308	B3	RB201	J2	TP305	F1
D1	* P2	D308	B2	IC12	K2	IC210	G5	PS303	K6	Q309	B5				
D2	* P2	D309	C2	IC13	K2	IC302	E4	PS304	K6	Q310	B4	S101	J1	X1	P3
D3	* P2	D310	B1	IC14	K2	IC303	F4	PS305	L6	Q311	A3	S201	H1	X101	L3
D4	* P2	D311	* E5	IC15	J2	IC304	E2	PS306	A6	Q312	A4			X201	H3
D5	P1			IC16	J2	IC306	F1	PS307	B6	Q313	C3	TP1	N1		
D6	P1	E1	M1	IC17	P2	IC308	D2	PS308	A4	Q314	C4	TP6	P4		
D7	P1	E2	M1	IC18	N5	IC309	E2	PS309	A3	Q315	A4	TP7	P4		
D8	P1	E3	N3	IC19	P5	IC310	E4	PS310	A2	Q316	A5	TP101	L4		
D13	* P2			IC21	N1	IC311	F3	PS311	C1	Q317	C4	TP102	L3		
D14	* P2	FB301	A6	IC23	P5	IC312	E3			Q318	C5	TP103	M4		
D15	* P2			IC101	M4	IC313	B3	Q1	D6	Q319	D3	TP104	M5		
D201	* G3	FL1	N6	IC102	L5	IC314	B4	Q2	P5	Q320	D4	TP105	M4		
D202	* G3	FL2	P6	IC103	L5	IC315	E5	Q3	P5	Q321	D4	TP106	M1		
D205	* G3	FL3	P6	IC104	K4	IC316	F5	Q201	* H4	Q322	D5	TP107	L1		
D206	* G3			IC105	M5	IC317	E5	Q202	* H4	Q323	B1	TP108	M5		
D207	F3	IC1	P4	IC106	K4	IC318	K6	Q203	* H4	Q324	A2	TP201	F4		
D208	G3	IC2	M2	IC107	J3	IC319	B3	Q204	G2	Q325	A2	TP202	F3		
D209	* G3	IC3	M1	IC201	G3	IC320	C3	Q205	G2	Q326	A2	TP203	H3		
D210	* G3	IC4	M3	IC202	H5	IC321	B2	Q301	* F1	Q327	A2	TP204	H2		
D211	F3	IC5	M3	IC203	J5	IC323	E1	Q302	D2	Q328	* F1	TP205	H1		

DSR-60/60P

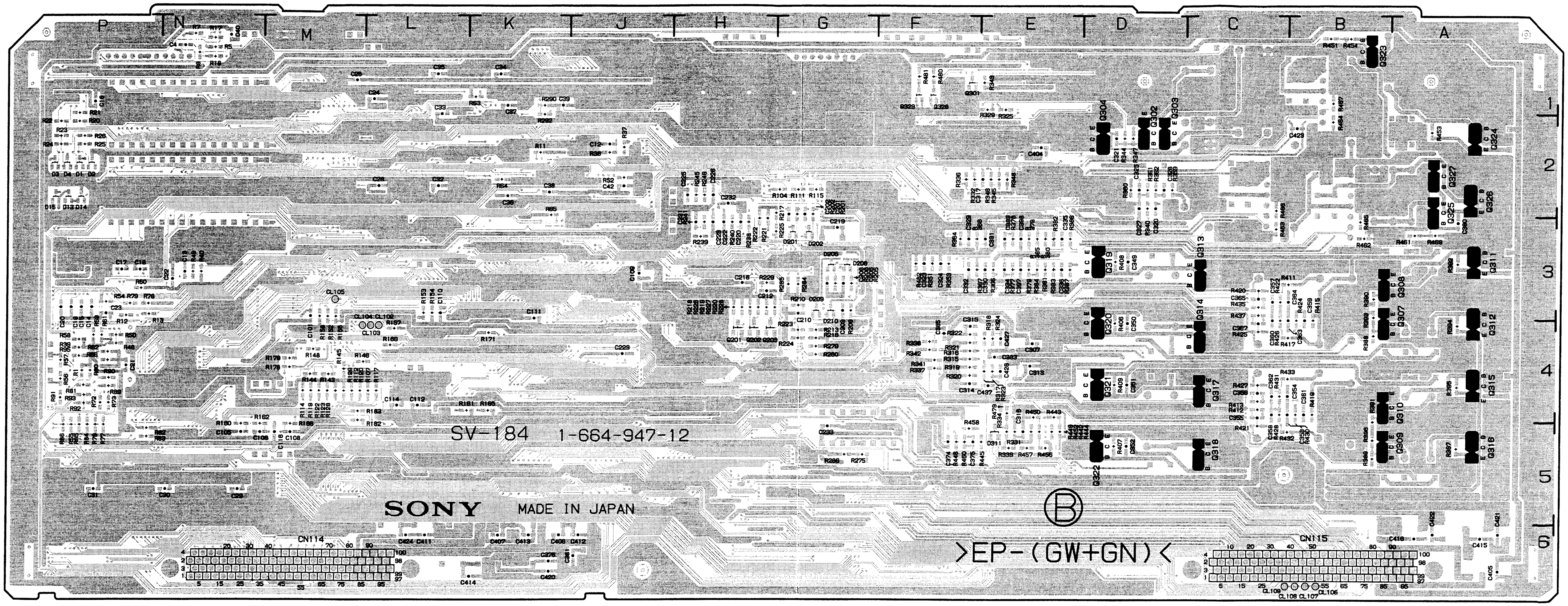

SV-184 -B SIDE-
SUFFIX : -12
MODEL DSR-60/60P

DSR-60/60P

SV-184: SERVO SYSTEM

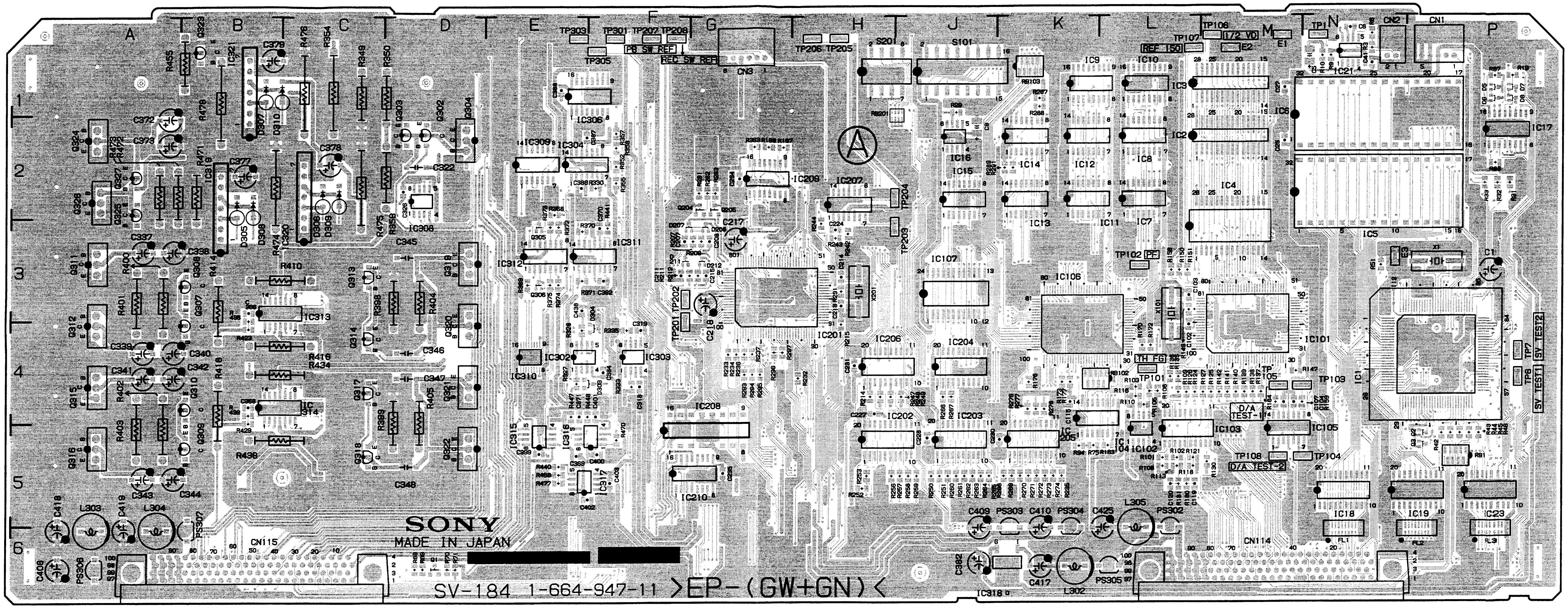

SV-184 -A SIDE-
SUFFIX : -11
MODEL DSR-60/60P

SV-184 (1-664-947-11)

*: B SIDE

CN1	P1	D303	F4	IC10	L1	IC209	G2	PS303	K6	Q314	C4	TP7	P4
CN2	N1	D304	F4	IC11	K2	IC210	G5	PS304	K6	Q315	A4	TP101	L4
CN3	G1	D305	B2	IC12	K2	IC302	E4	PS305	L6	Q316	A5	TP102	L3
CN114	N6	D306	C2	IC13	K2	IC303	F4	PS306	A6	Q317	C4	TP103	M4
CN115	C6	D307	B1	IC14	K2	IC304	E2	PS307	B6	Q318	C5	TP104	M5
		D308	B2	IC15	J2	IC306	F1			Q319	D3	TP105	M4
D1	* P2	D309	C2	IC16	J2	IC308	D2	Q1	D6	Q320	D4	TP106	M1
D2	* P2	D310	B1	IC17	P2	IC309	E2	Q2	P5	Q321	D4	TP107	L1
D3	* P2	D311	* E5	IC18	N5	IC310	E4	Q3	P5	Q322	D5	TP108	M5
D4	* P2			IC19	P5	IC311	F3	Q201	* H4	Q323	B1	TP201	F4
D5	P1	E1	M1	IC21	N1	IC312	E3	Q202	* H4	Q324	A2	TP202	F3
D6	P1	E2	M1	IC23	P5	IC313	B3	Q203	* H4	Q325	A2	TP203	H3
D7	P1	E3	N3	IC101	M4	IC314	B4	Q204	G2	Q326	A2	TP204	H2
D8	P1			IC102	L5	IC315	E5	Q205	G2	Q327	A2	TP205	H1
D13	* P2	FL1	N6	IC103	L5	IC316	F5	Q301	* F1	Q328	* F1	TP206	H1
D14	* P2	FL2	P6	IC104	K4	IC317	E5	Q302	D2	Q329	* F1	TP207	F1
D15	* P2	FL3	P6	IC105	M5	IC318	K6	Q303	D2			TP208	F1
D201	* G3			IC106	K4	IC319	B3	Q304	D2	RB1	P5	TP301	F1
D202	* G3	IC1	P4	IC107	J3	IC320	C3	Q305	E3	RB102	K4	TP303	E1
D205	* G3	IC2	M2	IC201	G3	IC321	B2	Q306	E3	RB103	K1	TP305	F1
D206	* G3	IC3	M1	IC202	H5			Q307	B4	RB201	J2		
D207	F3	IC4	M3	IC203	J5	L302	K6	Q308	B3			X1	P3
D208	G3	IC5	M3	IC204	J4	L303	A6	Q309	B5	S101	J1	X101	L3
D209	* G3	IC6	M2	IC205	K5	L304	A6	Q310	B4	S201	H1	X201	H3
D210	* G3	IC7	L2	IC206	H4	L305	L6	Q311	A3				
D211	F3	IC8	L2	IC207	H2			Q312	A4	TP1	N1		
D212	G3	IC9	K1	IC208	F5	PS302	L6	Q313	C3	TP6	P4		

DSR-60/60P

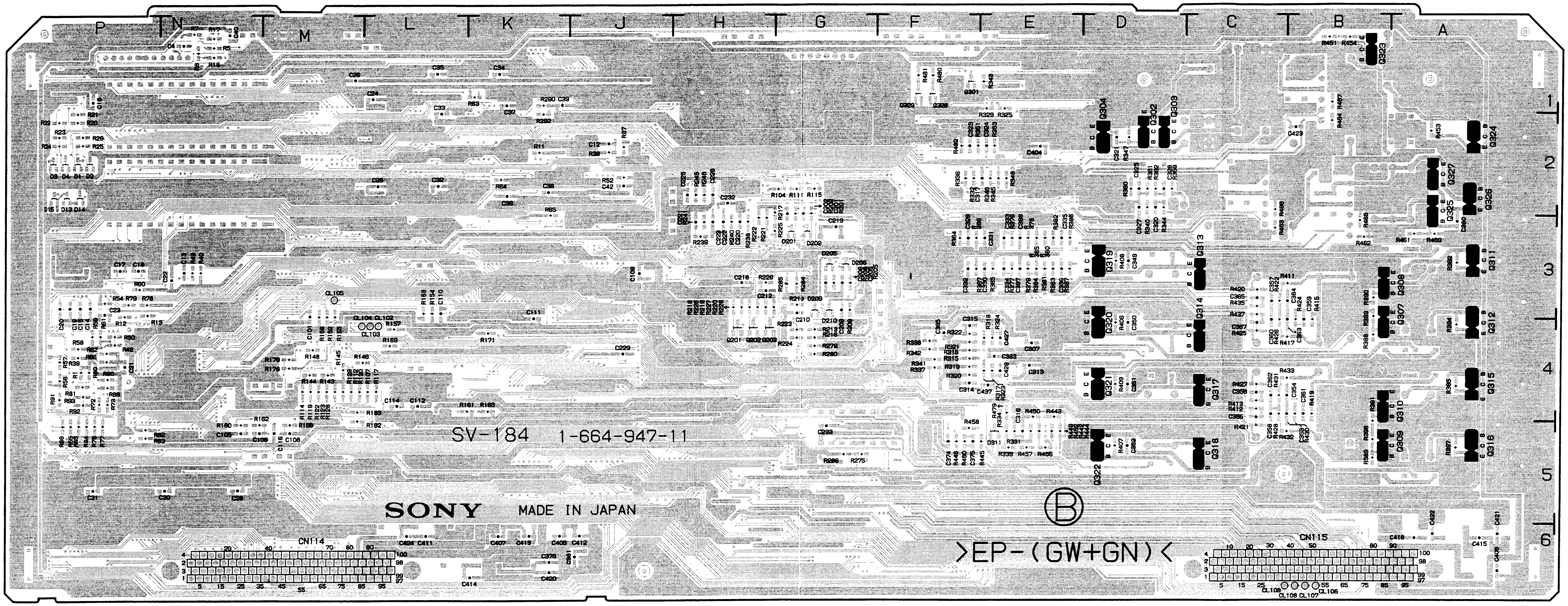

SV-184 -B SIDE-

SUFFIX : -11

MODEL DSR-60/60P

SY-241/241B: SYSTEM CONTROL

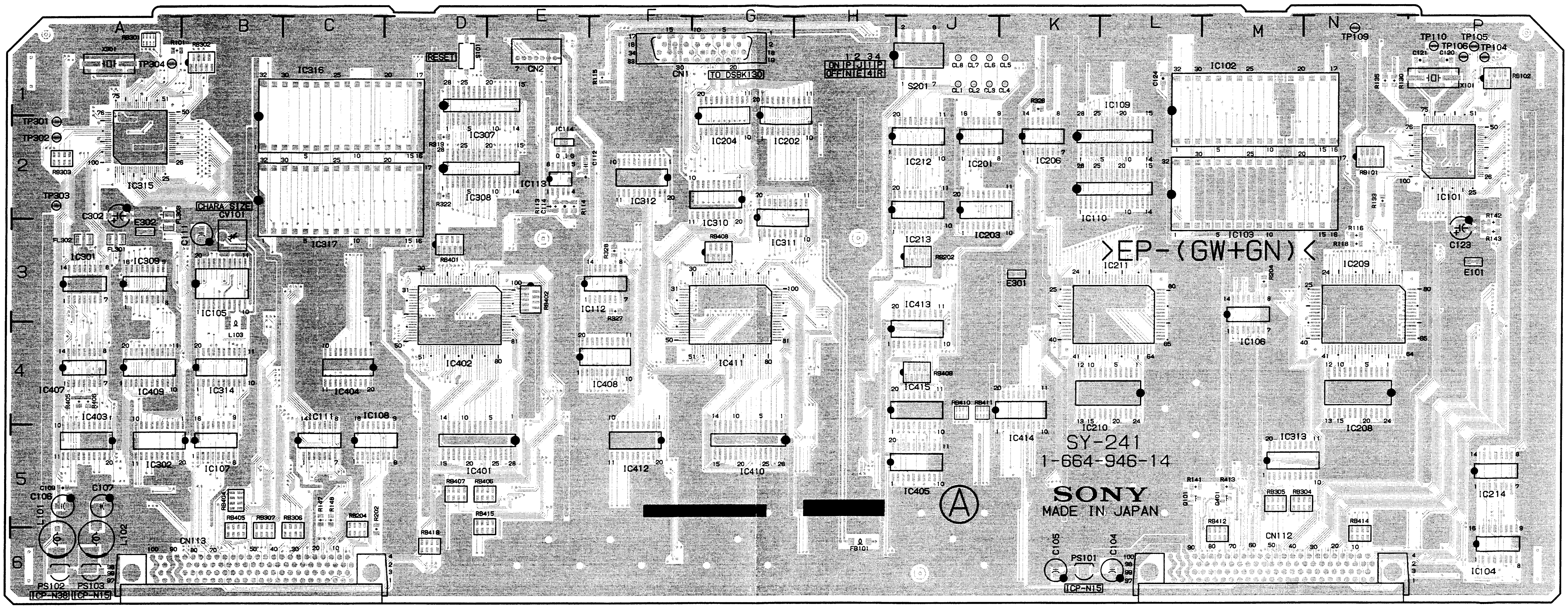

SY-241/241B -A SIDE-

SUFFIX : -14

MODEL DSR-80/80P/60/60P

SY-241/241B (1-664-946-14)

*: B SIDE

CNI102	L2	IC107	B5	IC312	F2	PS103	A6	RB413	D6
CNI103	L3	IC108	C5	IC313	M5			RB414	N6
CNI316	B2	IC109	L2	IC314	B4	Q101	L5	RB415	E5 (#1)
CNI317	B3	IC110	L2	IC315	A2	Q401	M5		
		IC111	C5	IC316	B2			S101	D1
CN1	G1	IC112	F3	IC317	B3	RB101	N2	S201	J1
CN2	E1	IC113	E2	IC401	D5 (#1)	RB102	P1		
CN112	N6	IC114	E2	IC402	D3 (#1)	RB202	J3	X101	P1
CN113	C6	IC201	J2	IC403	A5	RB204	C6	X301	A1
		IC202	G2	IC404	C4 (#1)	RB301	A1		
CV101	B3	IC203	J2	IC405	J5 (#1)	RB302	B1		
		IC204	G2	IC407	A4 (#2)	RB303	A2		
E101	P3	IC206	K2	IC408	F4 (#2)	RB304	N5		
E301	K3	IC208	N4	IC409	A4 (#2)	RB305	M5		
E302	A3	IC209	N3	IC410	G5 (#1)	RB306	C6		
		IC210	L4	IC411	G3 (#1)	RB307	B6		
FB101	H6	IC211	L3	IC412	F5 (#1)	RB401	D3 (#1)		
FL301	A3 (#1)	IC212	J2	IC413	J4 (#2)	RB402	E3		
FL302	A3	IC213	J2	IC414	K4	RB404	B5 (#1)		
FL303	A3	IC214	P5	IC415	J4 (#2)	RB405	B6 (#1)		
		IC301	A3			RB406	E5		
IC101	P2	IC302	A5 (#1)	L101	A6	RB407	D5		
IC102	L2	IC307	D1	L102	A6	RB408	G3 (#1)		
IC103	L3	IC308	D2	L103	B4	RB409	J4 (#2)		
IC104	P6	IC309	A3			RB410	J4		
IC105	B3	IC310	G2	PS101	K6	RB411	J4		
IC106	M3	IC311	G3	PS102	A6	RB412	M6 (#1)		

#1: SY-241
#2: SY-241B

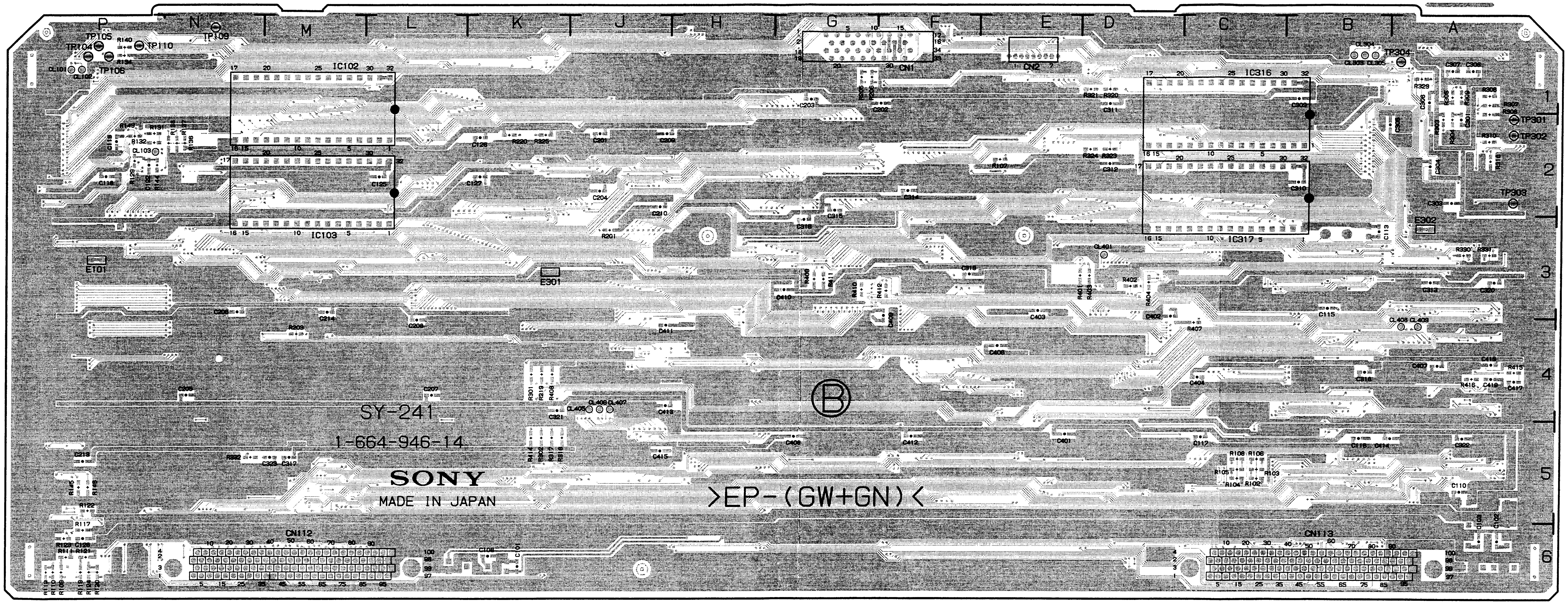

SY-241/241B -B SIDE-

SUFFIX : -14

MODEL DSR-80/80P/60/60P

ONY-SP0754 / DRUCK 109

SY-241/241B: SYSTEM CONTROL

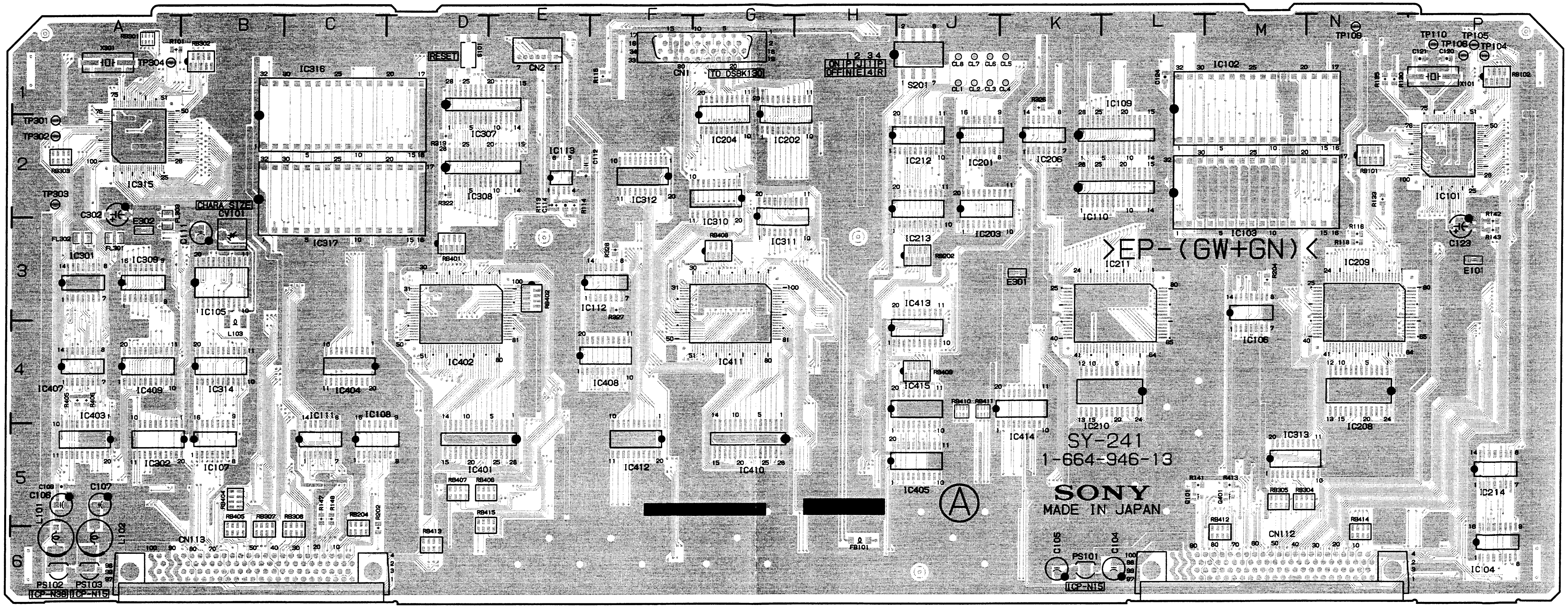

SY-241/241B -A SIDE-

SUFFIX : -13
MODEL DSR-80/80P/60/60P

SY-241/241B (1-664-946-13)

*: B SIDE

CNI101	P2(#2)	IC105	B3	IC311	G3	PS102	A6	RB412	M6(#1)
CNI102	L2	IC106	M3	IC312	F2	PS103	A6	RB413	D6
CNI103	L3	IC107	B5	IC313	M5			RB414	N6
CNI315	A2(#2)	IC108	C5	IC314	B4	Q101	L5	RB415	E5(#1)
CNI316	B2	IC109	L2	IC315	A2	Q401	M5		
CNI317	B3	IC110	L2	IC316	B2			S101	D1
CN1	G1	IC111	C5	IC317	B3	RB101	N2	S201	J1
CN2	E1	IC112	F3	IC401	D5(#1)	RB102	P1		
CN112	N6	IC113	E2	IC402	D3(#1)	RB202	J3	TP104	P1
CN113	C6	IC201	J2	IC403	A5	RB204	C6	TP105	P1
		IC202	G2	IC404	C4(#1)	RB301	A1	TP106	P1
CV101	B3	IC203	J2	IC405	J5(#1)	RB302	B1	TP109	N1
		IC204	G2	IC407	A4(#2)	RB303	A2	TP110	P1
E101	P3	IC206	K2	IC408	F4(#2)	RB304	N5	TP301	A2
E301	K3	IC208	N4	IC409	A4(#2)	RB305	M5	TP302	A2
E302	A3	IC209	N3	IC410	G5(#1)	RB306	C6	TP303	A2
		IC210	L4	IC411	G3(#1)	RB307	B6	TP304	A1
FB101	H6	IC211	L3	IC412	F5(#1)	RB401	D3(#1)		
		IC212	J2	IC413	J4(#2)	RB402	E3	X101	P1
FL301	A3(#1)	IC213	J2	IC414	K4	RB404	B5(#1)	X301	A1
FL302	A3	IC214	P5	IC415	J4(#2)	RB405	B6(#1)		
FL303	A3	IC301	A3			RB406	E5		
		IC302	A5(#1)	L101	A6	RB407	D5		
IC101	P2	IC307	D1	L102	A6	RB408	G3(#1)		
IC102	L2	IC308	D2	L103	B4	RB409	J4(#2)		
IC103	L3	IC309	A3			RB410	J4		
IC104	P6	IC310	G2	PS101	K6	RB411	J4		

#1: SY-241
#2: SY-241B

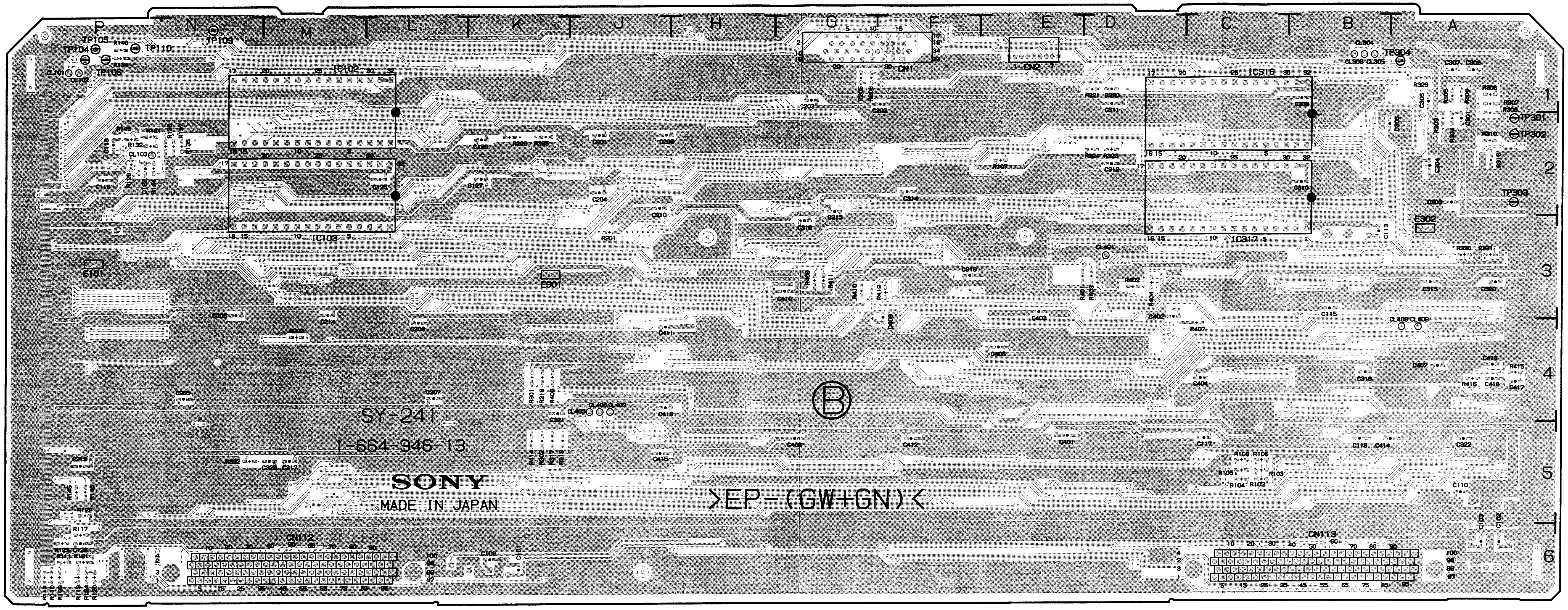

SY-241/241B -B SIDE-
SUFFIX : -13
MODEL DSR-80/80P/60/60P

SY-241B: SYSTEM CONTROL

DSR-60/60P

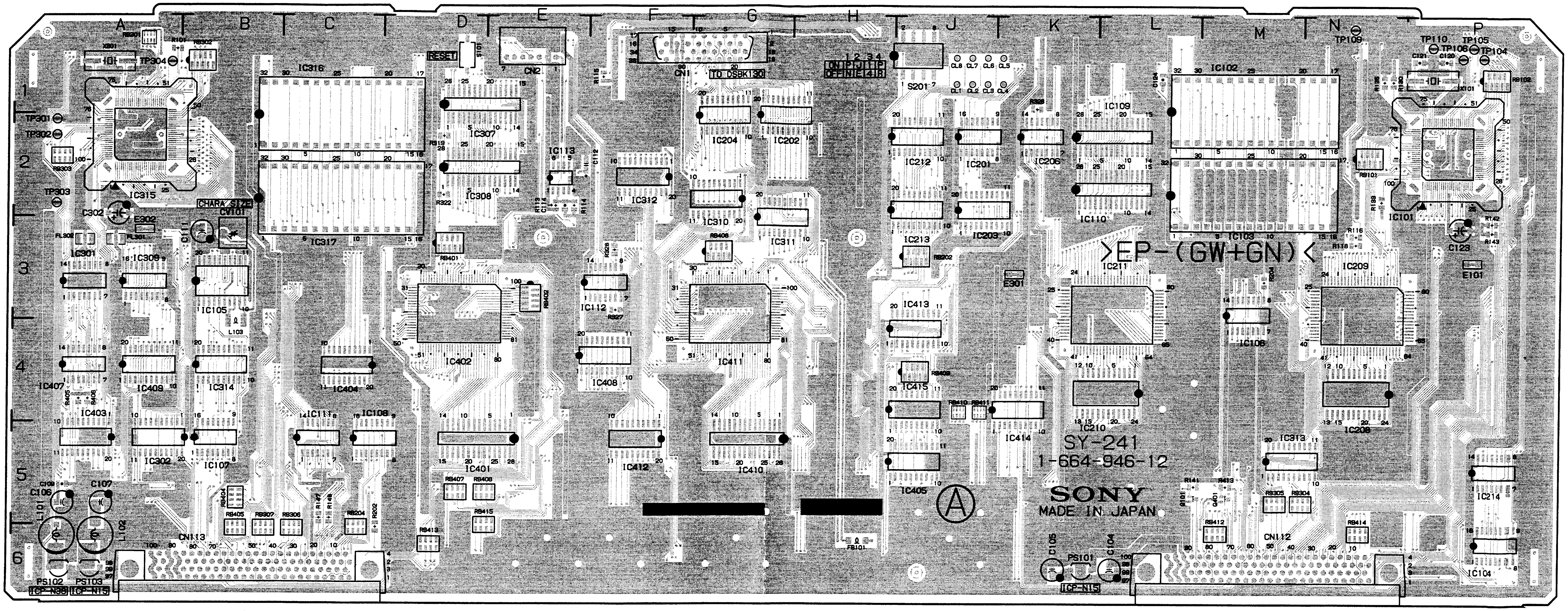

SY-241B -A SIDE-

SUFFIX : -12

MODEL DSR-60/6OP

SY-241B (1-664-946-12)

*: B SIDE

CNI101	P2
CNI102	L2
CNI103	L3
CNI315	A2
CNI316	B2
CNI317	B3
CN1	G1
CN2	E1
CN112	N6
CN113	C6
CV101	B3
E101	P3
E301	K3
E302	A3
FB101	H6
FL302	A3
IC101	P2
IC102	L2
IC103	L3
IC104	P6
IC105	B3
IC106	M3
IC107	B5
IC108	C5
IC109	L2
IC110	L2
IC111	C5
IC112	F3
IC113	E2
IC201	J2
IC202	G2
IC203	J2
IC204	G2
IC206	K2
IC208	N4
IC209	N3
IC210	L4
IC211	L3
IC212	J2
IC213	J2
IC214	P5
IC301	A3
IC307	D1
IC308	D2
IC309	A3
IC310	G2
IC311	G3
IC312	F2
IC313	M5
IC314	B4
IC315	A2
IC316	B2
IC317	B3
IC403	A5
IC407	A4
IC408	F4
IC409	A4
IC413	J4
IC414	K4
IC415	J4
L101	A6
L102	A6
L103	B4
PS101	K6
PS102	A6
PS103	A6
Q101	L5
Q401	M5
RB101	N2
RB102	P1
RB202	J3
RB204	C6
RB301	A1
RB302	B1
RB303	A2
RB304	N5
RB305	M5
RB306	C6
RB307	B6
RB402	E3
RB406	E5
RB407	D5
RB409	J4
RB410	J4
RB411	J4
RB413	D6
RB414	N6
S101	D1
S201	J1
TP104	P1
TP105	P1
TP106	P1
TP109	N1
TP110	P1
TP301	A2
TP302	A2
TP303	A2
TP304	A1
X101	P1
X301	A1

DSR-60/60P

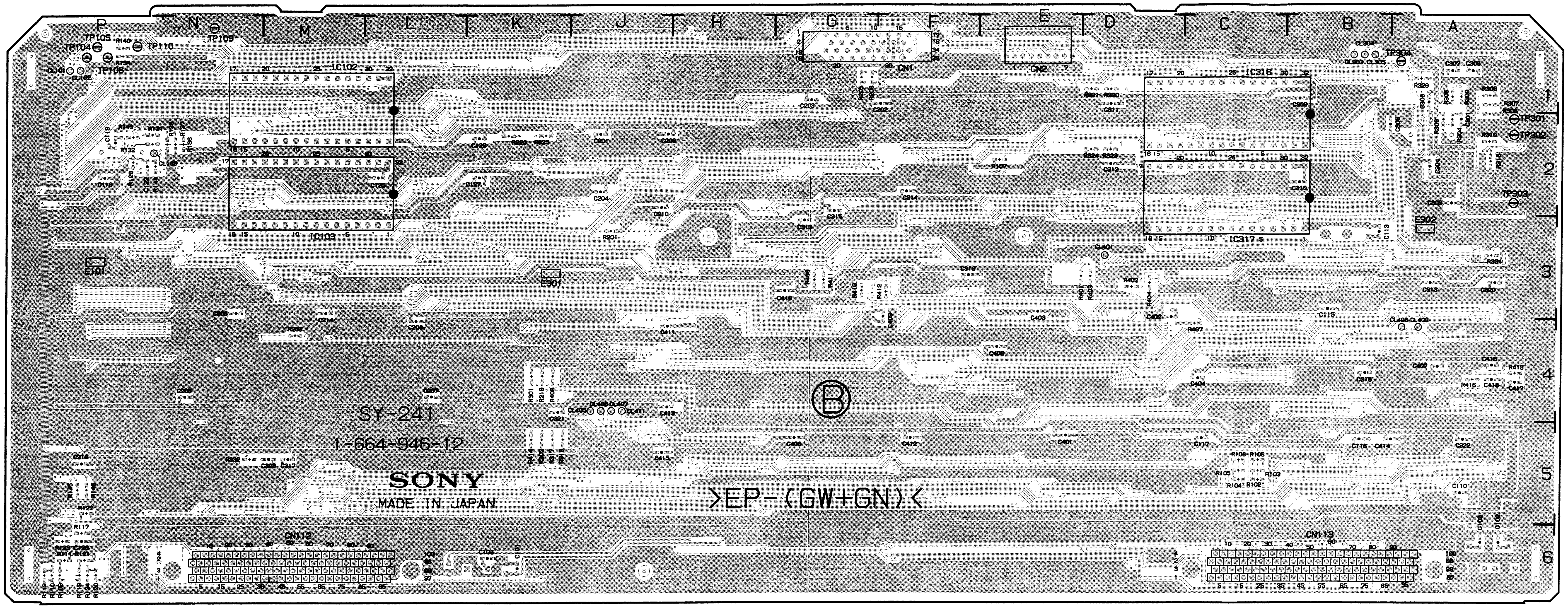

SY-241B -B SIDE-
SUFFIX : -12
MODEL DSR-60/60P

 DSR-60/60P

SY-241B: SYSTEM CONTROL

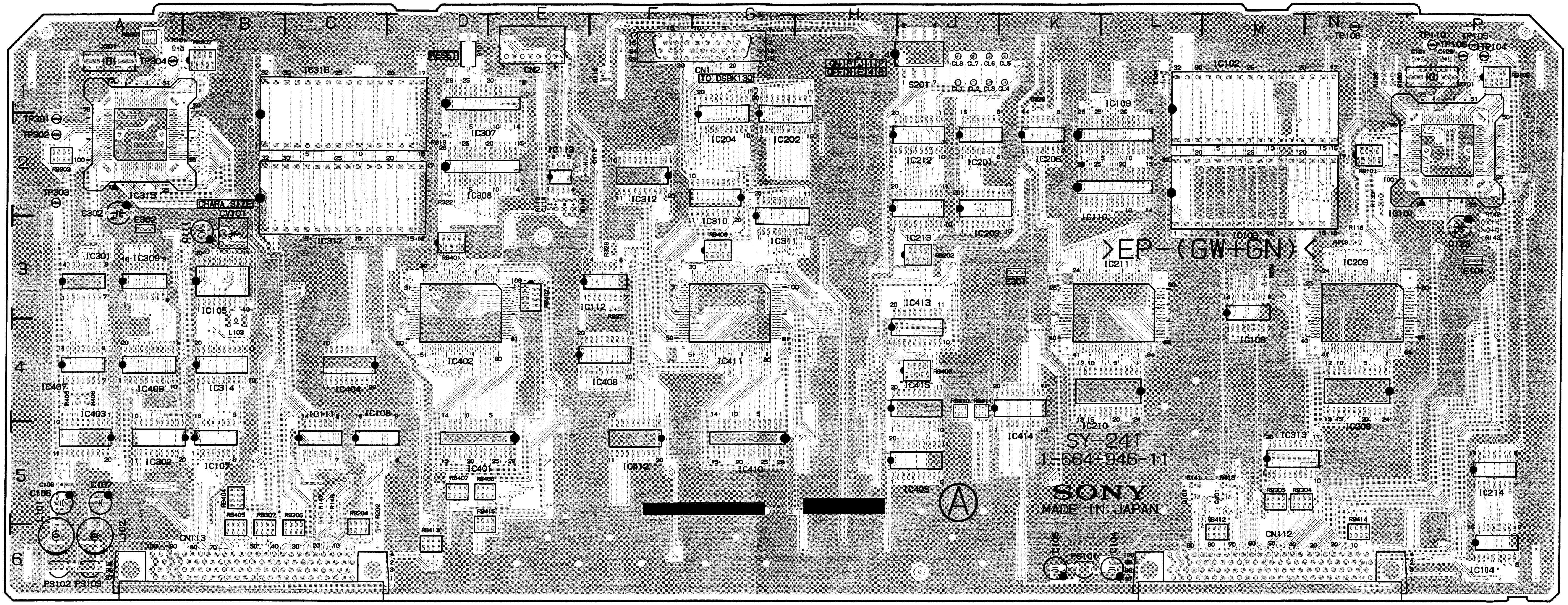

SY-241B -A SIDE-
SUFFIX : -11
MODEL DSR-60/60P

SY-241B (1-664-946-11)

*: B SIDE

CNI101	P2	IC109	L2	IC315	A2	RB301	A1	TP302	A2
CNI102	L2	IC110	L2	IC316	B2	RB302	B1	TP303	A2
CNI103	L3	IC111	C5	IC317	B3	RB303	A2	TP304	A1
CNI315	A2	IC112	F3	IC403	A5	RB304	N5		
CNI316	B2	IC113	E2	IC407	A4	RB305	M5	X101	P1
CNI317	B3	IC201	J2	IC408	F4	RB306	C6	X301	A1
		IC202	G2	IC409	A4	RB307	B6		
CN1	G1	IC203	J2	IC413	J4	RB402	E3		
CN2	E1	IC204	G2	IC414	K4	RB406	E5		
CN112	N6	IC206	K2	IC415	J4	RB407	D5		
CN113	C6	IC208	N4			RB409	J4		
		IC209	N3	L101	A6	RB410	J4		
CV101	B3	IC210	L4	L102	A6	RB411	J4		
		IC211	L3	L103	B4	RB413	D6		
E101	P3	IC212	J2			RB414	N6		
E301	K3	IC213	J2	PS101	K6	RB415	E5		
E302	A3	IC214	P5	PS102	A6				
		IC301	A3	PS103	A6	S101	D1		
IC101	P2	IC307	D1			S201	J1		
IC102	L2	IC308	D2	Q101	L5				
IC103	L3	IC309	A3	Q401	M5	TP104	P1		
IC104	P6	IC310	G2			TP105	P1		
IC105	B3	IC311	G3	RB101	N2	TP106	P1		
IC106	M3	IC312	F2	RB102	P1	TP109	N1		
IC107	B5	IC313	M5	RB202	J3	TP110	P1		
IC108	C5	IC314	B4	RB204	C6	TP301	A2		

 DSR-60/60P

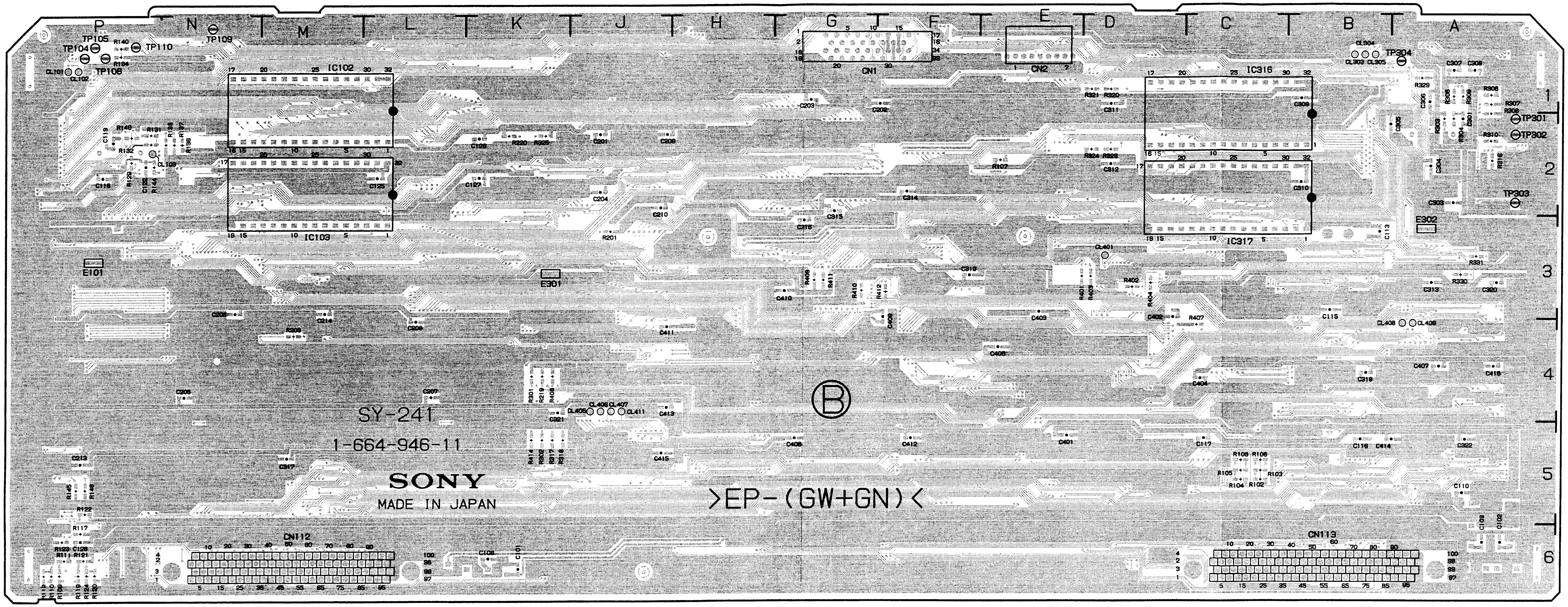

SY-241B -B SIDE-
SUFFIX : -11
MODEL DSR-60/60P

TC-90: EXT TC INPUT/OUTPUT
TR-93: TENSION SENSOR

TC-90 (1-662-907-11)

*: B SIDE

CN1	B1
D100	* A2
D101	* B3
D102	* B3
D103	* B2
D104	* B2
D105	* A3
IC100	B1
IC101	B3
IC102	B2
IC103	A3
IC104	C2
IC105	B3
IC106	B3
IC107	B2
Q100	* B3
Q101	* B3
Q102	* A3
Q103	* A3
X100	B4

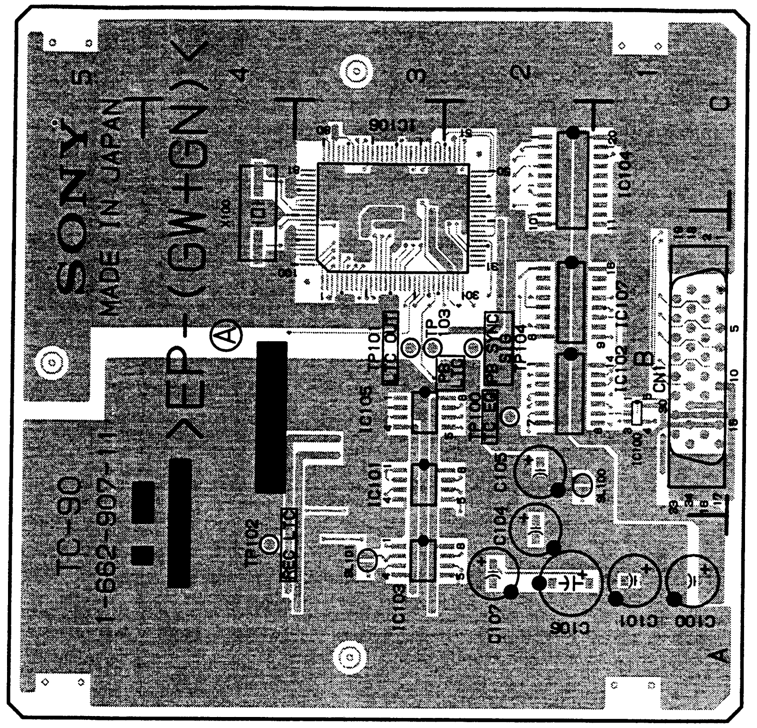

TC-90 -A SIDE-
SUFFIX : -11
MODEL DSBK-130/130P

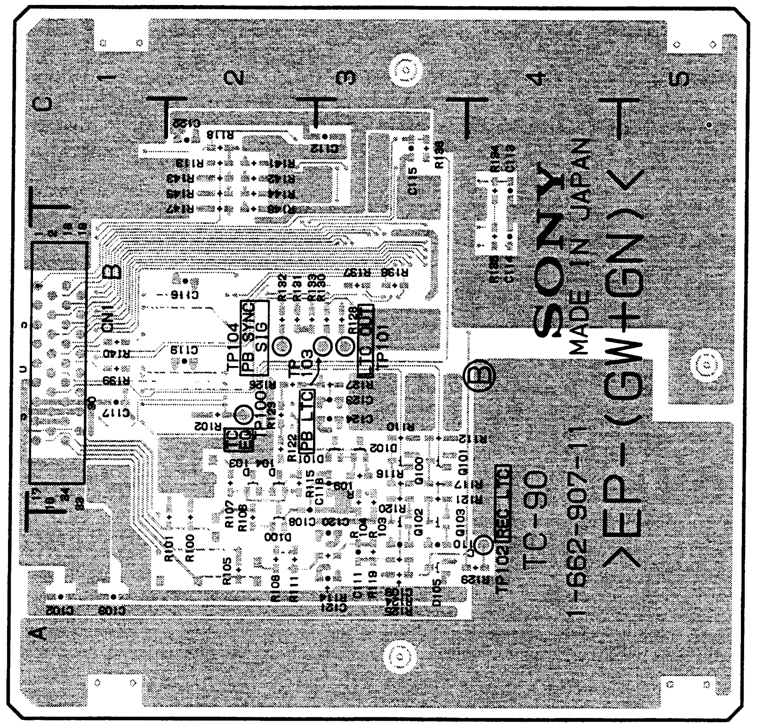

TC-90 -B SIDE-
SUFFIX : -11
MODEL DSBK-130/130P

TR-93 (1-662-913-11)

*: B SIDE

CN31	A1
DM230	A1

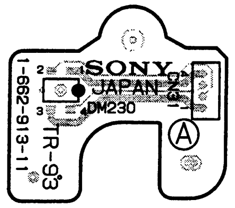

TR-93 -A SIDE-
SUFFIX : -11
MODEL DSR-80/80P/60/60P

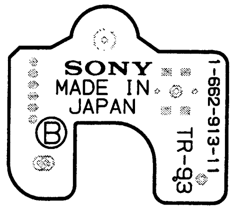

TR-93 -B SIDE-
SUFFIX : -11
MODEL DSR-80/80P/60/60P

SECTION 13
SCHEMATIC DIAGRAMS

DSR-60/60P

BOARD NAME	CIRCUIT FUNCTION	PAGE
CC-75	CASSETTE COMPARTMENT DOWN 1/2/3 SENSOR CC UP/DOWN MOTOR CONNECTION	13-169
CC-76	CASSETTE IN 1/2/3 SENSOR	13-169
CP-276B	ANALOG VIDEO IN/OUT, TC OUT, AUDIO MONITOR	13-3
CP-281B/281C	ANALOG AUDIO OUT	13-4
DV-17/17A	VIDEO DIGITAL OUT PROCESS, AUDIO ANALOG/DIGITAL OUT PROCESS	13-44
FP-75	SUB PANEL MENU KEY/AUDIO MONITOR SWITCH, SYNC/SC PHASE ADJUST	13-177
HP-73	HEADPHONE VOLUME/CONNECTOR, SIRCS CONNECTOR	13-177
IO-149B/149C	VIDEO ANALOG OUT PROCESS, REF SIGNAL GEN, VIDEO OUT DRIVER	13-62
KY-336B	KEY SWITCH, FL DISPLAY/DRIVE	13-80
MB-713	MOTHER BOARD, REMOTE CONNECTOR	13-158
MS-43	DRUM/CAPSTAN MOTOR DRIVE, CAPSTAN FG AMP, TAPE TOP/END SENSOR AMP, REEL POSITION SENSOR, SV DATA MEMORY	13-84
PRE-39	PB DIGITAL PROCESS	13-89
PTC-84	THREAD/UNTHREAD END SENSOR, PINCH SOL/CLEAN SOL/DEW CONNECTION	13-175
PTC-85	TAPE TOP SENSOR	13-175
PTC-86	TAPE END SENSOR, TENSION SENSOR CONNECTION	13-175
PTC-87	TAPE TOP/END LED	13-175
PTC-88	THREADING FG SENSOR, THREADING MOTOR CONNECTION	13-175
RM-159	S REEL MOTOR/BRAKE SOL/FG SENSOR CONNECTION	13-175
RM-160	T REEL MOTOR/BRAKE SOL/FG SENSOR CONNECTION	13-175
RP-103	PB HEAD AMP, RF A/D	13-104
SDI-26A (DSBK-110/110P)	QSDI OUTPUT INTERFACE	13-109
SDI-28 (DSBK-100/100P)	SDI OUTPUT INTERFACE	13-124
SE-315	S REEL FG SENSOR	13-175
SE-361	T REEL FG SENSOR	13-175
SV-184	SERVO MAIN CONTROL	13-127
SY-241B	SYSTEM CONTROL	13-136
TC-90 (DSBK-130/130P)	EXTERNAL TIME CODE OUT	13-145
TR-93	TEN-REG ARM POSITION SENSOR	13-175

DSR-80/80P

BOARD NAME	CIRCUIT FUNCTION	PAGE
CC-75	CASSETTE COMPARTMENT DOWN 1/2/3 SENSOR CC UP/DOWN MOTOR CONNECTION	13-179
CC-76	CASSETTE IN 1/2/3 SENSOR	13-179
CP-276A	ANALOG VIDEO IN/OUT, TC IN/OUT, AUDIO MONITOR	13-3
CP-281/281J	ANALOG AUDIO IN/OUT, AES/EBU IN/OUT, BAL → UNBAL, AUDIO IN LEVEL SELECT	13-4
DA-119	AUDIO ANALOG/DIGITAL IN/OUT PROCESS	13-6
DV-15/15A	VIDEO DIGITAL IN/OUT PROCESS	13-22
FP-75	SUB PANEL MENU KEY/AUDIO MONITOR SWITCH, SYNC/SC PHASE ADJUST	13-182
HP-73	HEADPHONE VOLUME/CONNECTOR, SIRCS CONNECTOR	13-182
IO-149/149A	VIDEO ANALOG IN/OUT PROCESS, REF SIGNAL GEN, VIDEO IN/OUT DRIVER	13-62
KY-336	KEY SWITCH, AUDIO REC VOLUME, FL DISPLAY/DRIVE	13-80
MB-712	MOTHER BOARD, REMOTE CONNECTOR	13-146
MS-43	DRUM/CAPSTAN MOTOR DRIVE, CAPSTAN FG AMP, TAPE TOP/END SENSOR AMP, REEL POSITION SENSOR, SV DATA MEMORY	13-84
PRE-34	REC/PB DIGITAL PROCESS	13-86
PTC-84	THREAD/UNTHREAD END SENSOR, PINCH SOL/CLEAN SOL/DEW CONNECTION	13-179
PTC-85	TAPE TOP SENSOR	13-179
PTC-86	TAPE END SENSOR, TENSION SENSOR CONNECTION	13-179
PTC-87	TAPE TOP/END LED	13-179
PTC-88	THREADING FG SENSOR, THREADING MOTOR CONNECTION	13-179
RM-159	S REEL MOTOR/BRAKE SOL/FG SENSOR CONNECTION	13-179
RM-160	T REEL MOTOR/BRAKE SOL/FG SENSOR CONNECTION	13-179
RP-101	REC/PB HEAD AMP, RF A/D	13-90
SDI-26	QSDI INPUT/OUTPUT INTERFACE	13-109
SDI-27 (DSBK-120/120P)	SDI INPUT INTERFACE	13-120
SDI-28 (DSBK-100/100P) (DSBK-120/120P)	SDI OUTPUT INTERFACE	13-124
SE-315	S REEL FG SENSOR	13-179
SE-361	T REEL FG SENSOR	13-179
SV-184	SERVO MAIN CONTROL	13-127
SY-241	SYSTEM CONTROL	13-136
TC-90 (DSBK-130/130P)	EXTERNAL TIME CODE IN/OUT	13-145
TR-93	TEN-REG ARM POSITION SENSOR	13-179

CP-276A/276B: VIDEO/TC CONNECTOR

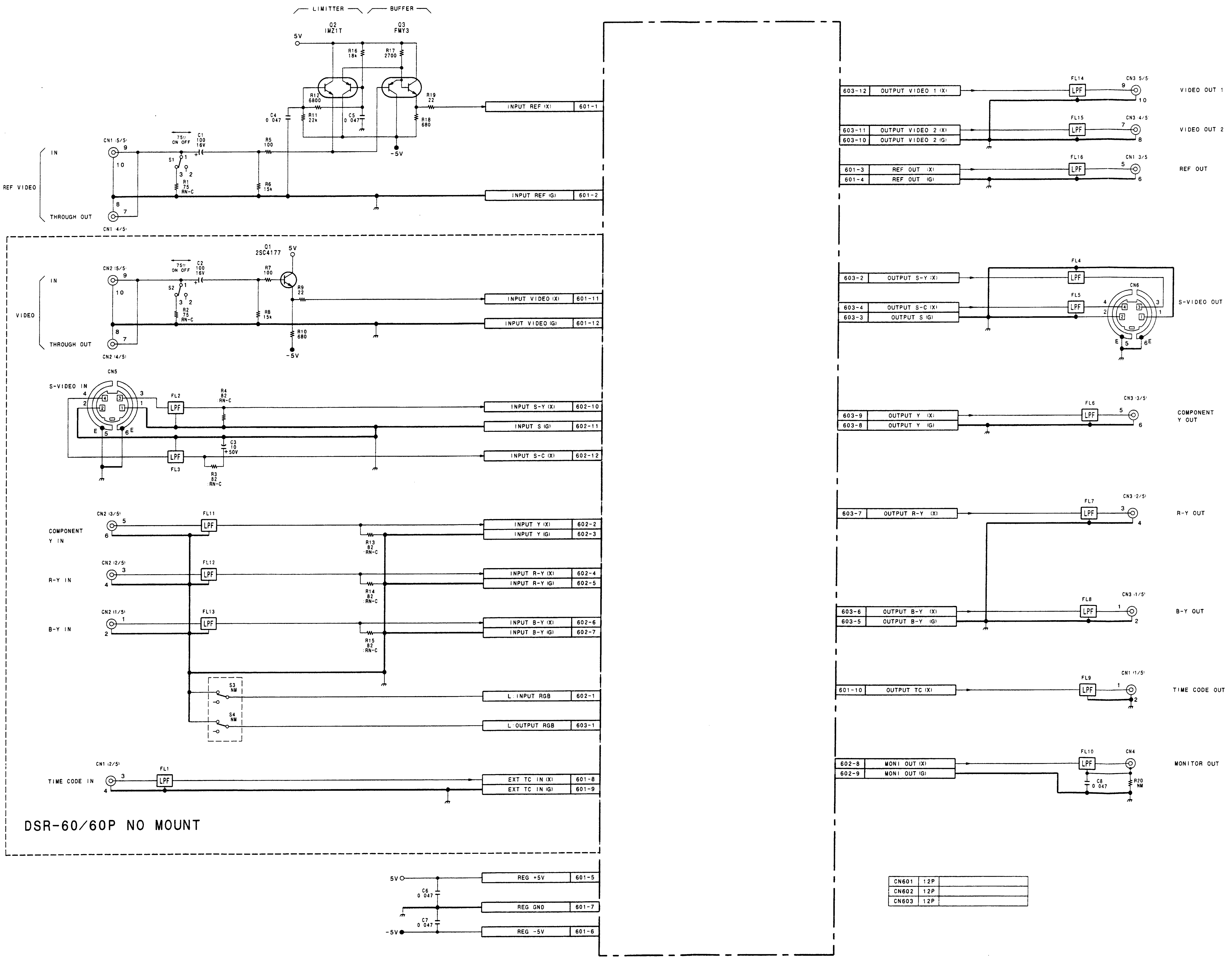

CN601	12P	
CN602	12P	
CN603	12P	

CP-276A/276B
MODEL DSR-80/80P/60/60P

CP-281/281B/281C/281J

CP-281B/281C: ANALOG AUDIO OUT (DSR-60/60P)
CP-281/281J: ANALOG AUDIO IN/OUT (DSR-80/80P)

1

2

3

4

5

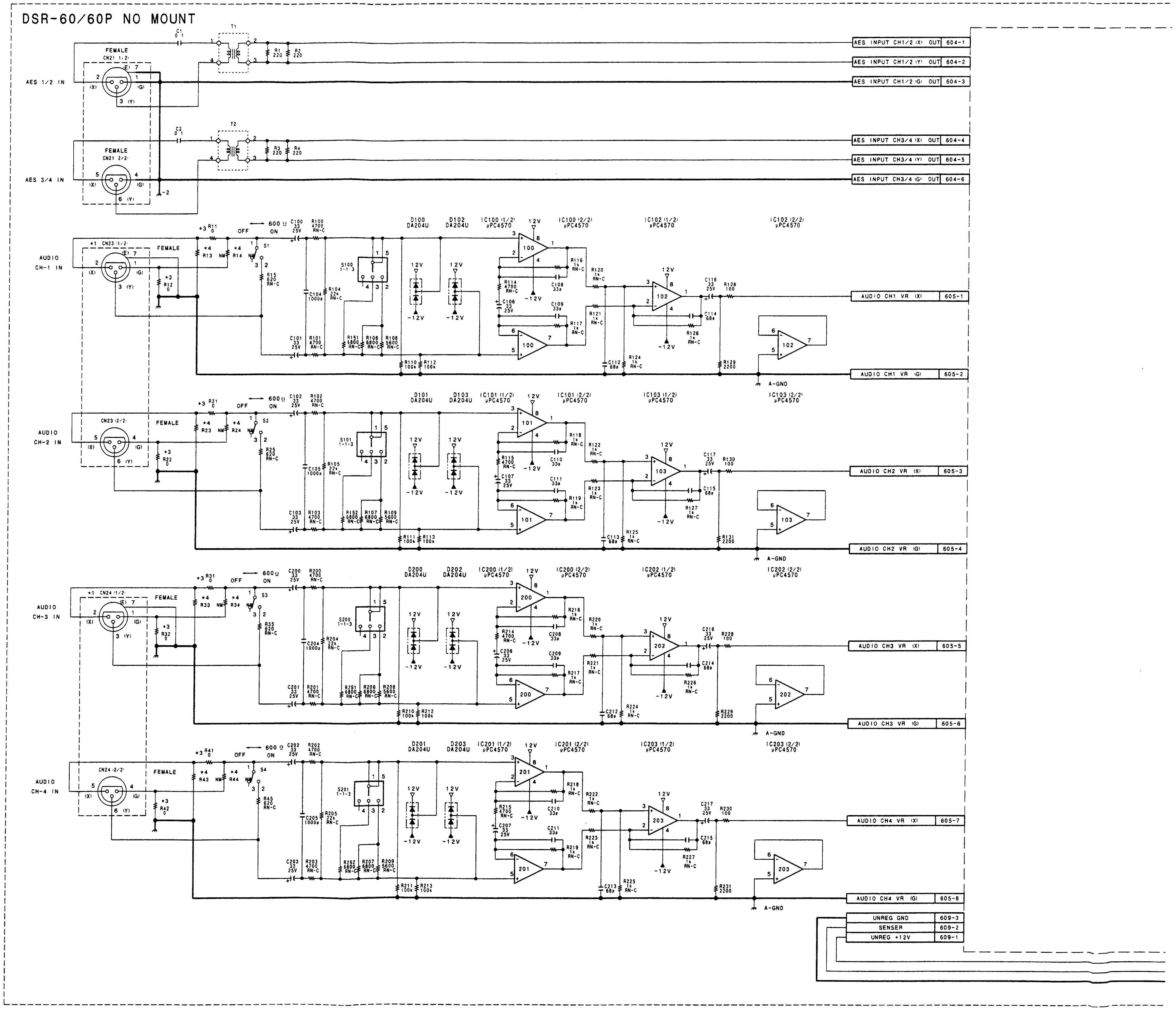

A | B | C | D | E | F | G | H

SONY-SP0754 / DRUCK 120

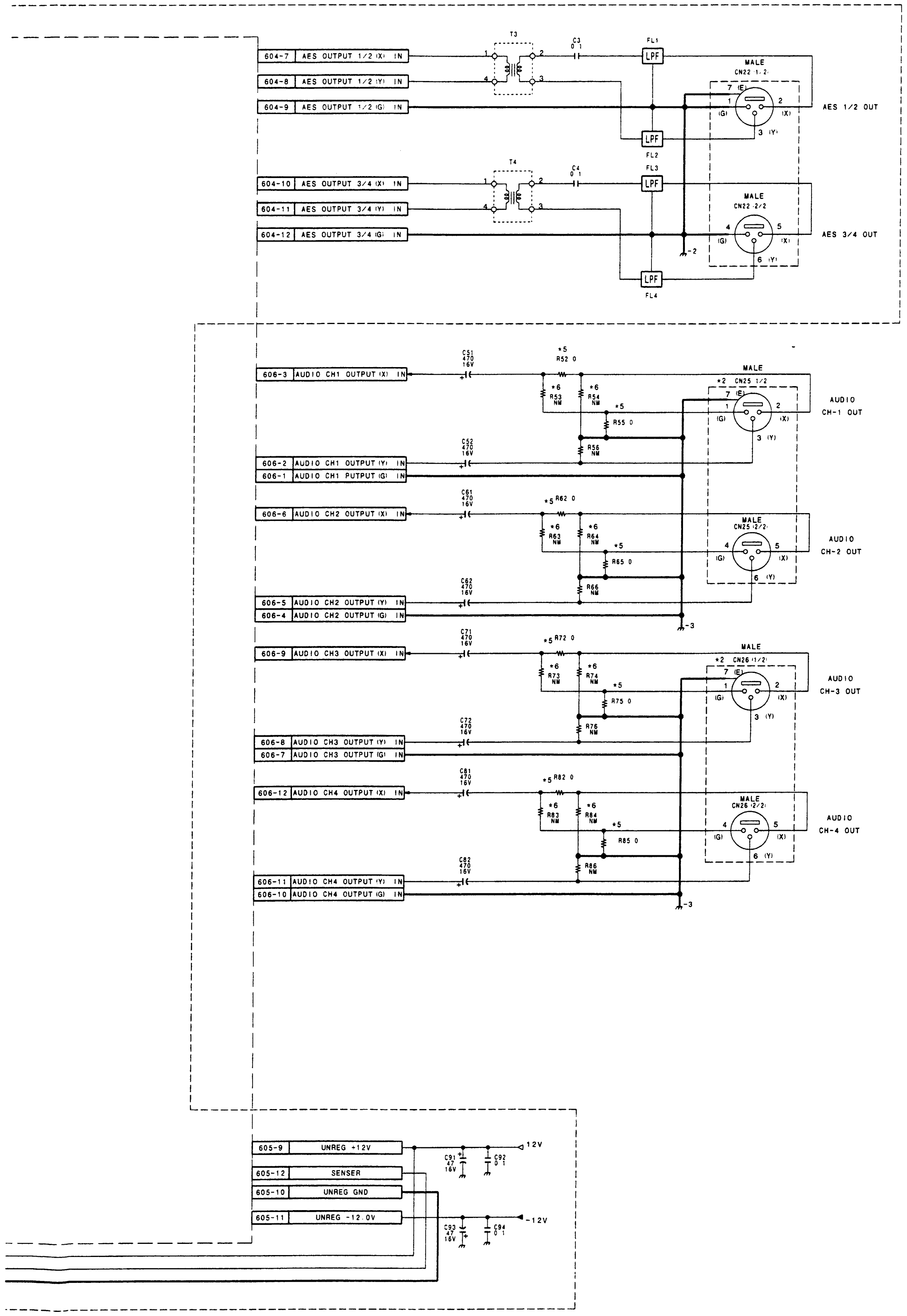

	REF No	UC. CE	J
*1	CN23. 24	FEMALE	MALE
*2	CN25. 26	MALE	FEMALE
*3	R11 21 31 41 R12. 22. 32. 42	0	N M
*4	R13 23 33 43 R14. 24. 34. 44	N M	0
*5	R52 62 72 82 R55. 65. 75. 85	0	N M
*6	R53 63 73 83 R54. 64. 74. 84	N M	0

1 — 2 — 3 — 4 — 5

CP-281/281B/281C/281J

MODEL DSR-80/80P/60/60P

DSR-80/80P

DA-119 (1/8): AUDIO ANALOG/DIGITAL IN/OUT PROCESS

1

DA-119 (1/8)

① TP101~TP-104 Reference Level Input

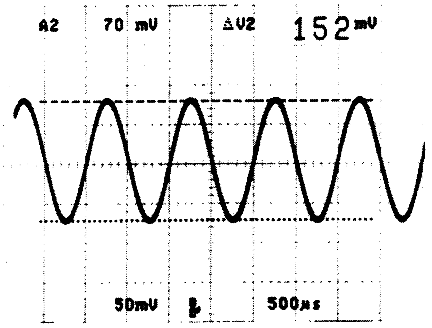

2

① TP101~104 Reference Level Input

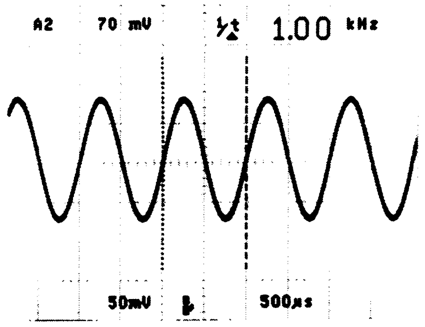

3

4

5

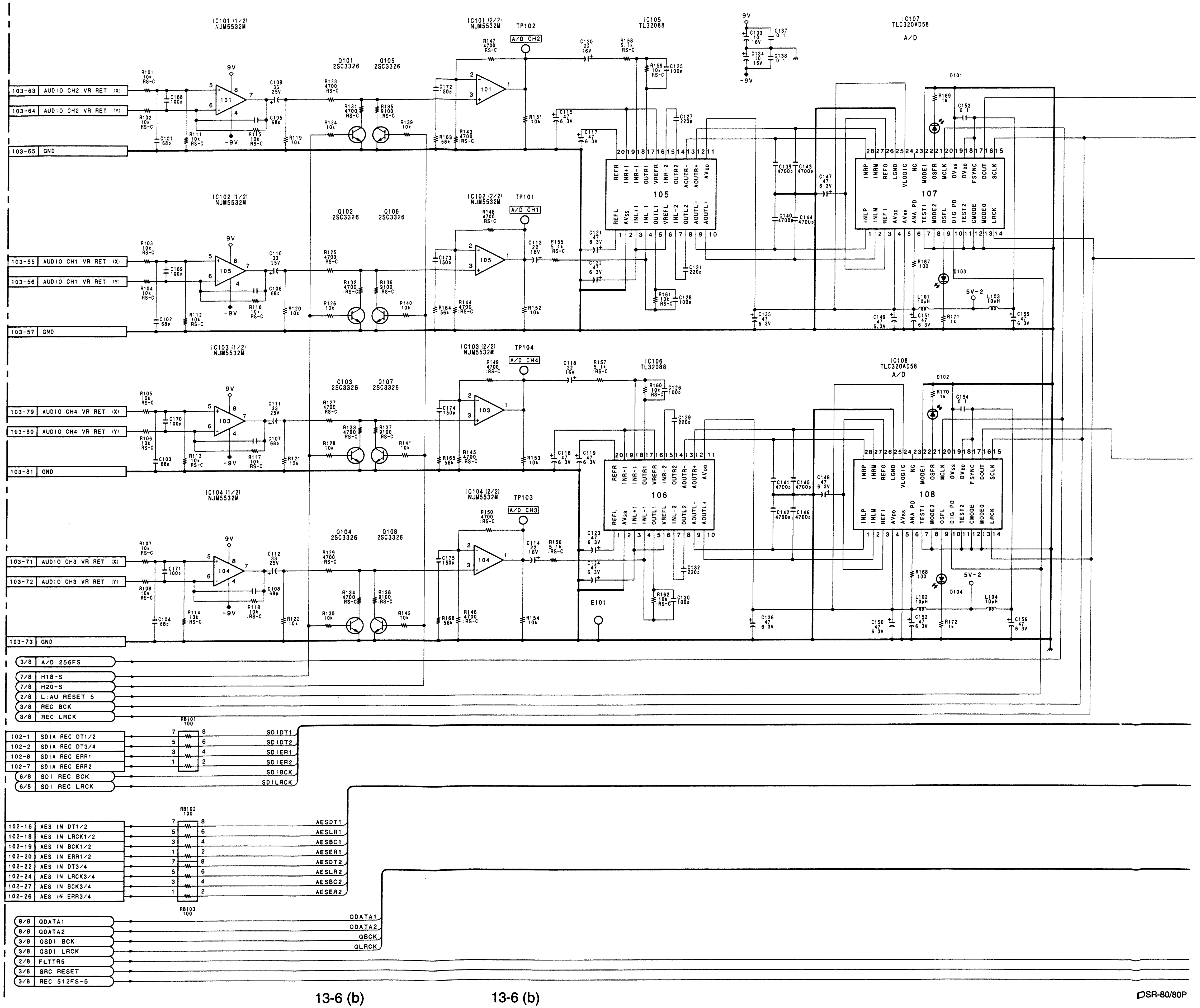

DSR-80/80P

DSR-80/80P

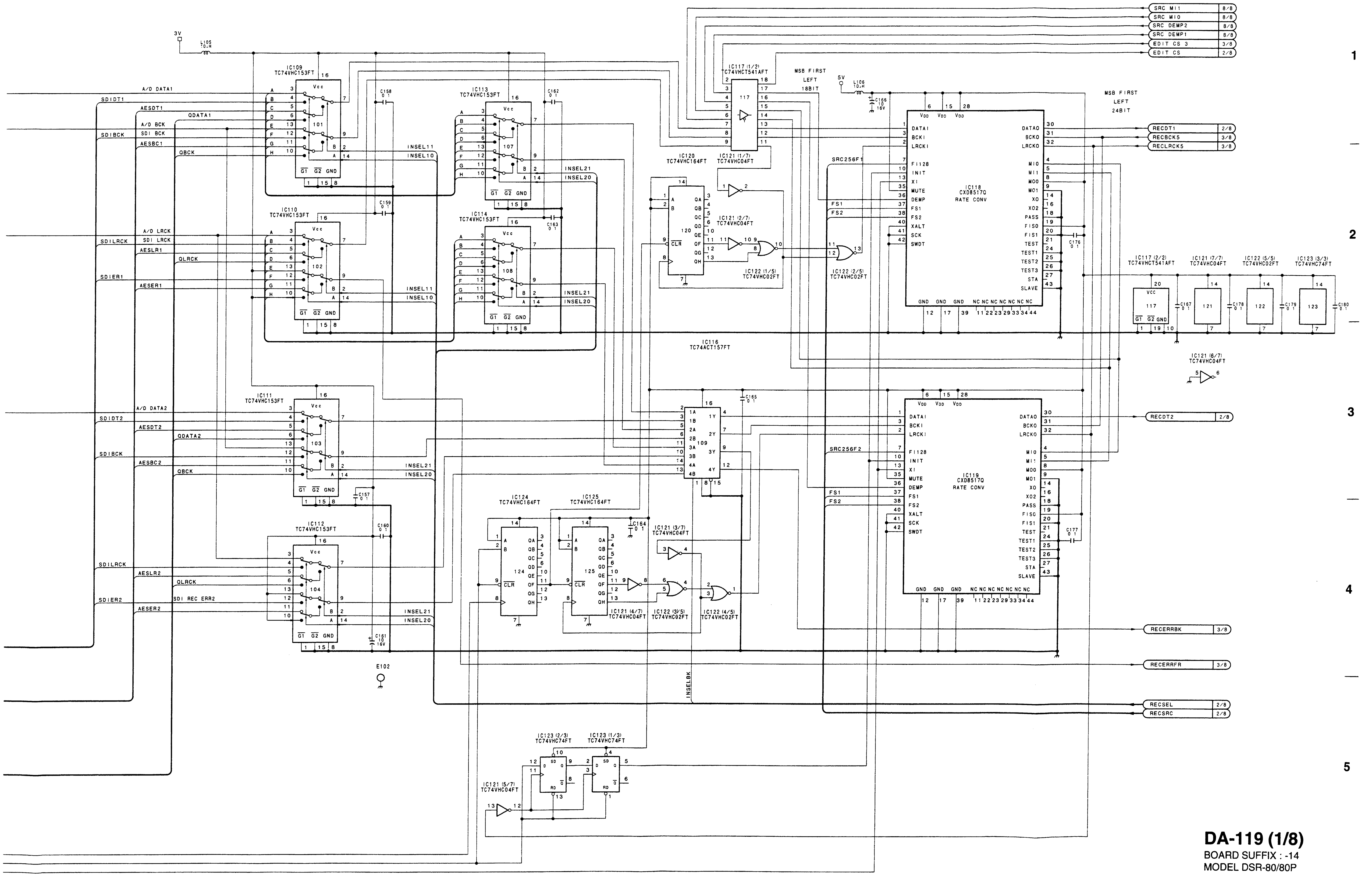

DA-119 (1/8)

BOARD SUFFIX : -14
MODEL DSR-80/80P

DA-119 (2/8): AUDIO ANALOG/DIGITAL IN/OUT PROCESS

DSR-80/80P

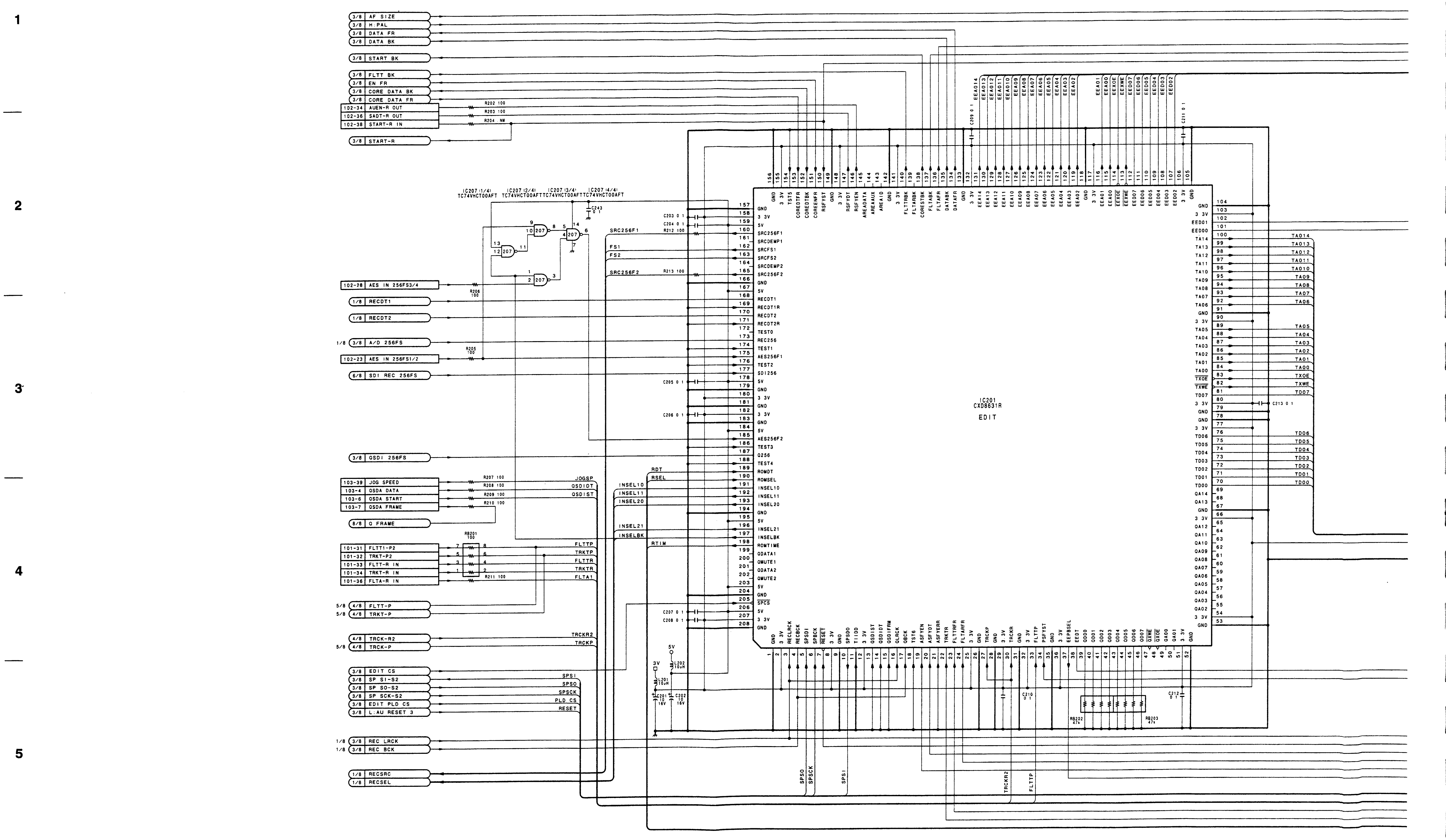

A | B | C | D | E | F | G | H

SONY-SP0754 / DRUCK 124

DSR-80/80P

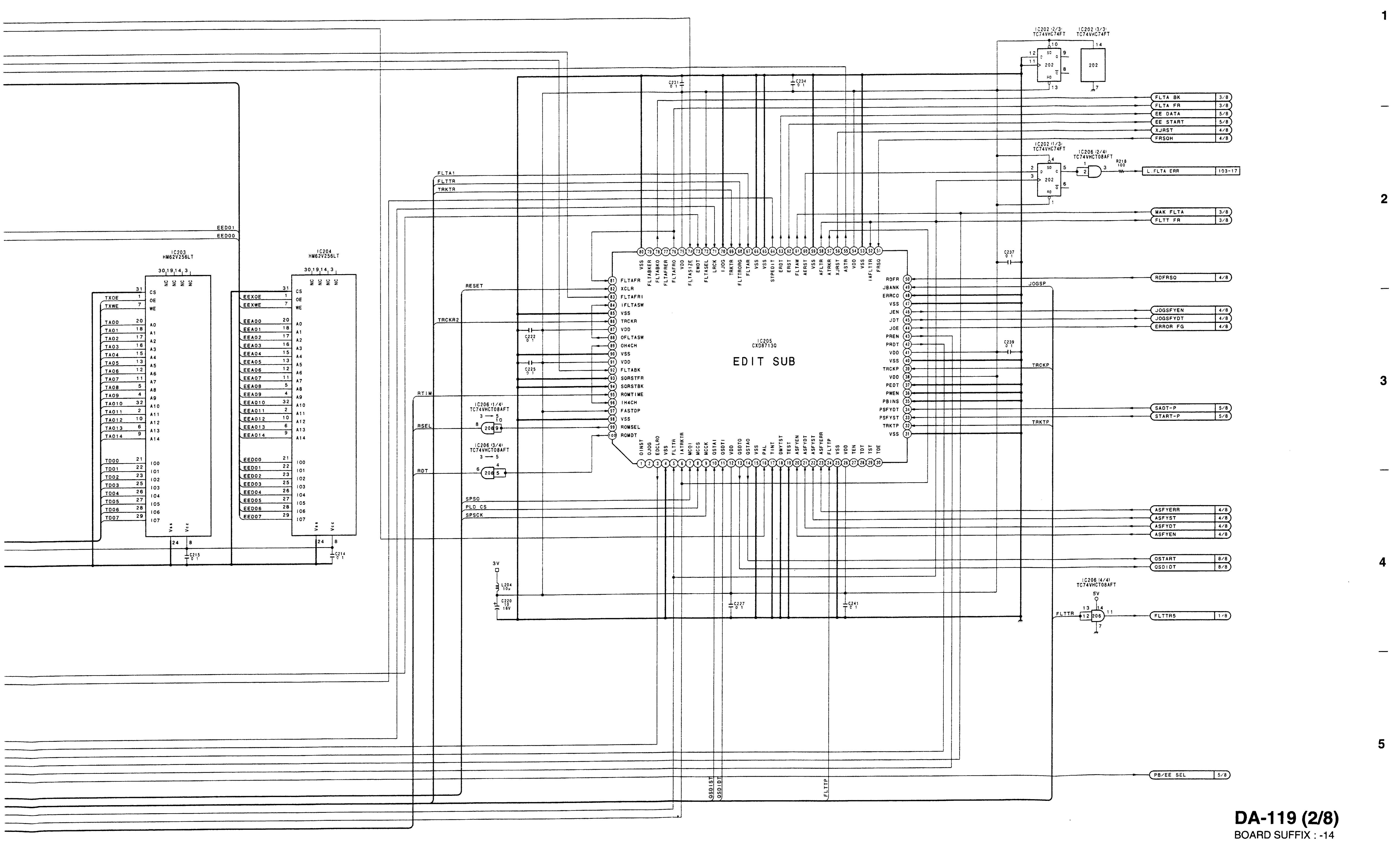

DA-119 (2/8)

BOARD SUFFIX : -14
MODEL DSR-80/80P

DA-119 (3/8): AUDIO ANALOG/DIGITAL IN/OUT PROCESS

DSR-80/80P

DSR-80/80P

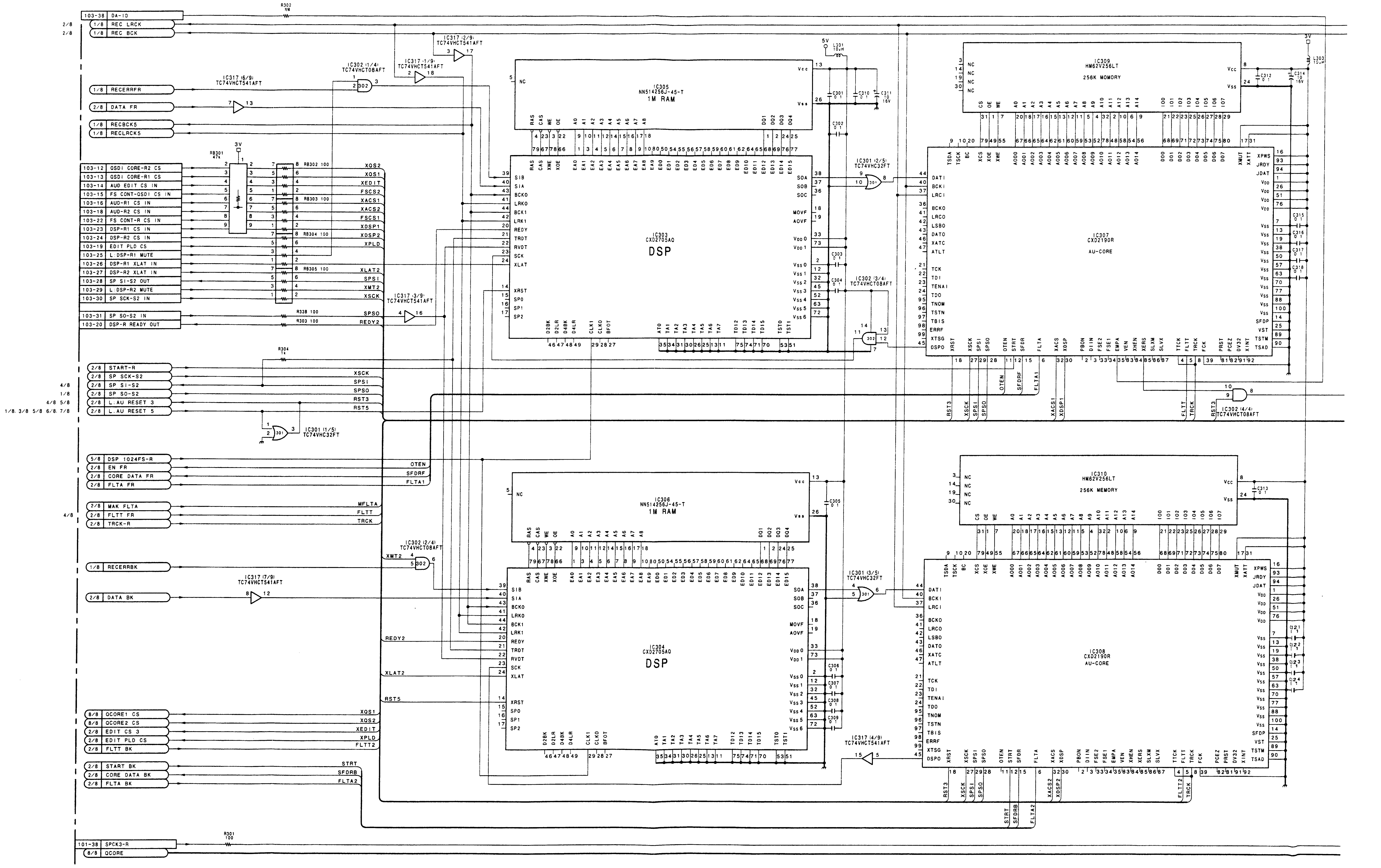

1 2 3 4 5

A B C D E F G H

DSR-80/80P

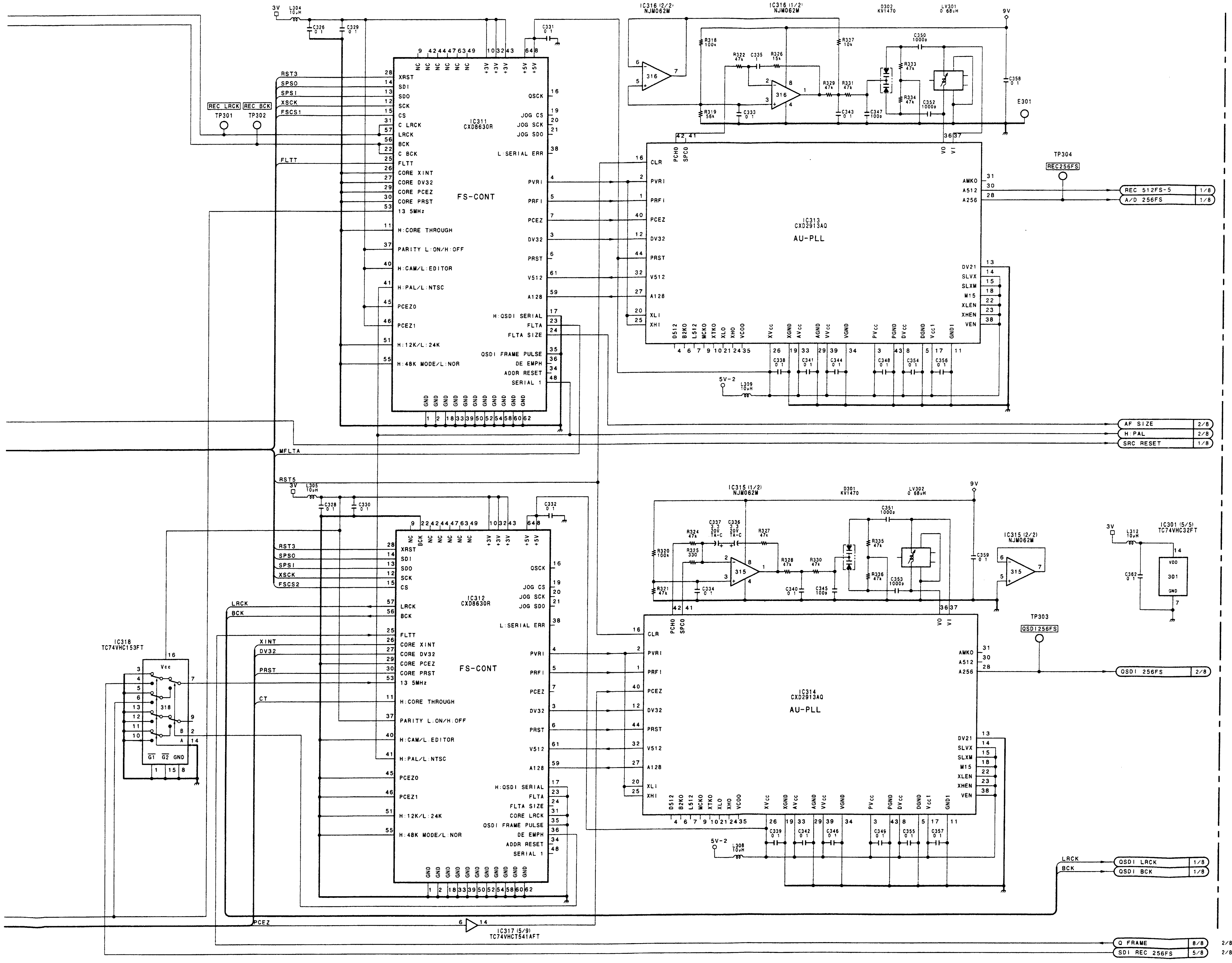

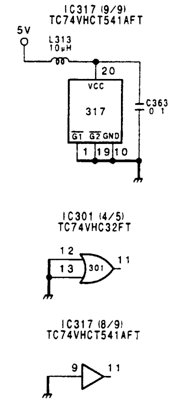

DA-119 (3/8)

① TP301 Reference Level Input
② TP302 Reference Level Input

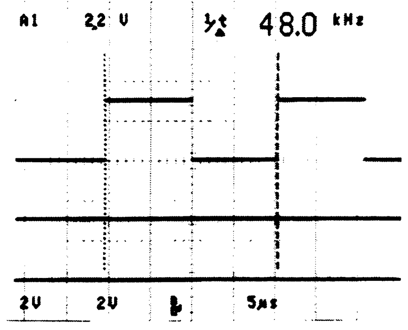

③ TP303 Reference Level Input
④ TP304 Reference Level Input

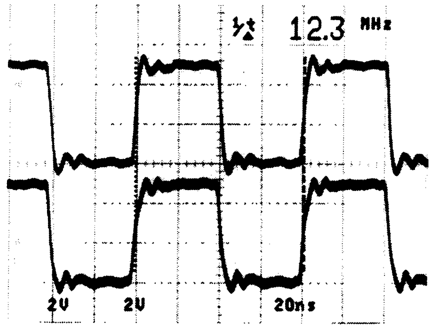

1

2

3

4

5

DA-119 (3/8)

BOARD SUFFIX : -14
MODEL DSR-80/80P

DA-119 (4/8): AUDIO ANALOG/DIGITAL IN/OUT PROCESS

DSR-80/80P

DSR-80/80P

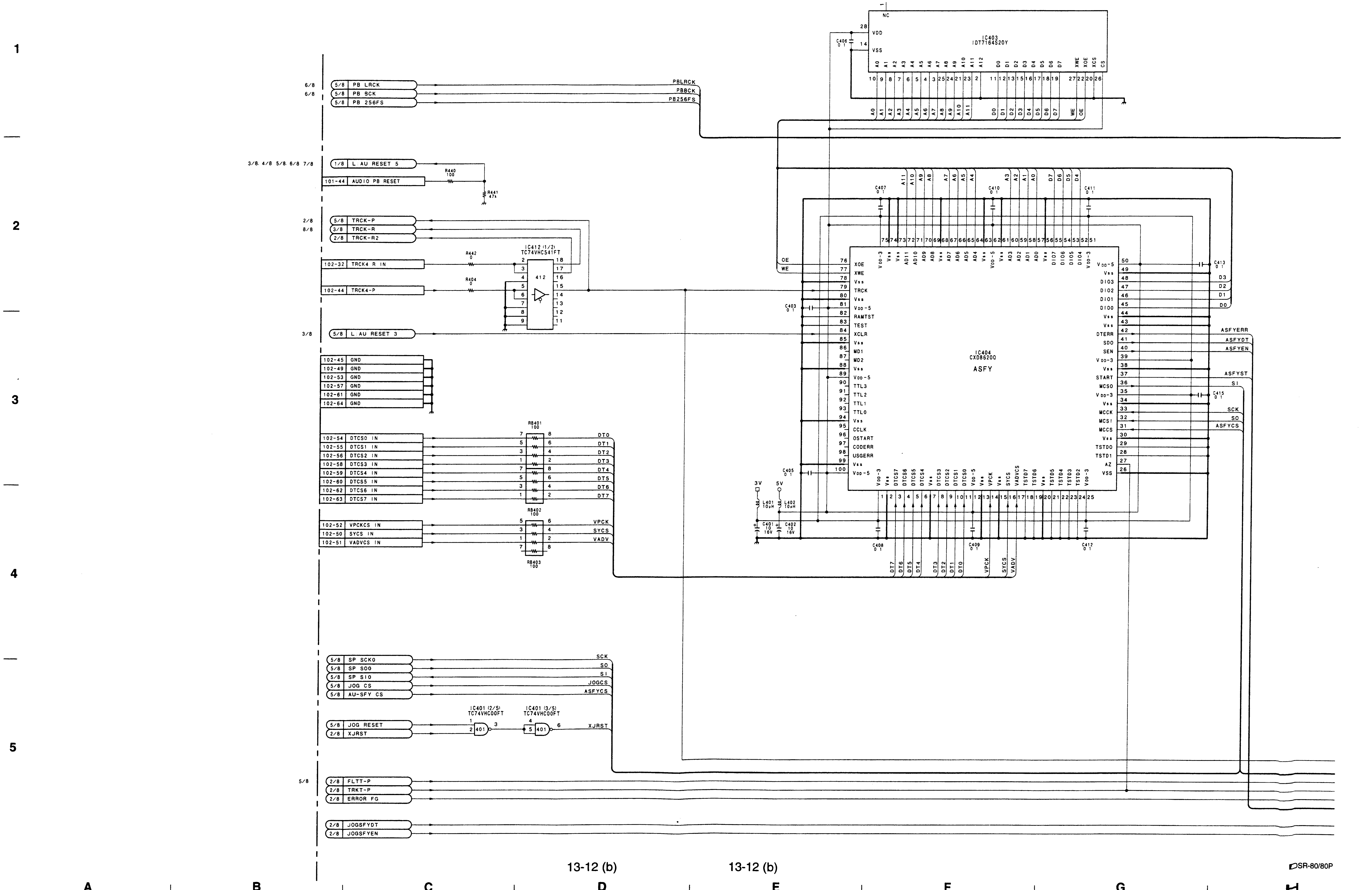

DSR-80/80P

DSR-80/80P

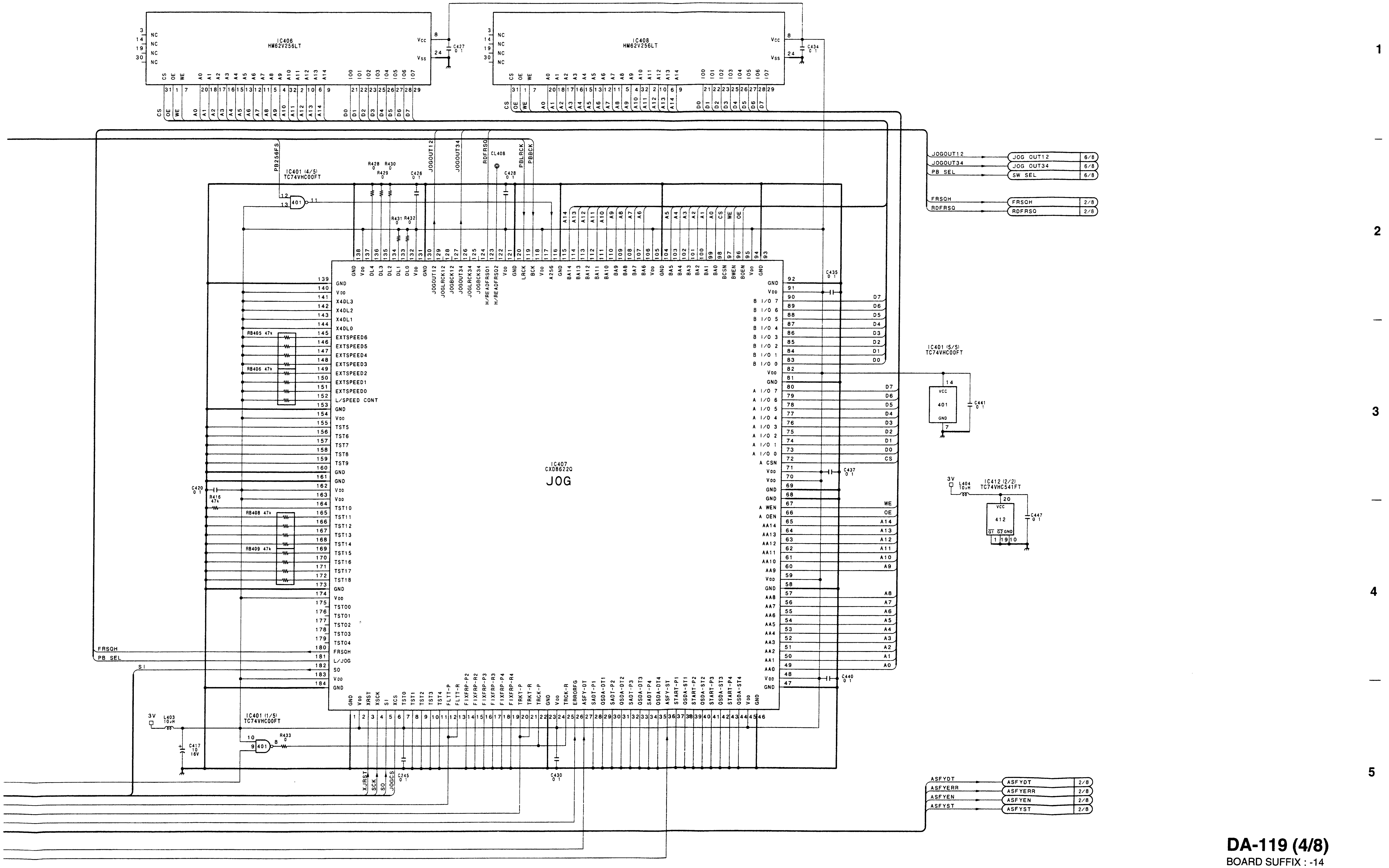

DA-119 (4/8)

BOARD SUFFIX : -14
MODEL DSR-80/80P

DA-119 (5/8): AUDIO ANALOG/DIGITAL IN/OUT PROCESS

DSR-80/80P

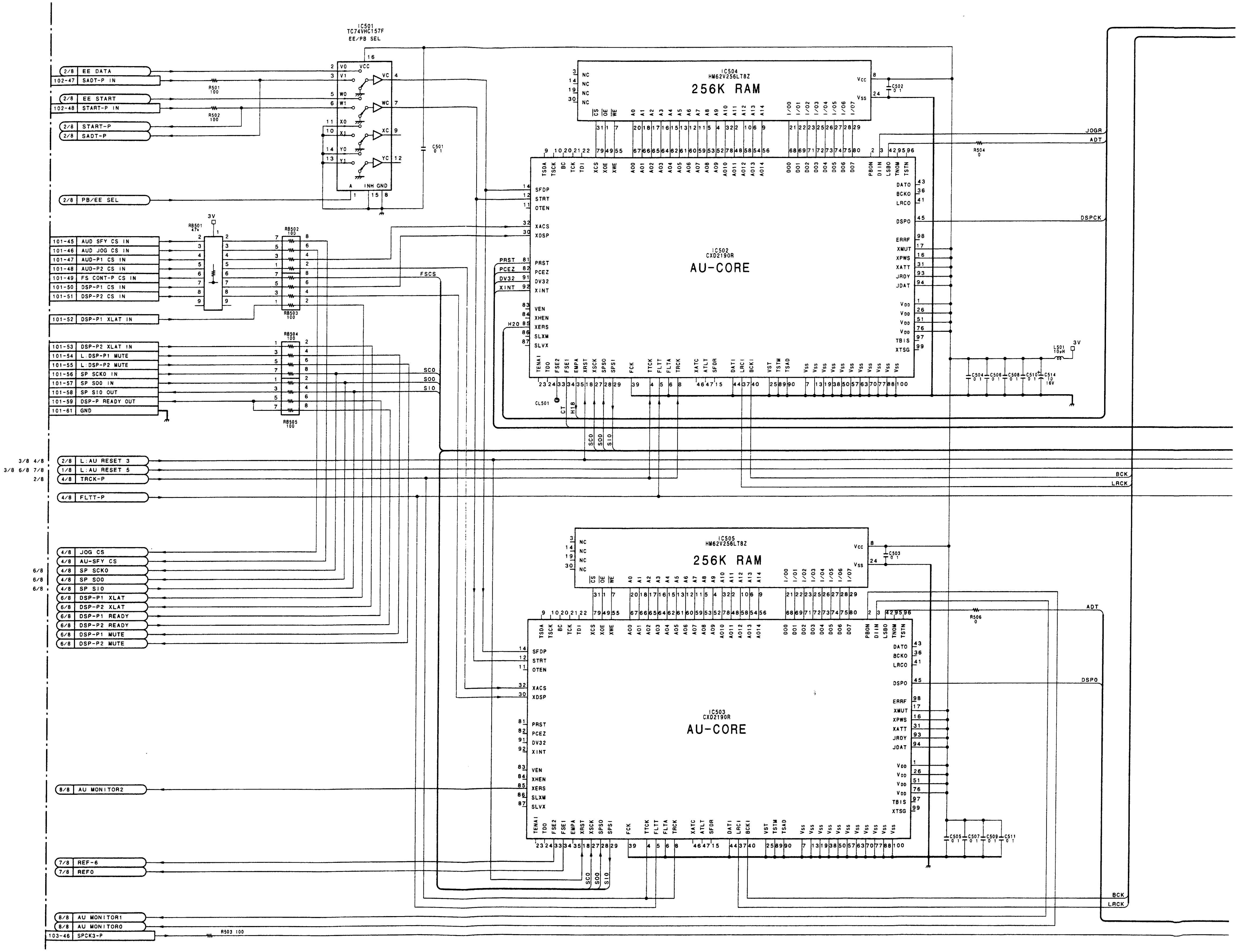

DSR-80/80P

A | B | C | D | E | F | G | H

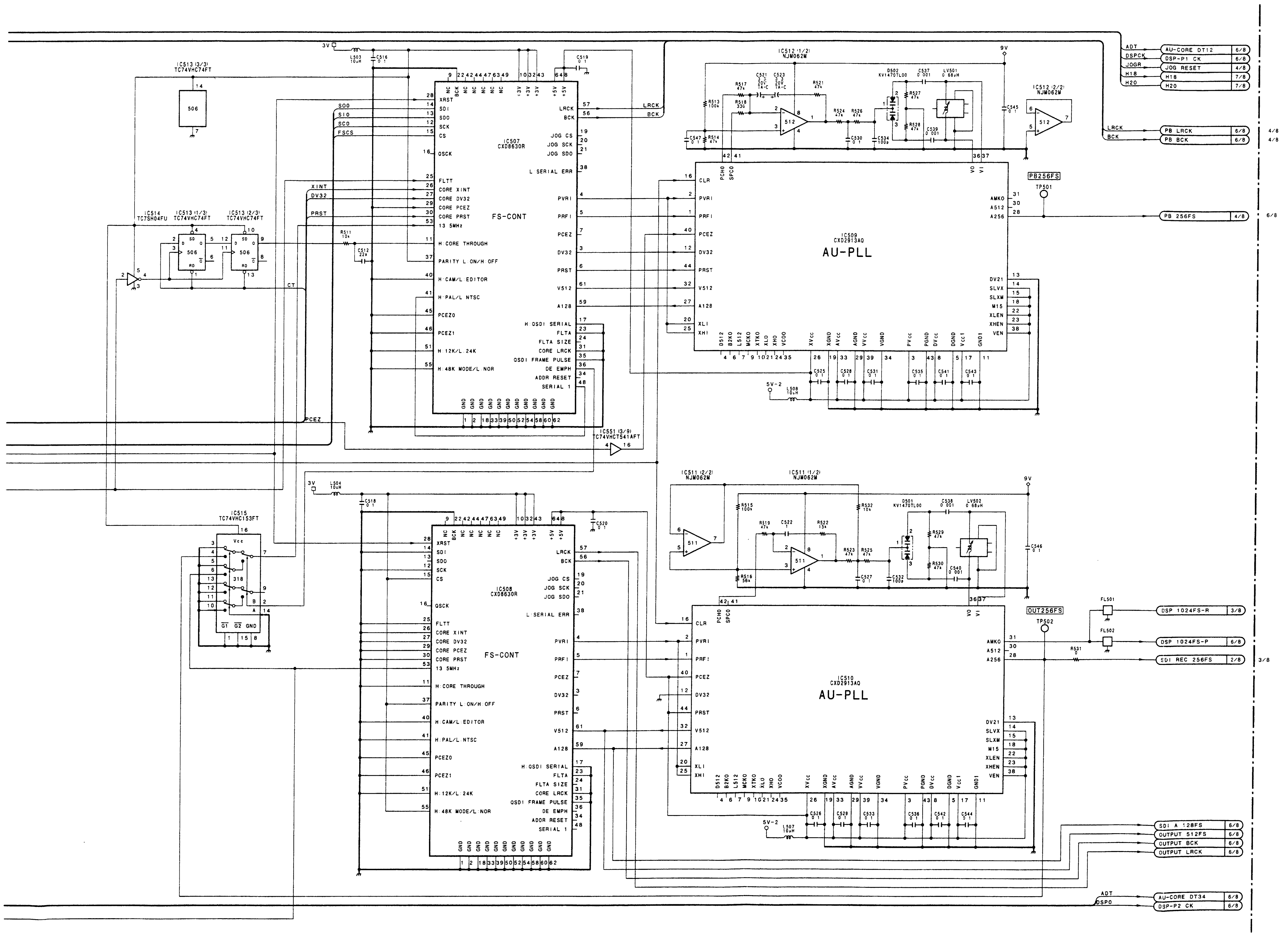

1

—

2

—

3

—

4

—

5

DA-119 (5/8)

BOARD SUFFIX : -14
MODEL DSR-80/80P

DA-119 (6/8): AUDIO ANALOG/DIGITAL IN/OUT PROCESS

DSR-80/80P

DA-119 (6/8)

① TP551 & TP553 Reference Level Input
② TP552 & TP554 Reference Level Input

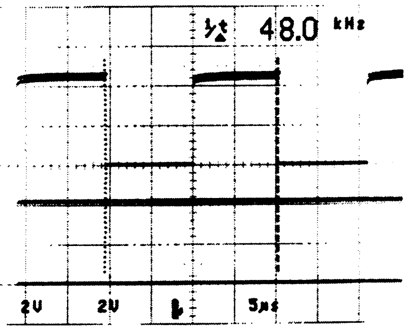

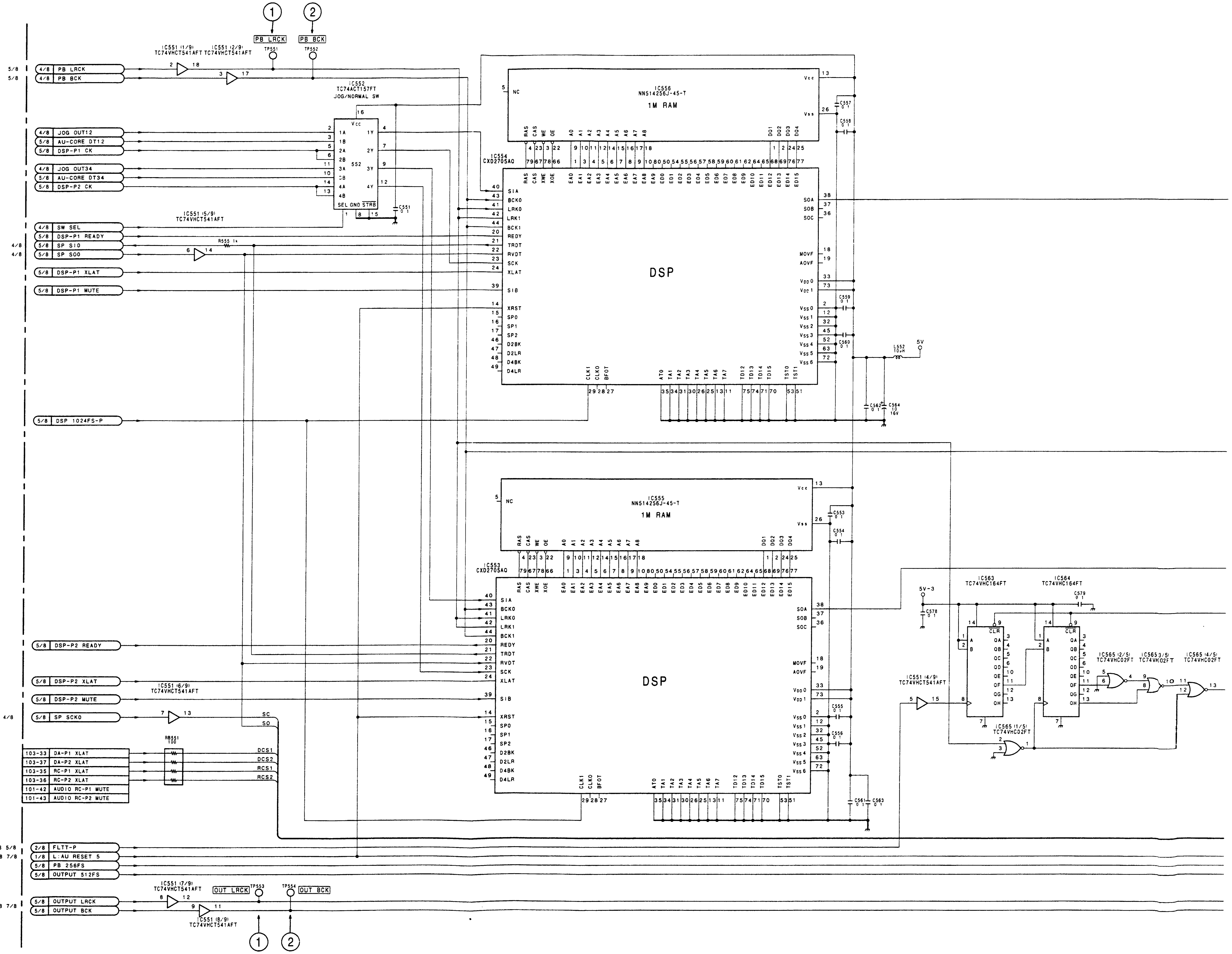

DSR-80/80P

SONY-SP0754 / DRUCK 132

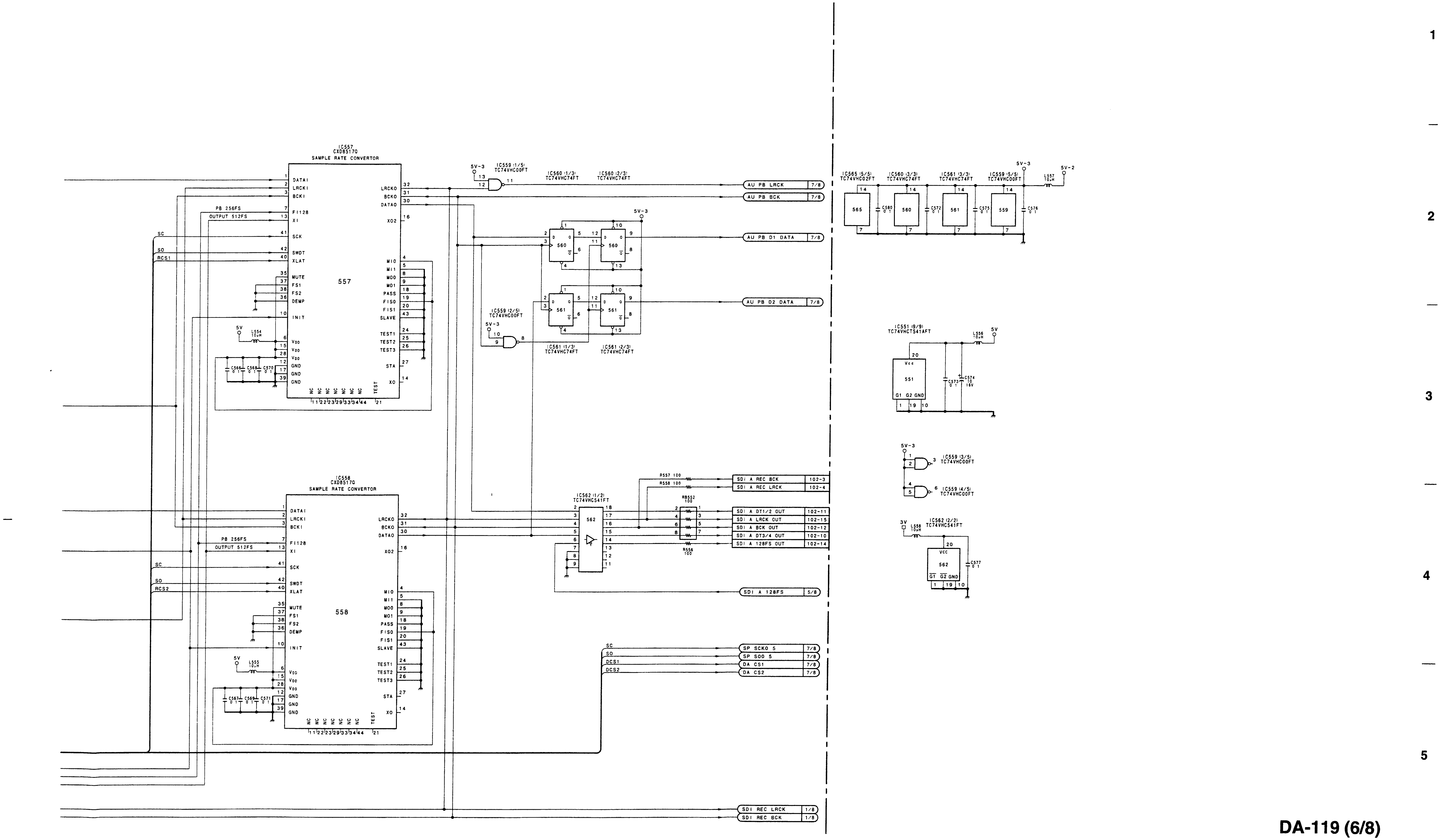

DA-119 (6/8)
BOARD SUFFIX : -14
MODEL DSR-80/80P

DA-119 (7/8): AUDIO ANALOG/DIGITAL IN/OUT PROCESS

DSR-80/80P

1

2

3

4

5

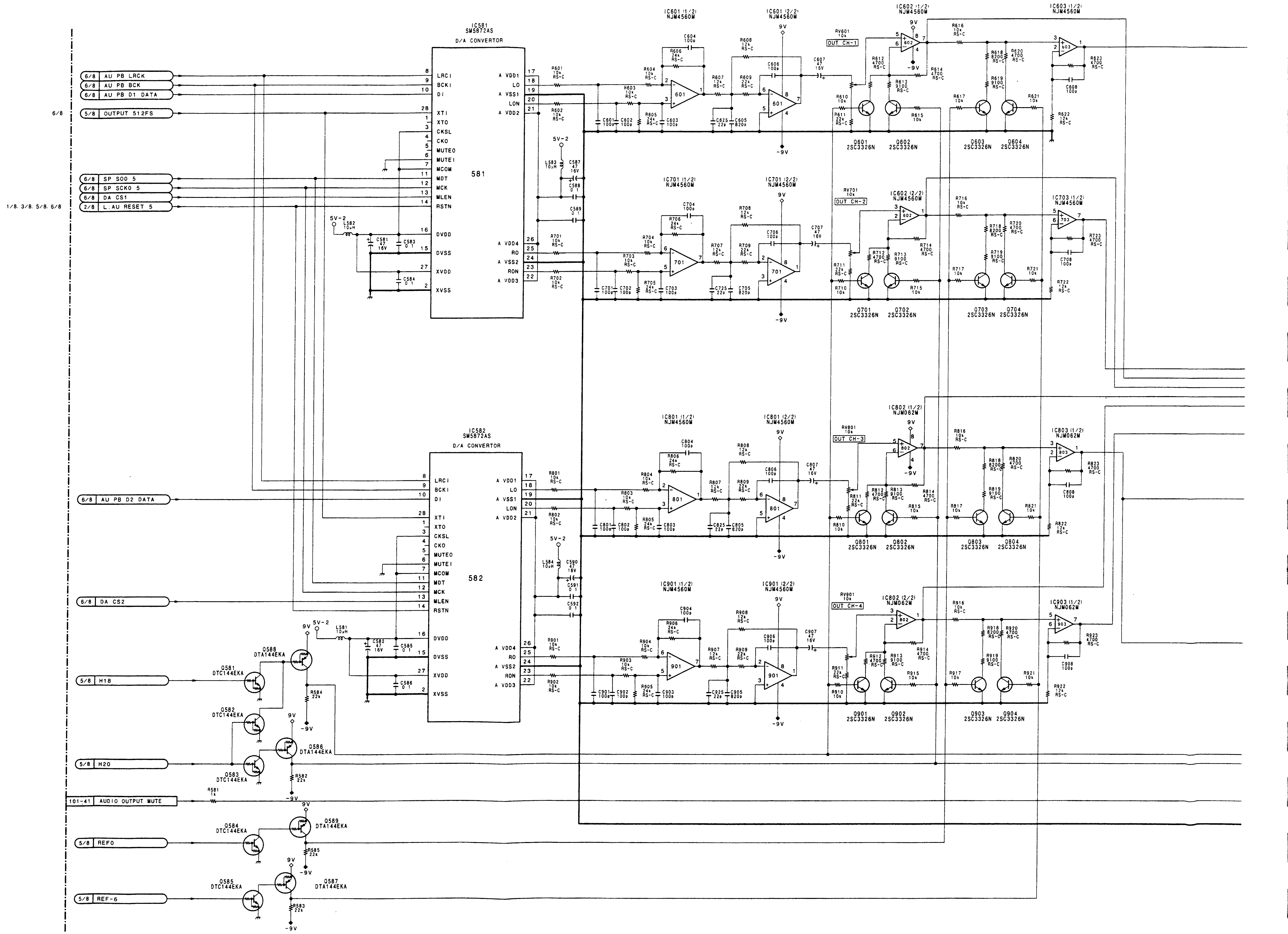

A | B | C | D | E | F | G | H

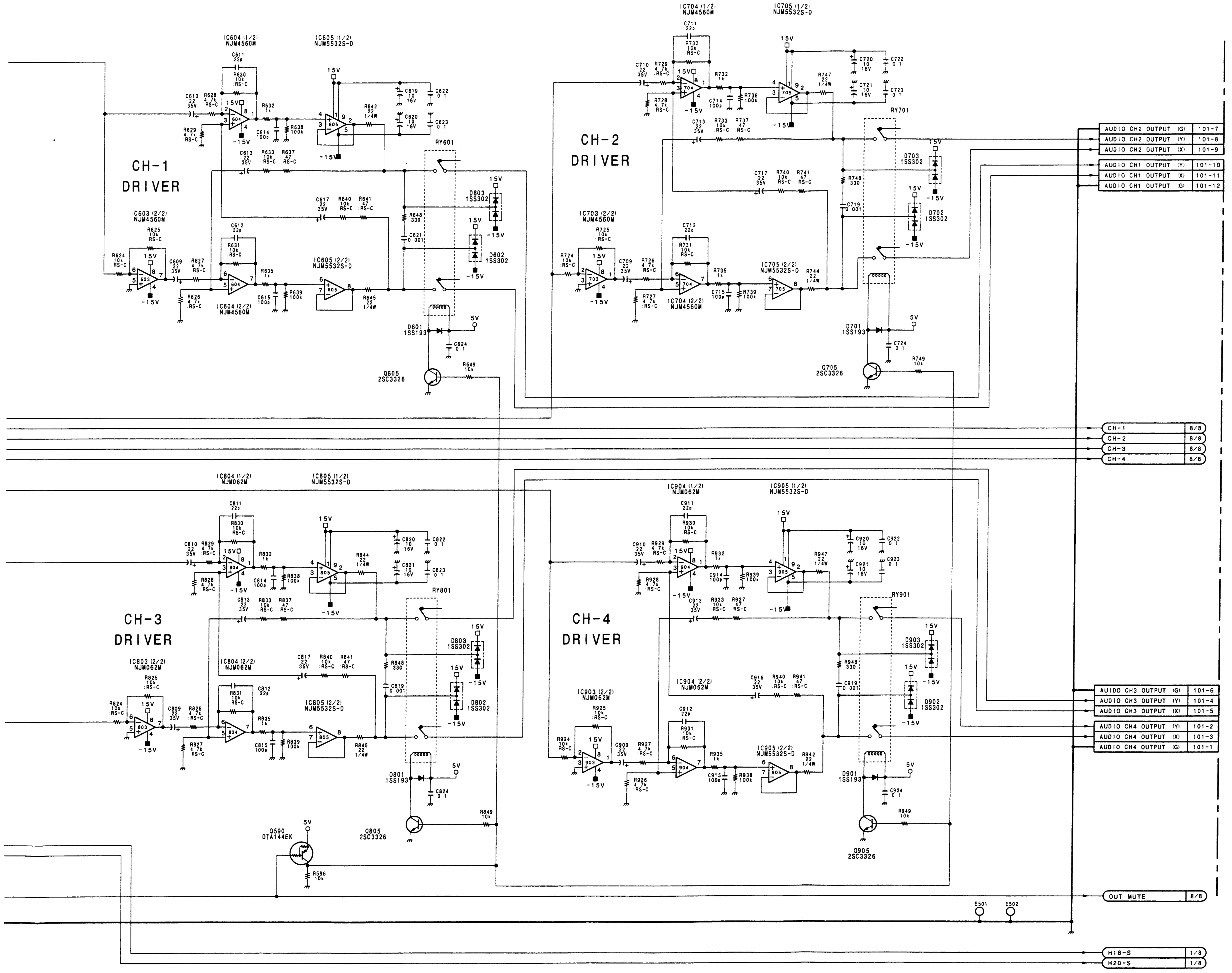

1 — 2 — 3 — 4 — 5

DA-119 (7/8)

BOARD SUFFIX : -14
MODEL DSR-80/80P

DA-119 (8/8): AUDIO ANALOG/DIGITAL IN/OUT PROCESS

DSR-80/80P

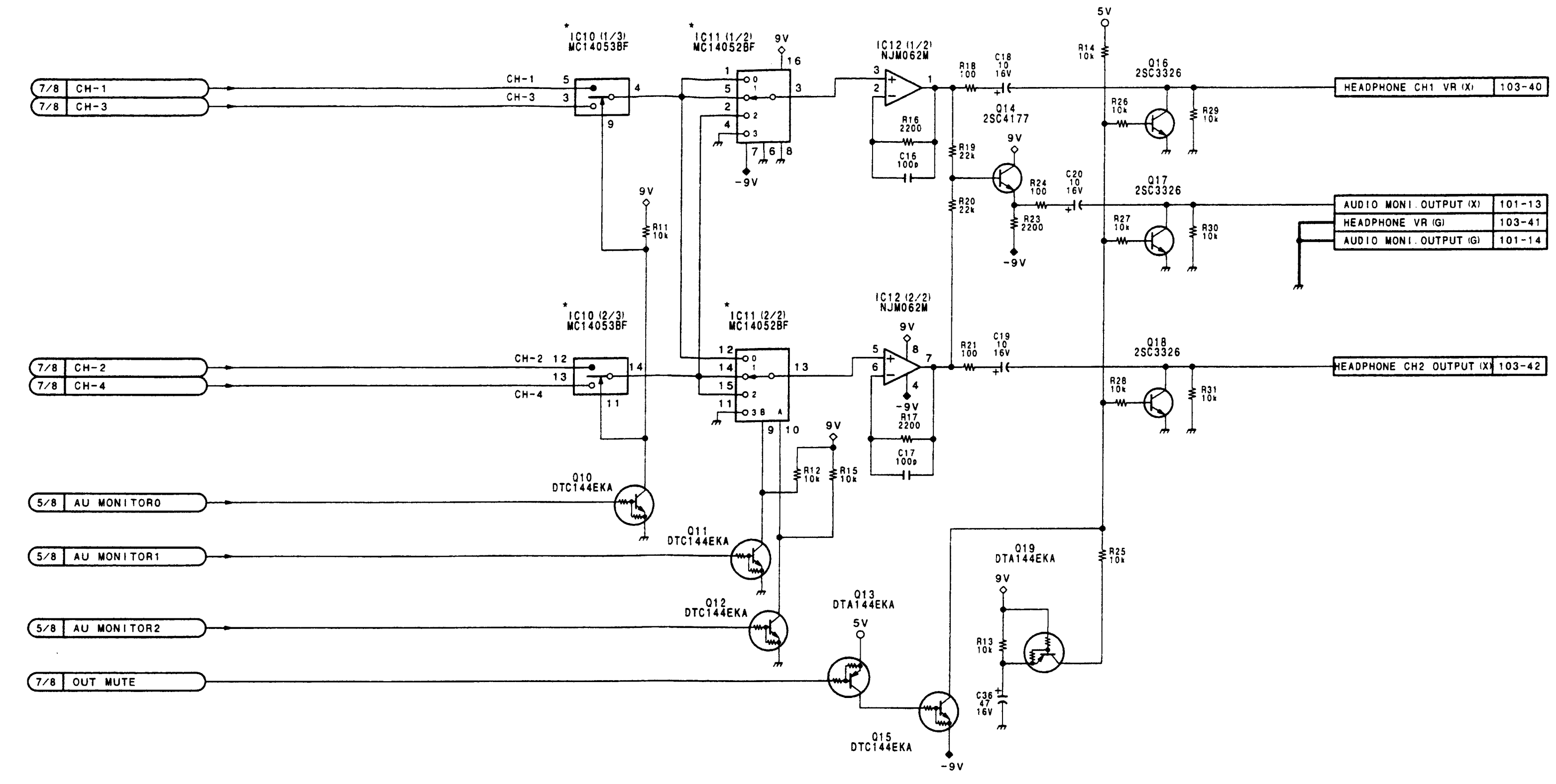

REF NO.	CHANGED INFORMATION	LOT NO.
IC10	MC14053BF-T2→MC14053BFEL	804-
IC11	MC14052BF-T2→MC14052BFEL	

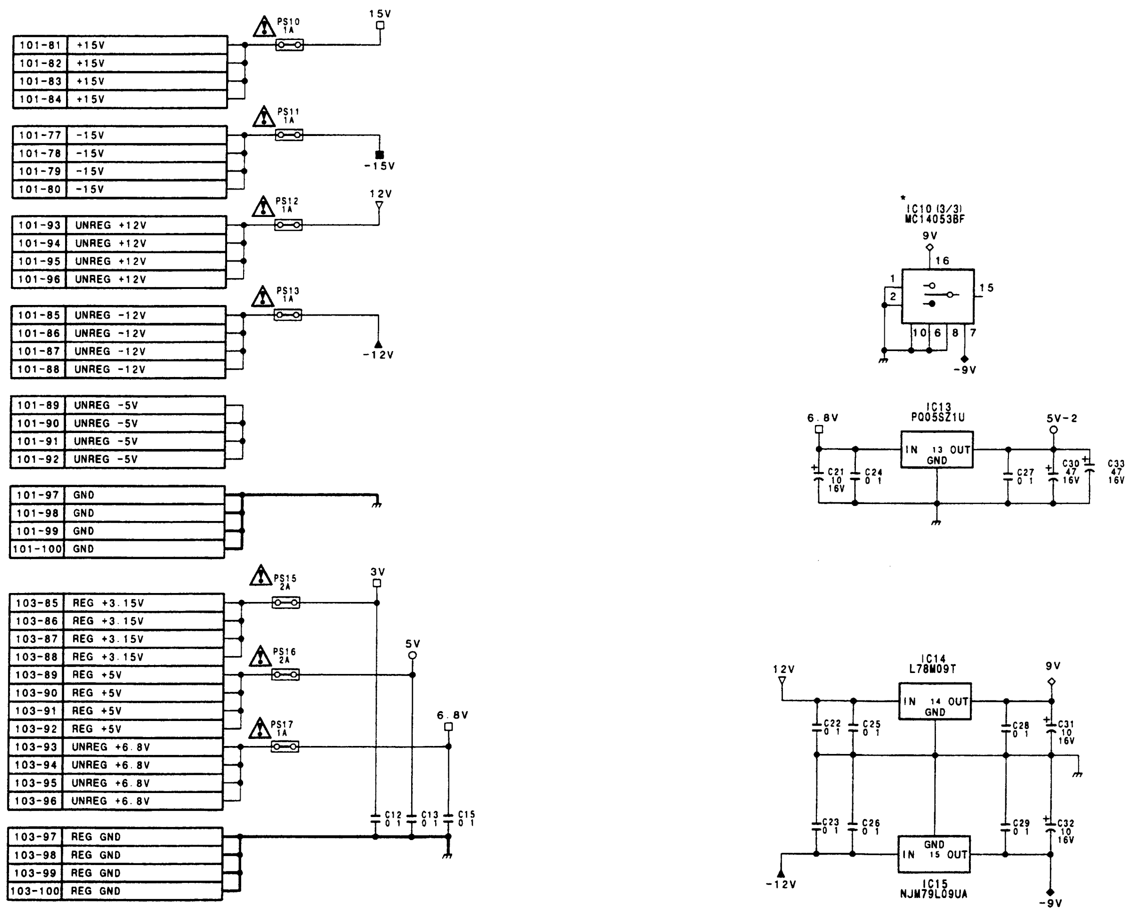

DSR-80/80P

A | B | C | D | E | F | G | H

SONY-SP0754 / DRUCK 136

1
2
3
4
5

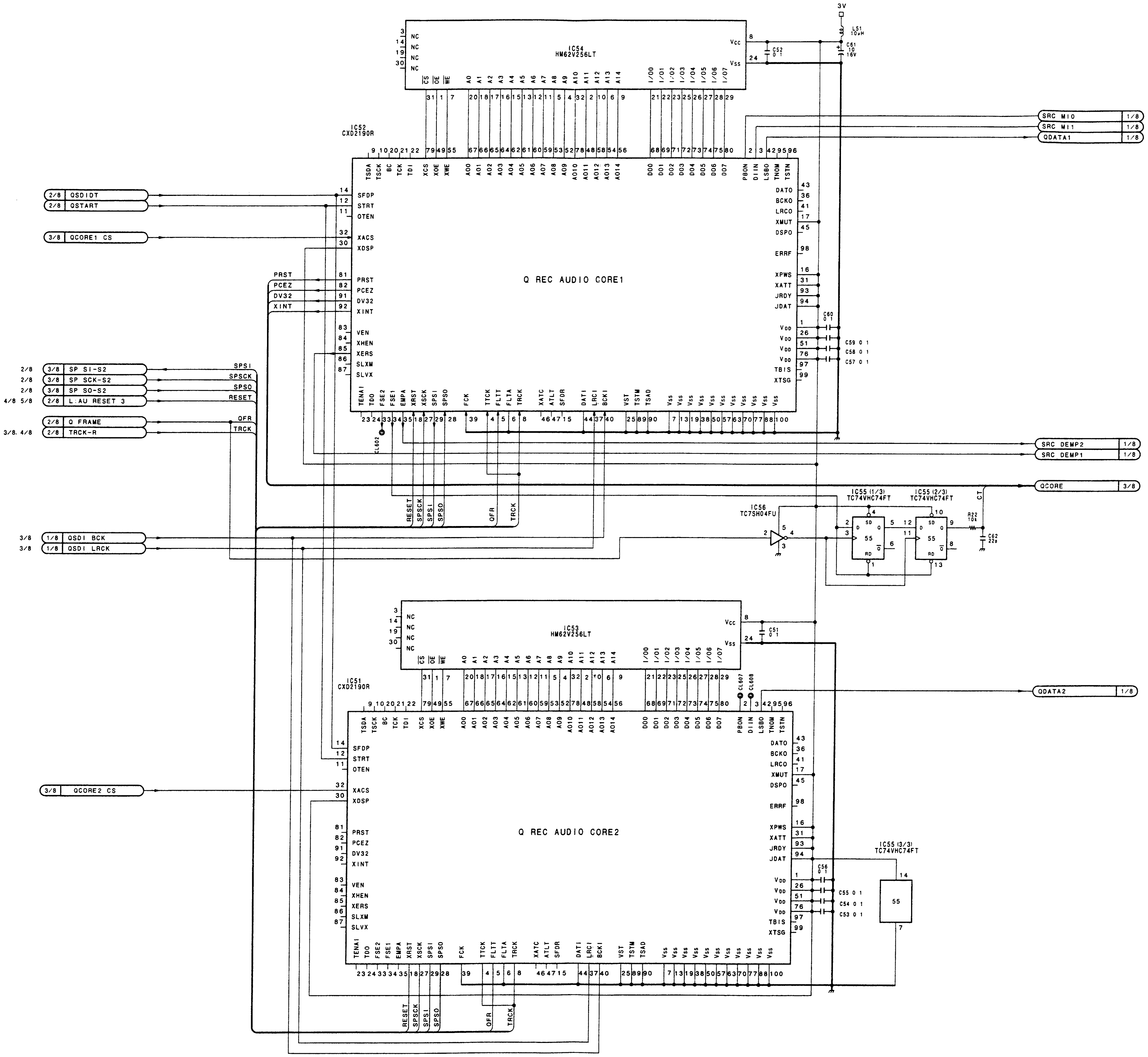

DA-119 (8/8)

BOARD SUFFIX : -14
MODEL DSR-80/80P

DA-119 (1/8): AUDIO ANALOG/DIGITAL IN/OUT PROCESS

1

DA-119 (1/8)

① TP101~TP-104 Reference Level Input

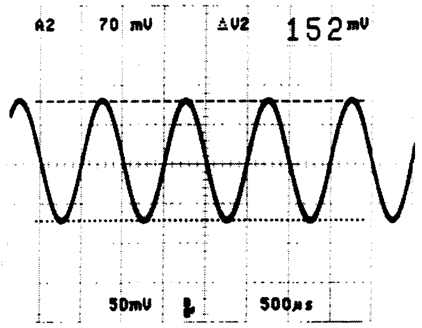

2

① TP101~104 Reference Level Input

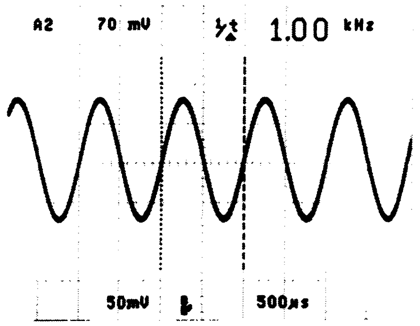

3

4

5

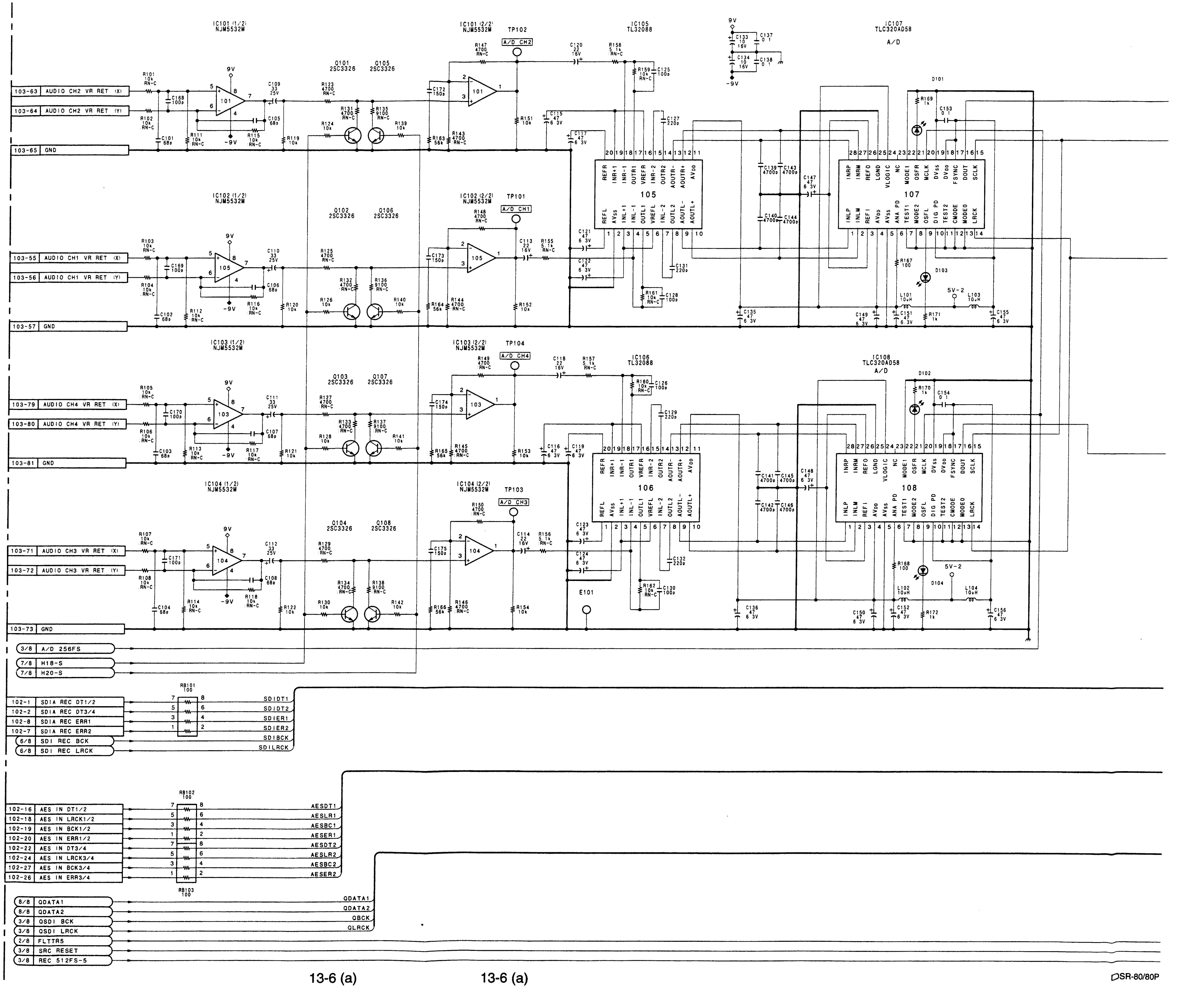

DSR-80/80P

DSR-80/80P

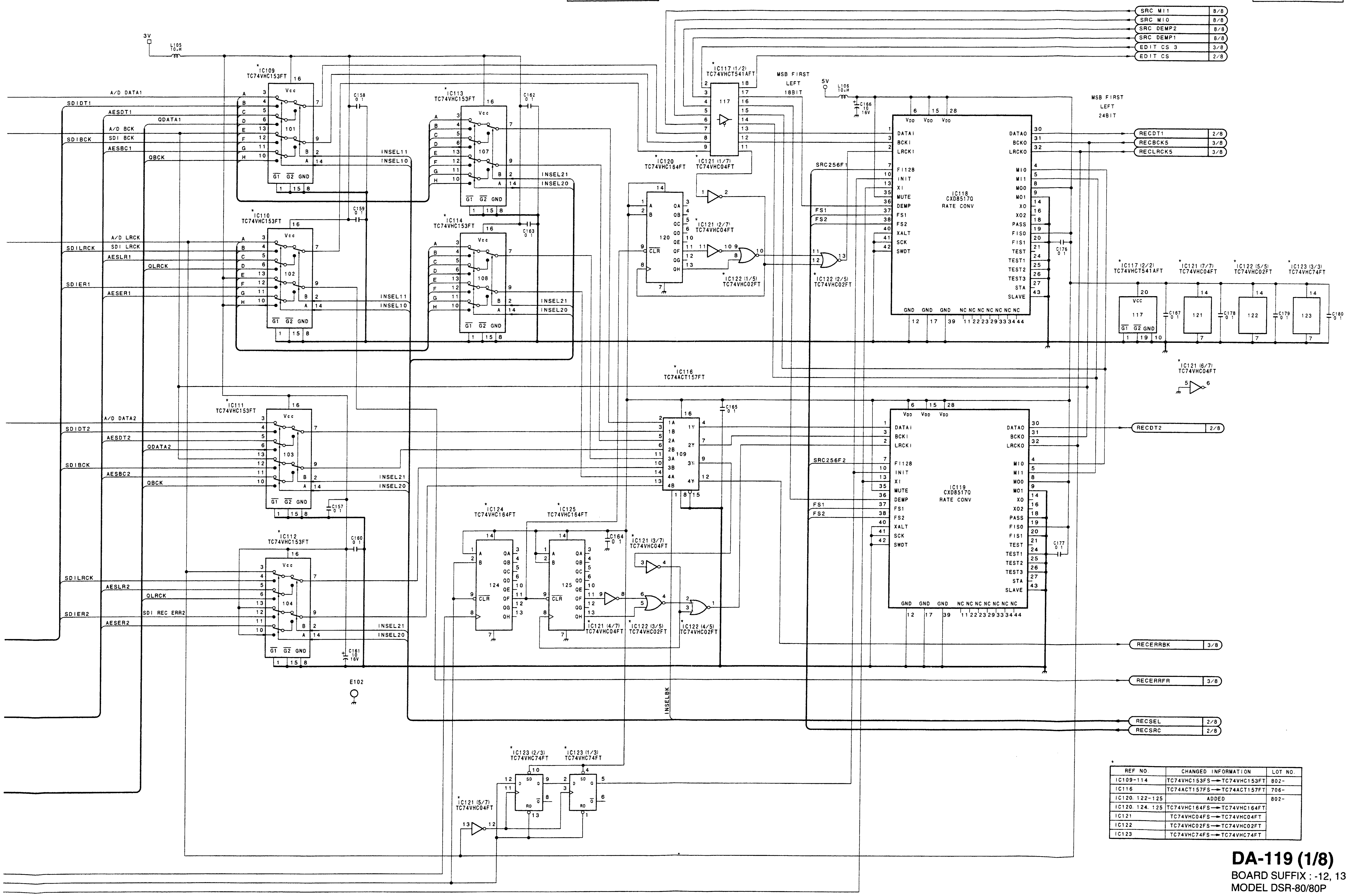

*

REF NO.	CHANGED INFORMATION	LOT NO.
IC109-114	TC74VHC153FS→TC74VHC153FT	802-
IC116	TC74ACT157FS→TC74ACT157FT	706-
IC120. 122-125	ADDED	802-
IC120. 124. 125	TC74VHC164FS→TC74VHC164FT	
IC121	TC74VHC04FS→TC74VHC04FT	
IC122	TC74VHC02FS→TC74VHC02FT	
IC123	TC74VHC74FS→TC74VHC74FT	

DA-119 (1/8)

BOARD SUFFIX : -12, 13
MODEL DSR-80/80P

DA-119 (2/8): AUDIO ANALOG/DIGITAL IN/OUT PROCESS

DSR-80/80P

1

2

3

4

5

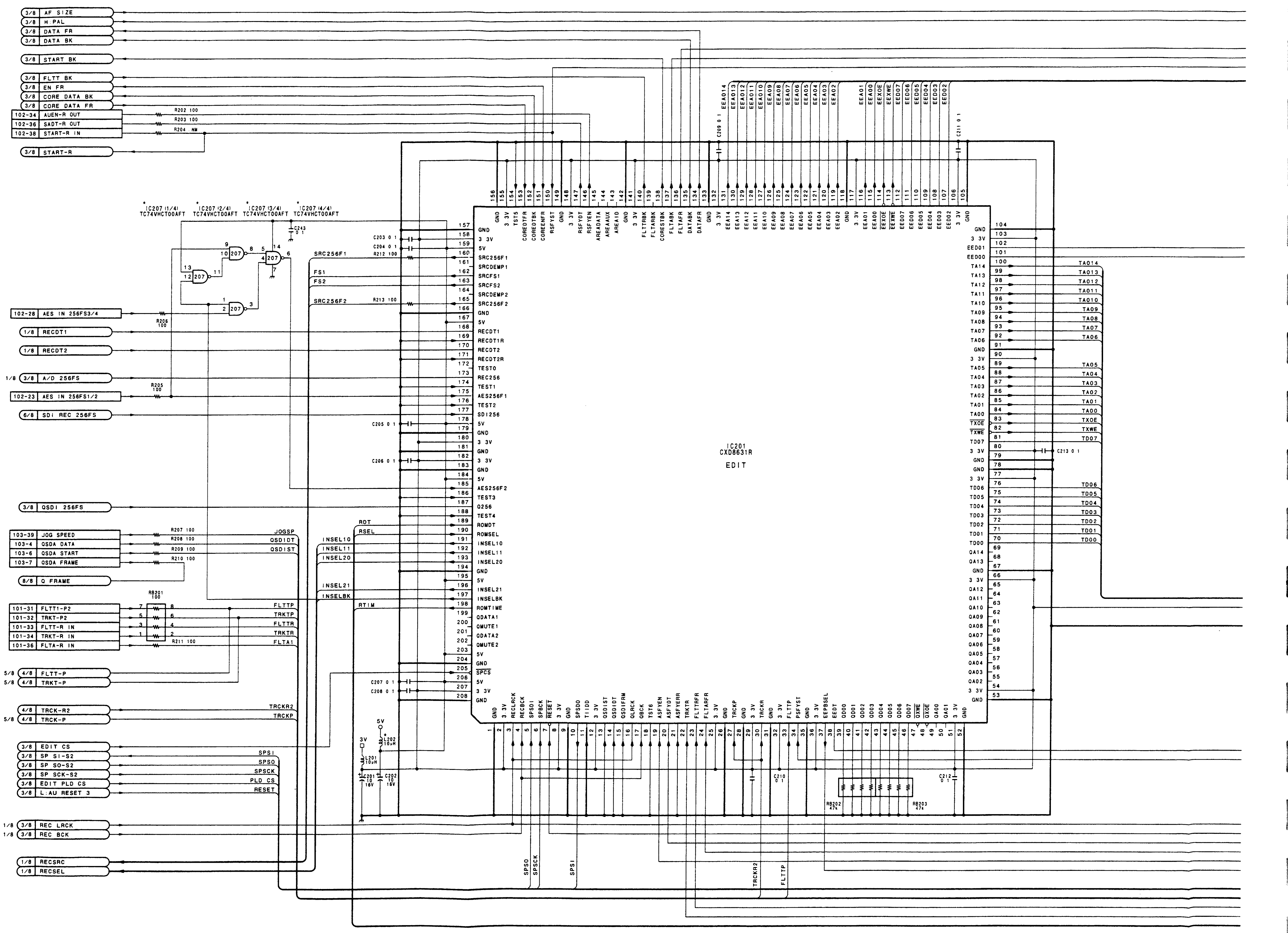

13-8 (a) 13-8 (a)

DSR-80/80P

A | B | C | D | E | F | G | H

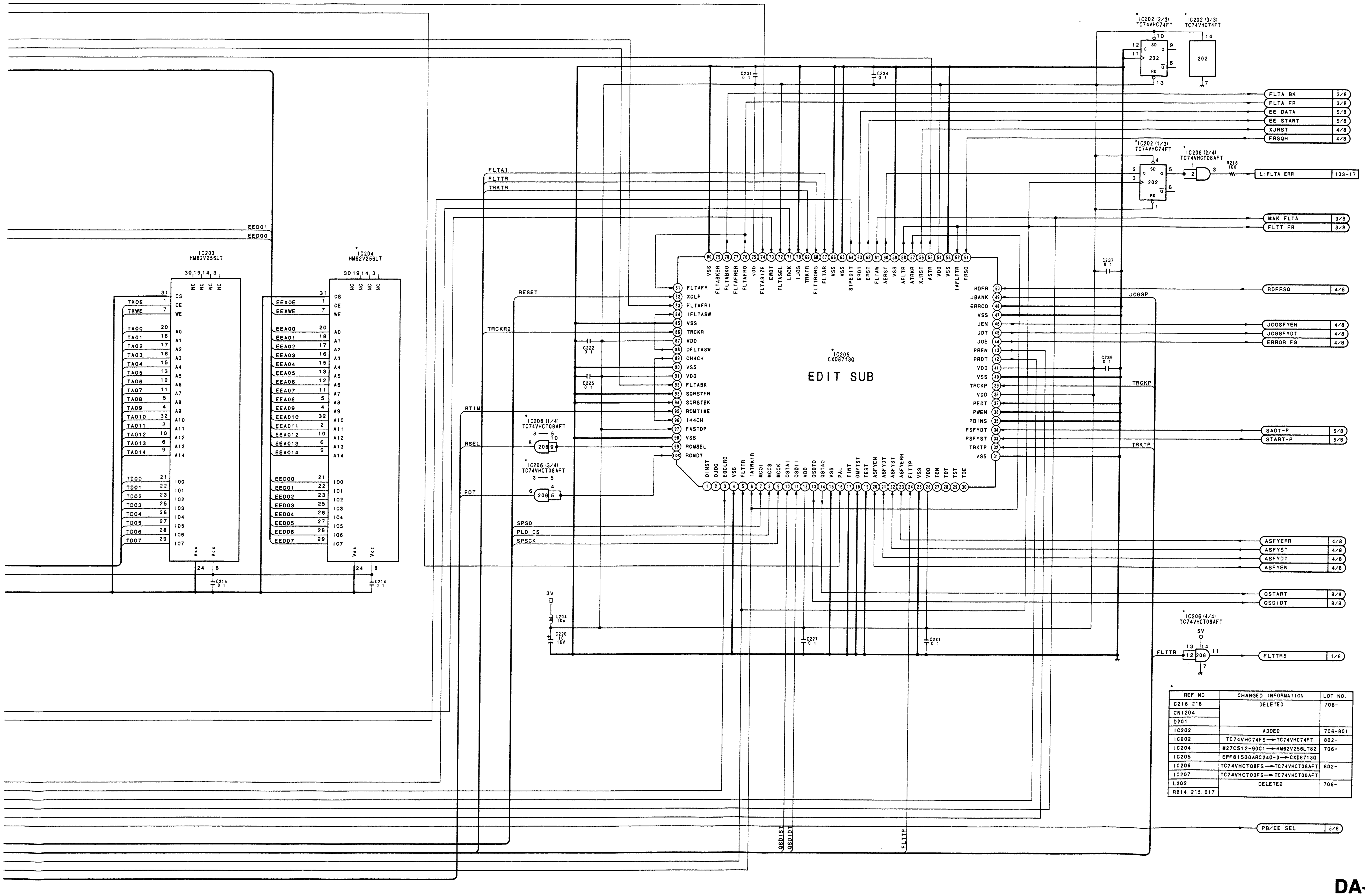

*

REF NO.	CHANGED INFORMATION	LOT NO.
C216. 218	DELETED	706-
CN1204		
D201		
IC202	ADDED	706-801
IC202	TC74VHC74FS→TC74VHC74FT	802-
IC204	M27C512-90C1→HM62V256LT82	706-
IC205	EPF81500ARC240-3→CXD8713Q	
IC206	TC74VHCT08FS→TC74VHCT08AFT	802-
IC207	TC74VHCT00FS→TC74VHCT00AFT	
L202	DELETED	706-
R214. 215. 217		

DA-119 (2/8)
BOARD SUFFIX : -12, 13
MODEL DSR-80/80P

DSR-80/80P

DA-119 (3/8): AUDIO ANALOG/DIGITAL IN/OUT PROCESS

DSR-80/80P

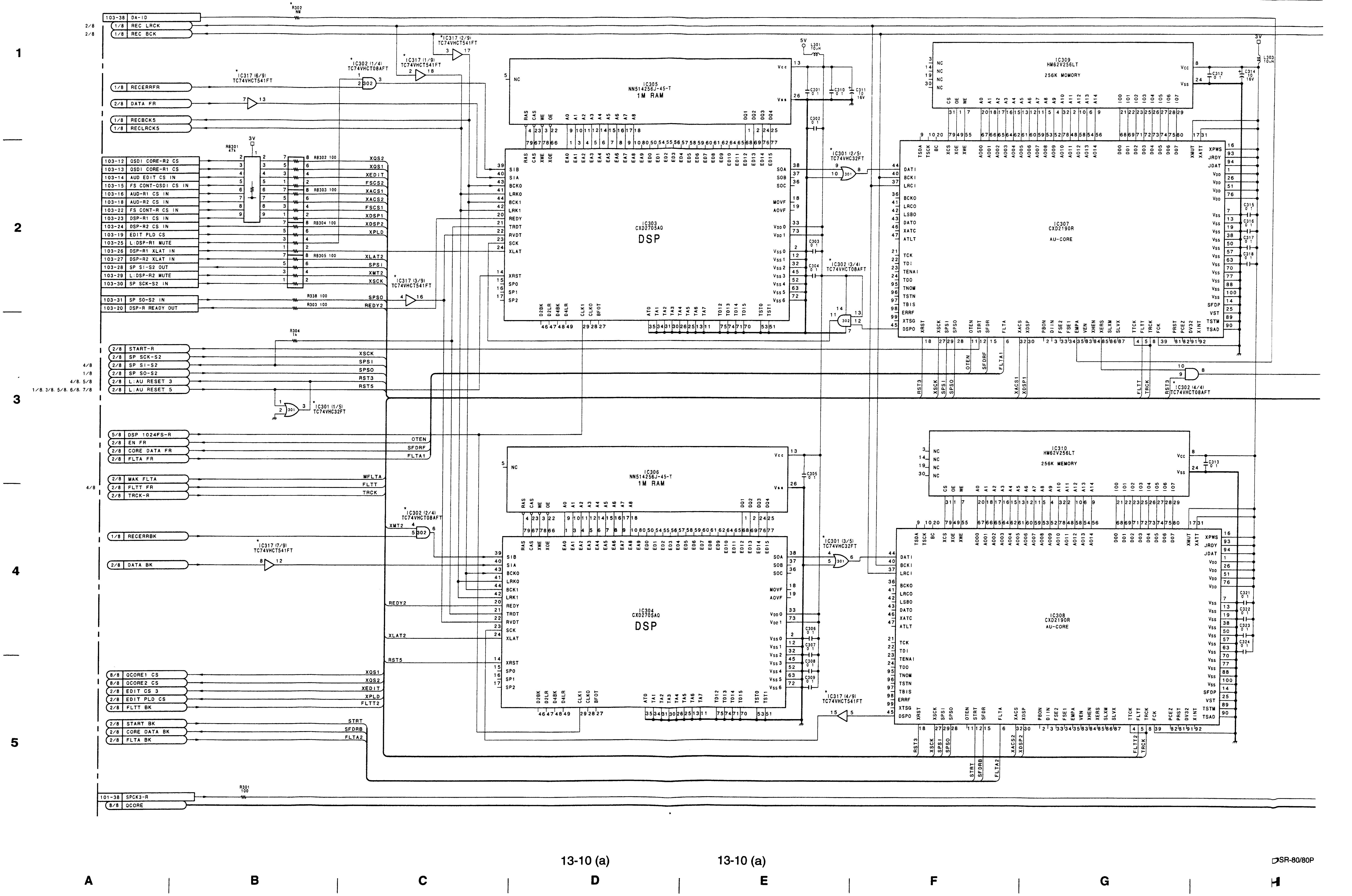

DSR-80/80P

DSR-80/80P

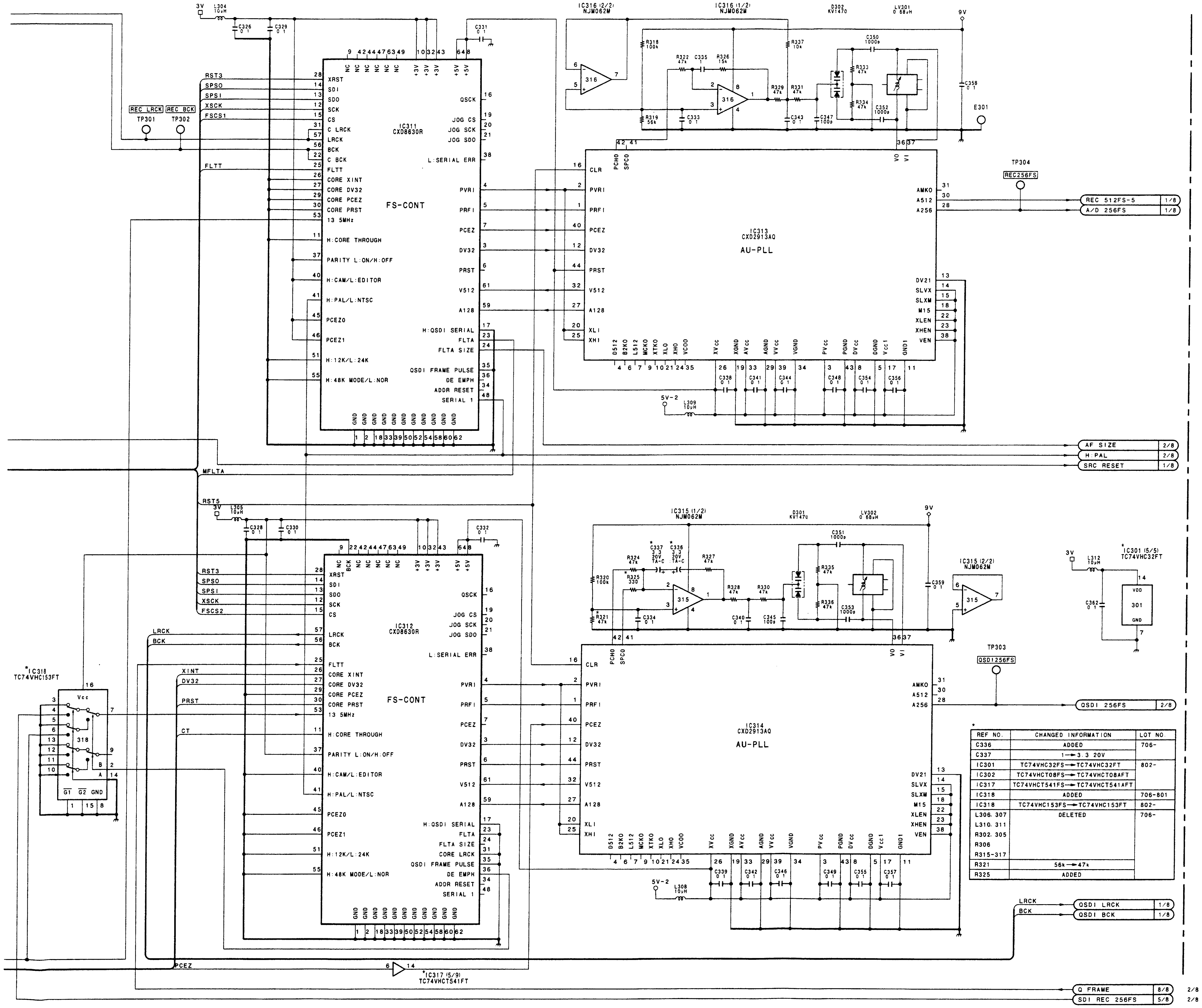

REF NO.	CHANGED INFORMATION	LOT NO.
C336	ADDED	706-
C337	1→3.3 20V	
IC301	TC74VHC32FS→TC74VHC32FT	802-
IC302	TC74VHCT08FS→TC74VHCT08AFT	
IC317	TC74VHCT541FS→TC74VHCT541AFT	
IC318	ADDED	706-801
IC318	TC74VHC153FS→TC74VHC153FT	802-
L306, 307 L310, 311 R302, 305 R306 R315-317	DELETED	706-
R321	56k→47k	
R325	ADDED	

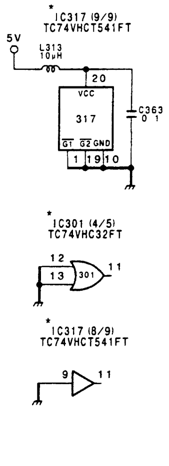

DA-119 (3/8)

① TP301 Reference Level Input
② TP302 Reference Level Input

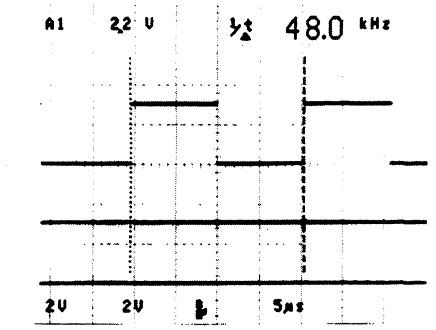

③ TP303 Reference Level Input
④ TP304 Reference Level Input

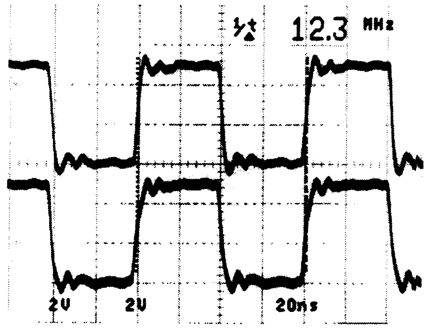

1 2 3 4 5

DA-119 (3/8)
BOARD SUFFIX : -121 3
MODEL DSR-80/80P

DA-119 (4/8): AUDIO ANALOG/DIGITAL IN/OUT PROCESS

DSR-80/80P

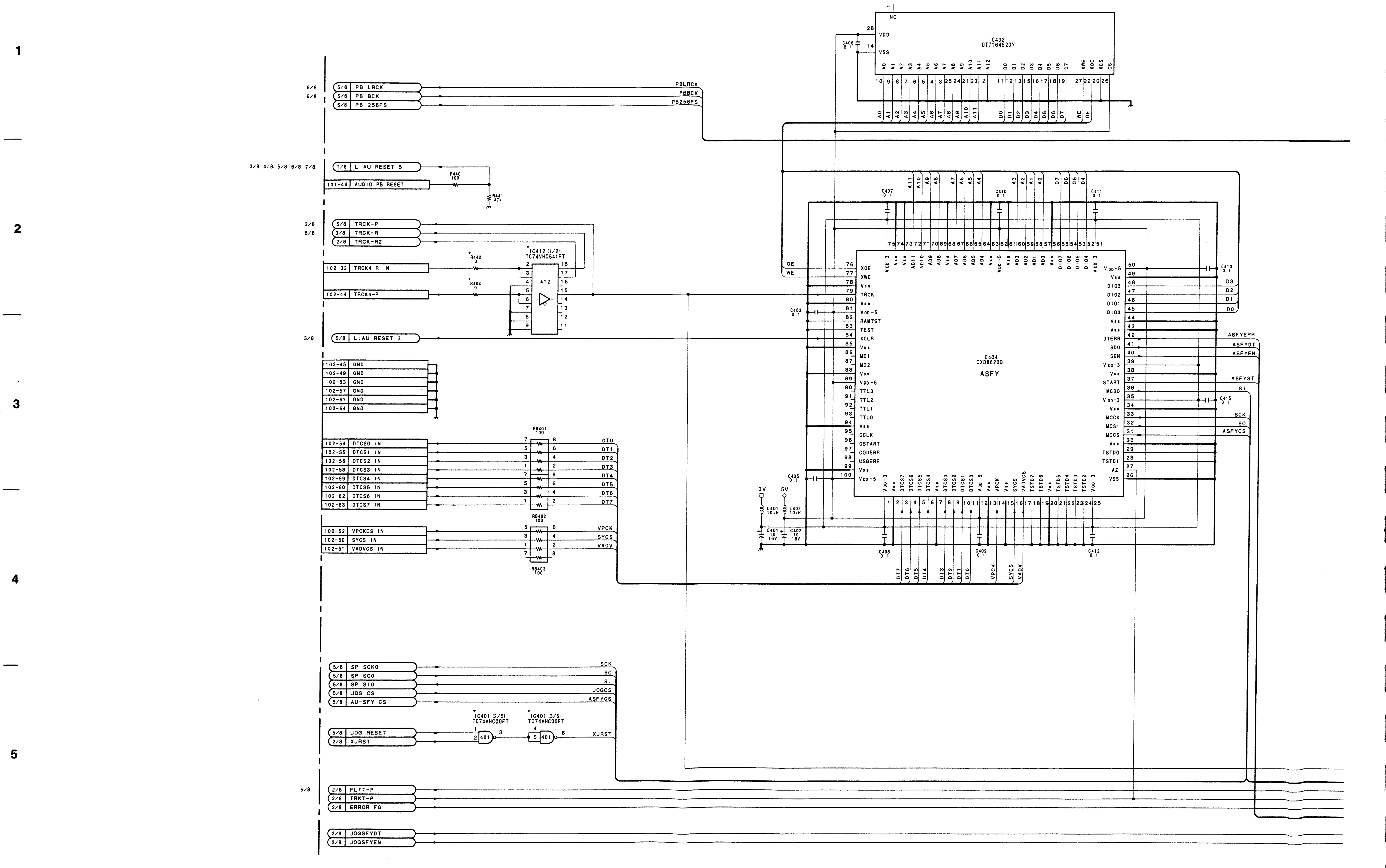

A | B | C | D | E | F | G | H

1 2 3 4 5

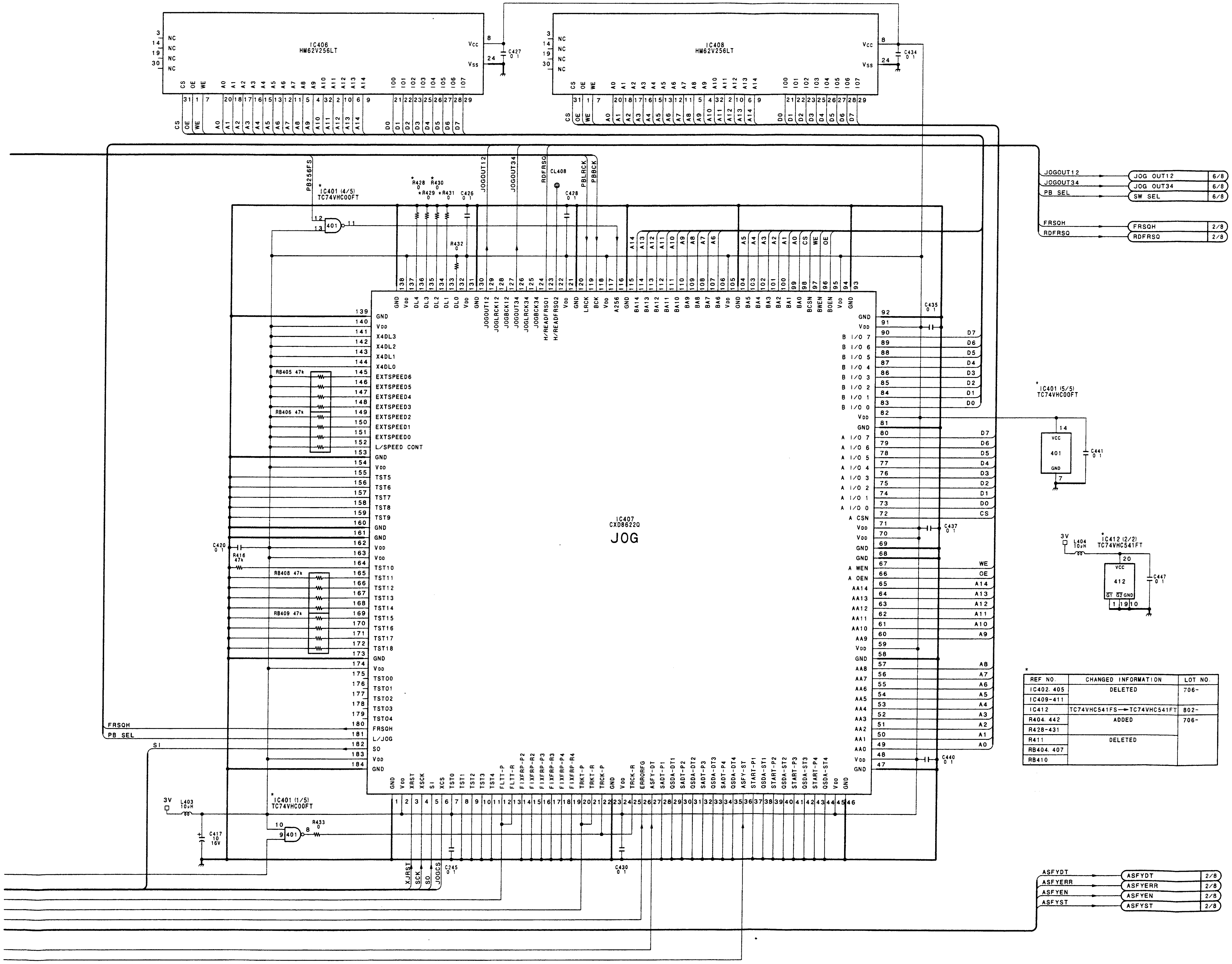

*

REF NO.	CHANGED INFORMATION	LOT NO.
IC402. 405	DELETED	706-
IC409-411		
IC412	TC74VHC541FS→TC74VHC541FT	802-
R404. 442	ADDED	706-
R428-431		
R411	DELETED	
RB404. 407		
RB410		

DA-119 (4/8)

BOARD SUFFIX : -12, 13
MODEL DSR-80/80P

DA-119 (5/8): AUDIO ANALOG/DIGITAL IN/OUT PROCESS

DSR-80/80P

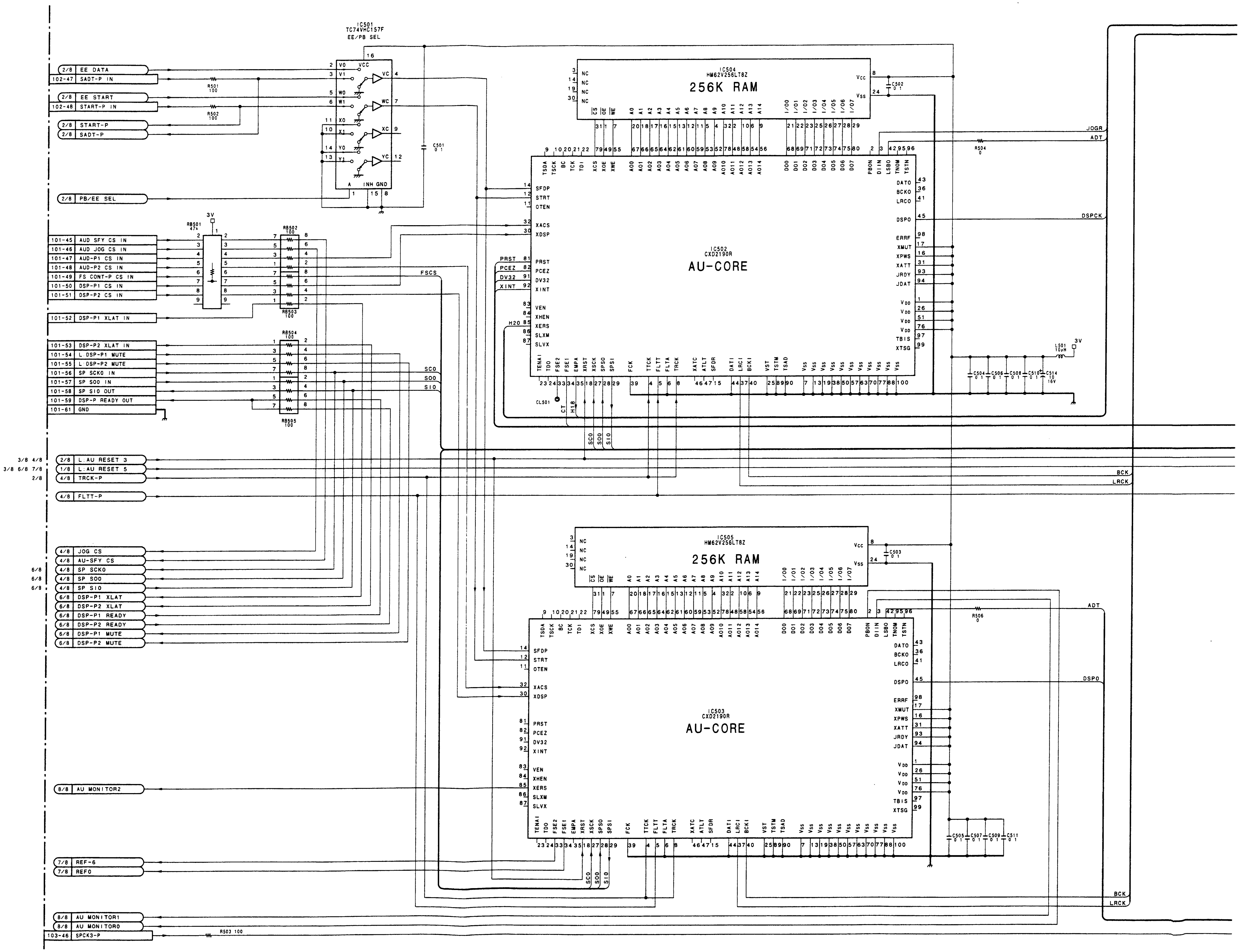

1
2
3
4
5

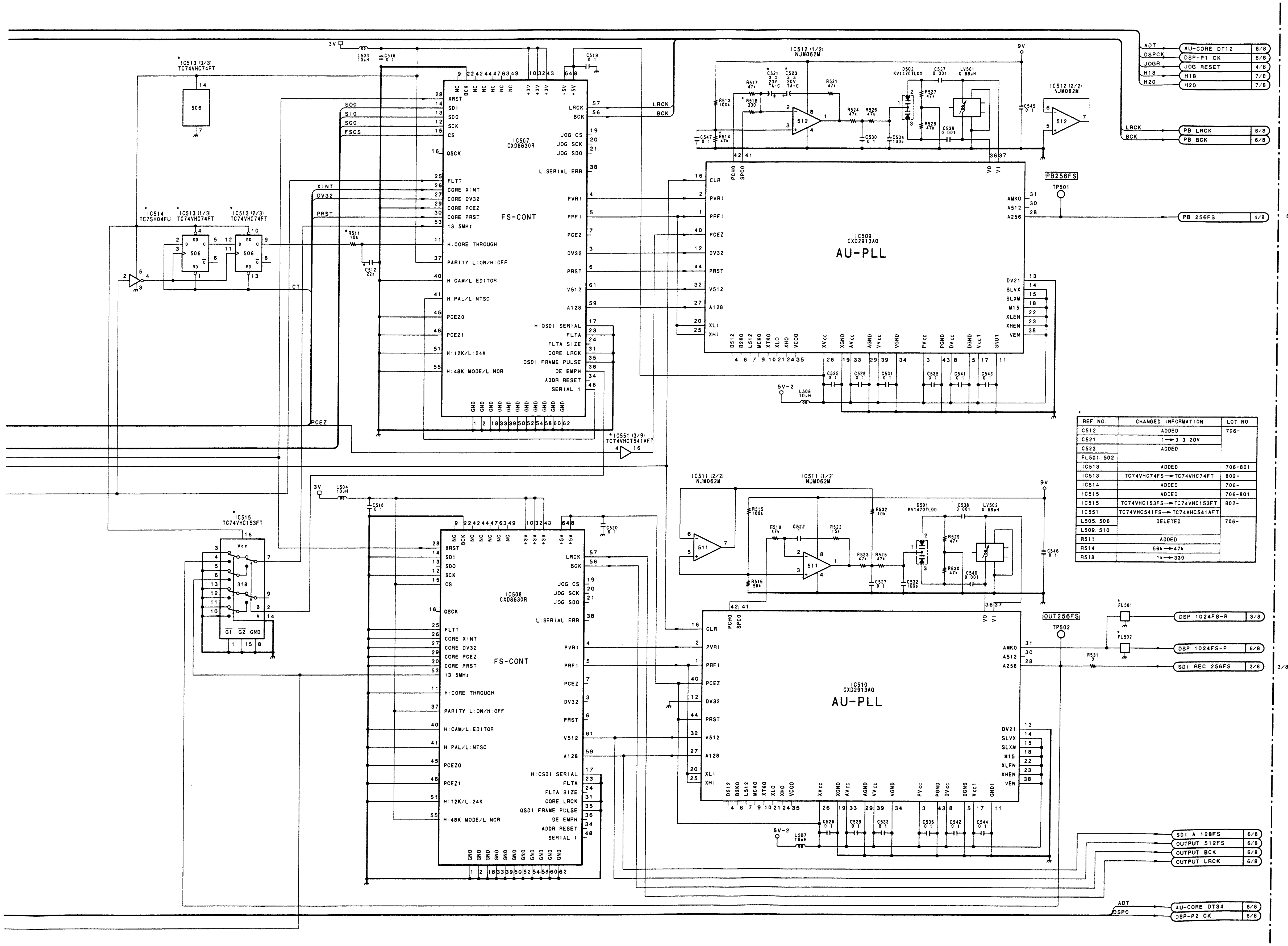

REF NO.	CHANGED INFORMATION	LOT NO.
C512	ADDED	706-
C521	1 → 3.3 20V	
C523	ADDED	
FL501, 502		
IC513	ADDED	706-801
IC513	TC74VHC74FS → TC74VHC74FT	802-
IC514	ADDED	706-
IC515	ADDED	706-801
IC515	TC74VHC153FS → TC74VHC153FT	802-
IC551	TC74VHC541FS → TC74VHC541AFT	
L505, 506	DELETED	706-
L509, 510		
R511	ADDED	
R514	56k → 47k	
R518	1k → 330	

DA-119 (5/8)

BOARD SUFFIX : -12, 13
MODEL DSR-80/80P

DA-119 (6/8): AUDIO ANALOG/DIGITAL IN/OUT PROCESS

DA-119 (6/8)

① TP551 & TP553 Reference Level Input
② TP552 & TP554 Reference Level Input

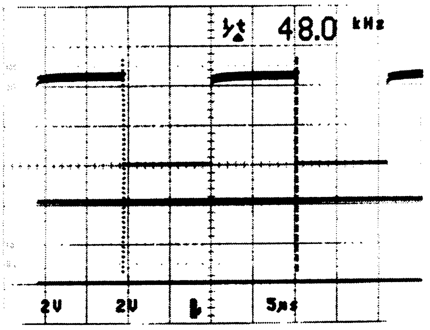

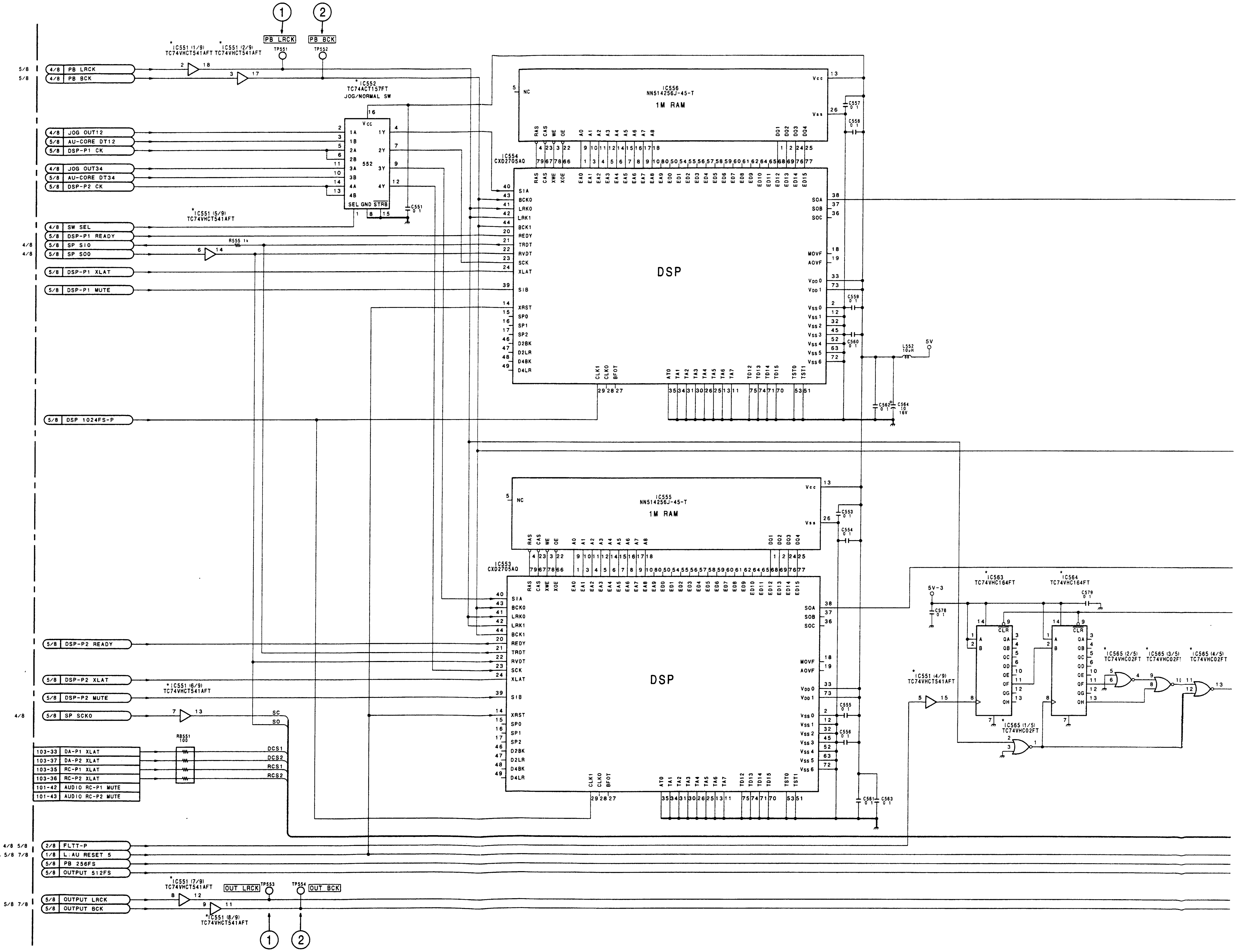

1

2

3

4

5

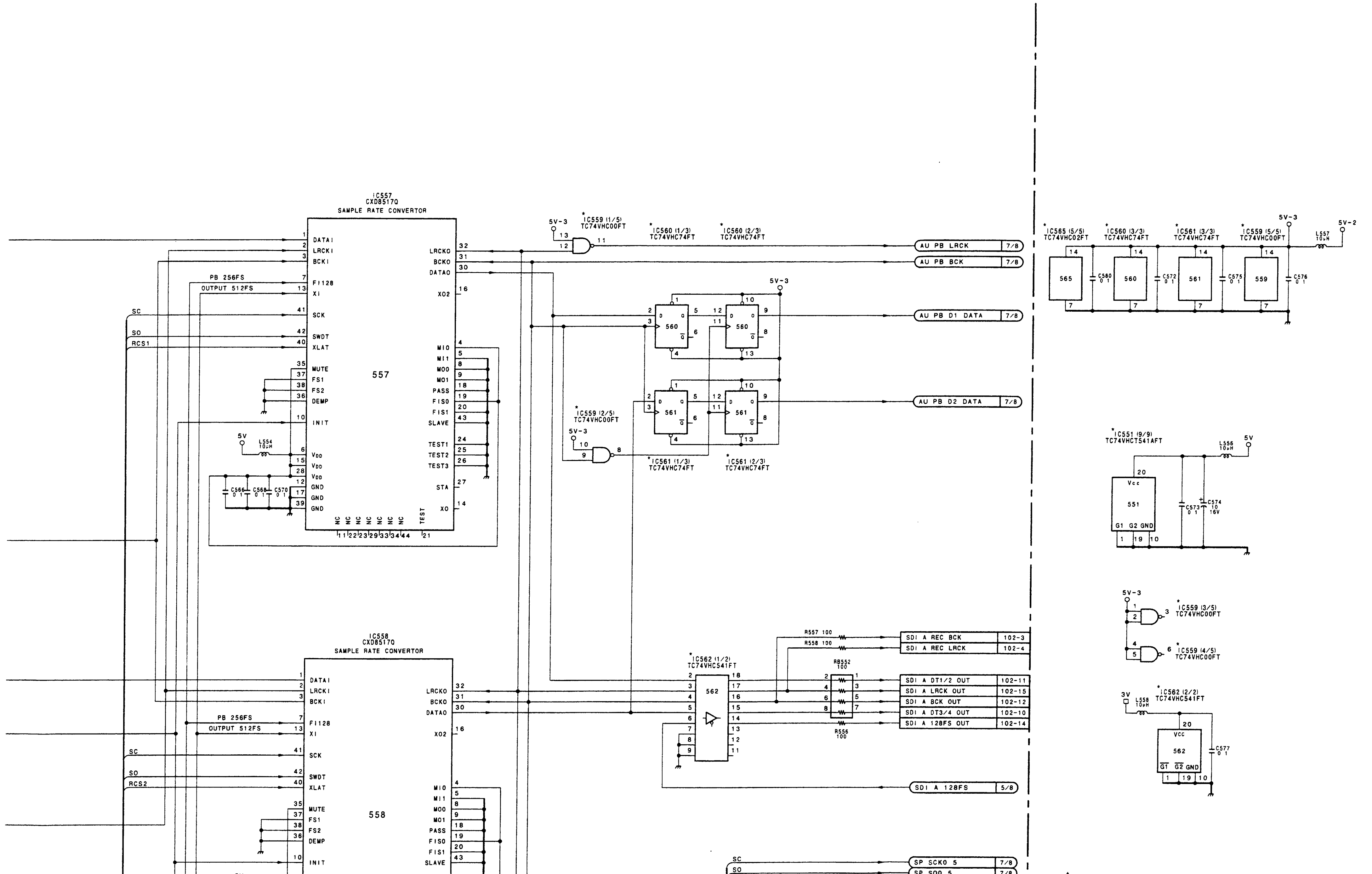

*

REF NO.	CHANGED INFORMATION	LOT NO.
IC551	TC74VHC541FS→TC74VHC541AFT	802-
IC552	TC74ACT157FS→TC74ACT157FT	
IC559	TC74VHC00FS→TC74VHC00FT	
IC560, 561	TC74VHC74FS→TC74VHC74FT	
IC562	TC74VHC541FS→TC74VHC541FT	
IC563, 564	ADDED	706-801
IC563, 564	TC74VHC164FS→TC74VHC164FT	802-
IC564	ADDED	706-
IC565	TC74VHC02FS→TC74VHC02FT	802-
L551	DELETED	706-

DA-119 (6/8)
BOARD SUFFIX : -12, 13
MODEL DSR-80/80P

DA-119 (7/8): AUDIO ANALOG/DIGITAL IN/OUT PROCESS

DSR-80/80P

1

2

3

4

5

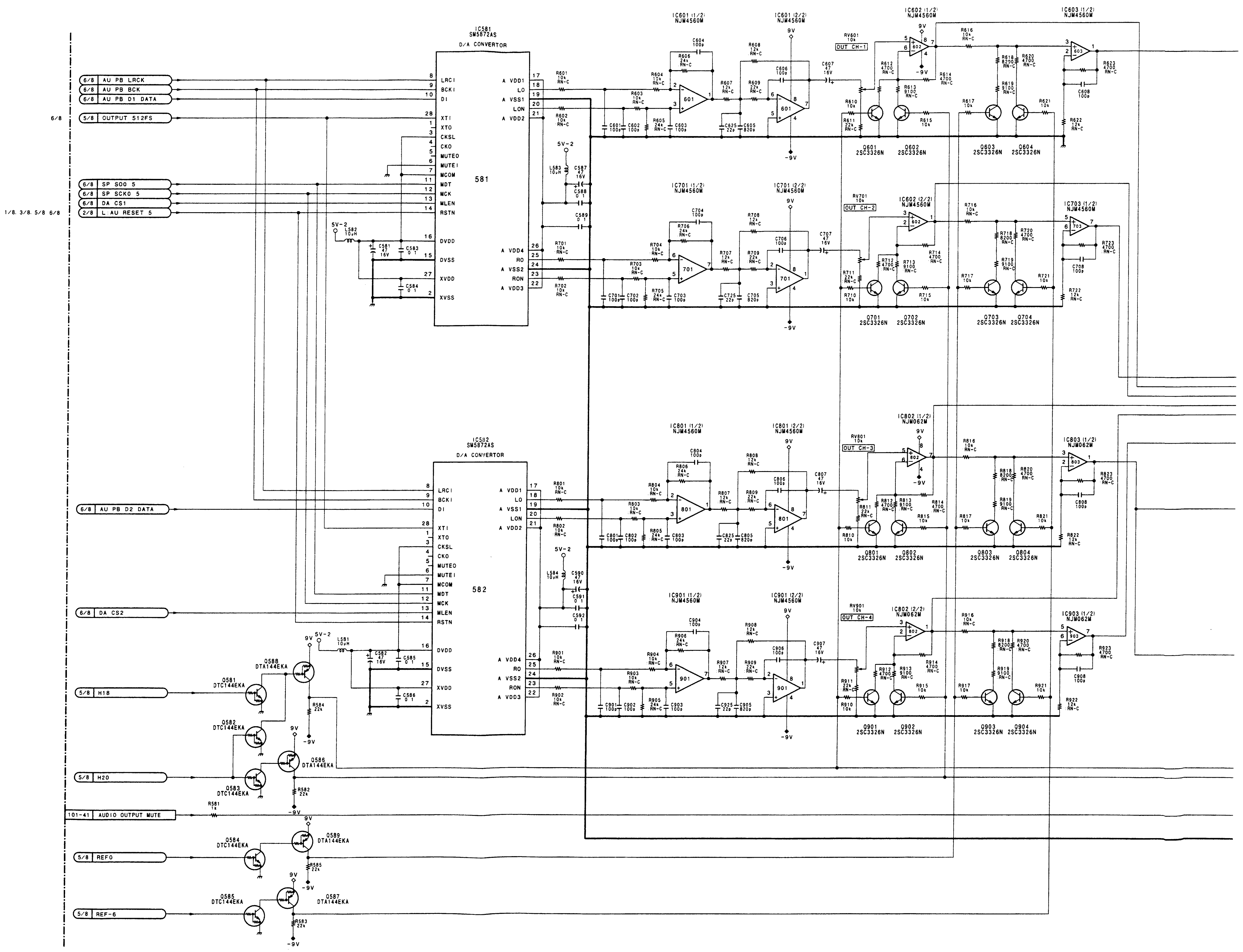

A | B | C | D | E | F | G | H

SONY-SP0754 / DRUCK 150

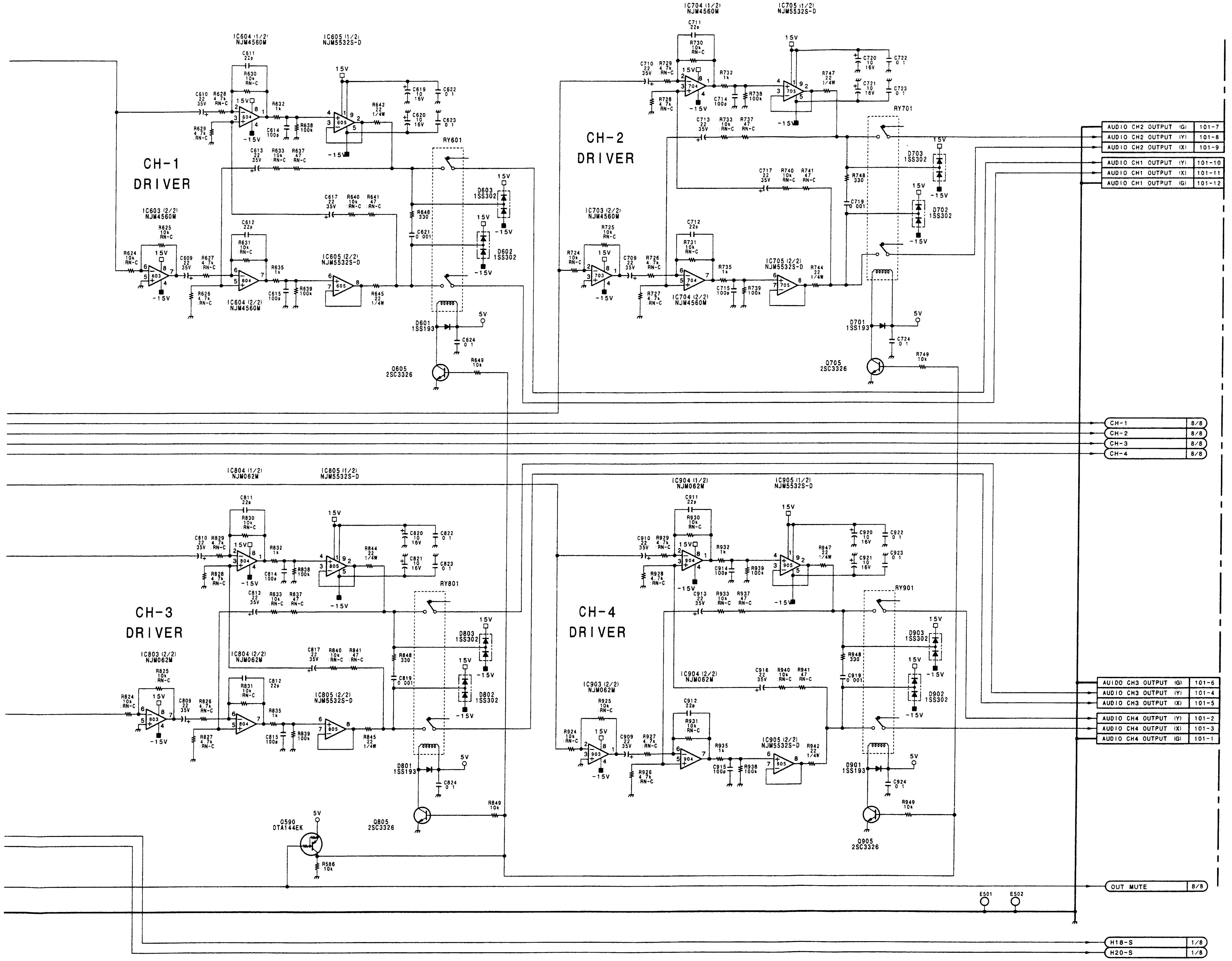

1

2

3

4

5

DA-119 (7/8)

BOARD SUFFIX : -12, 13
MODEL DSR-80/80P

DA-119 (8/8): AUDIO ANALOG/DIGITAL IN/OUT PROCESS

DSR-80/80P

1

—

2

—

3

—

4

—

5

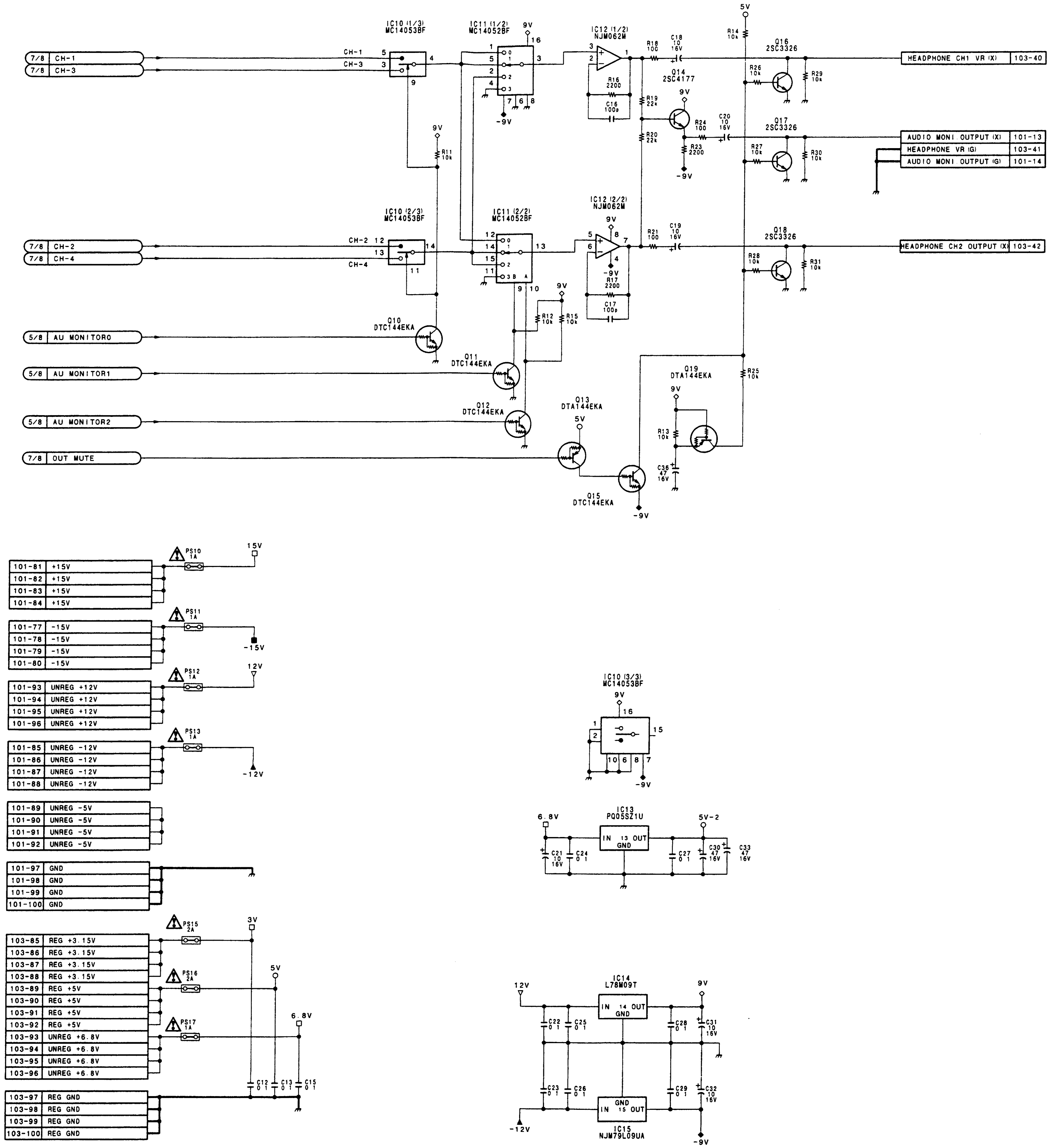

A | B | C | D | E | F | G | H

SONY-SP0754 / DRUCK 152

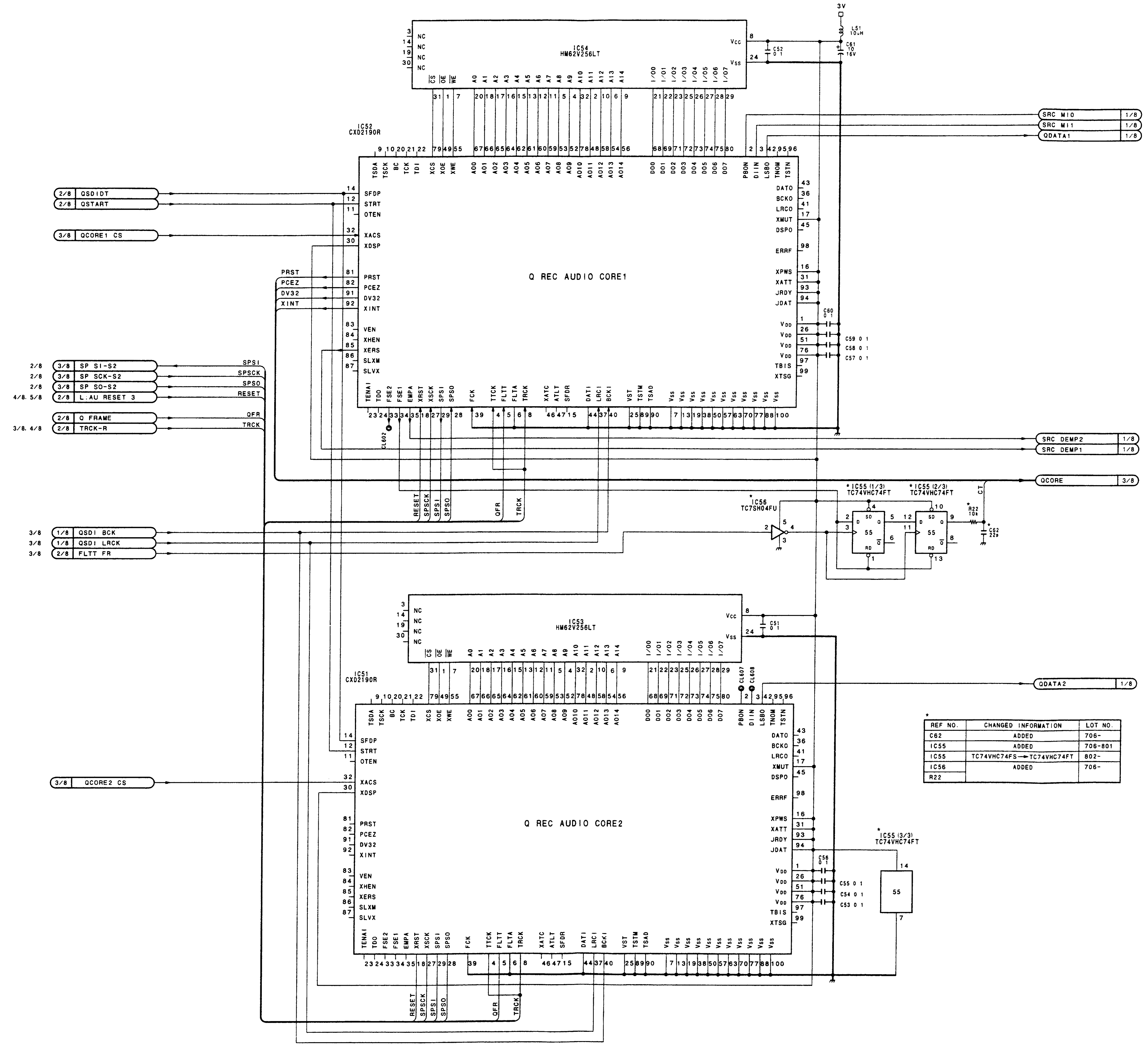

*

REF NO.	CHANGED INFORMATION	LOT NO.
C62	ADDED	706-
IC55	ADDED	706-801
IC55	TC74VHC74FS→TC74VHC74FT	802-
IC56	ADDED	706-
R22		

1
2
3
4
5

DA-119 (8/8)

BOARD SUFFIX : -12, 13
MODEL DSR-80/80P

DA-119 (1/8): AUDIO ANALOG/DIGITAL IN/OUT PROCESS

1

DA-119 (1/8)

① TP101~TP-104 Reference Level Input

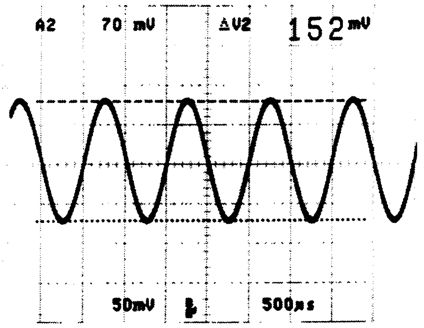

2

① TP101~104 Reference Level Input

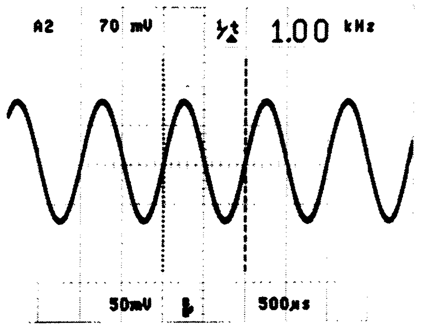

3

4

5

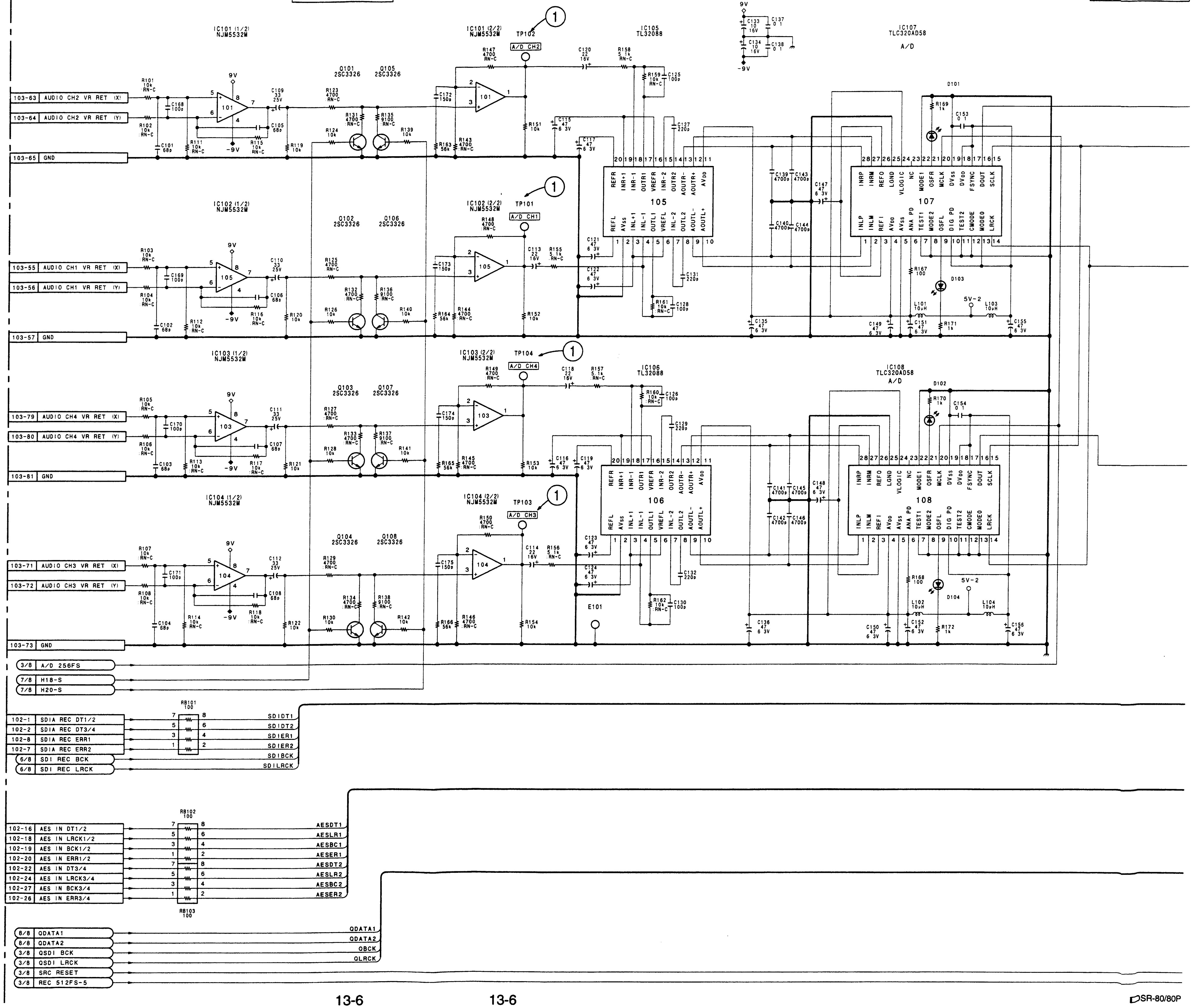

DSR-80/80P

DSR-80/80P

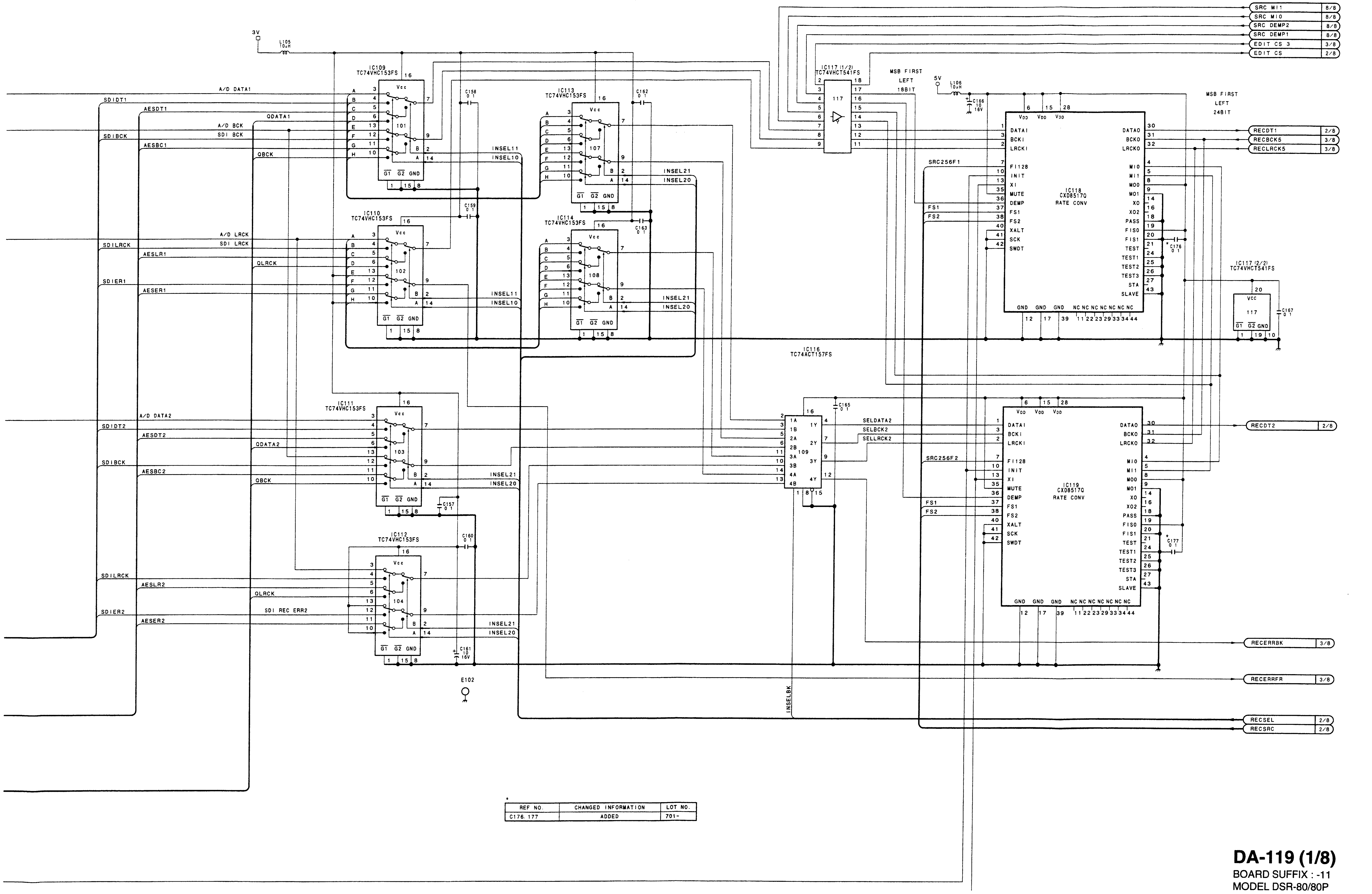

*

REF NO.	CHANGED INFORMATION	LOT NO.
C176, 177	ADDED	701-

DA-119 (1/8)

BOARD SUFFIX : -11
MODEL DSR-80/80P

DA-119 (2/8): AUDIO ANALOG/DIGITAL IN/OUT PROCESS

DSR-80/80P

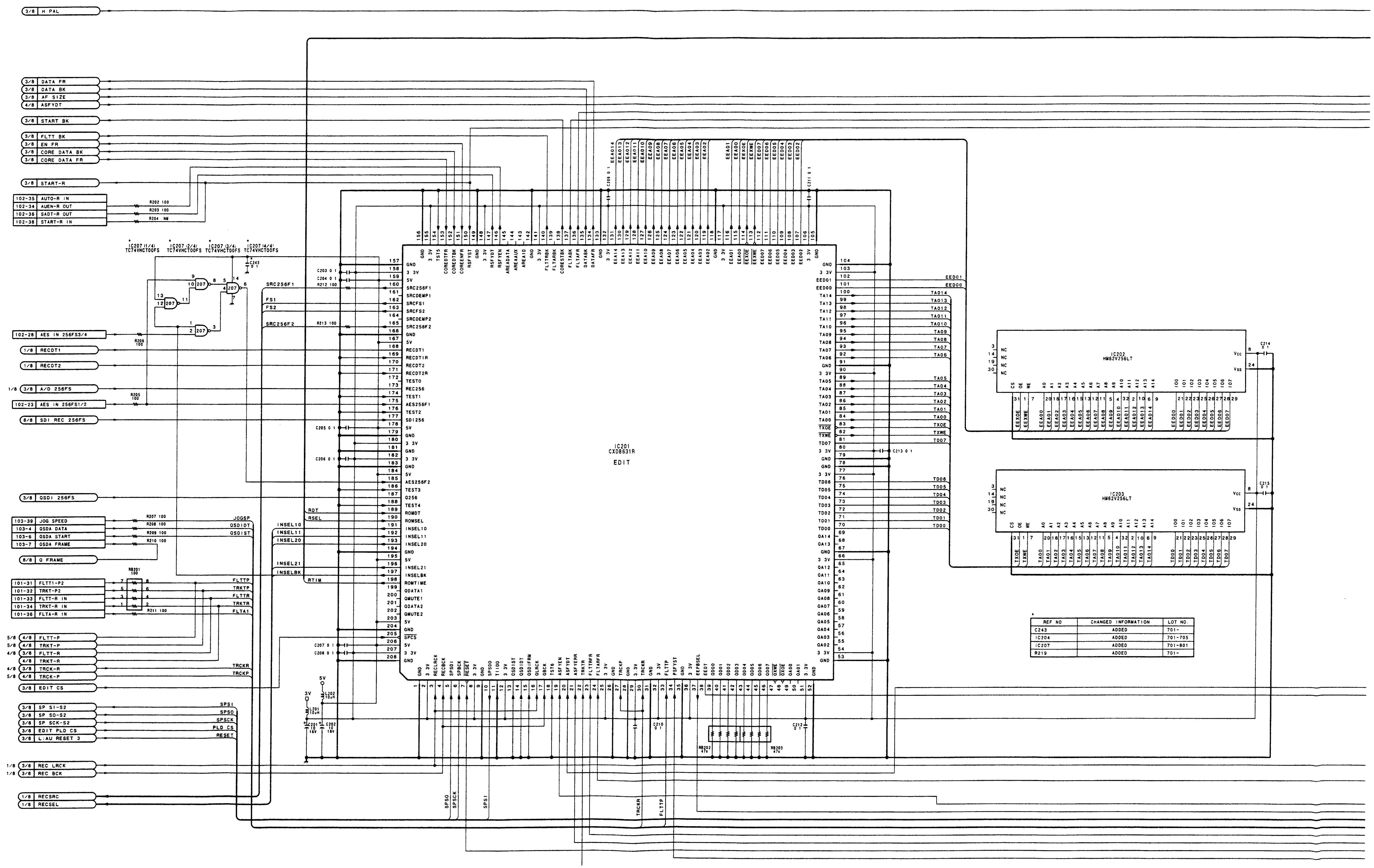

*

REF NO	CHANGED INFORMATION	LOT NO.
C243	ADDED	701-
IC204	ADDED	701-705
IC207	ADDED	701-801
R219	ADDED	701-

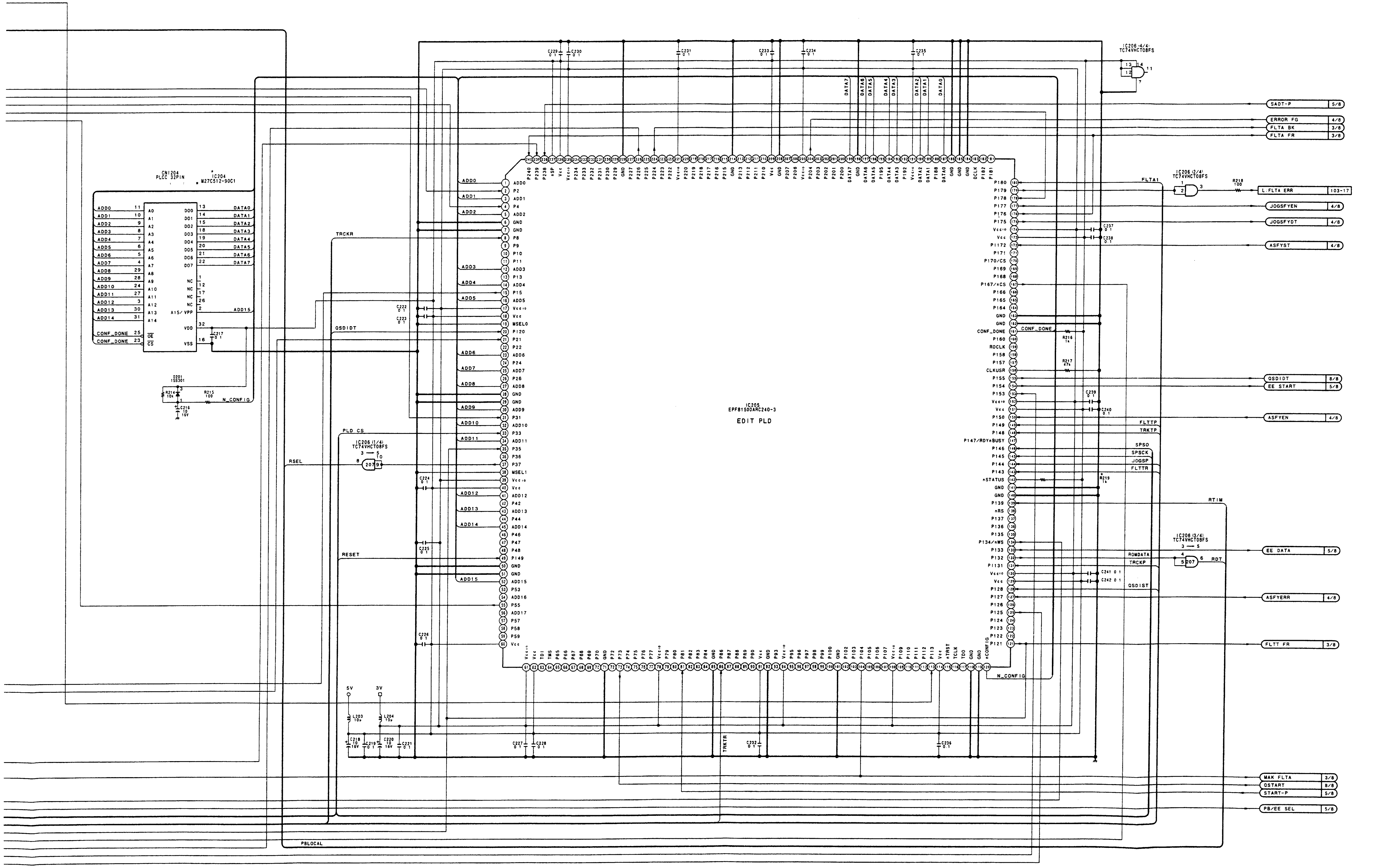

1

2

3

4

5

DA-119 (2/8)
BOARD SUFFIX : -11
MODEL DSR-80/80P

DA-119 (3/8): AUDIO ANALOG/DIGITAL IN/OUT PROCESS

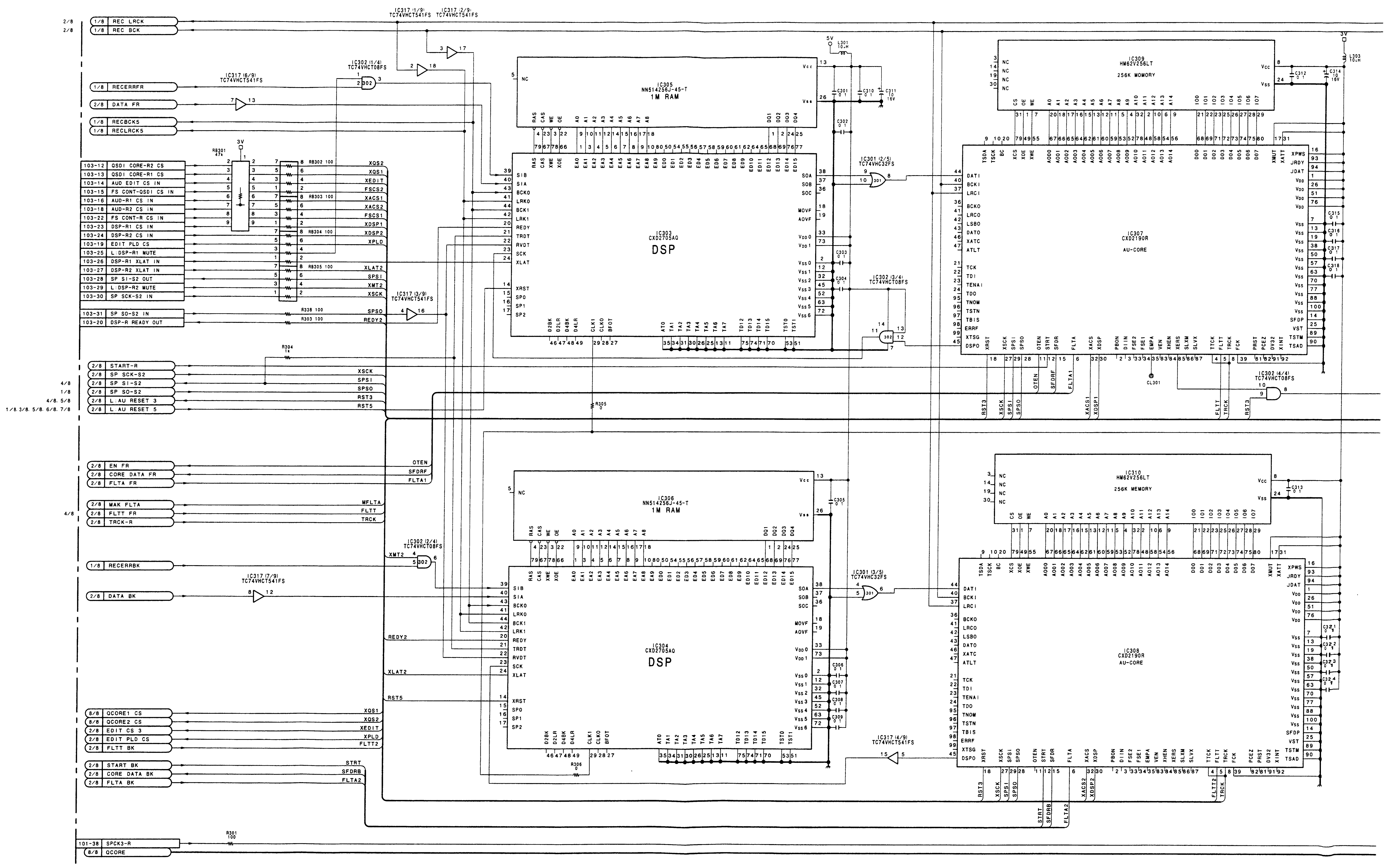

A | B | C | D | E | F | G | H

DSR-80/80P

DSR-80/80P

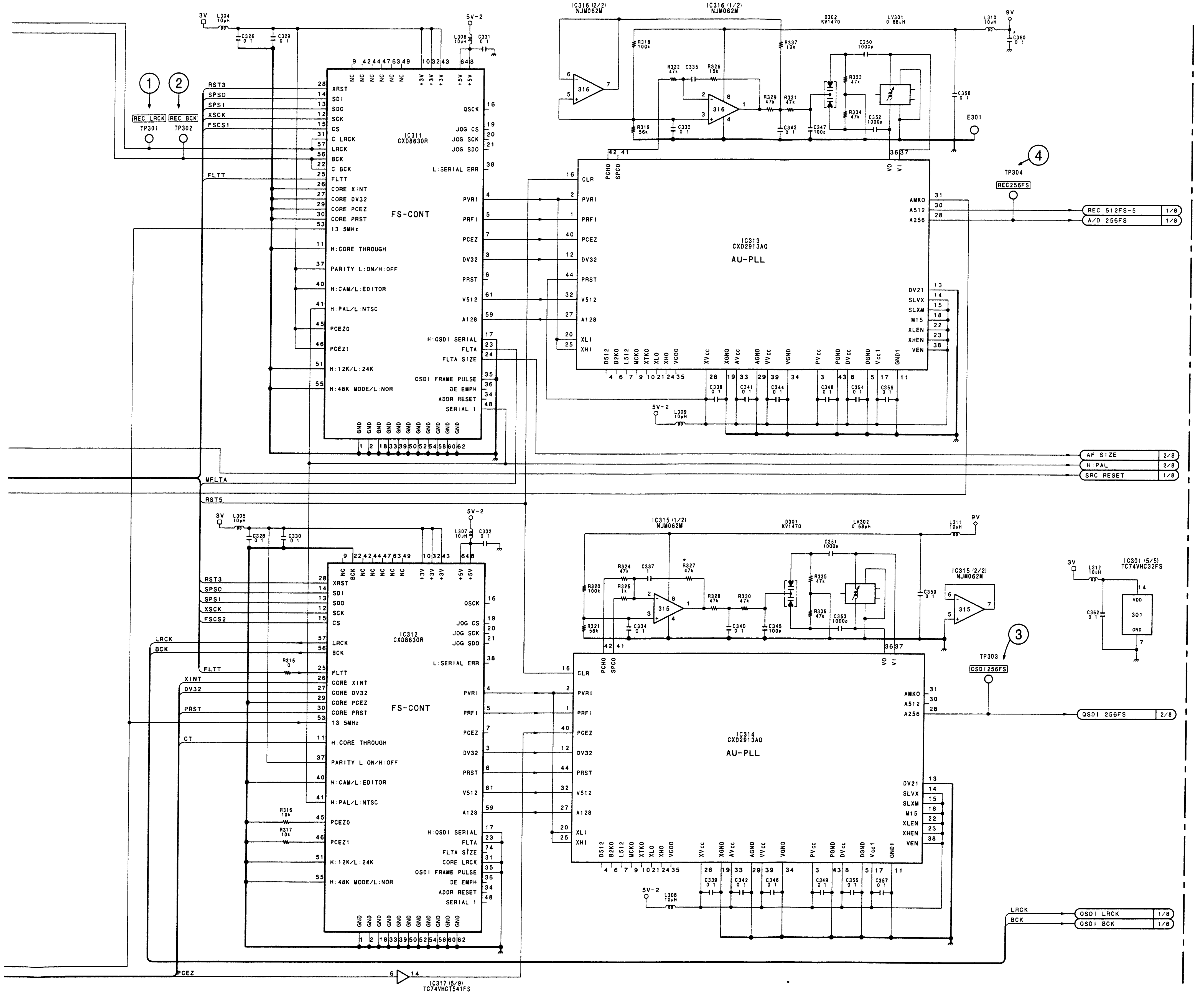

DA-119 (3/8)

① TP301 Reference Level Input

② TP302 Reference Level Input

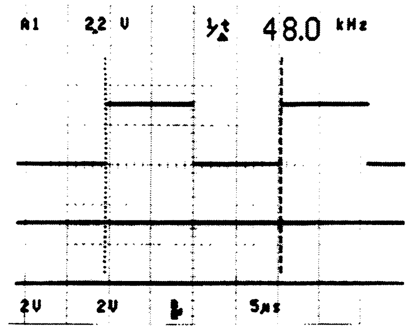

REF NO.	CHANGED INFORMATION	LOT NO.
C360	ADDED	701-
R327	15k → 47k	

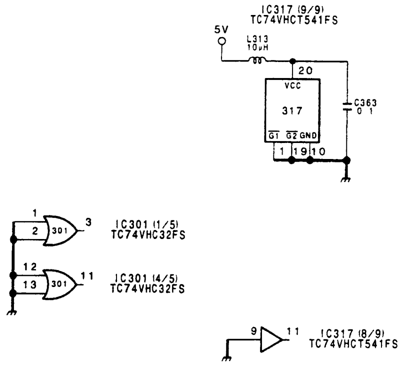

③ TP303 Reference Level Input

④ TP304 Reference Level Input

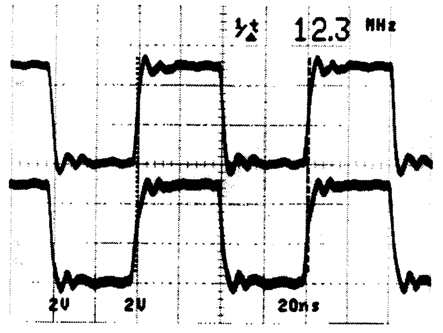

1 2 3 4 5

DA-119 (3/8)

BOARD SUFFIX : -11

MODEL DSR-80/80P

DA-119 (4/8): AUDIO ANALOG/DIGITAL IN/OUT PROCESS

DSR-80/80P

1

2

3

4

5

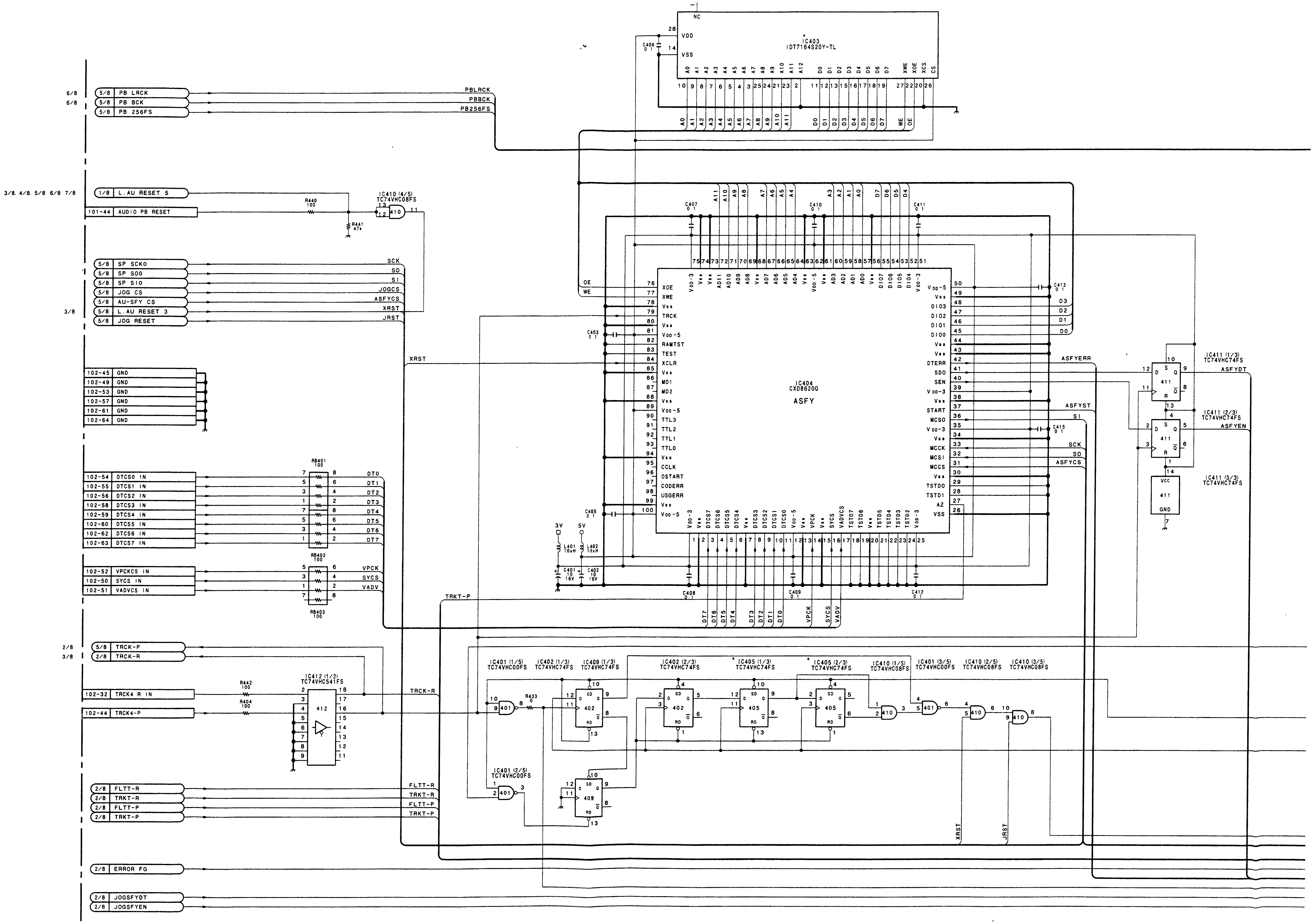

A | B | C | D | E | F | G | H

SONY-SP0754 / DRUCK 160

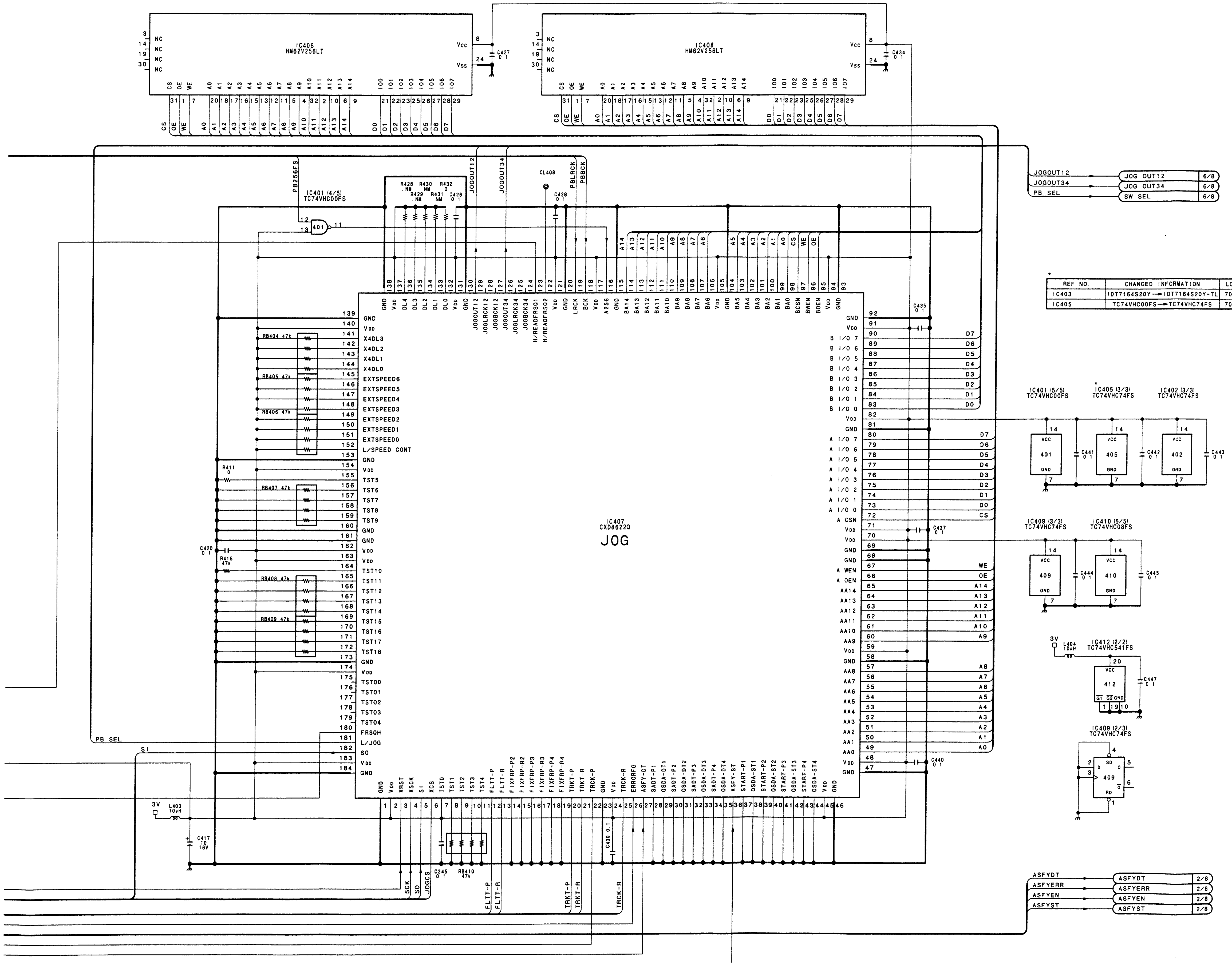

*

REF NO.	CHANGED INFORMATION	LOT NO.
IC403	IDT7164S20Y → IDT7164S20Y-TL	701-
IC405	TC74VHC00FS → TC74VHC74FS	701-705

1

2

3

4

5

DA-119 (4/8)

BOARD SUFFIX : -11
MODEL DSR-80/80P

DA-119 (5/8): AUDIO ANALOG/DIGITAL IN/OUT PROCESS

DSR-80/80P

DSR-80/80P

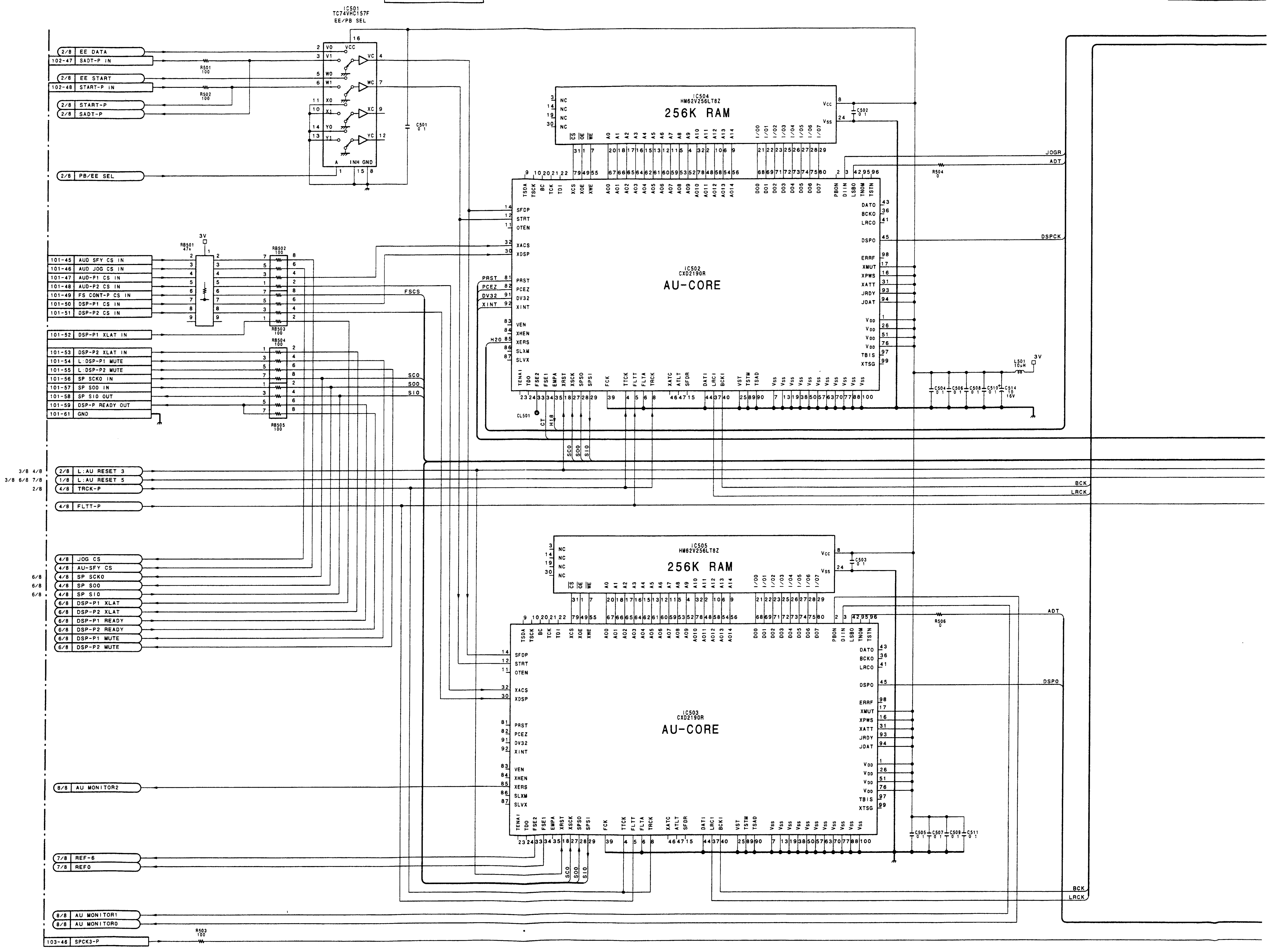

DSR-80/80P

A B C D E F G H

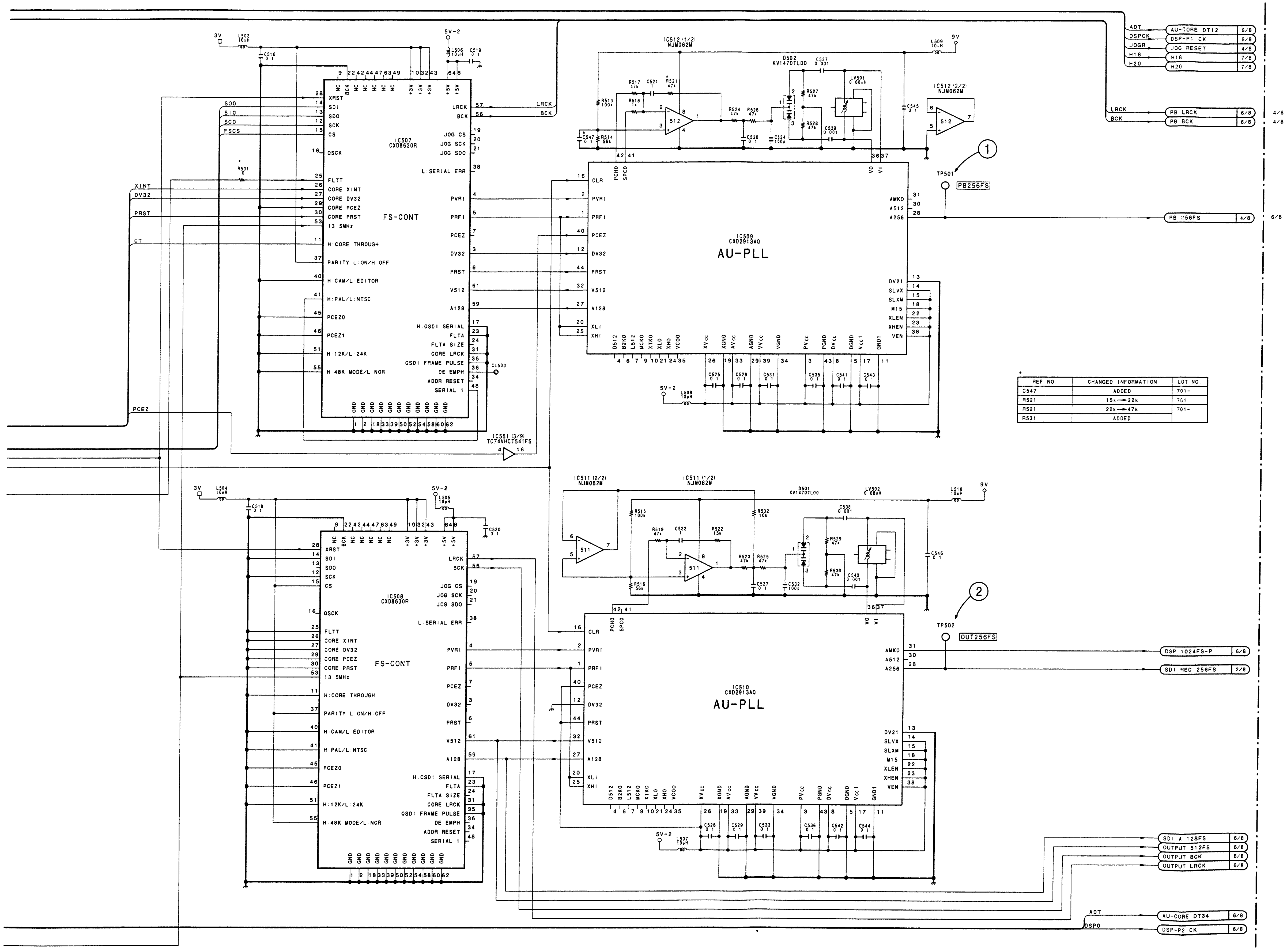

★

REF NO.	CHANGED INFORMATION	LOT NO.
C547	ADDED	701-
R521	15k → 22k	701
R521	22k → 47k	701-
R531	ADDED	

1

2

3

4

5

DA-119 (5/8)

BOARD SUFFIX : -11

MODEL DSR-80/80P

DA-119 (6/8): AUDIO ANALOG/DIGITAL IN/OUT PROCESS

DSR-80/80P

1

DA-119 (6/8)

① TP551 & TP553 Reference Level Input
② TP552 & TP554 Reference Level Input

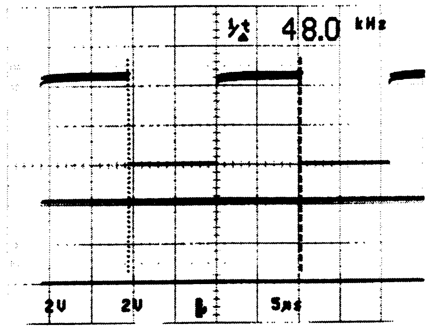

2

3

4

5

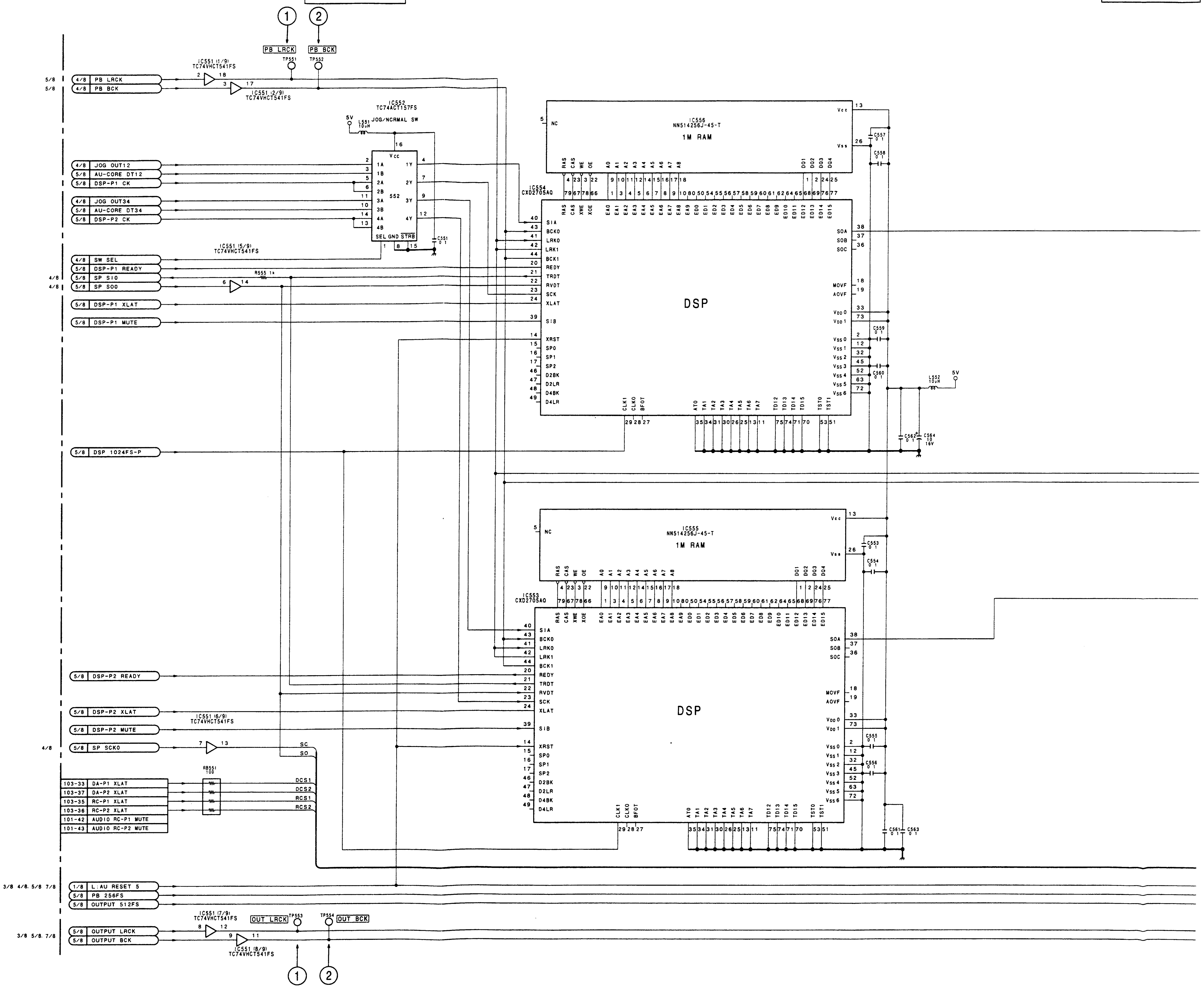

DSR-80/80P

A | B | C | D | E | F | G | H

SONY-SP0754 / DRUCK 164

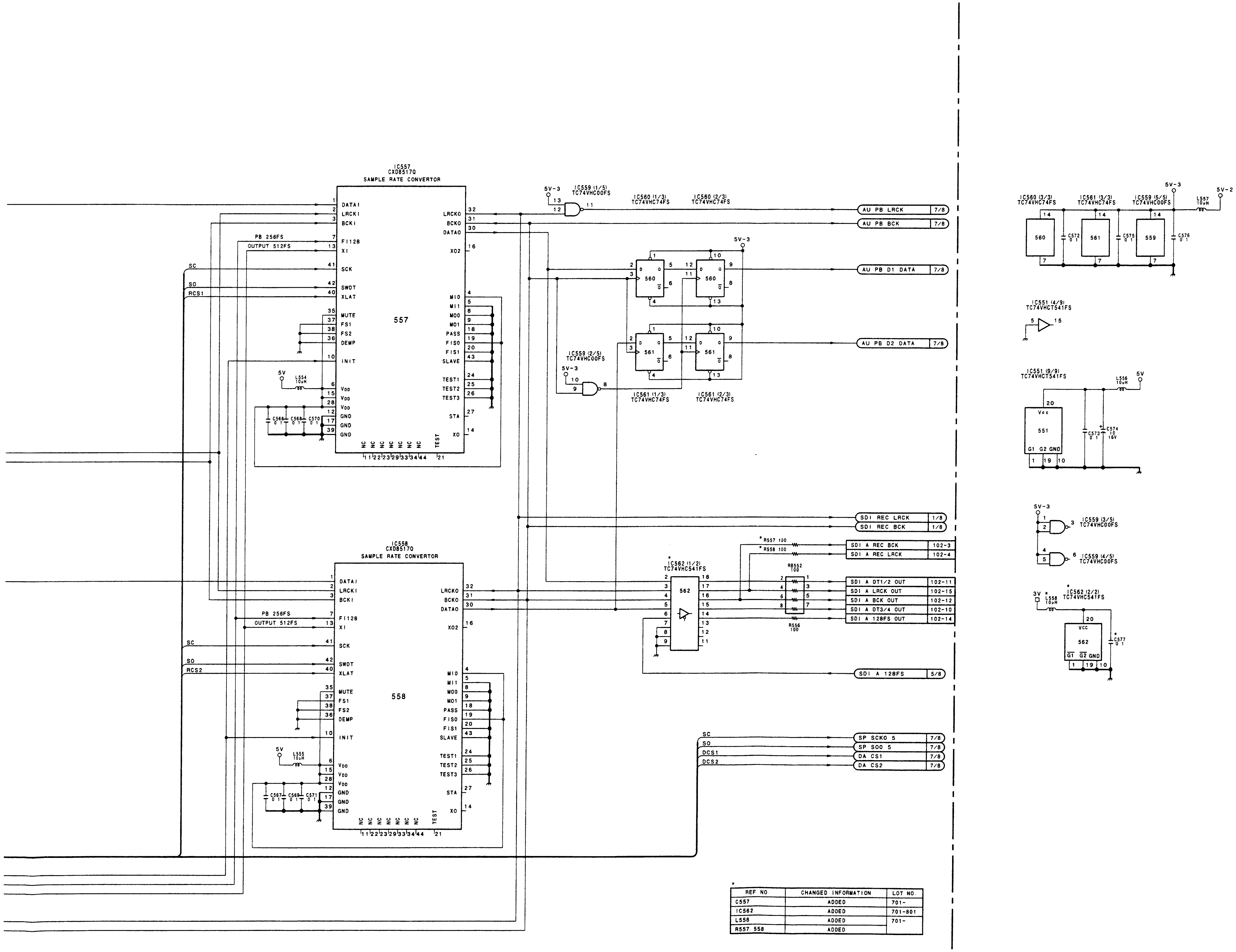

REF NO.	CHANGED INFORMATION	LOT NO.
C557	ADDED	701-
IC562	ADDED	701-801
L558	ADDED	701-
R557, 558	ADDED	

DA-119 (6/8)

BOARD SUFFIX : -11
MODEL DSR-80/80P

DA-119 (7/8): AUDIO ANALOG/DIGITAL IN/OUT PROCESS

DSR-80/80P

DSR-80/80P

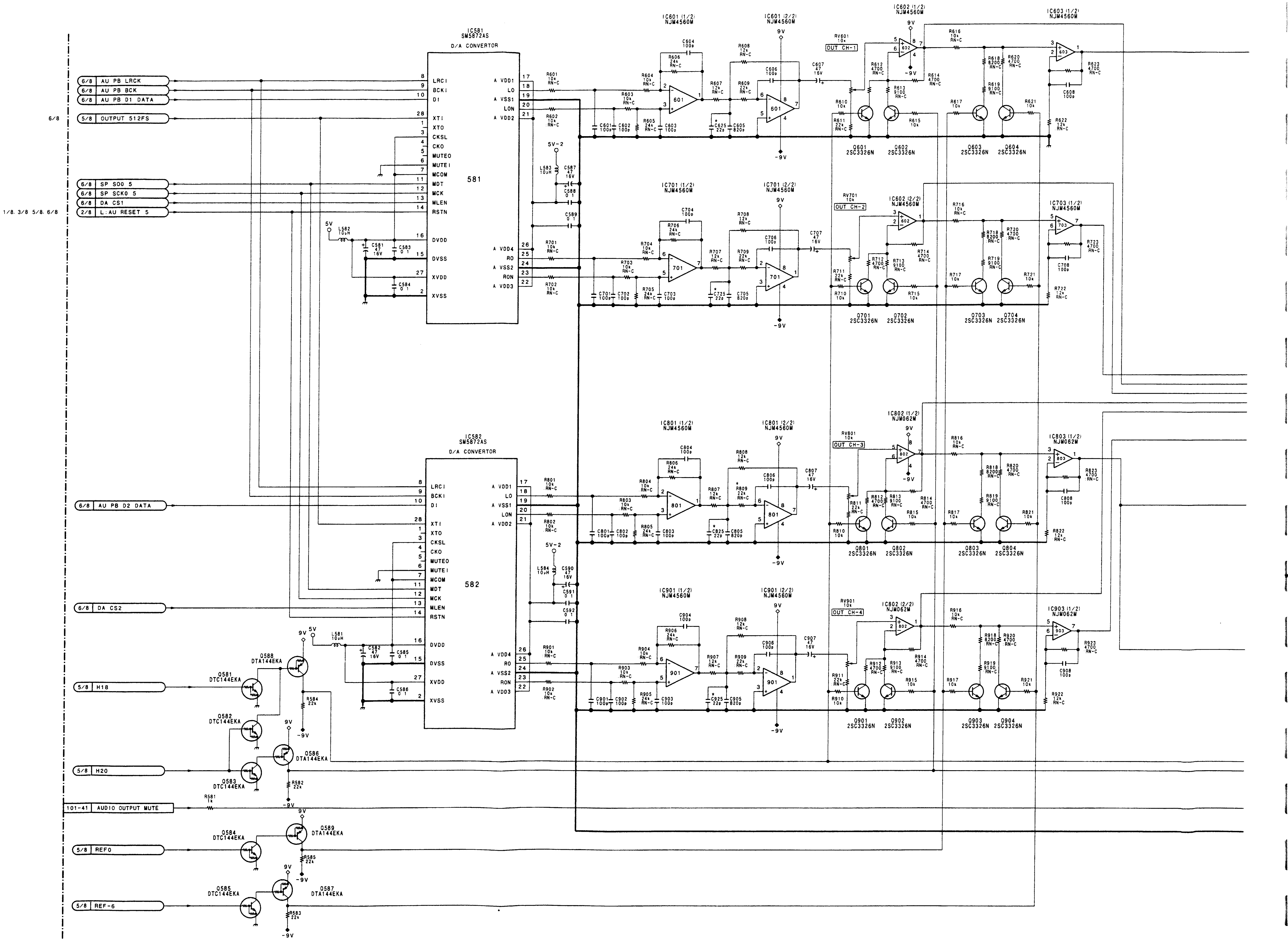

DSR-80/80P

A B C D E F G H

1 2 3 4 5

SONY-SP0754 / DRUCK 166

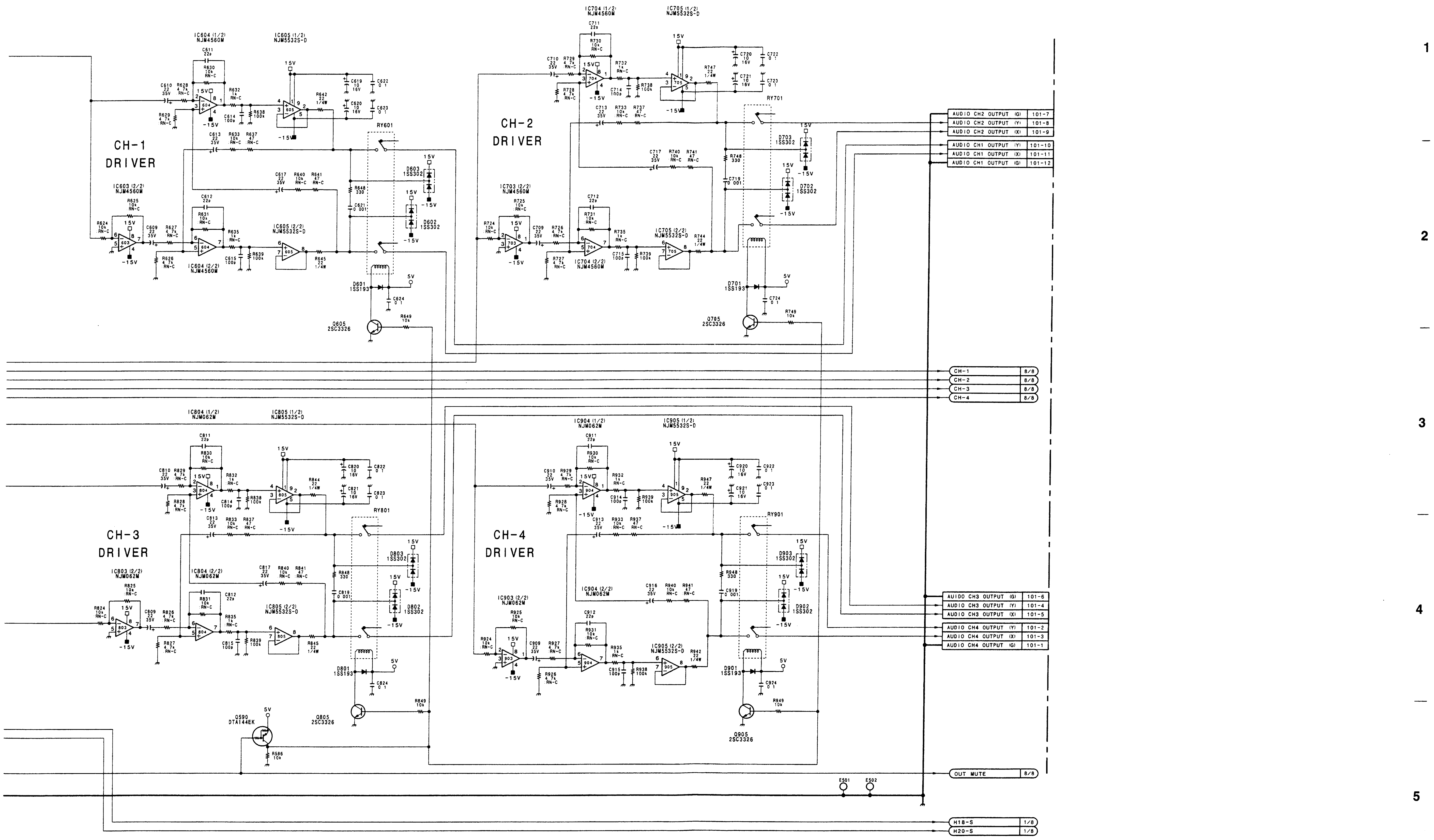

*

REF NO.	CHANGED INFORMATION	LOT NO.
C625, 725, 825, 925	ADDED	701-
R809	12k → 22k	

DA-119 (7/8)
BOARD SUFFIX : -11
MODEL DSR-80/80P

DA-119 (8/8): AUDIO ANALOG/DIGITAL IN/OUT PROCESS

DSR-80/80P

1

2

3

4

5

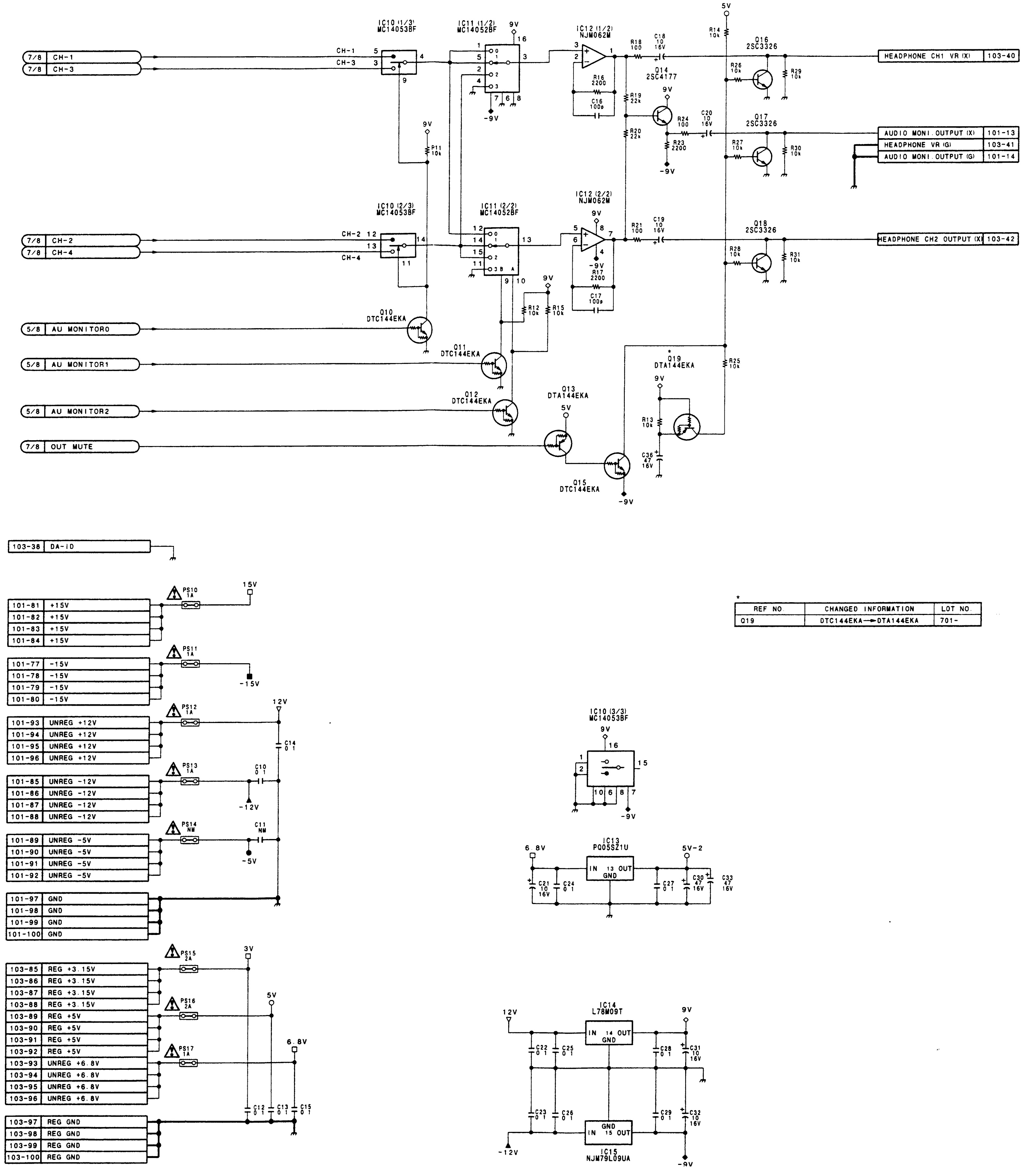

*

REF NO.	CHANGED INFORMATION	LOT NO.
Q19	DTC144EKA → DTA144EKA	701-

A | B | C | D | E | F | G | H

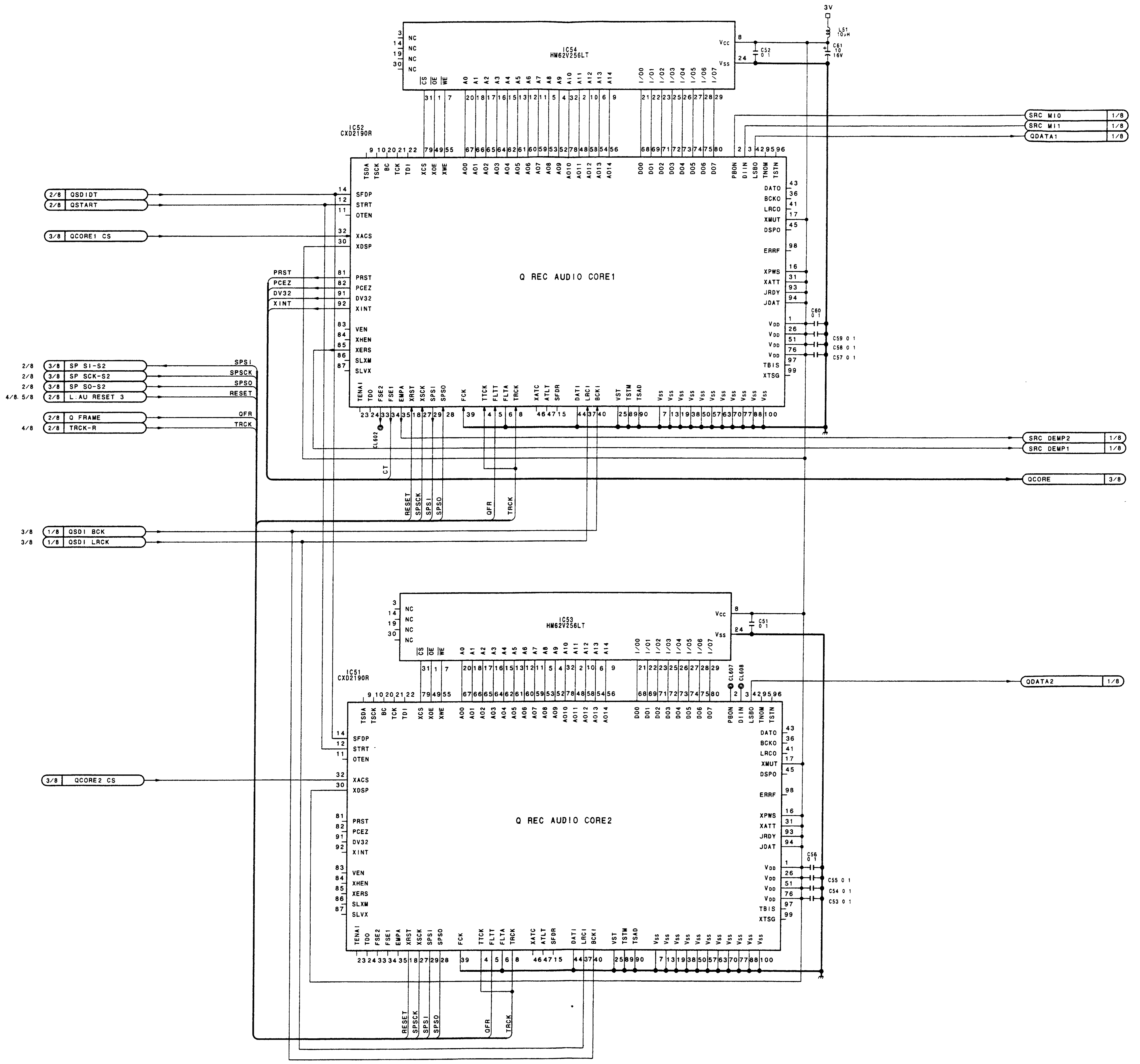

DA-119 (8/8)
BOARD SUFFIX : -11
MODEL DSR-80/80P

DV-15/15A (1/11): VIDEO DIGITAL IN/OUT PROCESS

DSR-80/80P

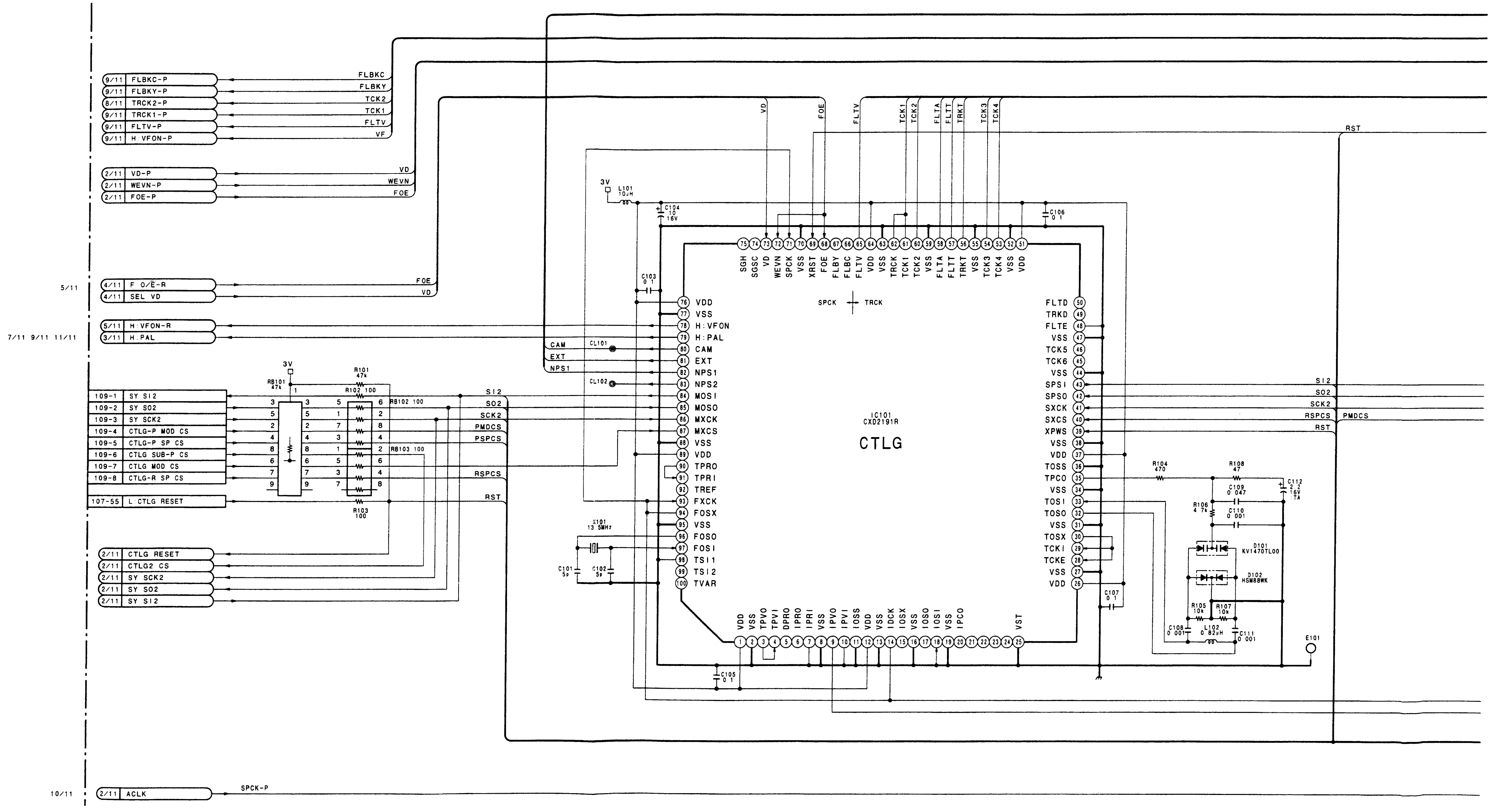

DV-15/15A (1/11)

DSR-80/80P

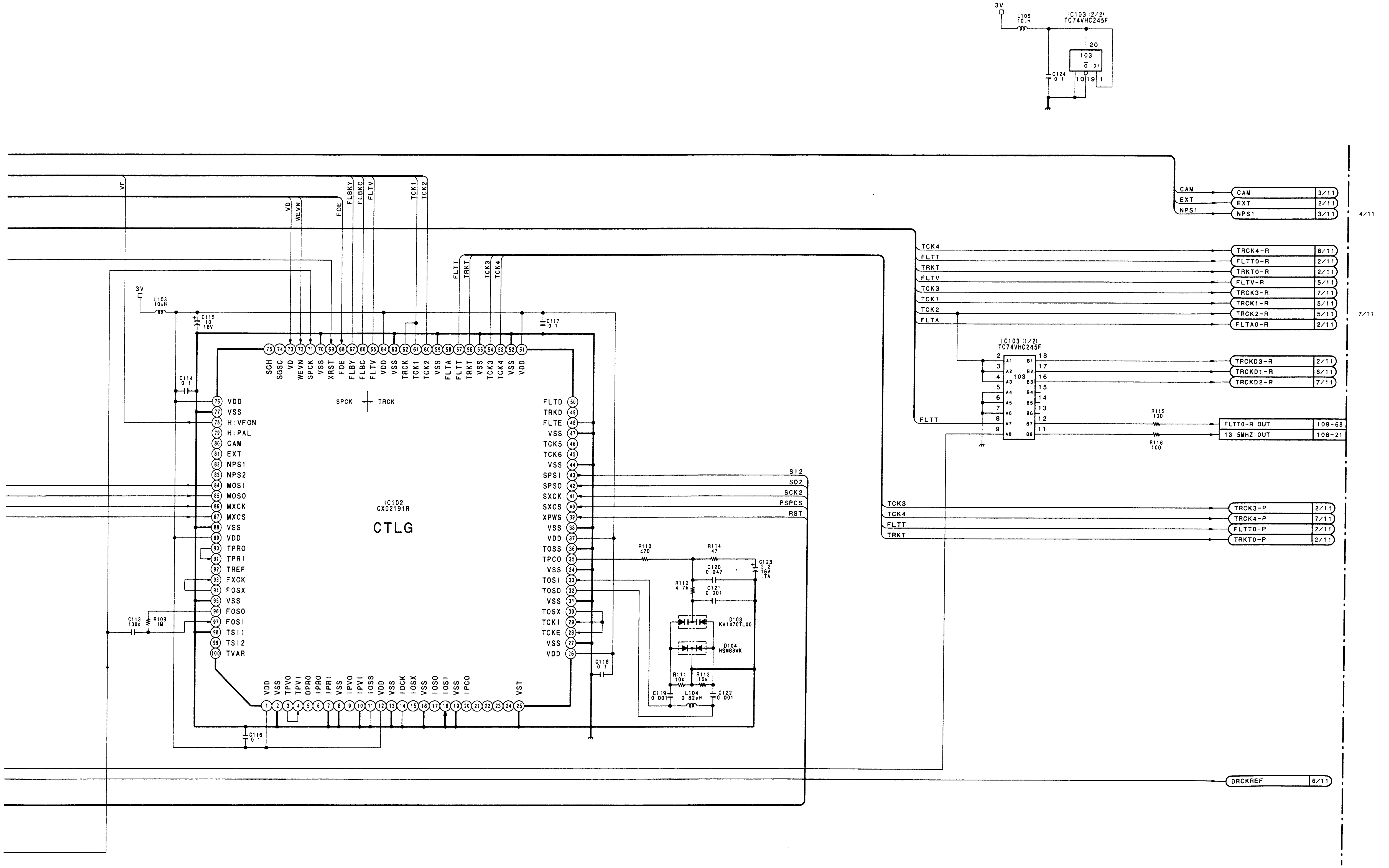

1
2
3
4
5

DV-15/15A (1/11)

BOARD SUFFIX : -14
MODEL DSR-80/80P

13-23 (b)

I | J | K | L | M | N | O | P

DSR-80/80P

DV-15/15A: VIDEO DIGITAL IN/OUT PROCESS

DV-15 (3/11)

① TP201 MODE: 75% Color Bar/REC • EE (NTSC)
MODE: 100% Color Bar/REC • EE (PAL)

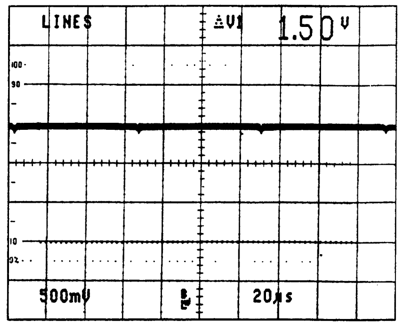

DV-15 (4/11)

① TP251 MODE: 75% Color Bar/REC • EE (NTSC)

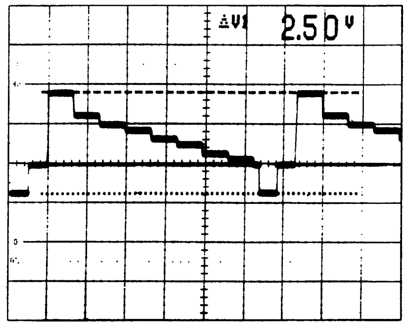

② TP252 MODE: 75% Color Bar/REC • EE (NTSC)
MODE: 100% Color Bar/REC • EE (PAL)

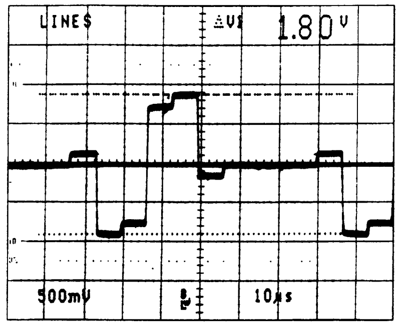

① TP251 MODE: 100% Color Bar/REC • EE (PAL)

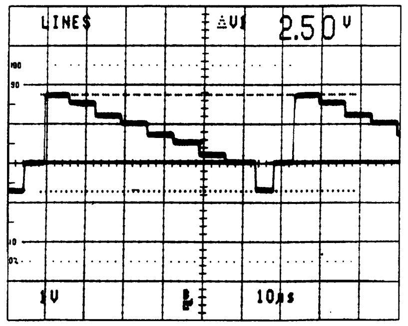

③ TP253 MODE: 75% Color Bar/REC • EE (NTSC)
MODE: 100% Color Bar/REC • EE (PAL)

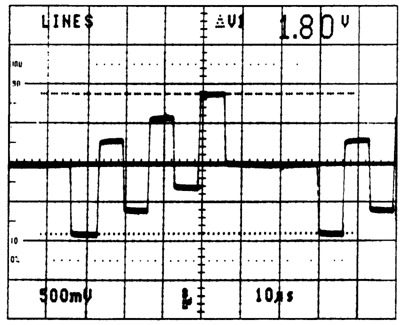

DV-15/15A (2/11): VIDEO DIGITAL IN/OUT PROCESS

DSR-80/80P

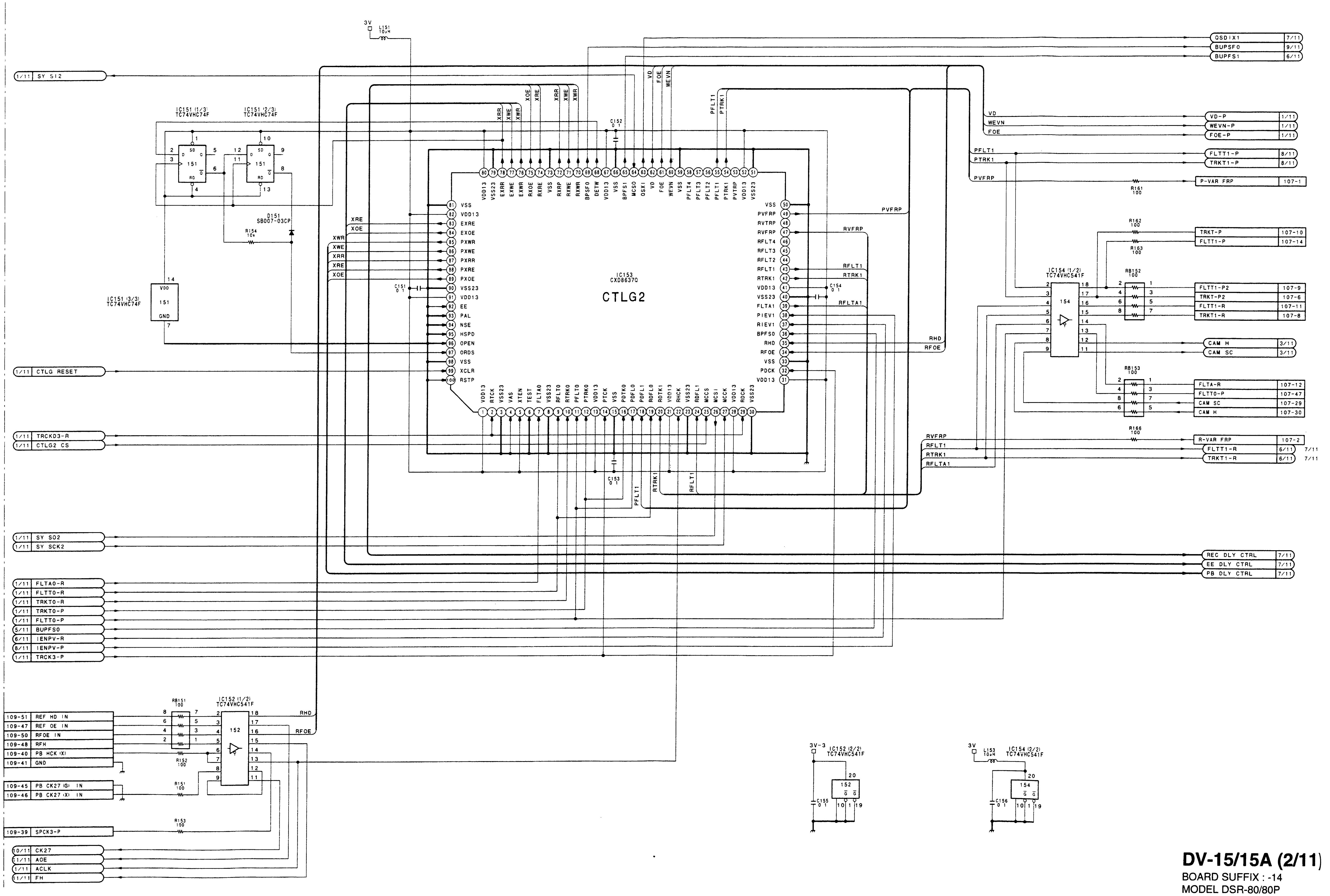

DV-15/15A (2/11)
BOARD SUFFIX : -14
MODEL DSR-80/80P

A | B | C | D | E | F | G | H

DV-15/15A (3/11): VIDEO DIGITAL IN/OUT PROCESS

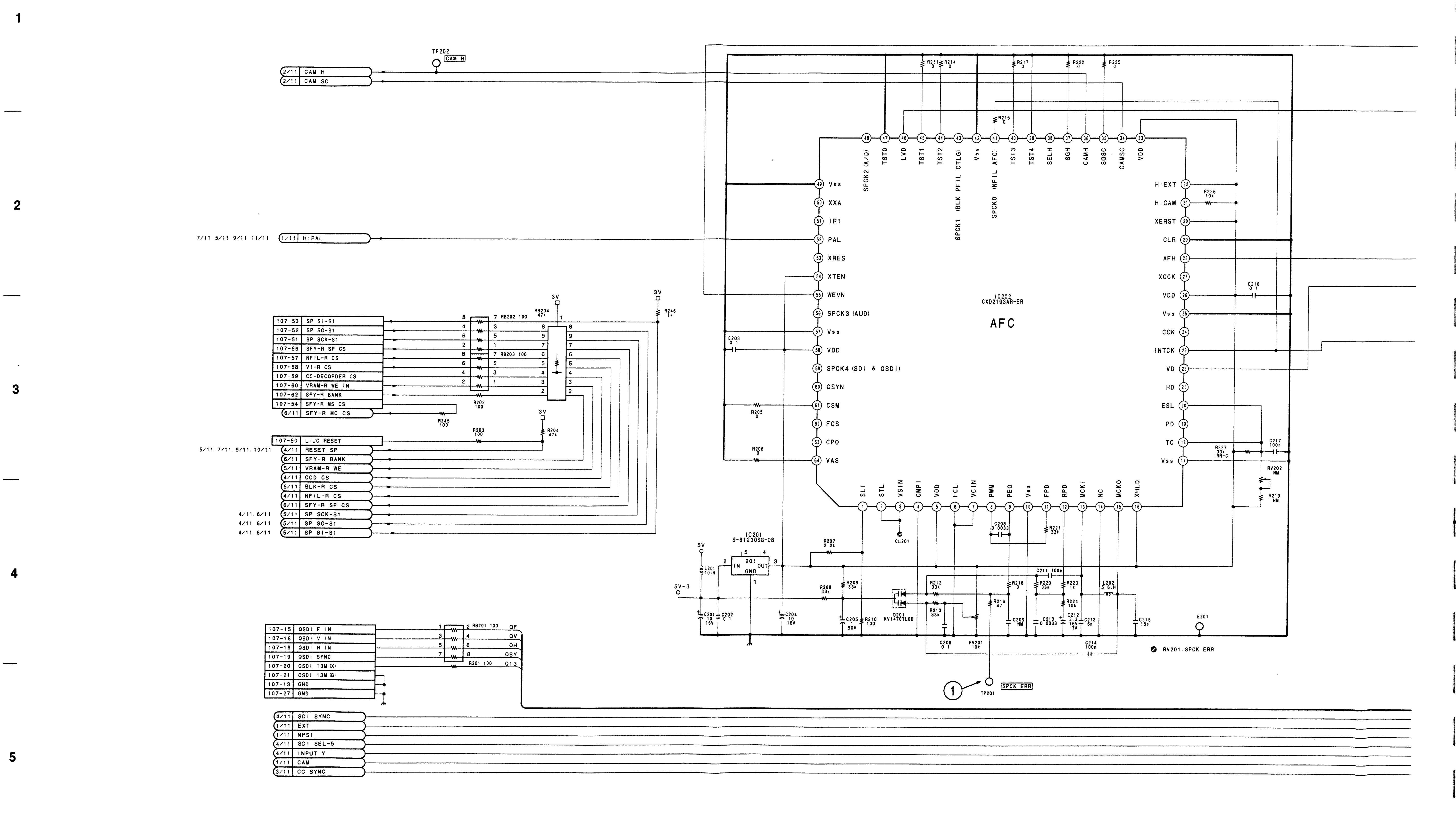

A | B | C | D | E | F | G | H

DSR-80/80P

SONY-SP0754 / DRUCK 174

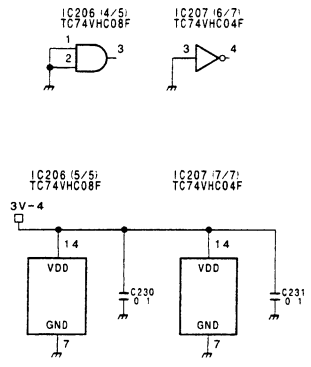

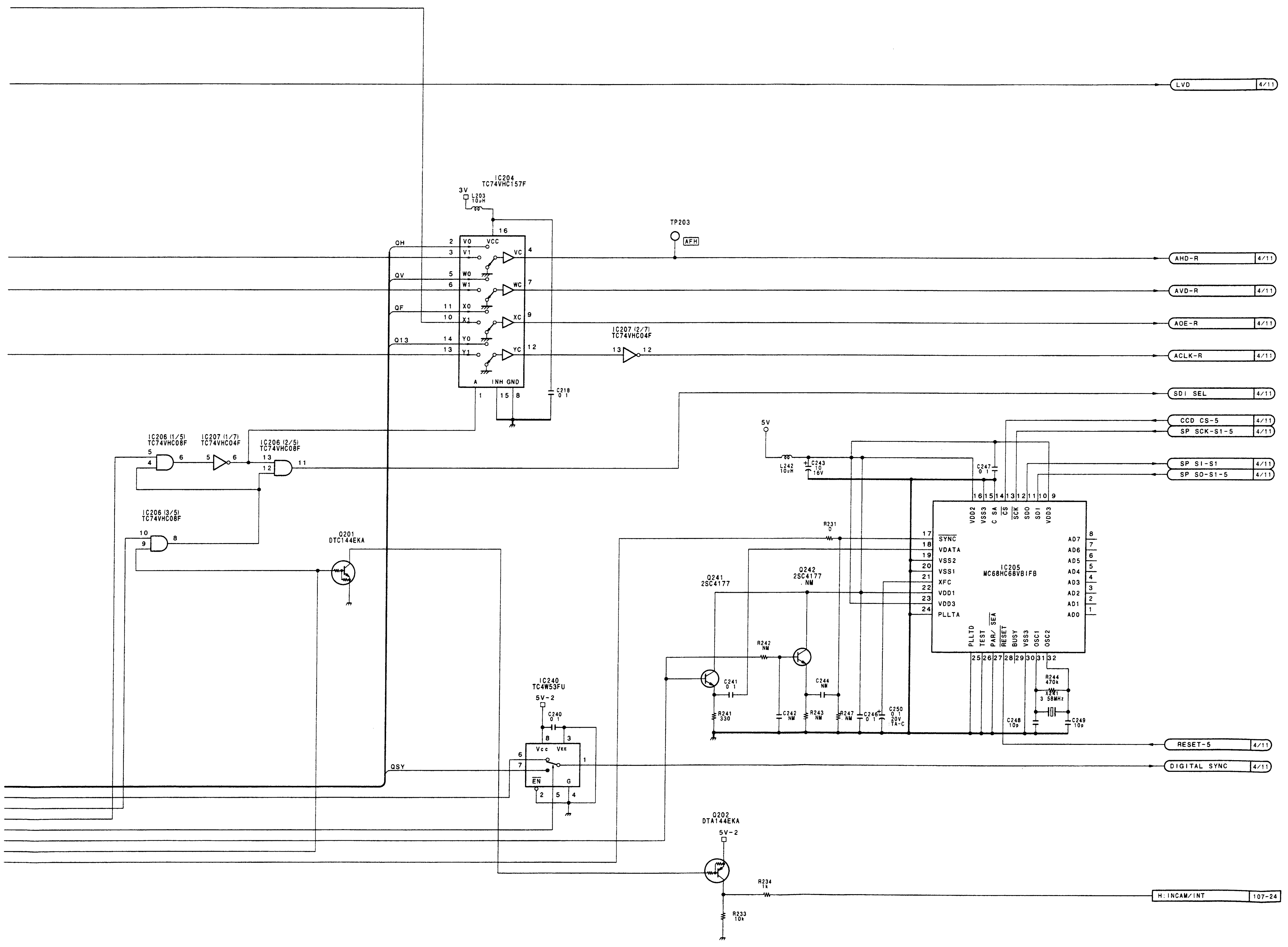

REF NO	DV-15 NTSC	DV-15A PAL
R241	330	NM
R244	470K	NM
R231	0	NM
C241	0.1	NM
C243	10/16V	NM
C246	0.1	NM
C247	0.1	NM
C248	10P	NM
C249	10P	NM
C250	0.1/20V	NM
X241	3.58M	NM
Q241	2SC4177	NM
IC205	MC68HC 68VB1FB	NM

DV-15/15A (3/11)

BOARD SUFFIX : -14
MODEL DSR-80/80P

DV-15/15A (4/11): VIDEO DIGITAL IN/OUT PROCESS

DSR-80/80P

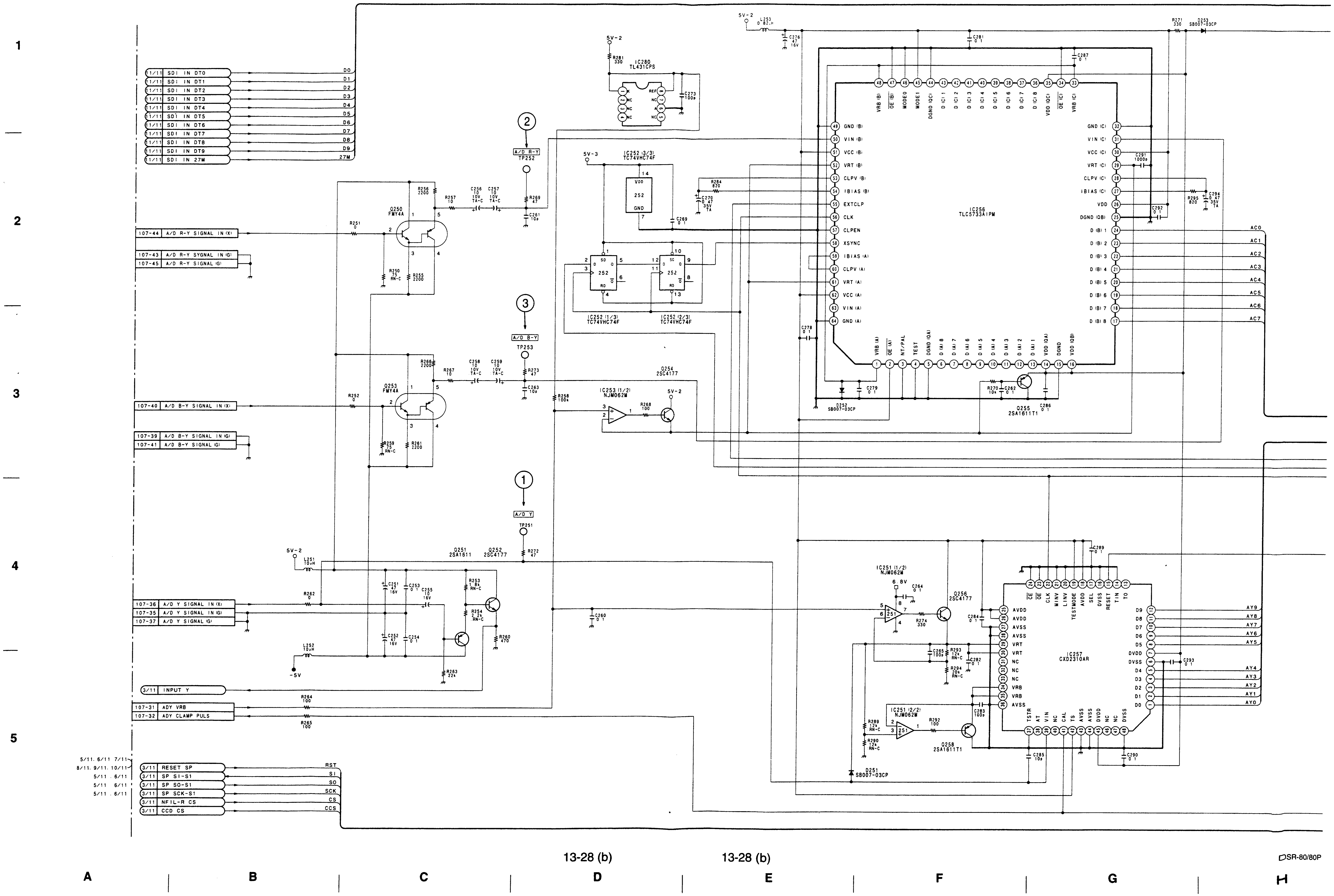

 DV-15/15A (4/11)

DSR-80/80P

DSR-80/80P

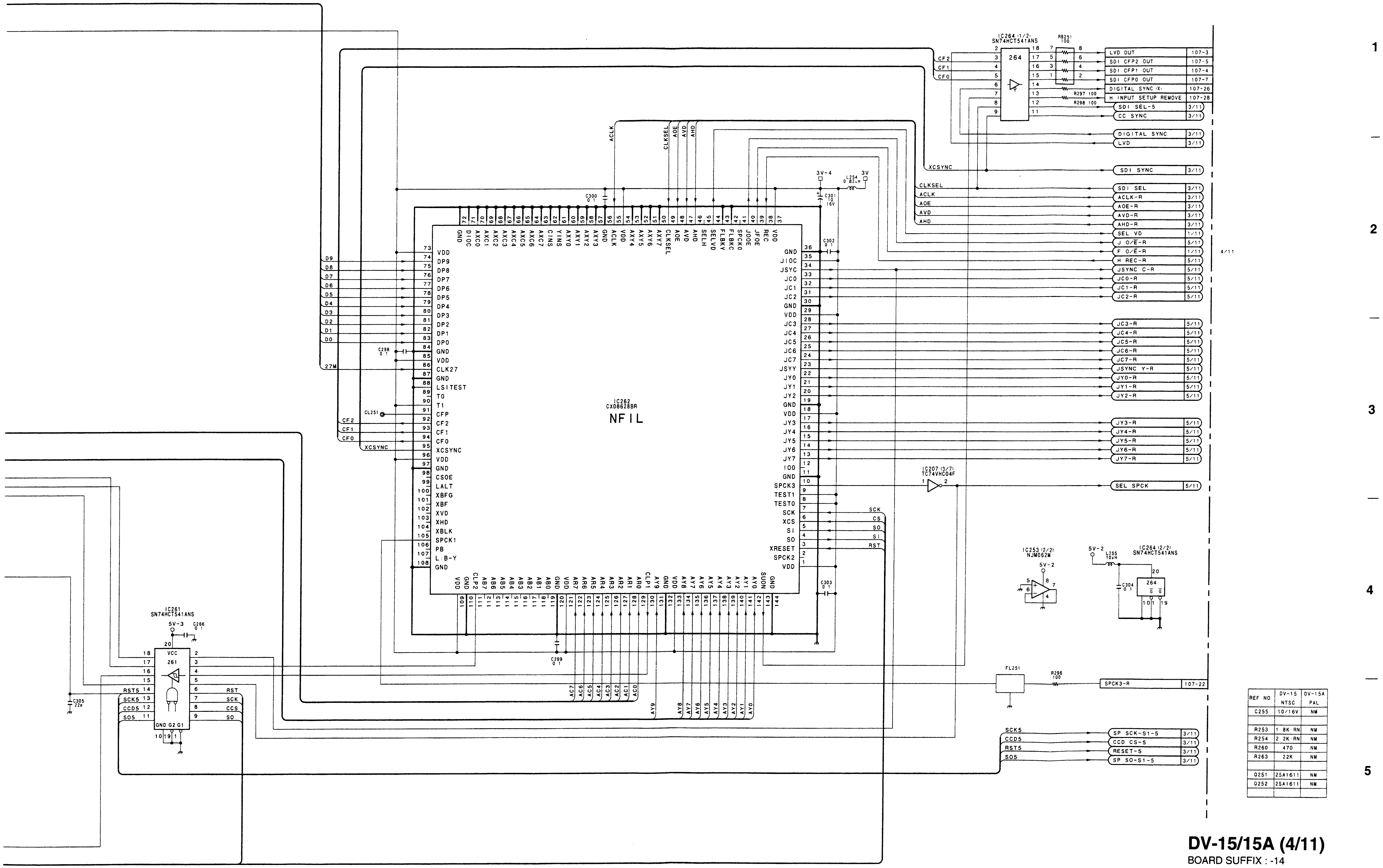

REF NO	DV-15 NTSC	DV-15A PAL
C255	10/16V	NM
R253	1.8K:RN	NM
R254	2.2K:RN	NM
R260	470	NM
R263	22K	NM
Q251	2SA1611	NM
Q252	2SA1611	NM

DV-15/15A (4/11)

BOARD SUFFIX : -14
MODEL DSR-80/80P

I | J | K | L | M | N | O | P

)NY-SP0754 / DRUCK 177

DV-15/15A (5/11): VIDEO DIGITAL IN/OUT PROCESS

DSR-80/80P

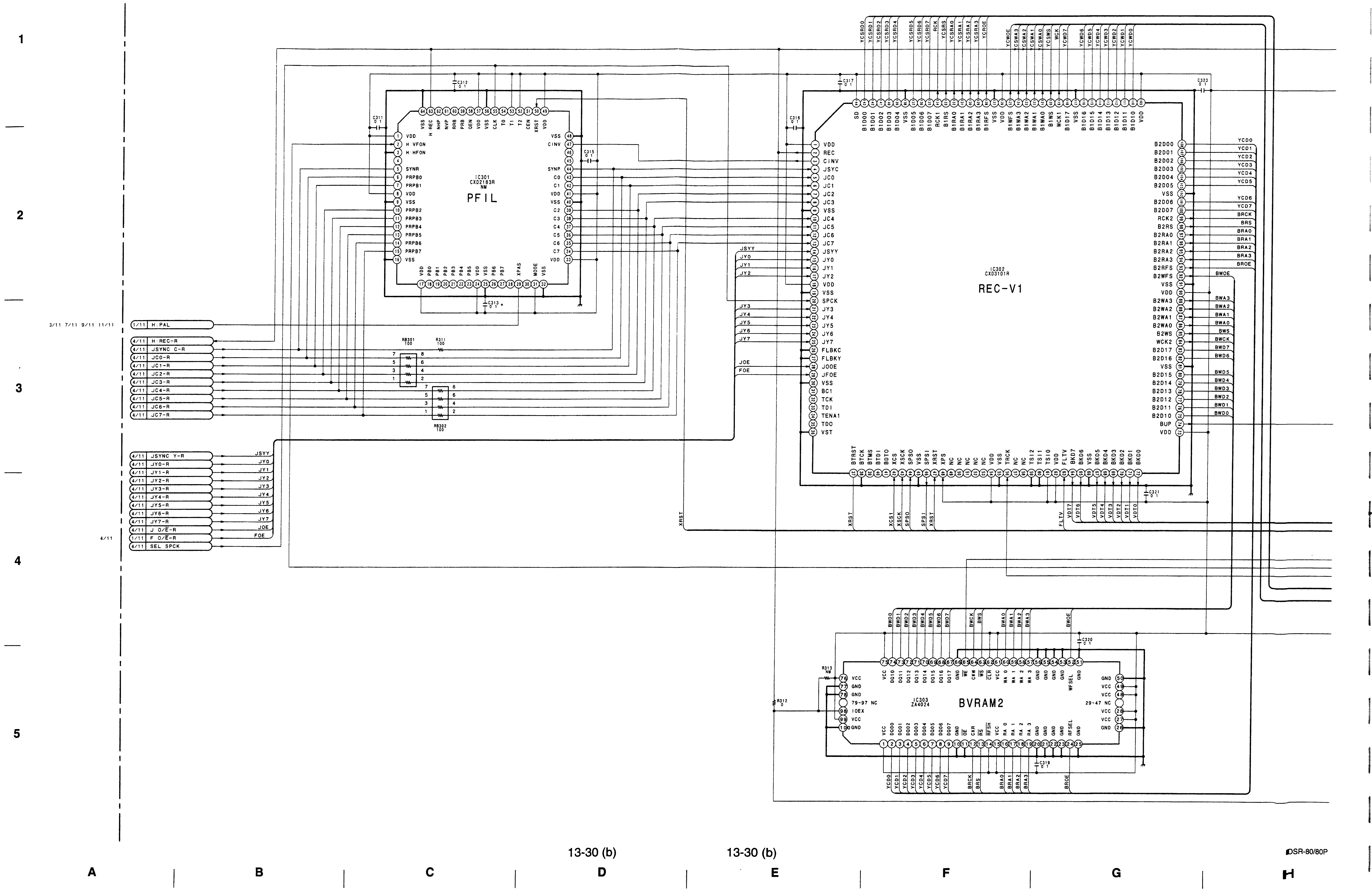

DSR-80/80P

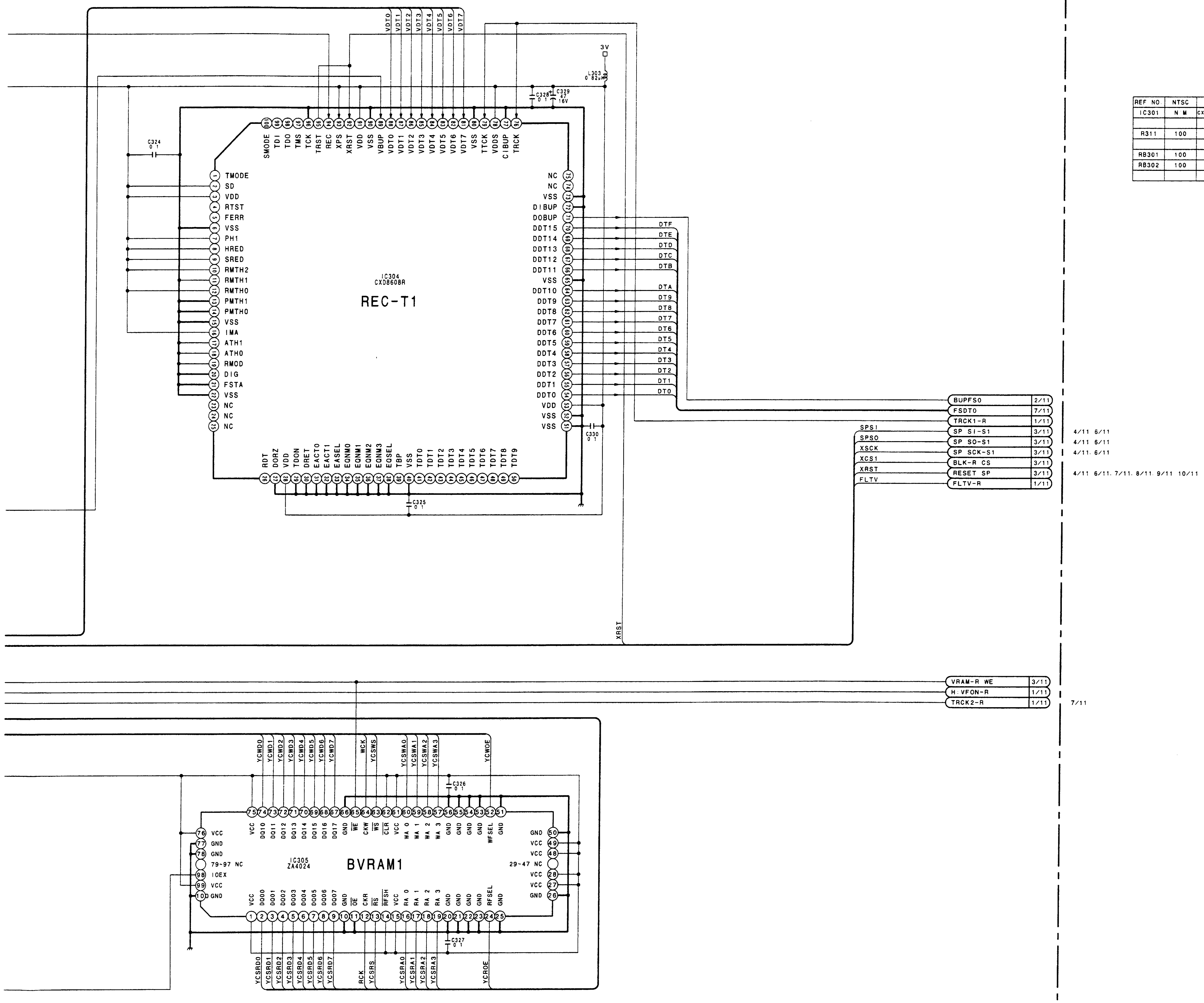

REF NO.	NTSC	PAL
IC301	N M	CXD2183AR
R311	100	N M
RB301	100	N M
RB302	100	N M

1
2
3
4
5

DV-15/15A (5/11)

BOARD SUFFIX : -14
MODEL DSR-80/80P

DV-15/15A (6/11): VIDEO DIGITAL IN/OUT PROCESS

DSR-80/80P

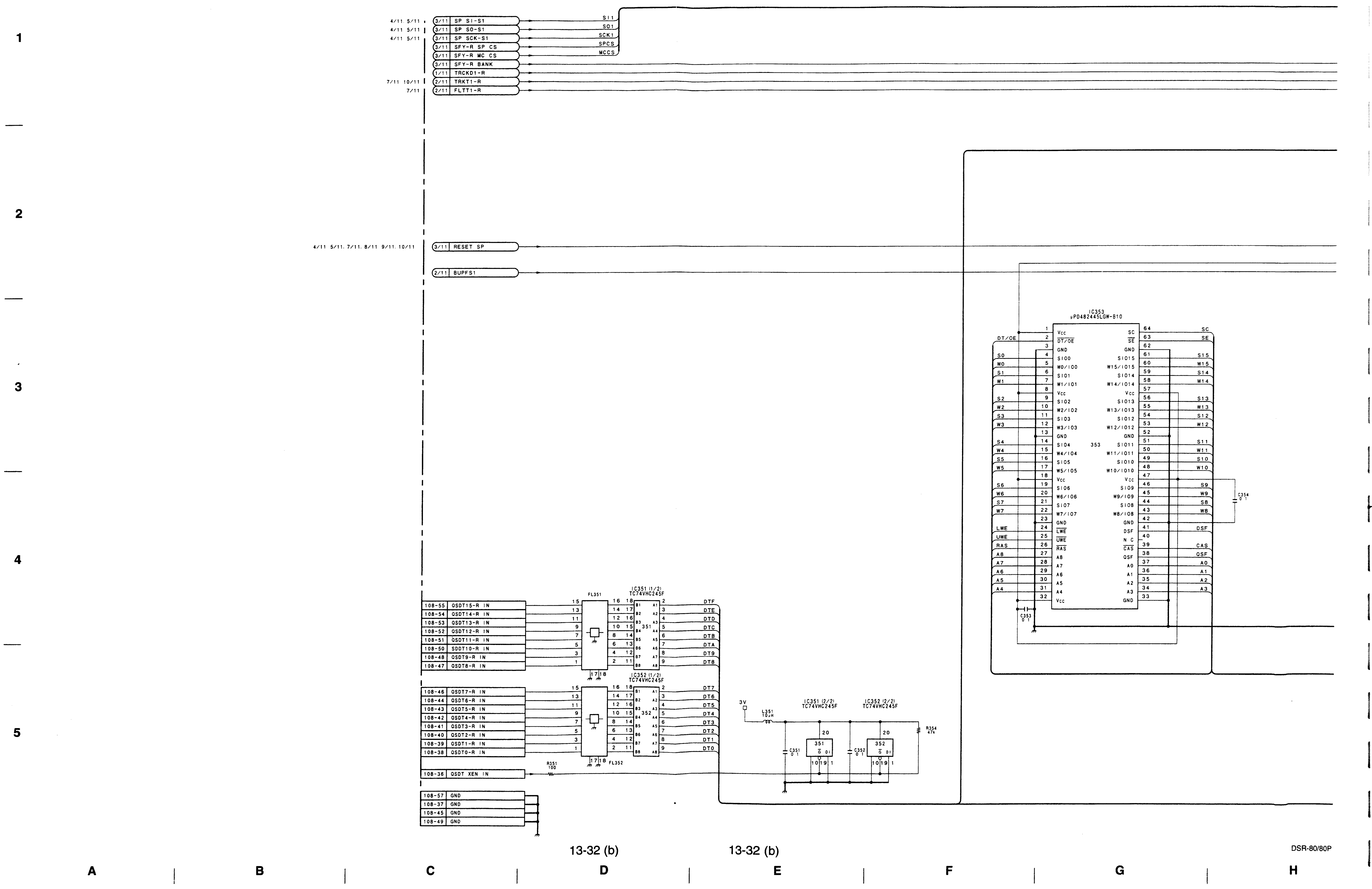

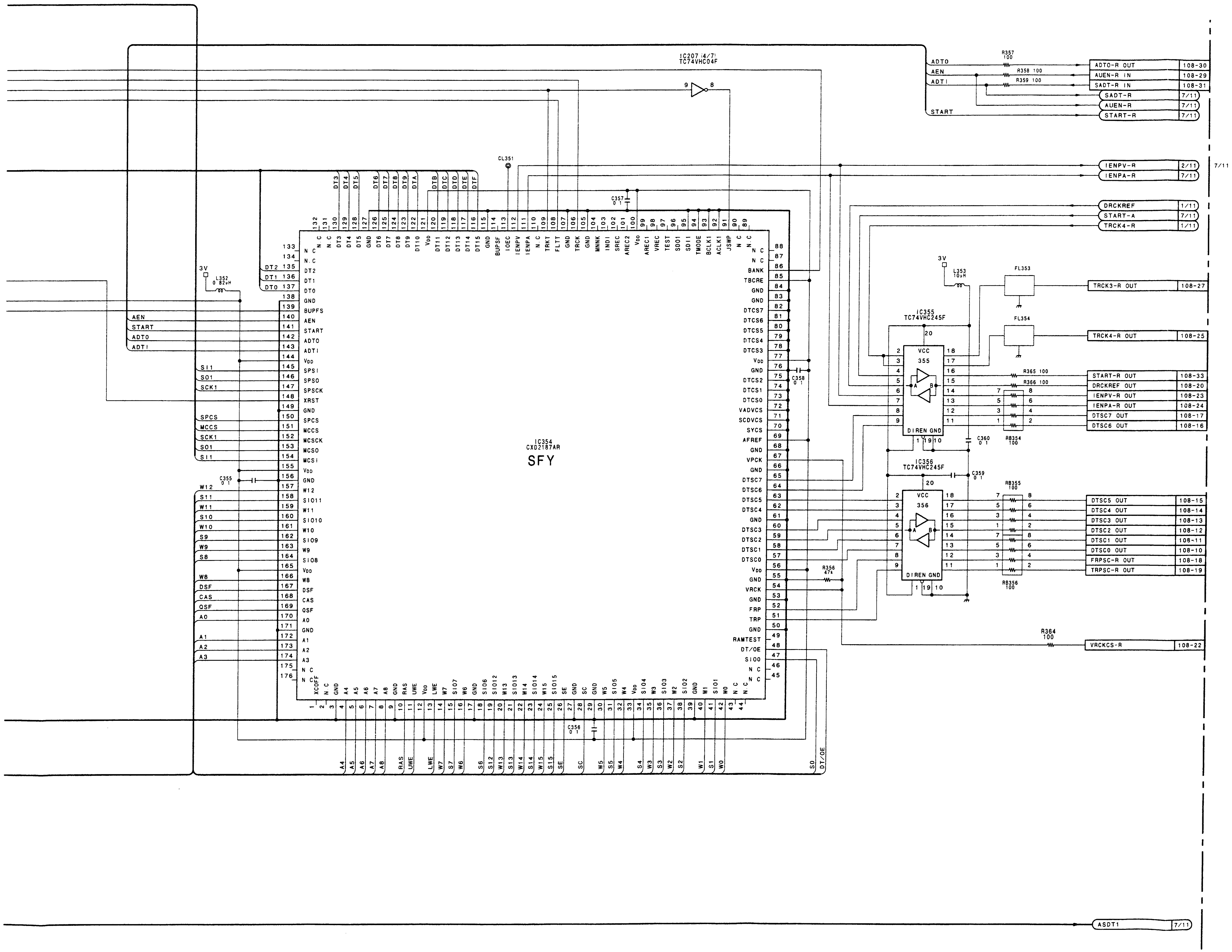

DV-15/15A (6/11)

BOARD SUFFIX : -14
MODEL DSR-80/80P

DV-15/15A (7/11): VIDEO DIGITAL IN/OUT PROCESS

DSR-80/80P

DSR-80/80P

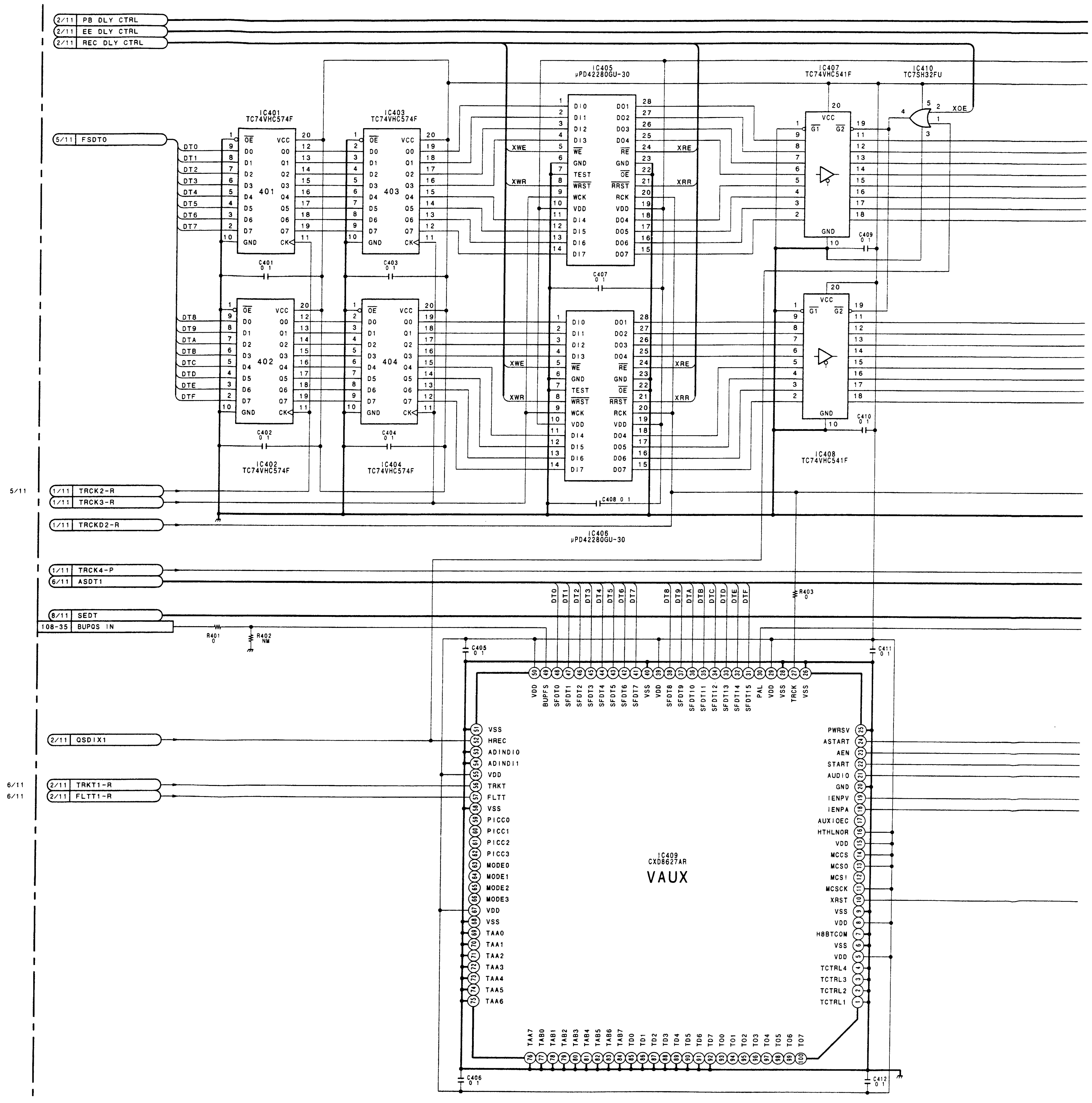

 DSR-80/80P

1

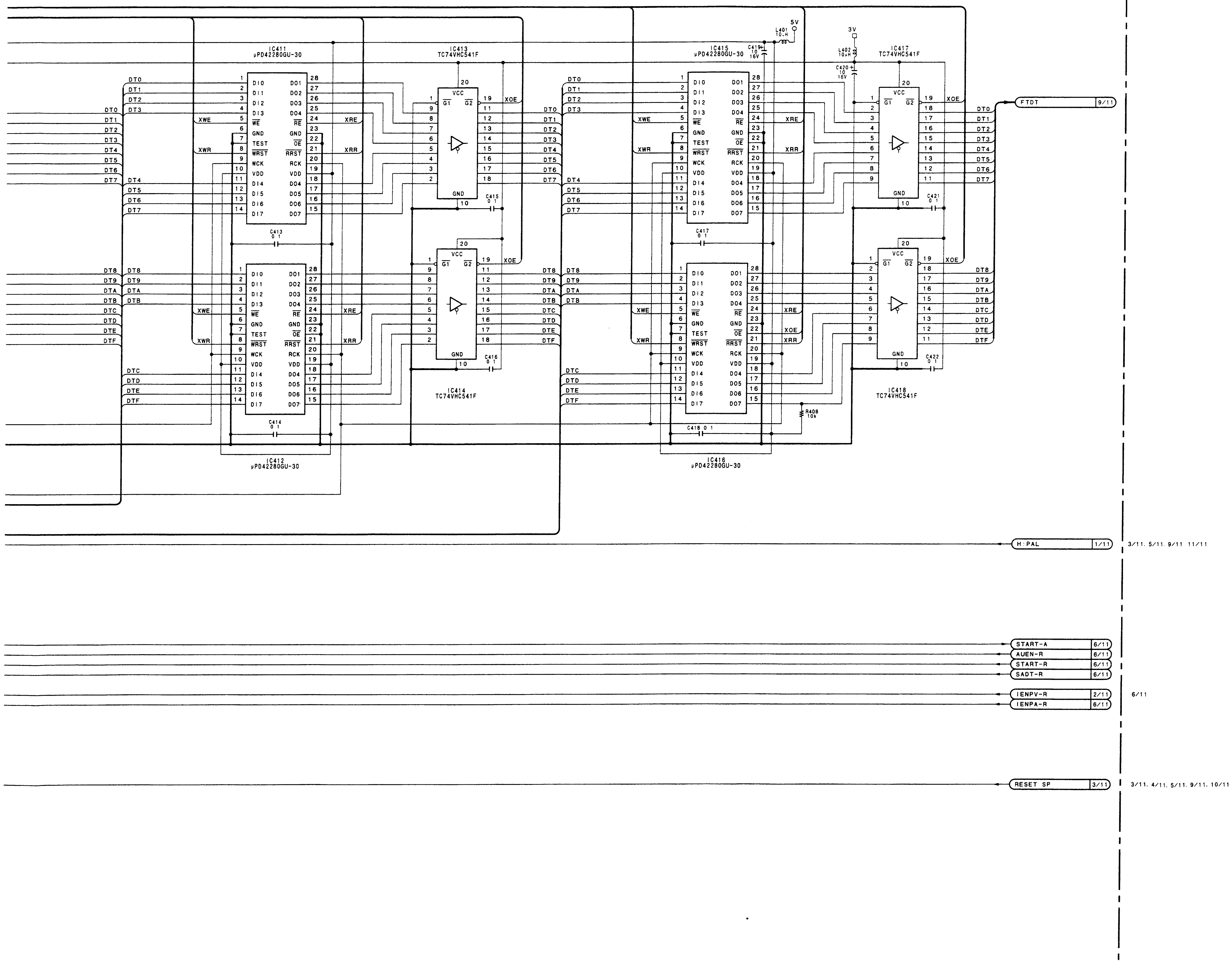

2

3

4

5

DV-15/15A (7/11)

BOARD SUFFIX : -14
MODEL DSR-80/80P

I | J | K | L | M | N | O | P

DSR-80/80P

DV-15/15A (8/11): VIDEO DIGITAL IN/OUT PROCESS

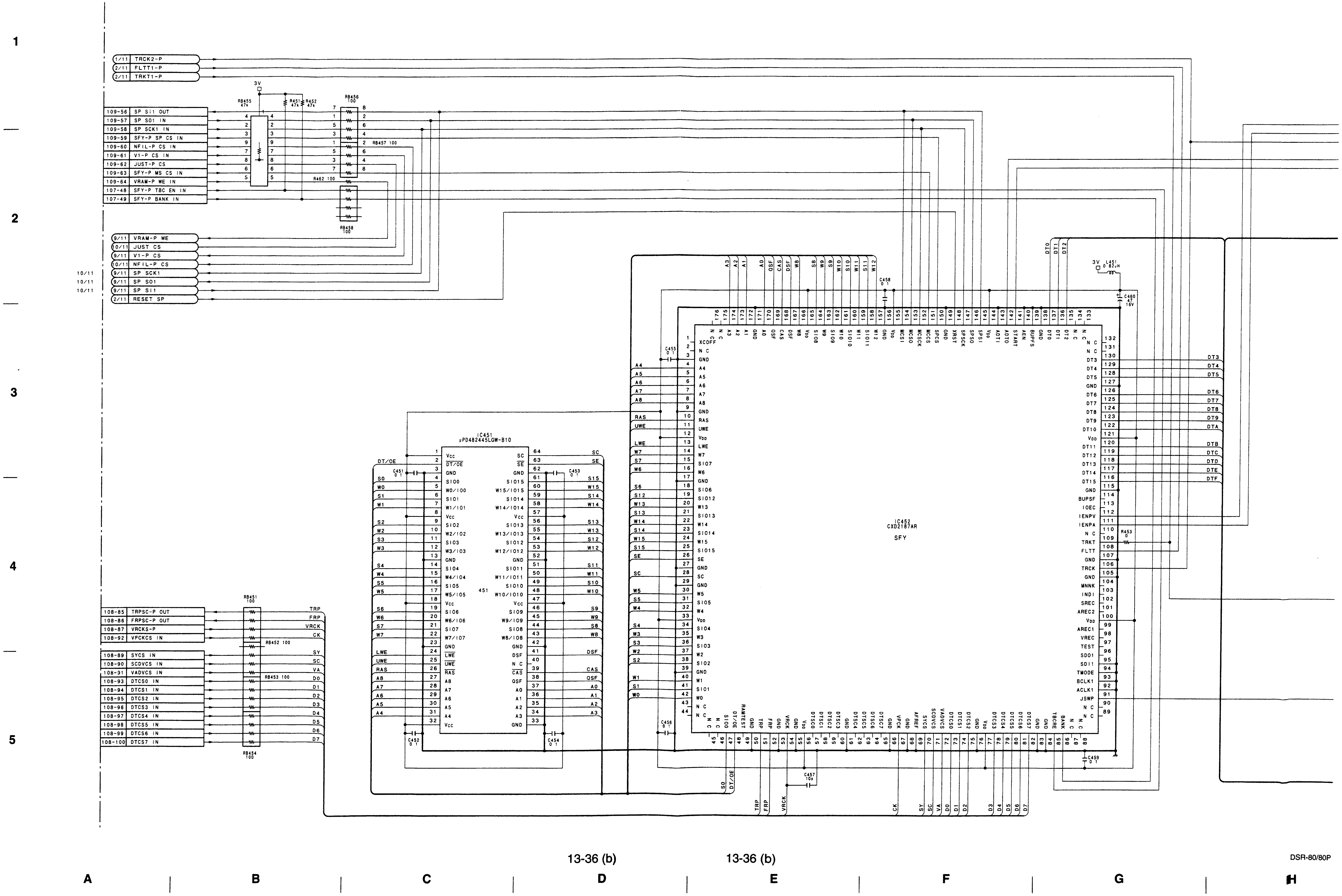

DSR-80/80P

1

–

2

–

3

–

4

–

5

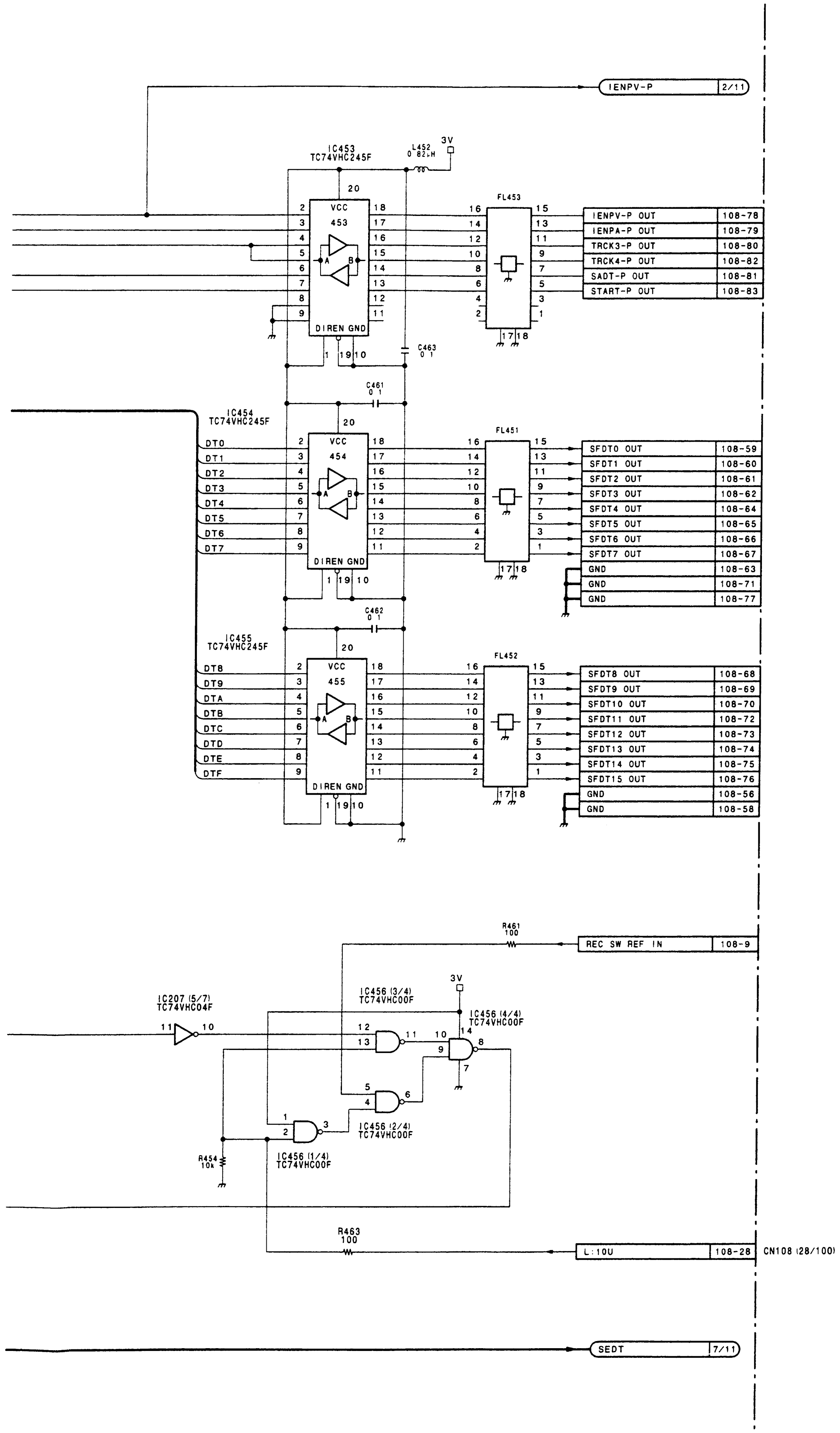

DV-15/15A (8/11)

BOARD SUFFIX : -14
MODEL DSR-80/80P

DV-15/15A (9/11): VIDEO DIGITAL IN/OUT PROCESS

DSR-80/80P

DSR-80/80P

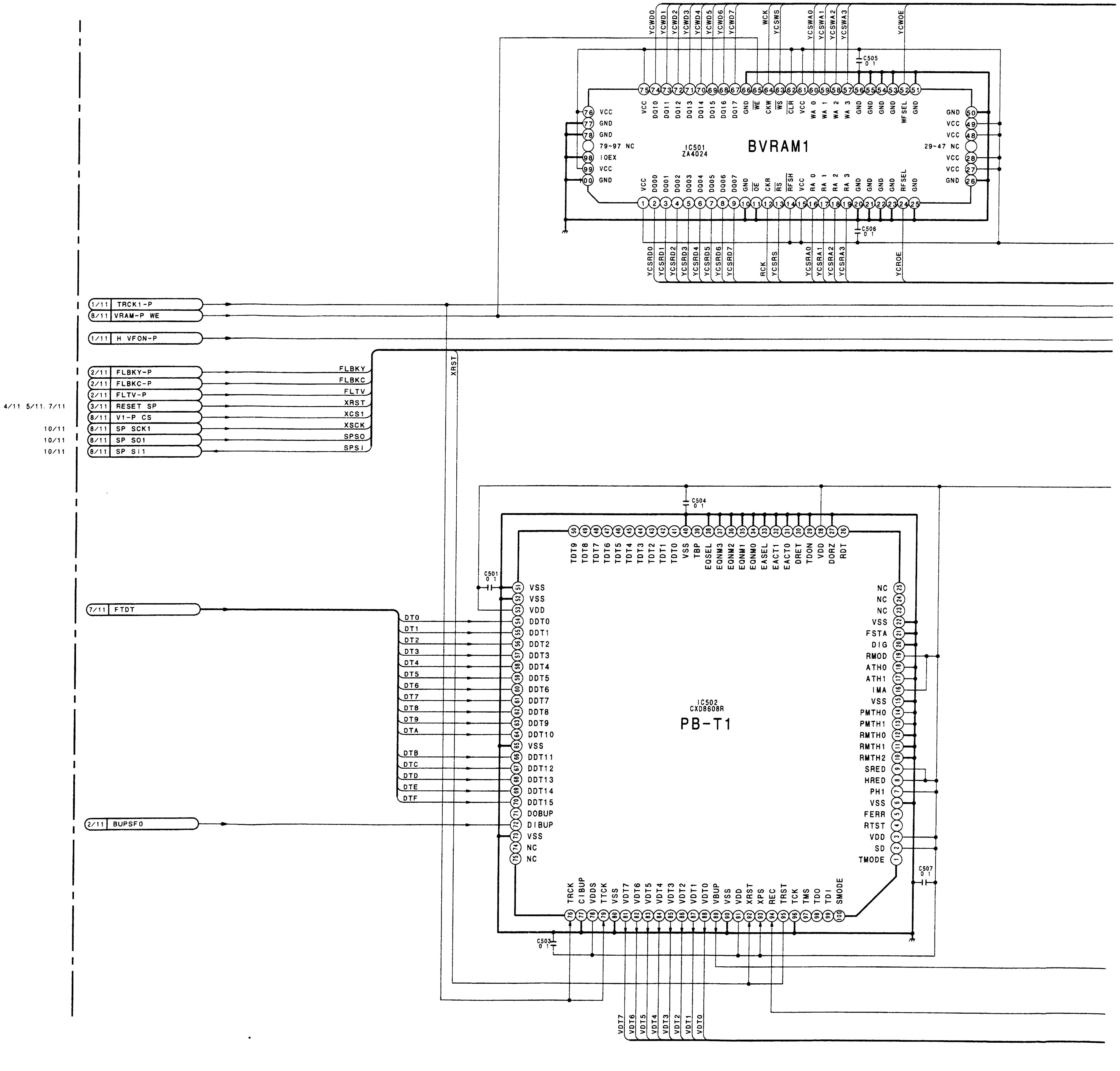

DSR-80/80P

A B C D E F G H

SONY-SP0754 / DRUCK 186

DSR-80/80P

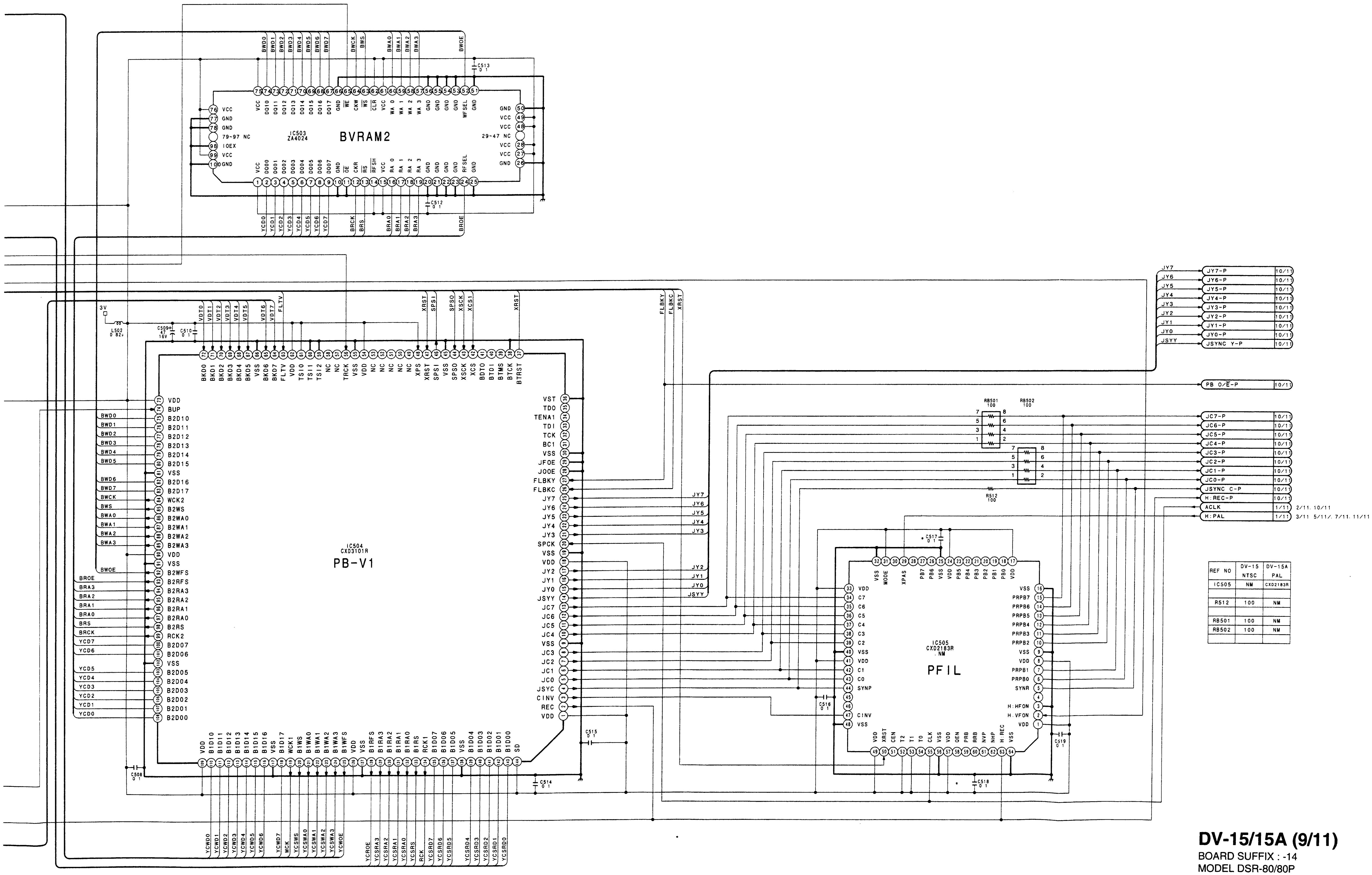

REF NO	DV-15 NTSC	DV-15A PAL
IC505	NM	CXD2183R
R512	100	NM
RB501	100	NM
RB502	100	NM

DV-15/15A (9/11)

BOARD SUFFIX : -14
MODEL DSR-80/80P

DV-15/15A (10/11): VIDEO DIGITAL IN/OUT PROCESS

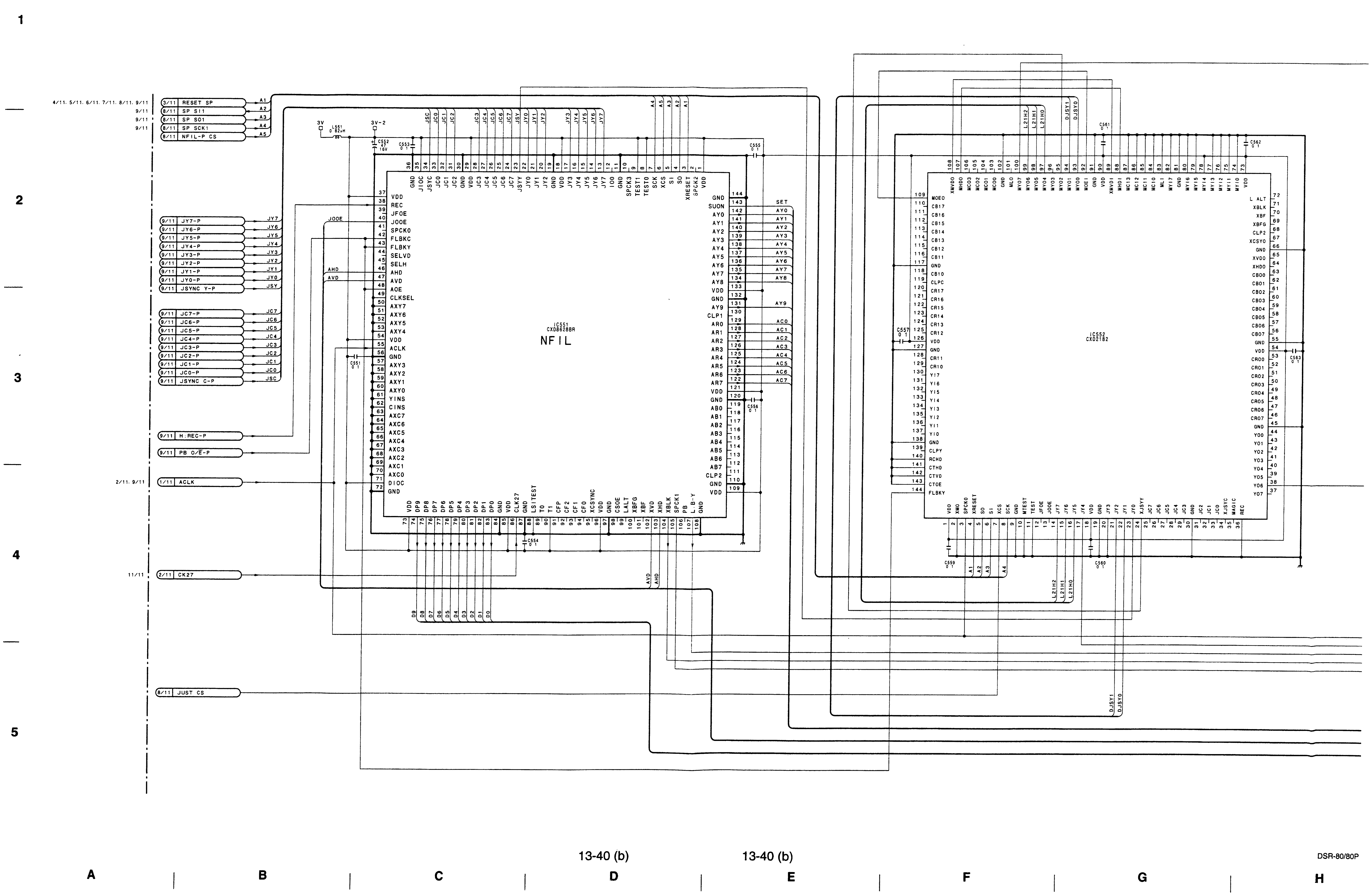

DSR-80/80P

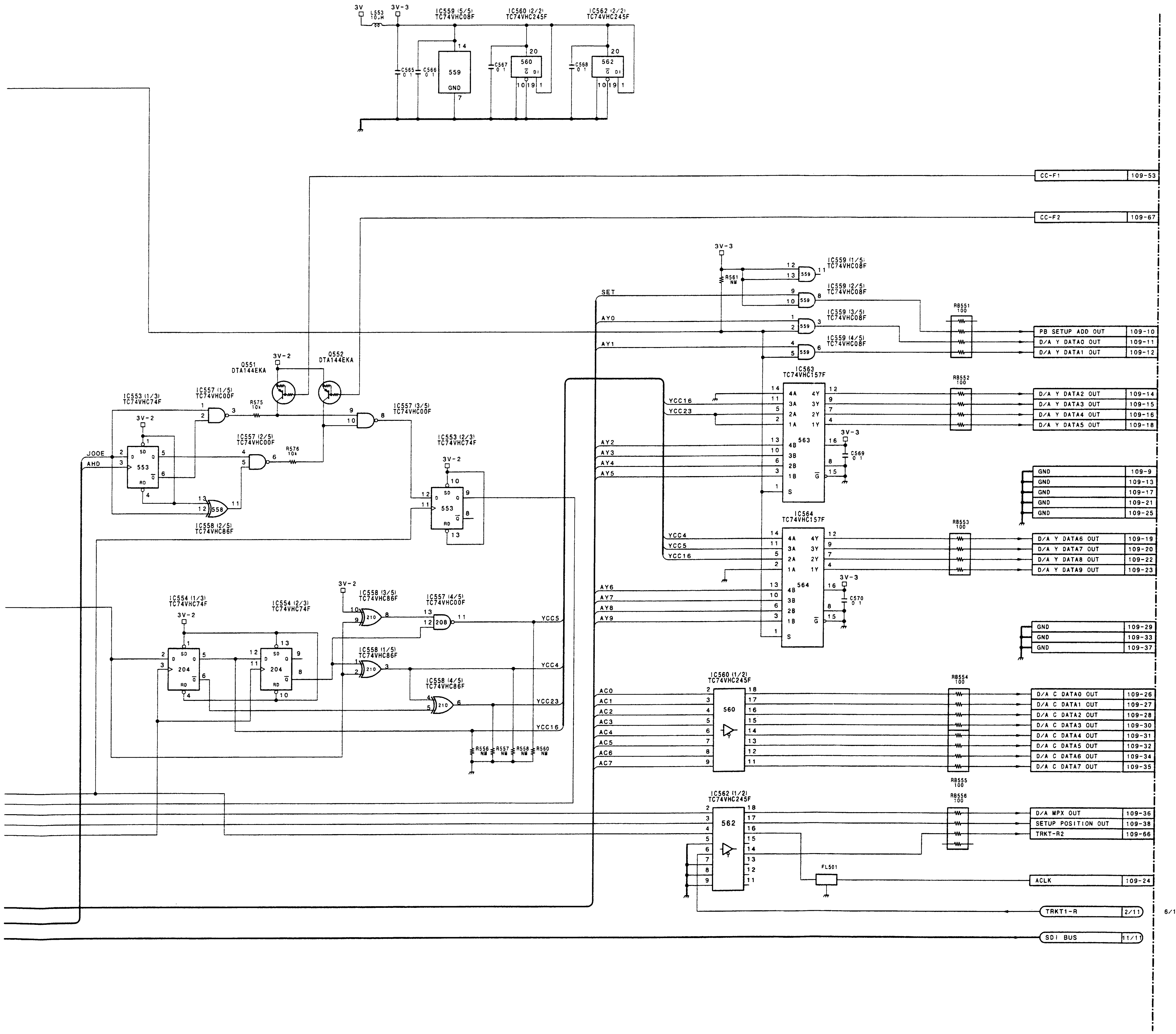

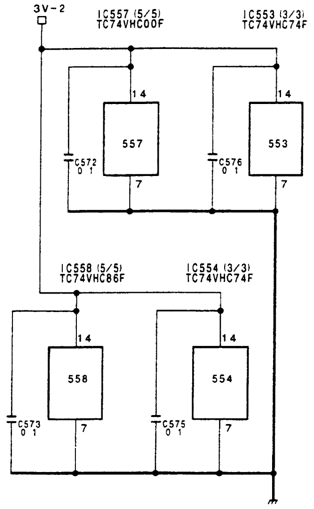

REF NO	DV-15 NTSC	DV-15A PAL
IC552	CXD2182	NM
IC553	TC74VHC74F	NM
IC554	TC74VHC74F	NM
IC557	TC74VHC00F	NM
IC558	TC74VHC86F	NM
Q551	DTA144EKA	NM
Q552	DTA144EKA	NM
R556	NM	0
R557	NM	0
R558	NM	0
R560	NM	0
R561	NM	0
R575	10K	NM
R576	10K	NM
C557	0.1	NM
C559	0.1	NM
C560	0.1	NM
C561	0.1	NM
C562	0.1	NM
C563	0.1	NM
C572	0.1	NM
C573	0.1	NM
C575	0.1	NM
C576	0.1	NM

1
2
3
4
5

DV-15/15A (10/11)

BOARD SUFFIX : -14
MODEL DSR-80/80P

DV-15/15A (11/11): VIDEO DIGITAL IN/OUT PROCESS

DSR-80/80P

DSR-80/80P

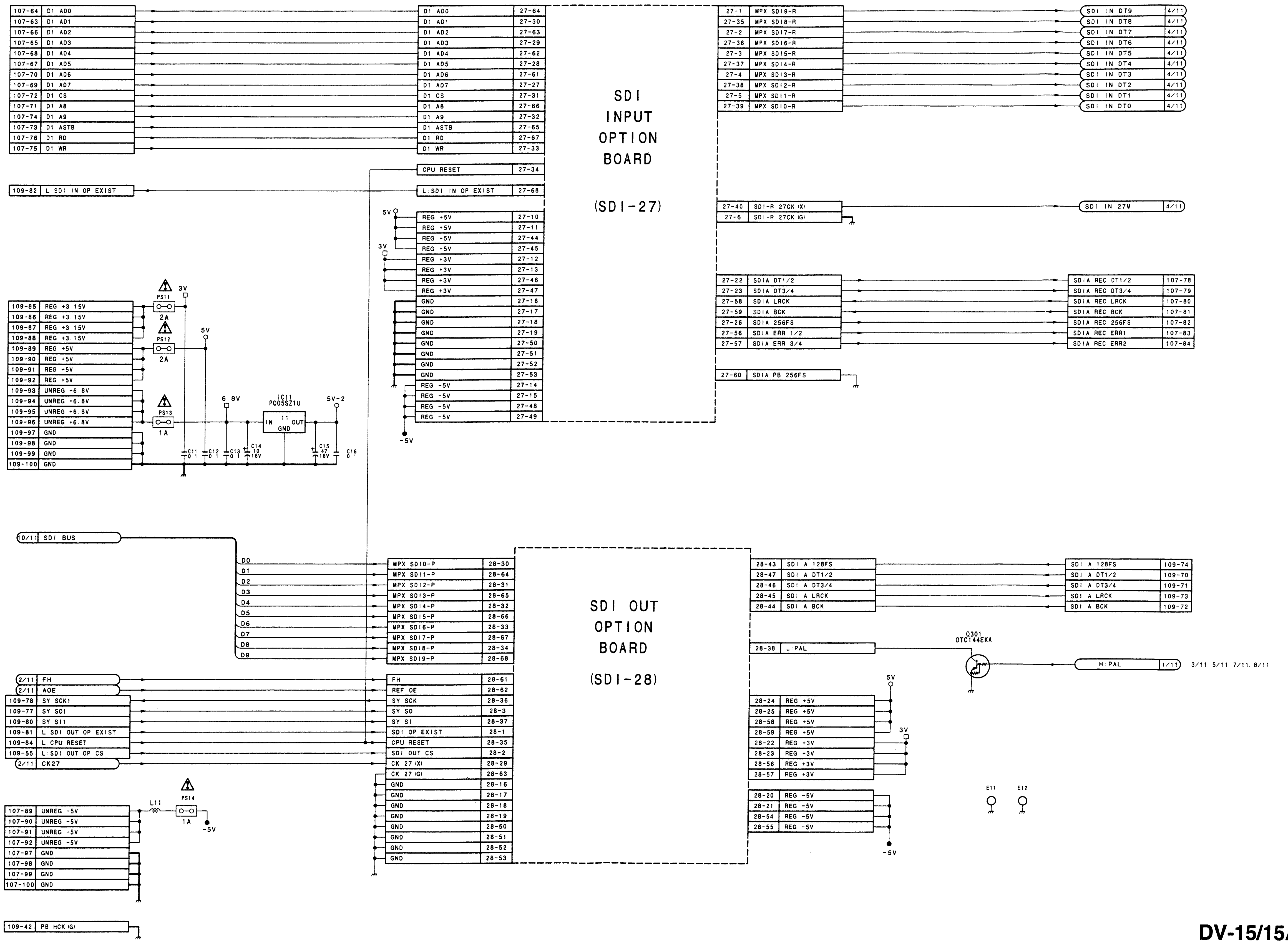

1
2
3
4
5

DV-15/15A (11/11)

BOARD SUFFIX : -14
MODEL DSR-80/80P

DV-15/15A (1/11): VIDEO DIGITAL IN/OUT PROCESS

DSR-80/80P

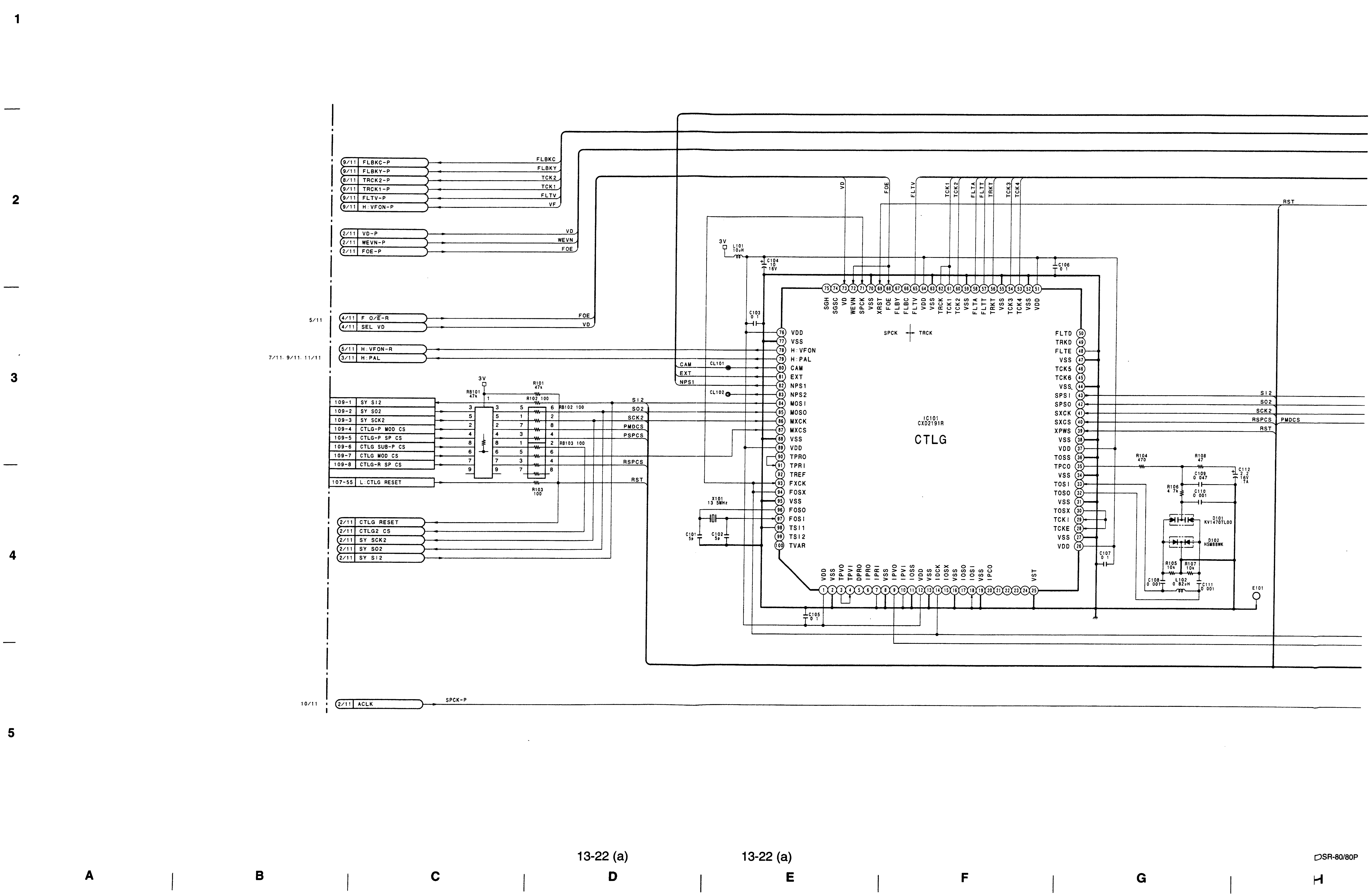

DV-15/15A (1/11)

DSR-80/80P

DSR-80/80P

1

2

3

4

5

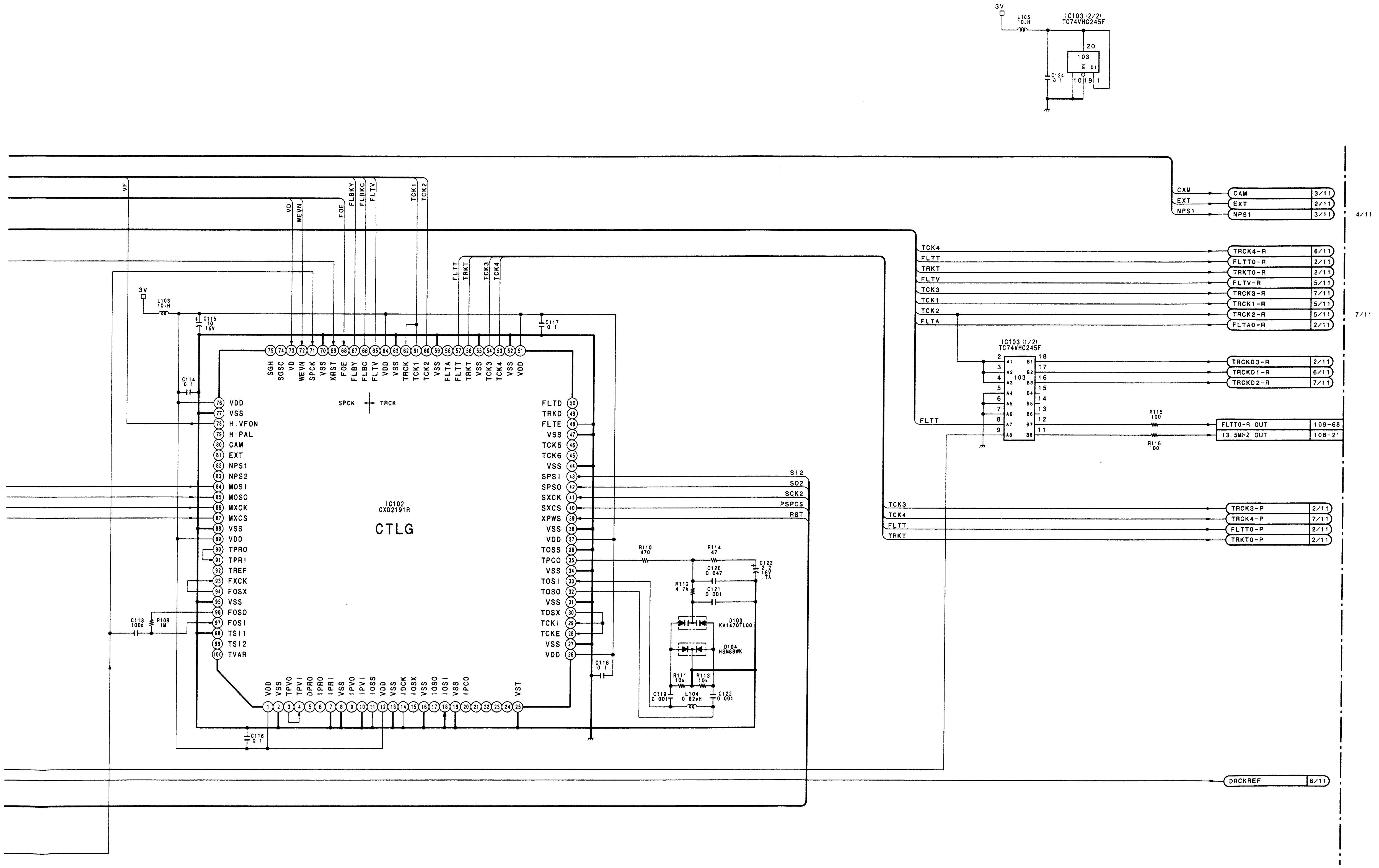

DV-15/15A (1/11)

BOARD SUFFIX : -13
MODEL DSR-80/80P

DSR-80/80P

DV-15/15A: VIDEO DIGITAL IN/OUT PROCESS

DV-15 (3/11)

① TP201 MODE: 75% Color Bar/REC • EE (NTSC)
MODE: 100% Color Bar/REC • EE (PAL)

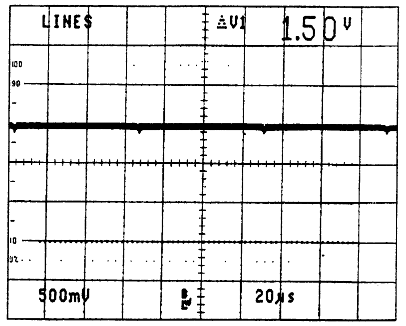

DV-15 (4/11)

① TP251 MODE: 75% Color Bar/REC • EE (NTSC)

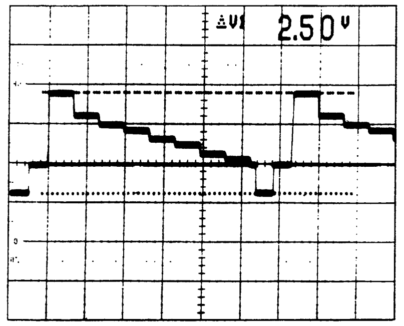

② TP252 MODE: 75% Color Bar/REC • EE (NTSC)
MODE: 100% Color Bar/REC • EE (PAL)

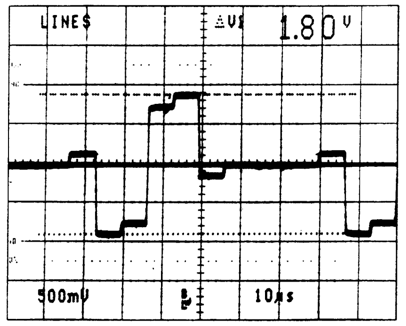

① TP251 MODE: 100% Color Bar/REC • EE (PAL)

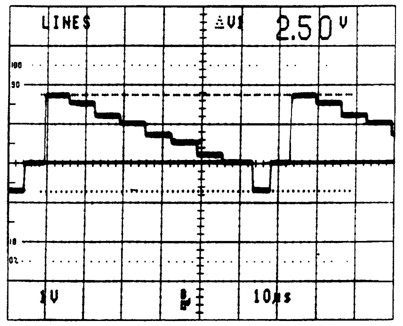

③ TP253 MODE: 75% Color Bar/REC • EE (NTSC)
MODE: 100% Color Bar/REC • EE (PAL)

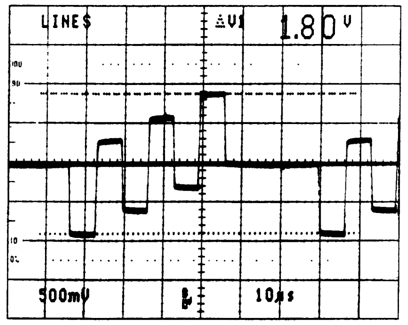

DV-15/15A (2/11): VIDEO DIGITAL IN/OUT PROCESS

DSR-80/80P

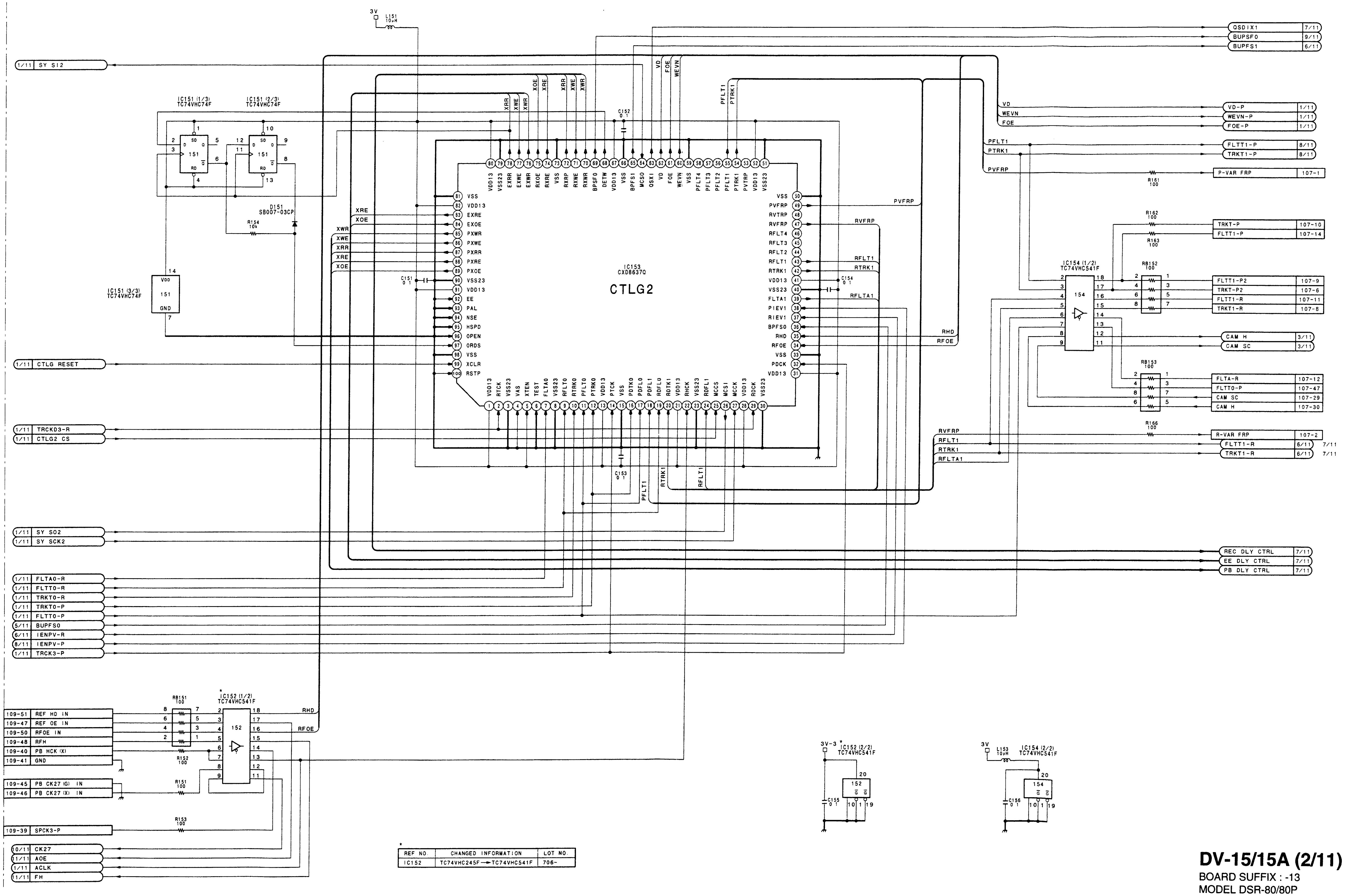

REF NO.	CHANGED INFORMATION	LOT NO.
IC152	TC74VHC245F→TC74VHC541F	706-

DV-15/15A (2/11)
BOARD SUFFIX : -13
MODEL DSR-80/80P

DV-15/15A (3/11): VIDEO DIGITAL IN/OUT PROCESS

DSR-80/80P

1

2

3

4

5

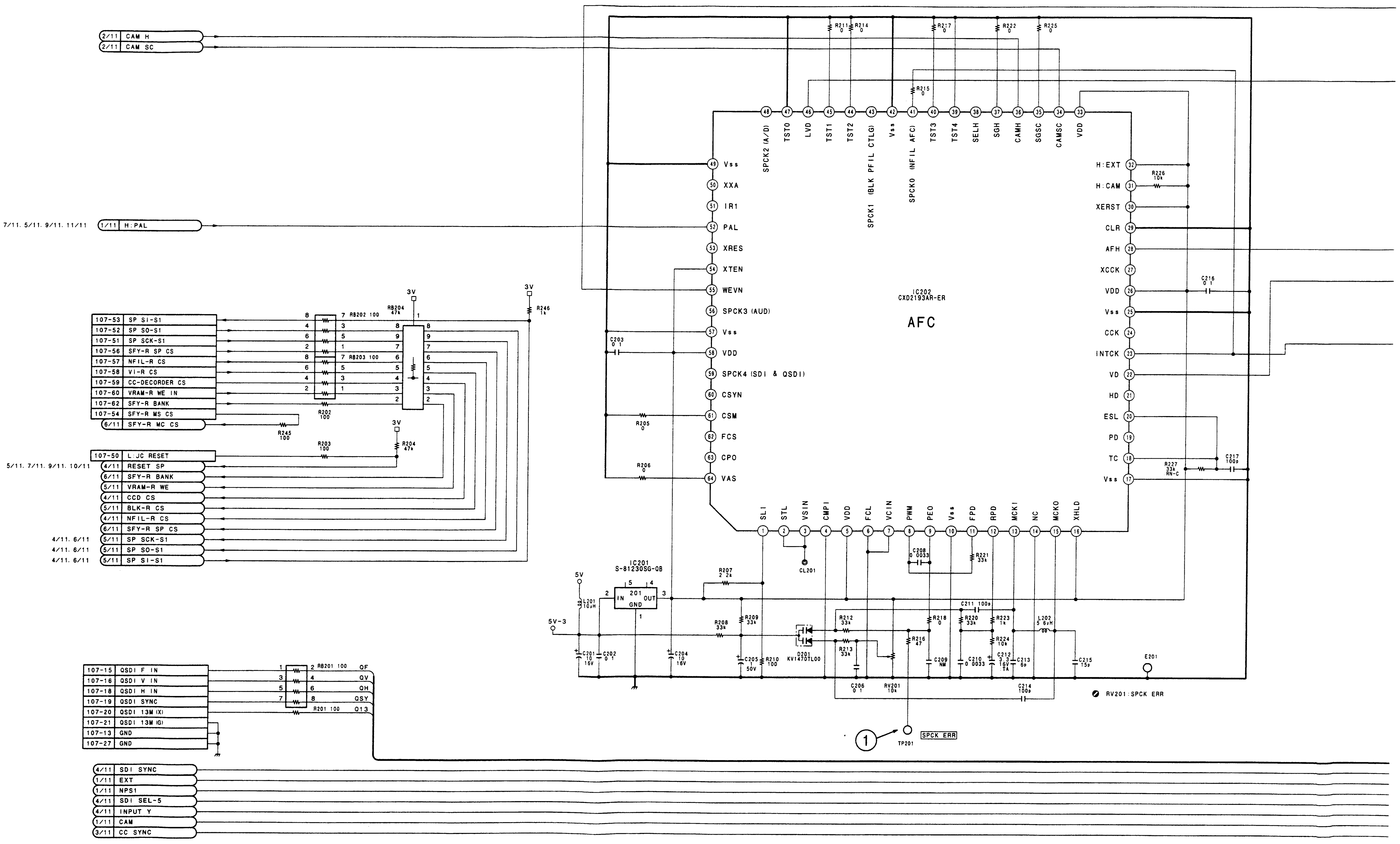

A | B | C | D | E | F | G | H

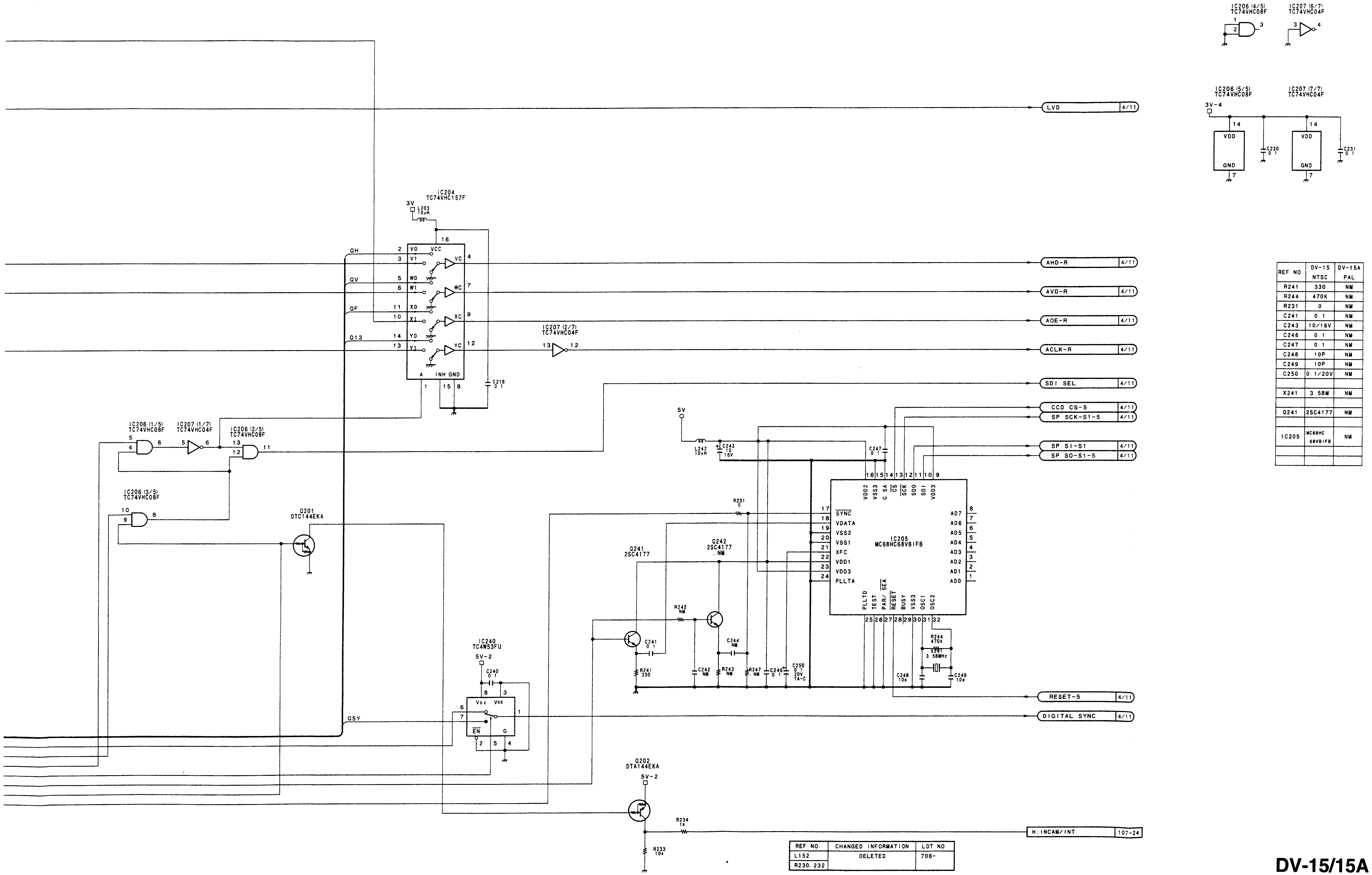

REF NO	DV-15 NTSC	DV-15A PAL
R241	330	NM
R244	470K	NM
R231	0	NM
C241	0.1	NM
C243	10/16V	NM
C246	0.1	NM
C247	0.1	NM
C248	10P	NM
C249	10P	NM
C250	0.1/20V	NM
X241	3.58M	NM
Q241	2SC4177	NM
IC205	MC68HC 68VB1FB	NM

REF NO.	CHANGED INFORMATION	LOT NO.
L152	DELETED	706-
R230. 232		

DV-15/15A (3/11)

BOARD SUFFIX : -13
MODEL DSR-80/80P

DV-15/15A (4/11): VIDEO DIGITAL IN/OUT PROCESS

DSR-80/80P

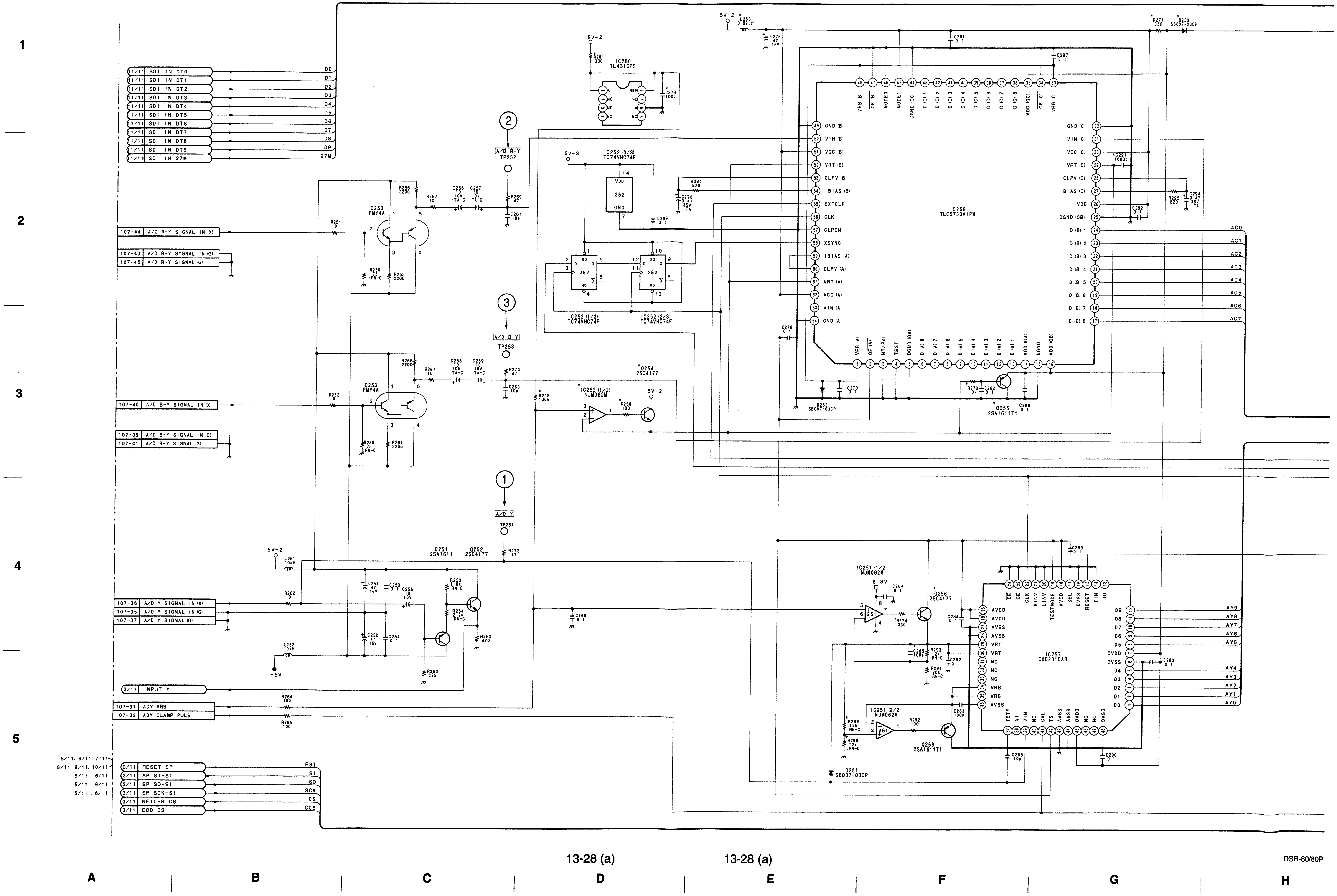

DSR-80/80P

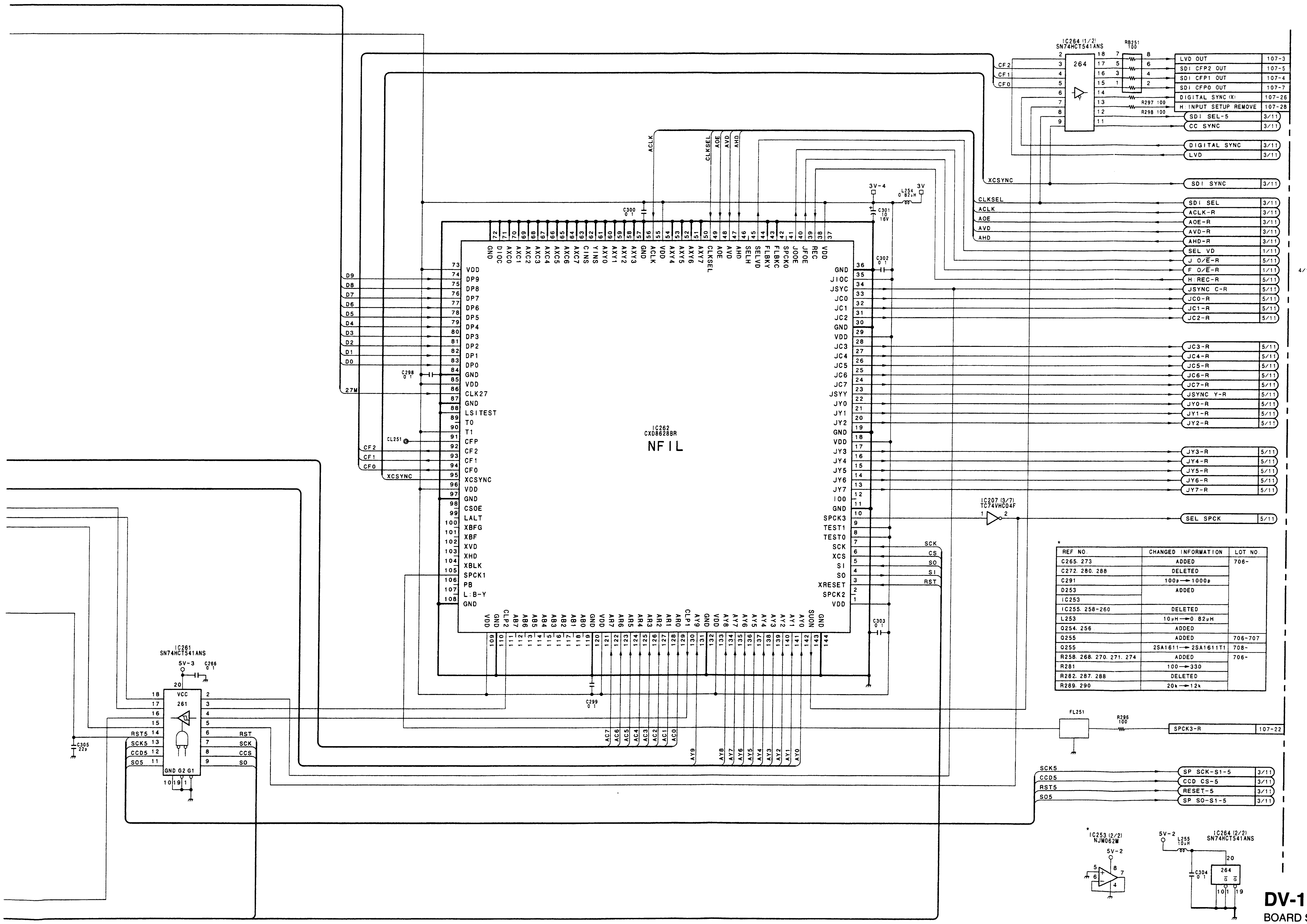

*

REF NO.	CHANGED INFORMATION	LOT NO.
C265. 273	ADDED	706-
C272. 280. 288	DELETED	
C291	100p → 1000p	
D253	ADDED	
IC253		
IC255. 258-260	DELETED	
L253	10μH → 0.82μH	
Q254. 256	ADDED	
Q255	ADDED	706-707
Q255	2SA1611 → 2SA1611T1	708-
R258. 268. 270. 271. 274	ADDED	706-
R281	100 → 330	
R282. 287. 288	DELETED	
R289. 290	20k → 12k	

REF NO	DV-15 NTSC	DV-15A PAL
C255	10/16V	NM
R253	1.8K:RN	NM
R254	2.2K:RN	NM
R260	470	NM
R263	22K	NM
Q251	2SA1611	NM
Q252	2SA1611	NM

DV-15/15A (4/11)
BOARD SUFFIX : -13
MODEL DSR-80/80P

DV-15/15A (5/11): VIDEO DIGITAL IN/OUT PROCESS

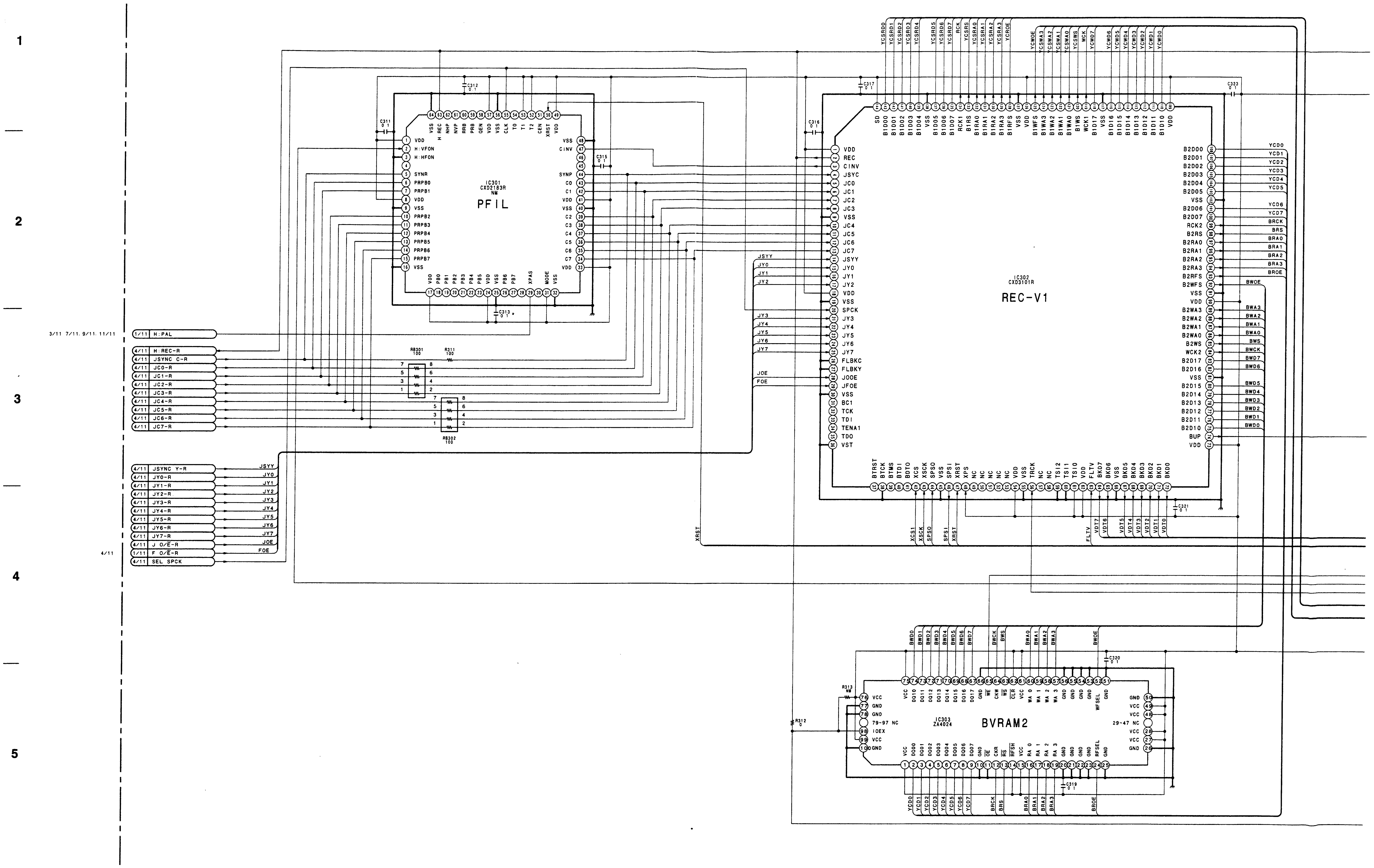

 DV-15/15A (5/11)

 DSR-80/80P

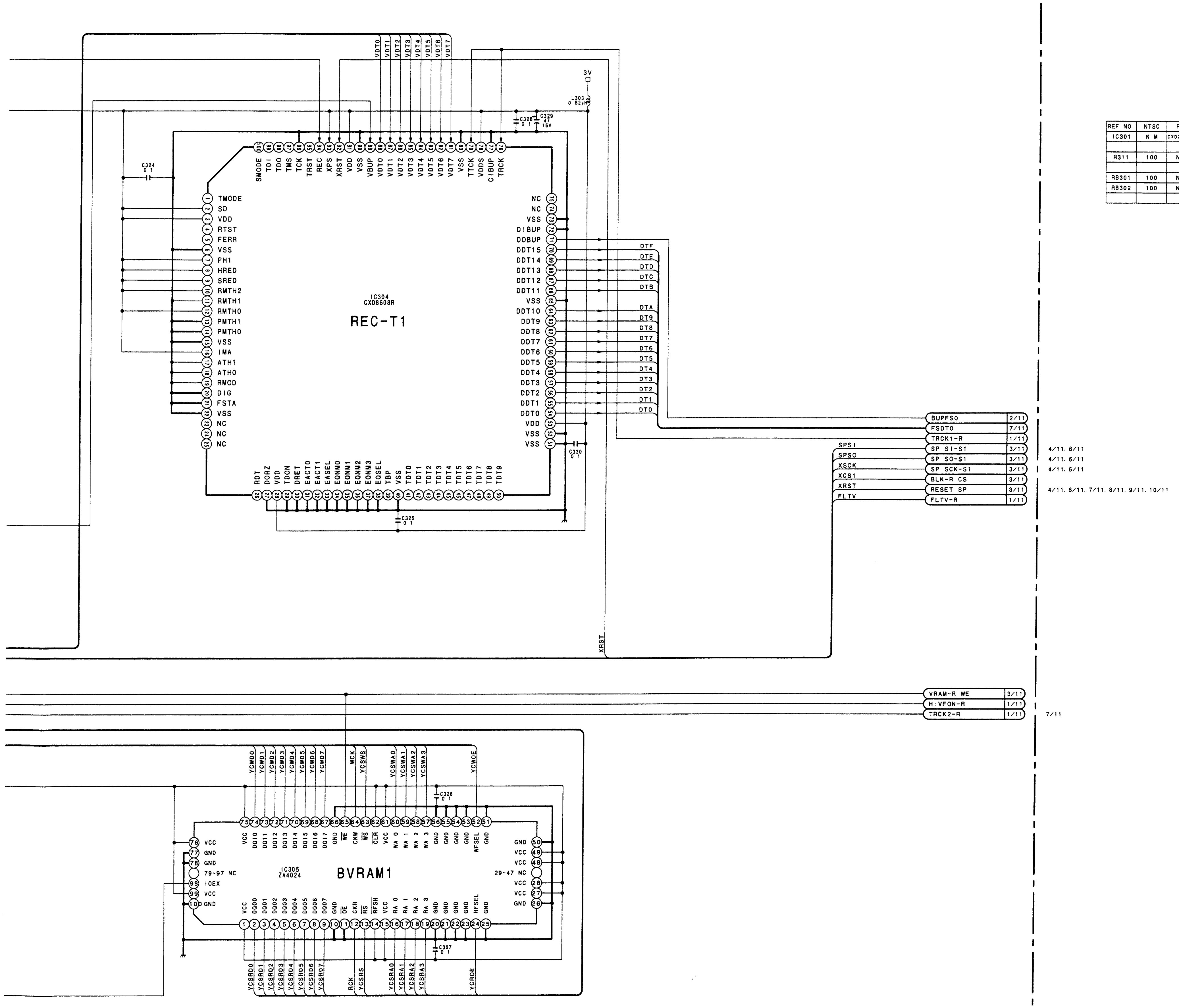

REF NO.	NTSC	PAL
IC301	N M	CXD2183AR
R311	100	N M
RB301	100	N M
RB302	100	N M

1

2

3

4

5

DV-15/15A (5/11)

BOARD SUFFIX : -13
MODEL DSR-80/80P

 13-31 (a)

I | J | K | L | M | N | O | P

DV-15/15A (6/11)

DV-15/15A (6/11): VIDEO DIGITAL IN/OUT PROCESS

DSR-80/80P

DSR-80/80P

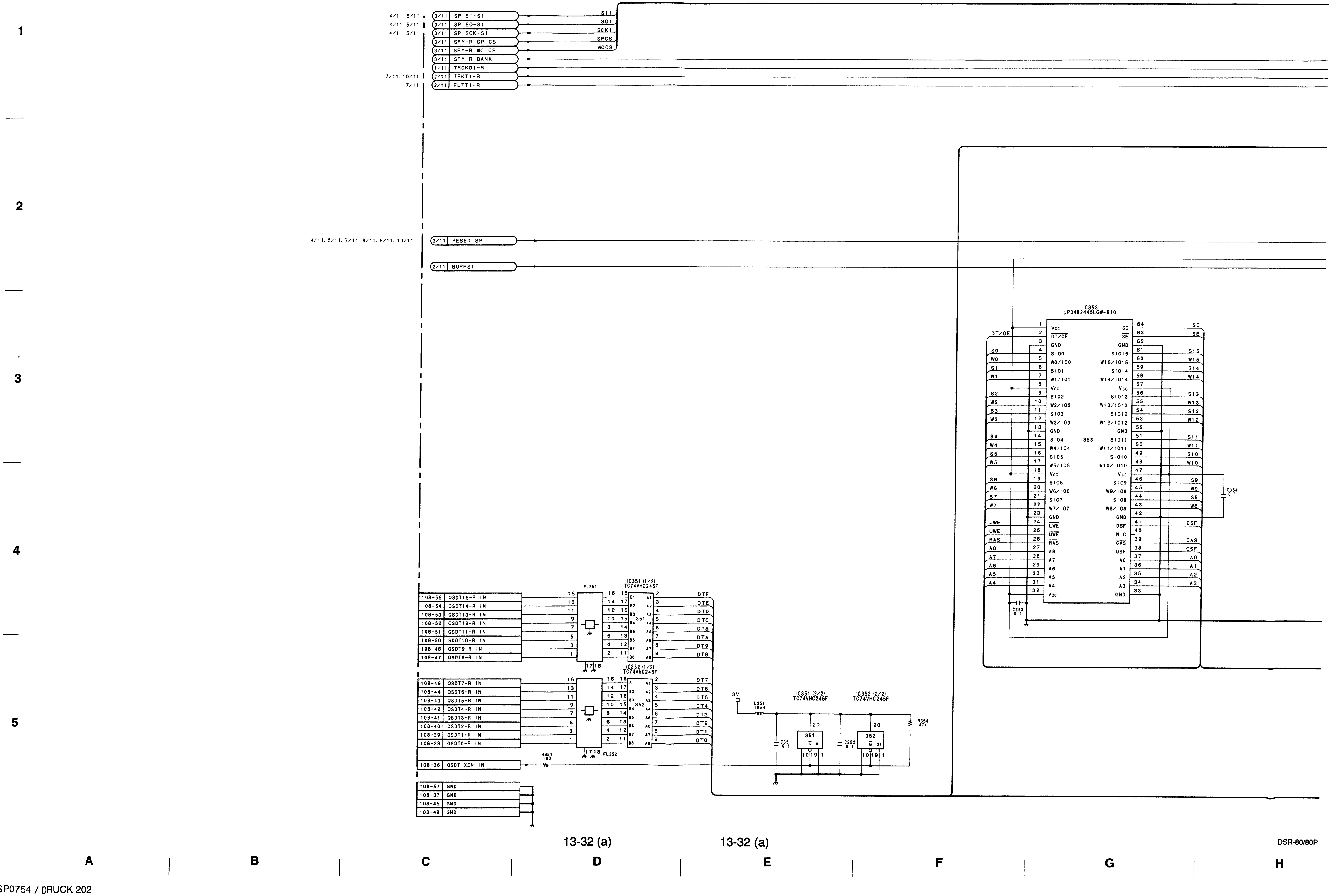

13-32 (a)

SONY-SP0754 / DRUCK 202

DSR-80/80P

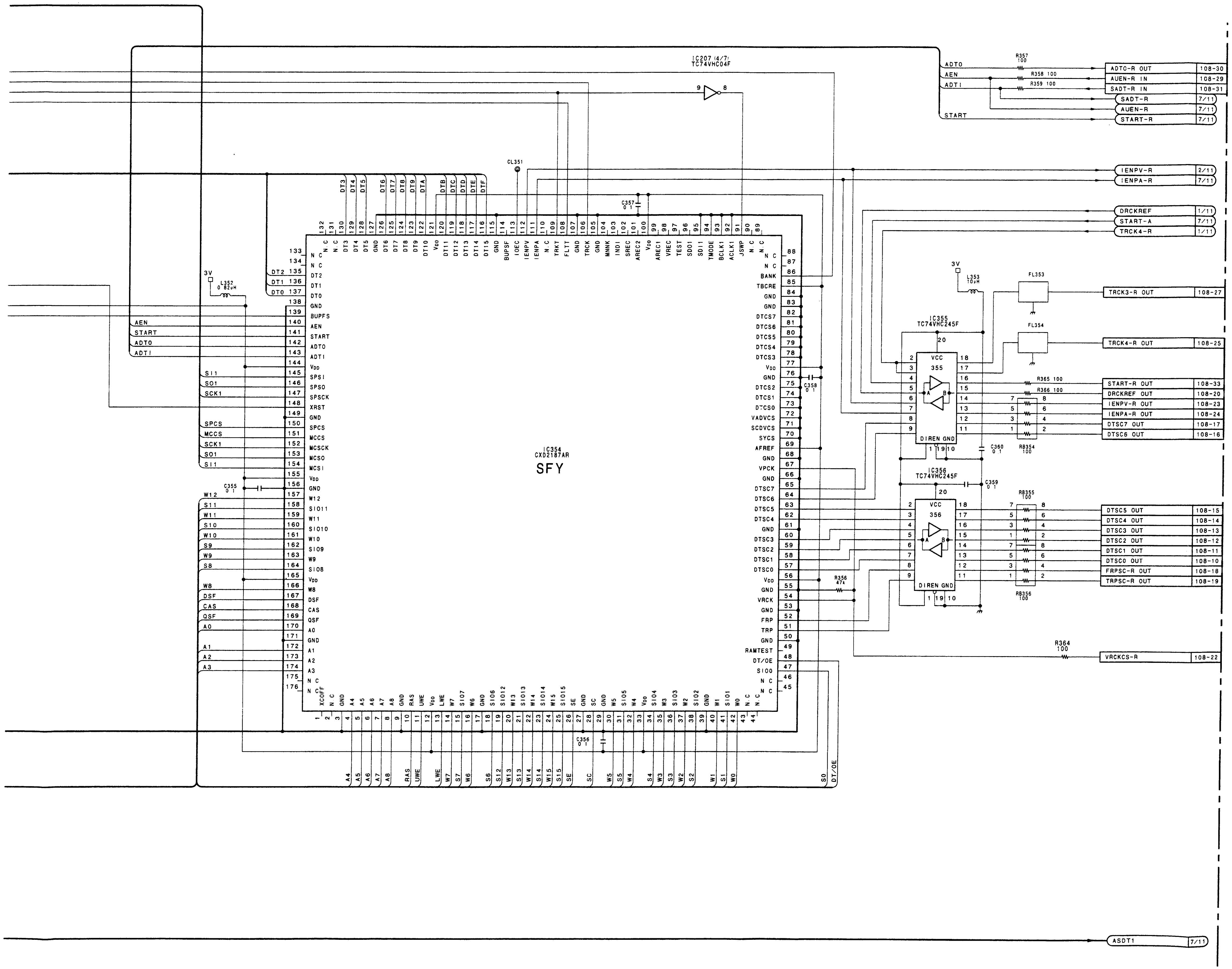

1

2

3

4

5

DV-15/15A (6/11)

BOARD SUFFIX : -13

MODEL DSR-80/80P

DV-15/15A (7/11): VIDEO DIGITAL IN/OUT PROCESS

DSR-80/80P

1

2

3

4

5

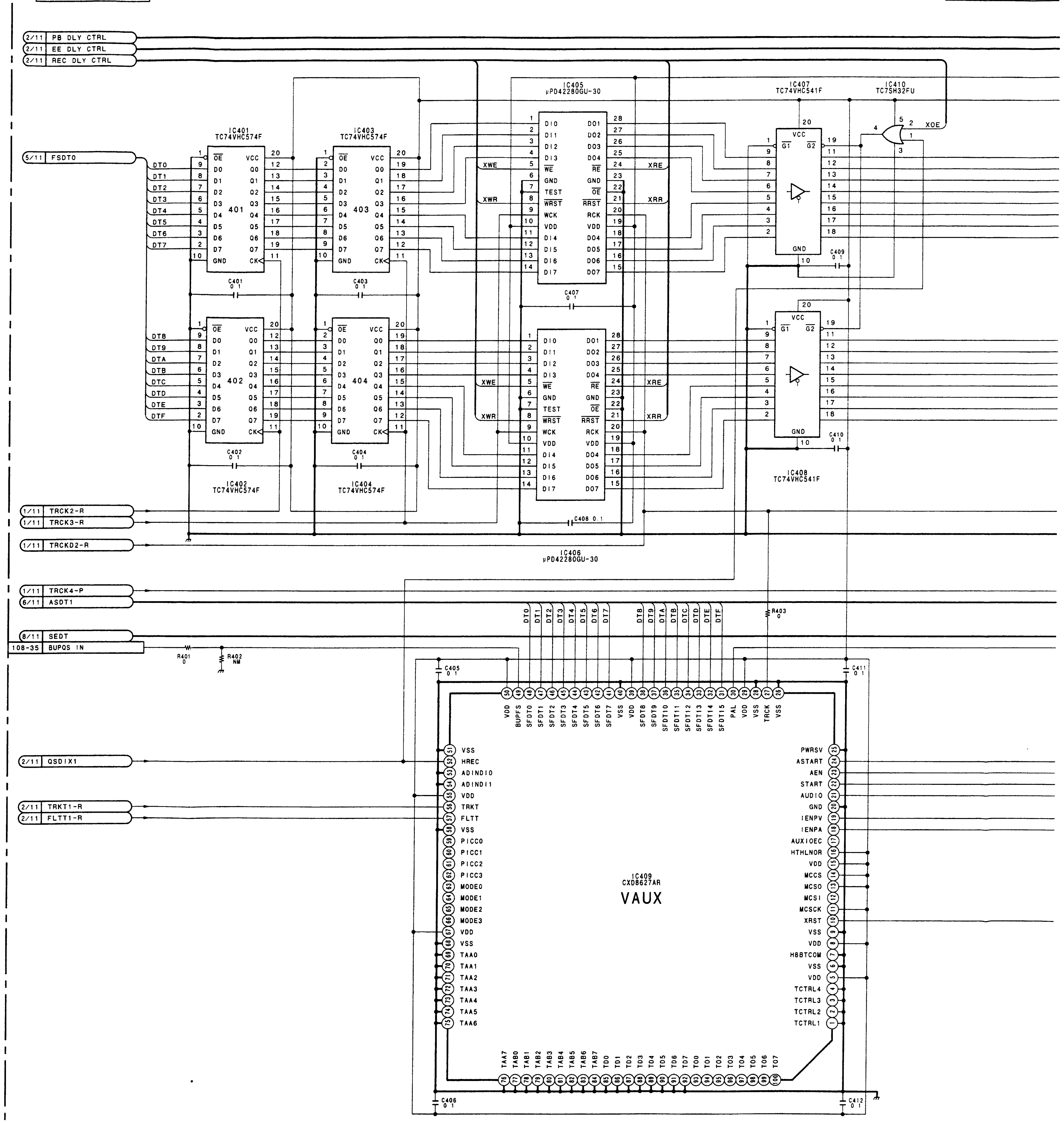

DSR-80/80P

A | B | C | D | E | F | G | H

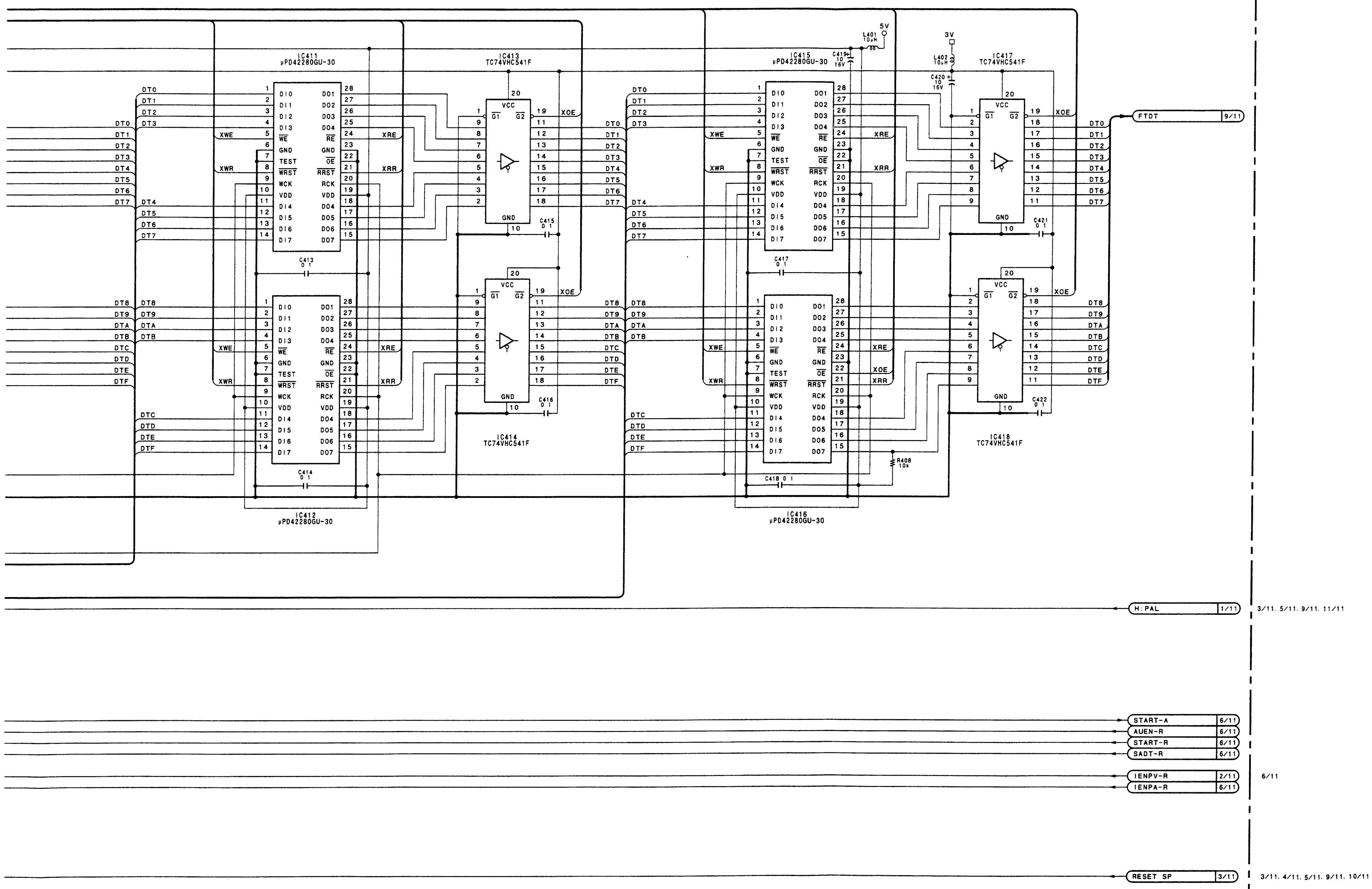

1

2

3

4

5

DV-15/15A (7/11)

BOARD SUFFIX : -13
MODEL DSR-80/80P

DSR-80/80P

DV-15/15A (8/11): VIDEO DIGITAL IN/OUT PROCESS

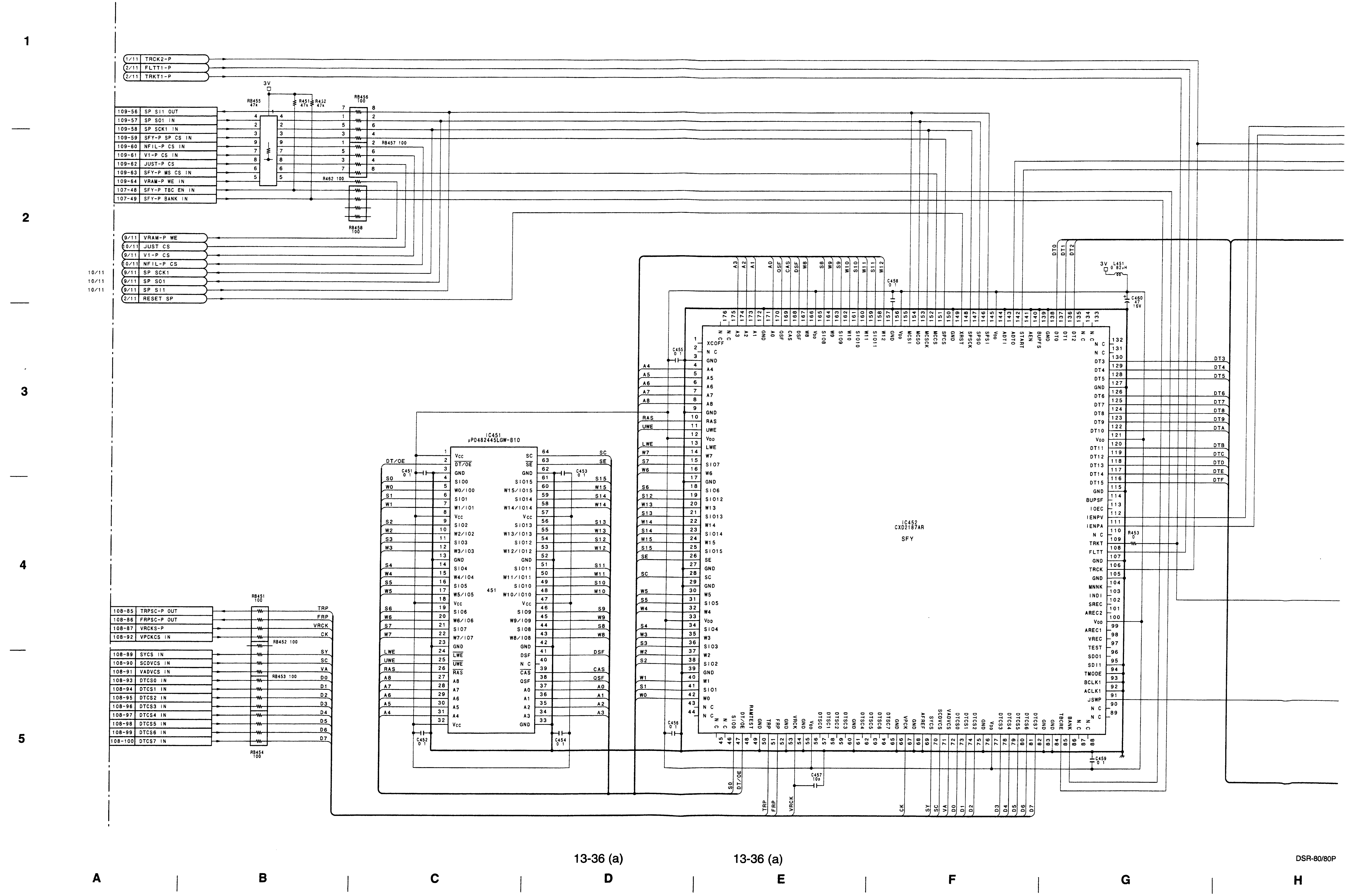

DSR-80/80P

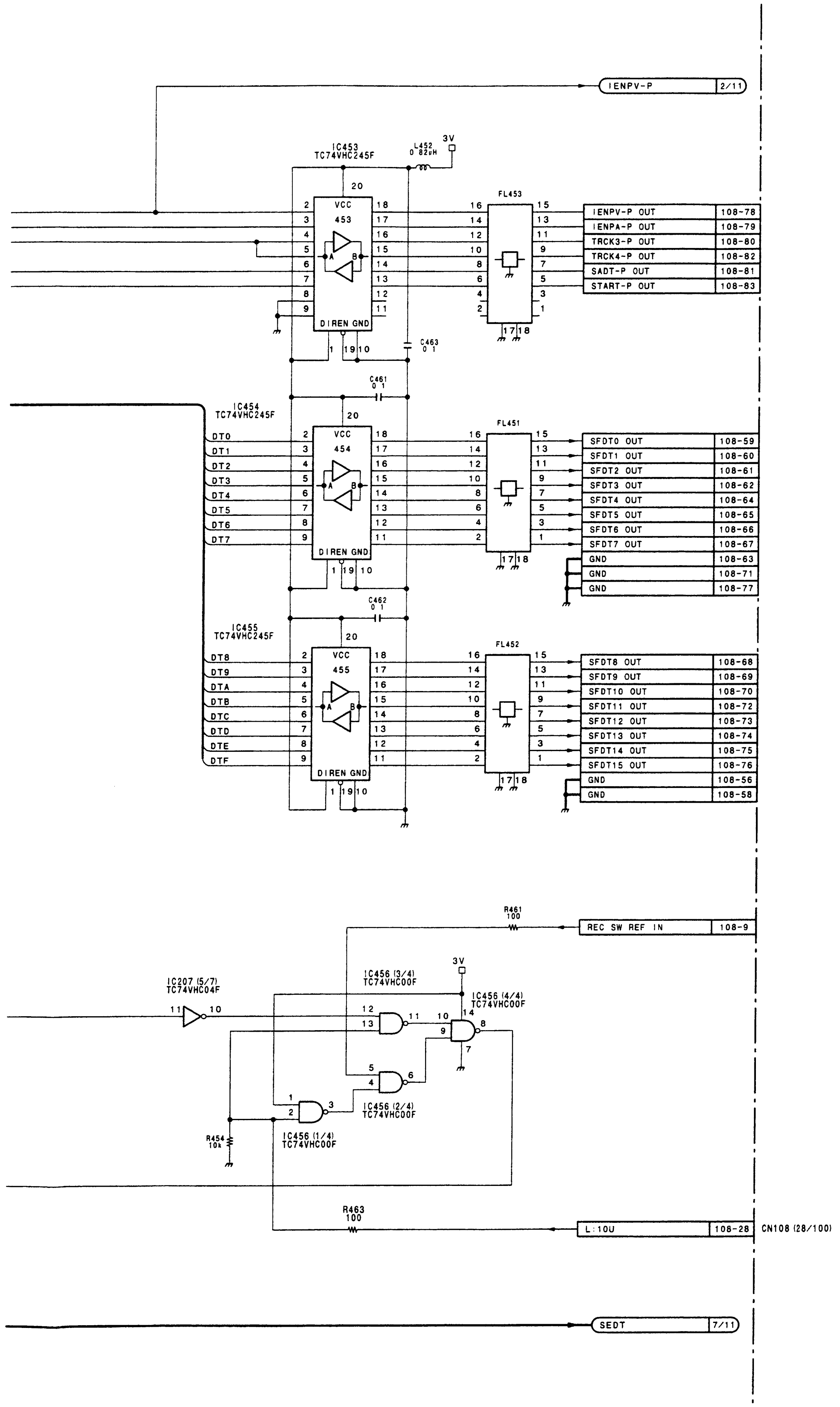

1

2

3

4

5

DV-15/15A (8/11)
BOARD SUFFIX : -13
MODEL DSR-80/80P

DV-15/15A (9/11): VIDEO DIGITAL IN/OUT PROCESS

DSR-80/80P

DSR-80/80P

1

2

3

4

5

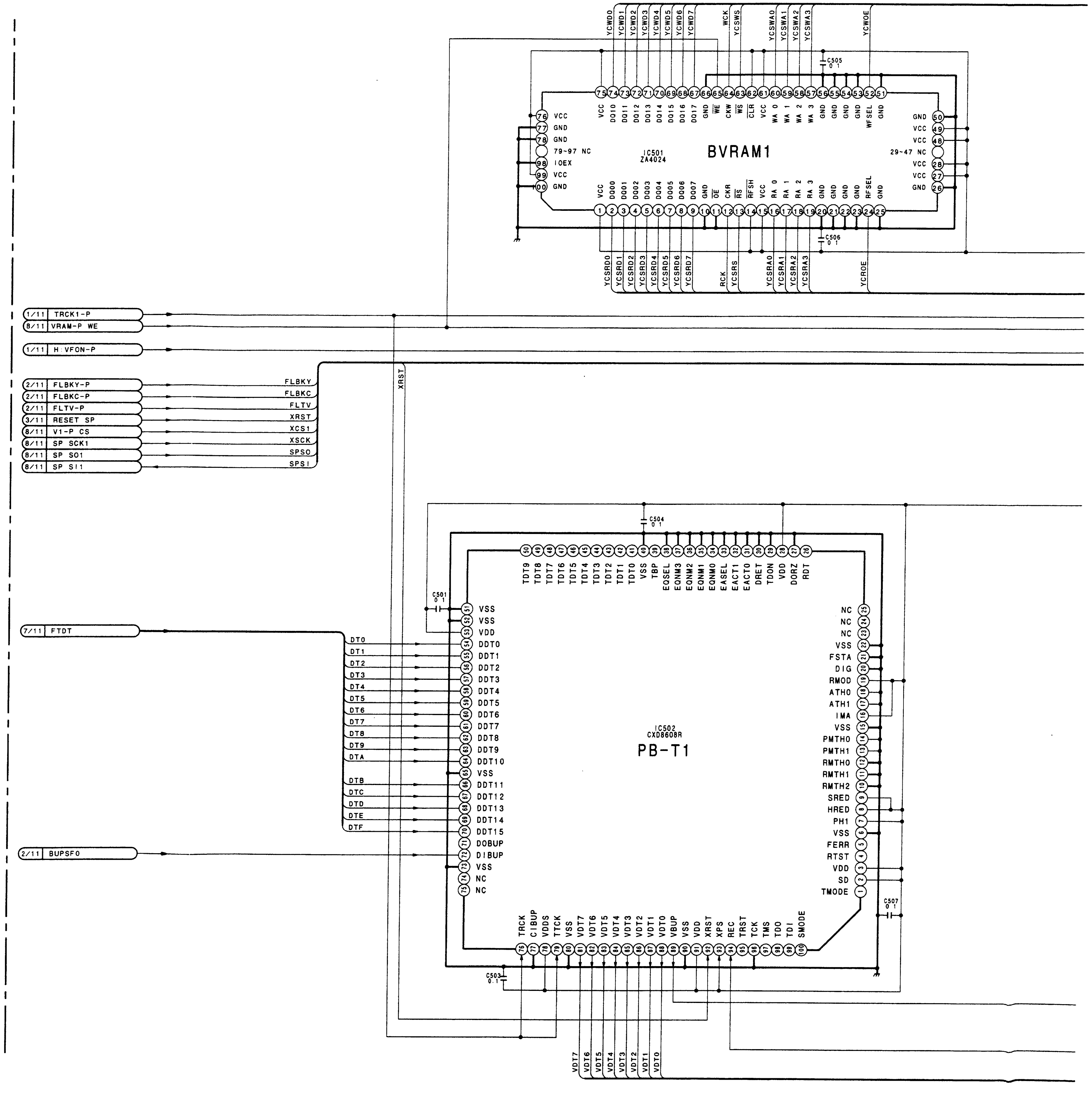

DSR-80/80P

A | B | C | D | E | F | G | H

SONY-SP0754 / DRUCK 208

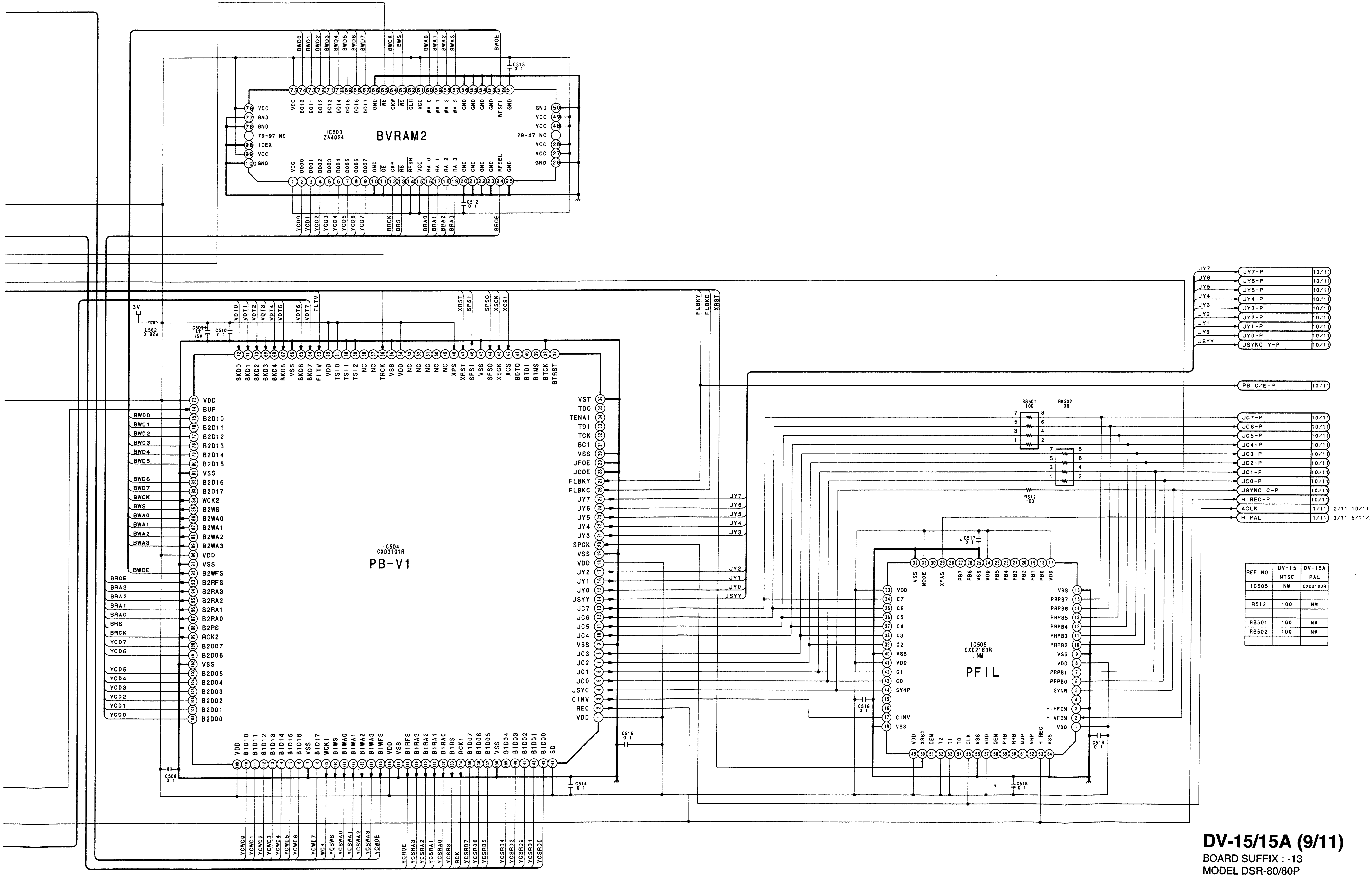

REF NO	DV-15 NTSC	DV-15A PAL
IC505	NM	CXD2183R
R512	100	NM
RB501	100	NM
RB502	100	NM

1 2 3 4 5

DV-15/15A (9/11)

BOARD SUFFIX : -13

MODEL DSR-80/80P

DV-15/15A (10/11): VIDEO DIGITAL IN/OUT PROCESS

DSR-80/80P

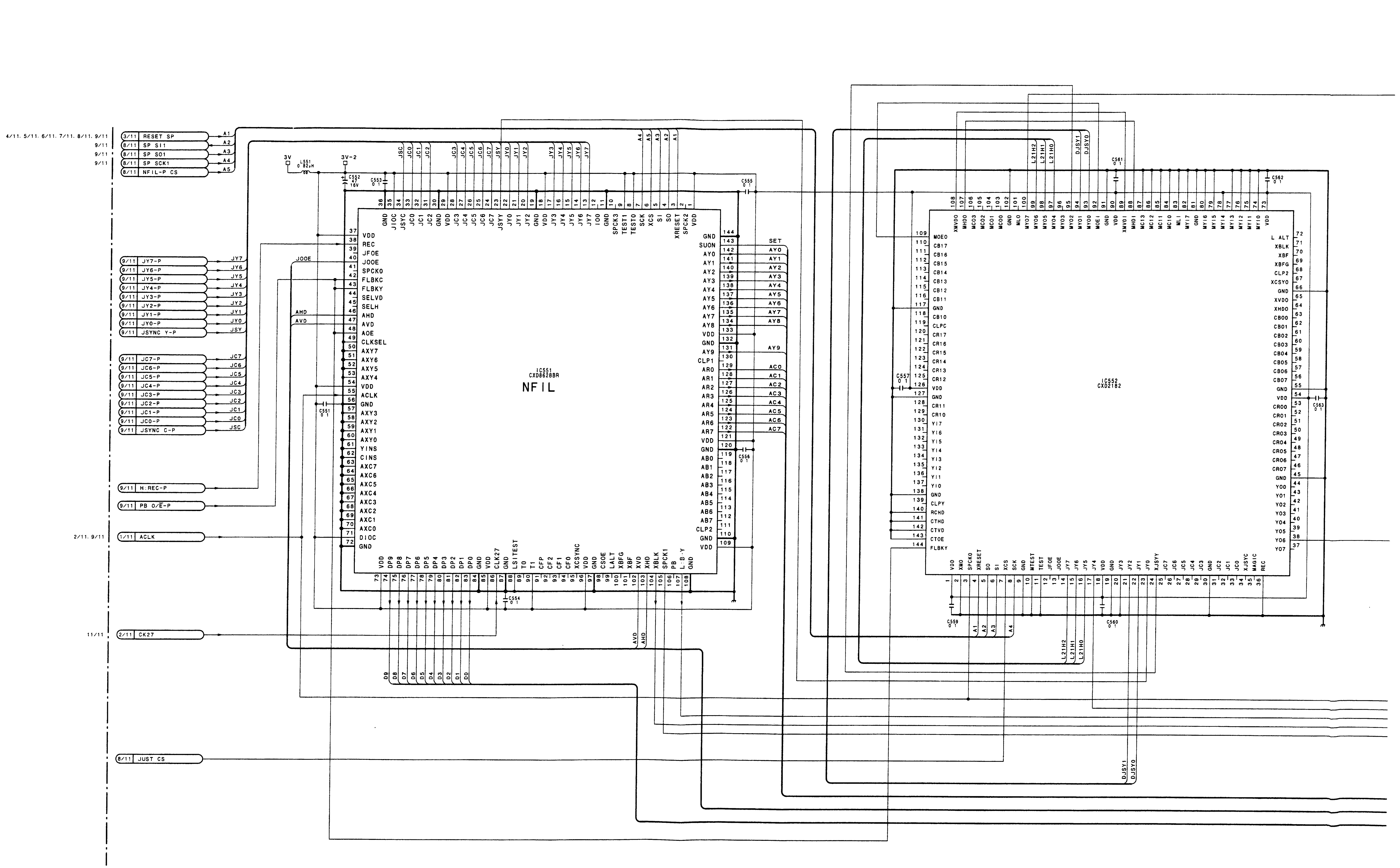

A | B | C | D | E | F | G | H

DSR-80/80P

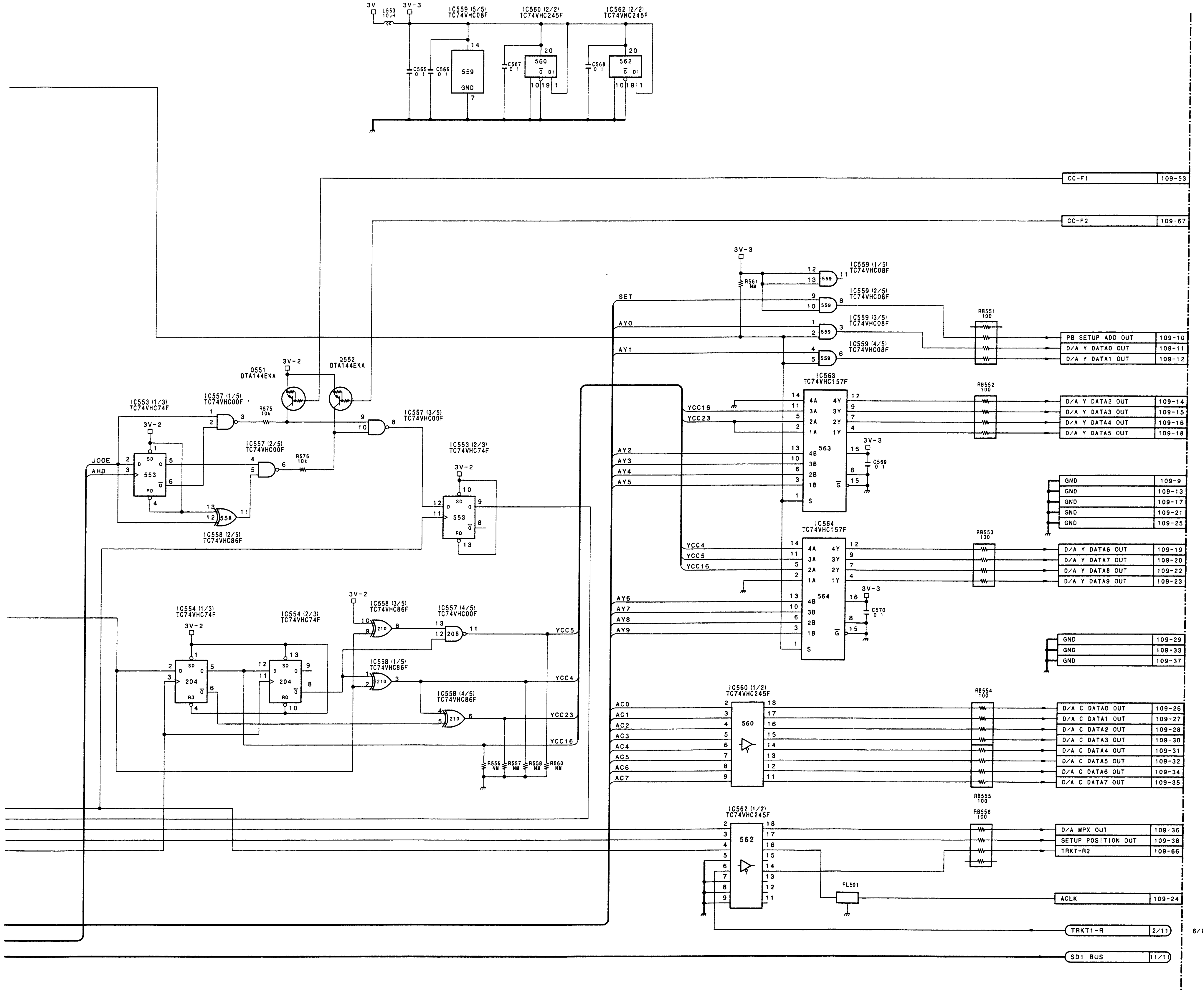

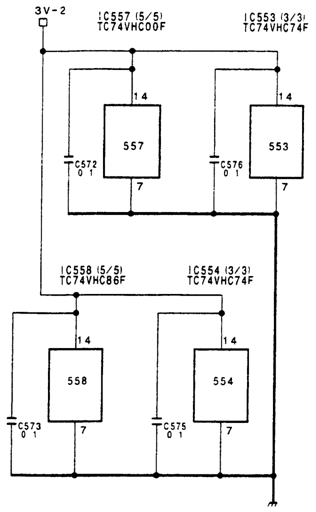

REF NO	DV-15 NTSC	DV-15A PAL
IC552	CXD2182	NM
IC553	TC74VHC74F	NM
IC554	TC74VHC74F	NM
IC557	TC74VHC00F	NM
IC558	TC74VHC86F	NM
Q551	DTA144EKA	NM
Q552	DTA144EKA	NM
R556	NM	0
R557	NM	0
R558	NM	0
R560	NM	0
R561	NM	0
R575	10K	NM
R576	10K	NM
C557	0.1	NM
C559	0.1	NM
C560	0.1	NM
C561	0.1	NM
C562	0.1	NM
C563	0.1	NM
C572	0.1	NM
C573	0.1	NM
C575	0.1	NM
C576	0.1	NM

REF NO.	CHANGED INFORMATION	LOT NO.
L554	DELETED	706-

DV-15/15A (10/11)

BOARD SUFFIX : -13

MODEL DSR-80/80P

DV-15/15A (11/11): VIDEO DIGITAL IN/OUT PROCESS

DSR-80/80P

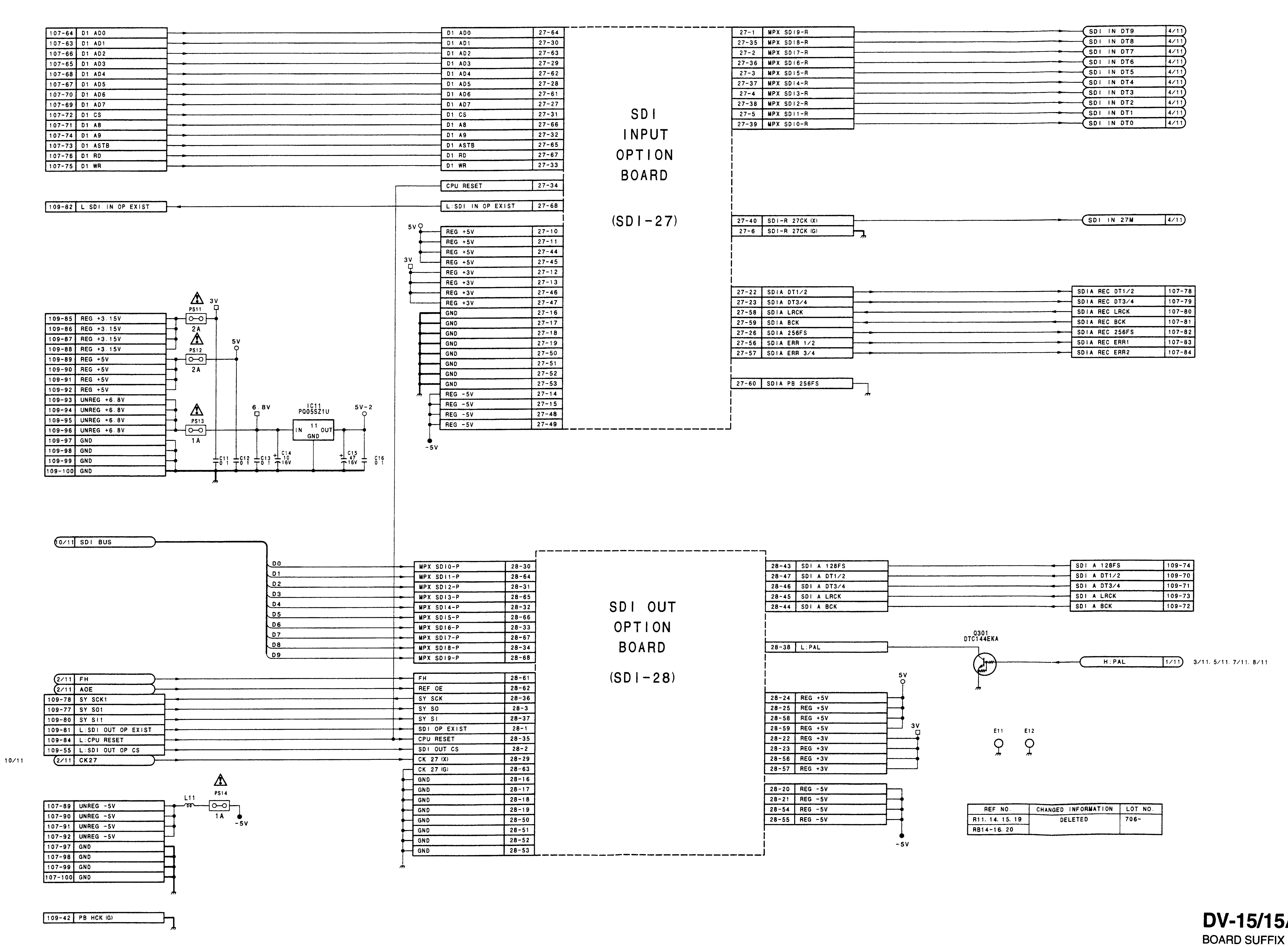

REF NO.	CHANGED INFORMATION	LOT NO.
R11, 14, 15, 19	DELETED	706-
RB14-16, 20		

DV-15/15A (11/11)

BOARD SUFFIX : -13
MODEL DSR-80/80P

DV-15/15A (1/11): VIDEO DIGITAL IN/OUT PROCESS

DSR-80/80P

1

2

3

4

5

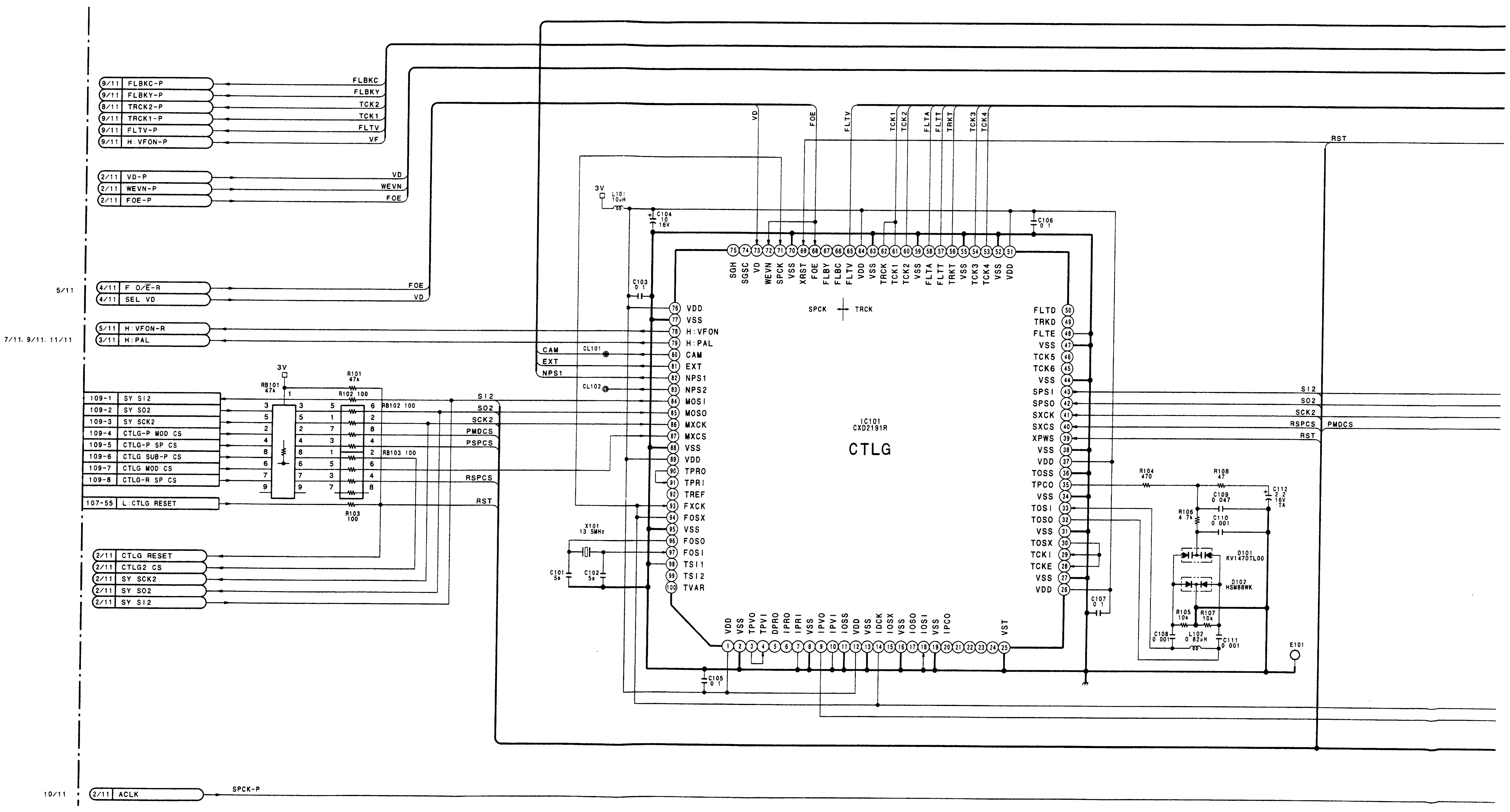

A | B | C | D | E | F | G | H

SONY-SP0754 / DRUCK 214

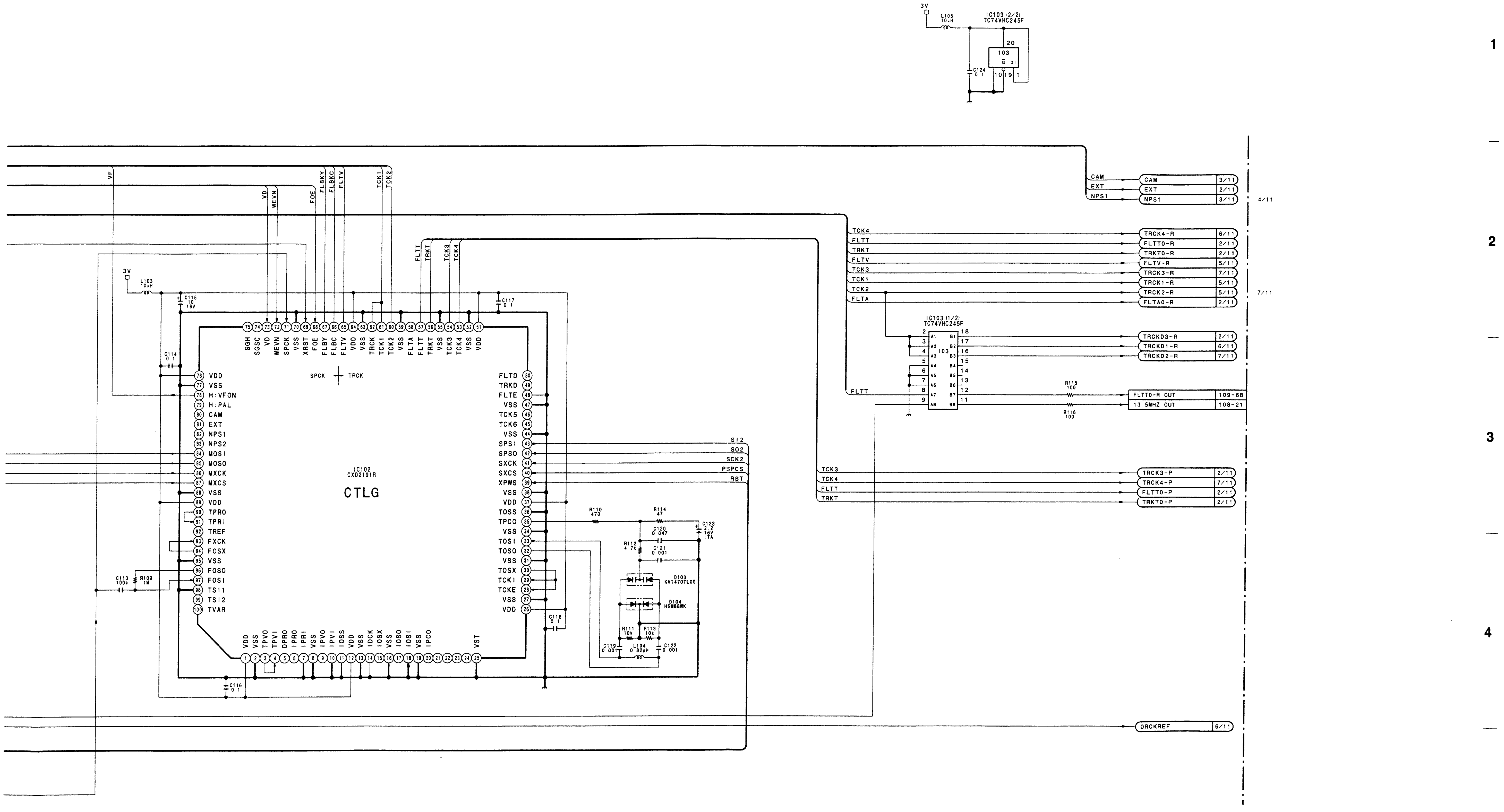

DV-15/15A (1/11)
BOARD SUFFIX : -11, 12
MODEL DSR-80/80P

DSR-80/80P

DV-15/15A: VIDEO DIGITAL IN/OUT PROCESS

DV-15 (3/11)

① TP201 MODE: 75% Color Bar/REC • EE (NTSC)
MODE: 100% Color Bar/REC • EE (PAL)

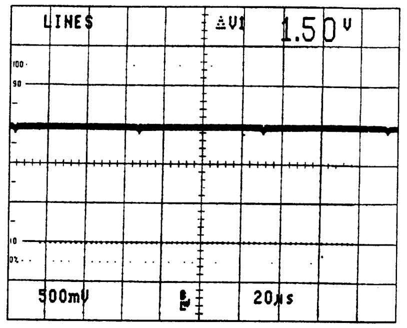

DV-15 (4/11)

① TP251 MODE: 75% Color Bar/REC • EE (NTSC)

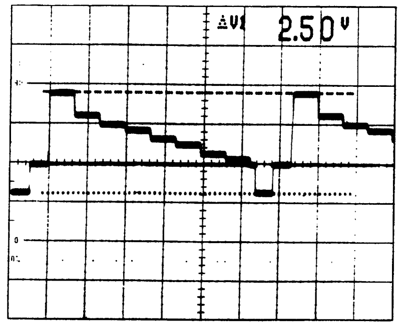

② TP252 MODE: 75% Color Bar/REC • EE (NTSC)
MODE: 100% Color Bar/REC • EE (PAL)

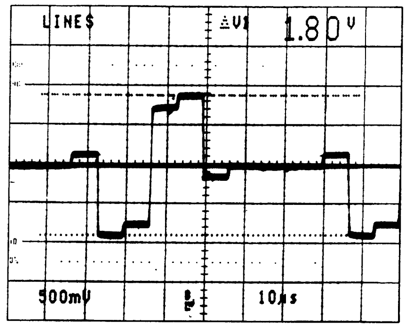

① TP251 MODE: 100% Color Bar/REC • EE (PAL)

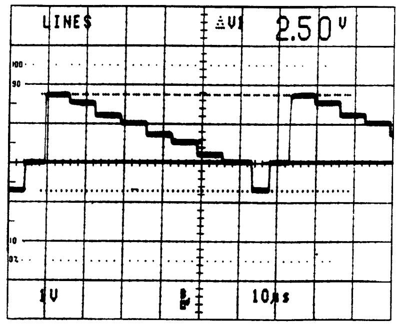

③ TP253 MODE: 75% Color Bar/REC • EE (NTSC)
MODE: 100% Color Bar/REC • EE (PAL)

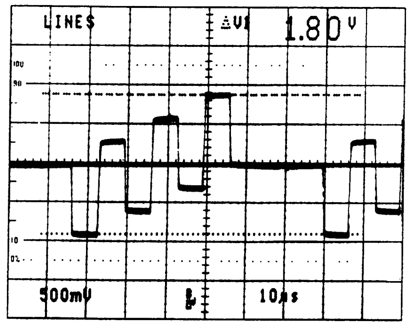

DV-15/15A (2/11): VIDEO DIGITAL IN/OUT PROCESS

DSR-80/80P

DSR-80/80P

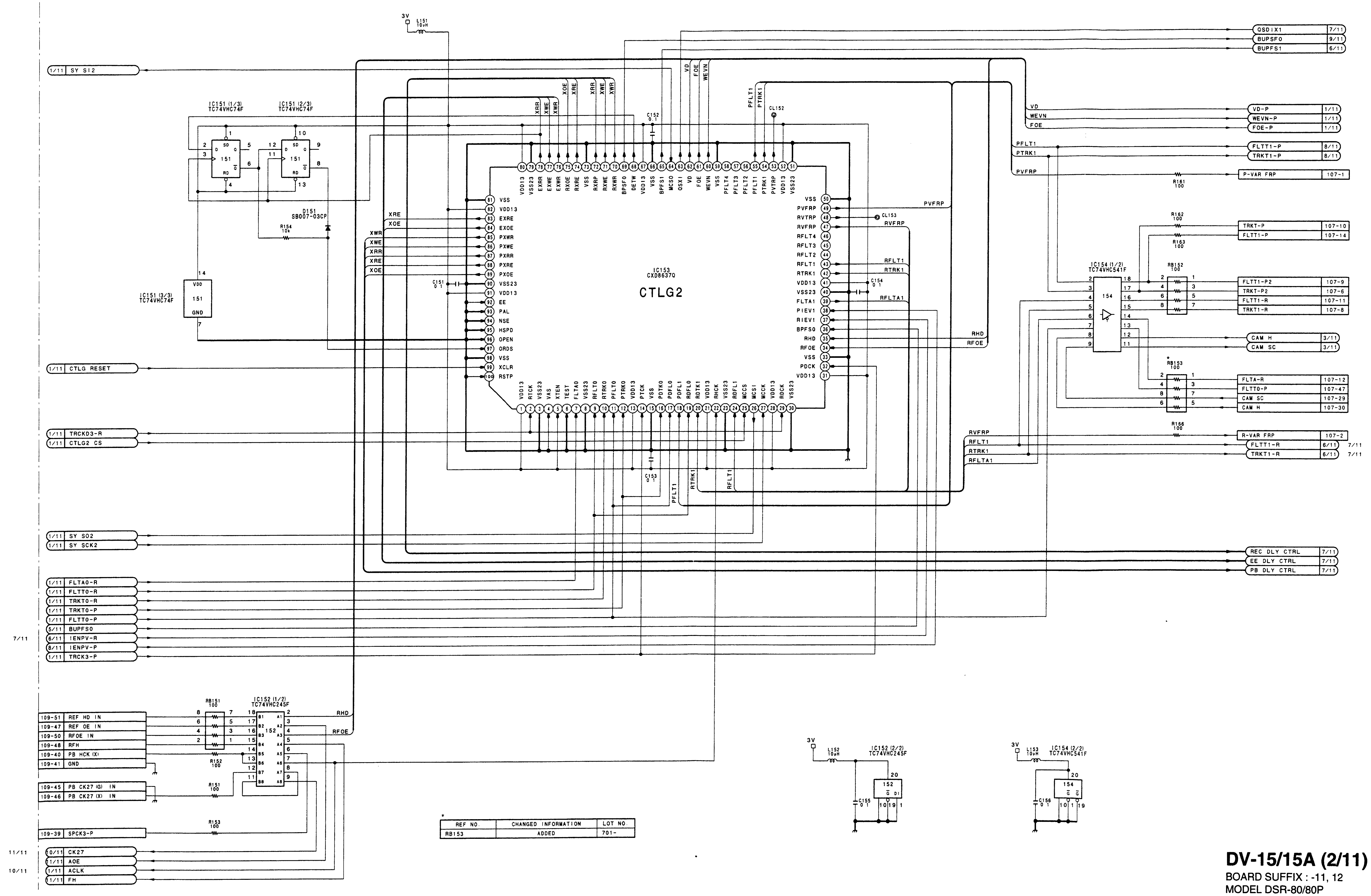

REF NO.	CHANGED INFORMATION	LOT NO.
RB153	ADDED	701-

DV-15/15A (2/11)

BOARD SUFFIX : -11, 12
MODEL DSR-80/80P

DV-15/15A (3/11): VIDEO DIGITAL IN/OUT PROCESS

DSR-80/80P

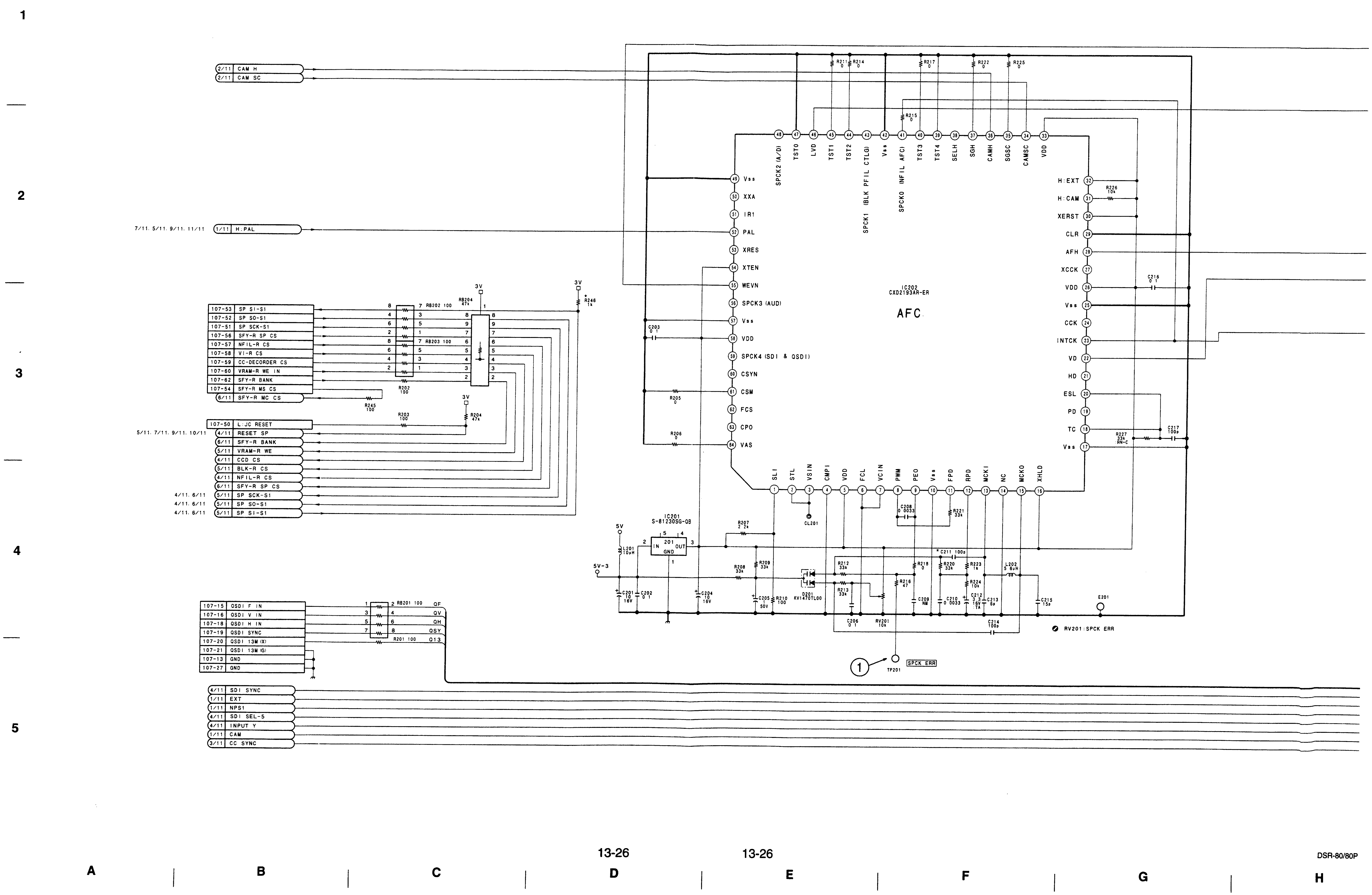

 DV-15/15A (3/11)

 DSR-80/80P

1

2

3

4

5

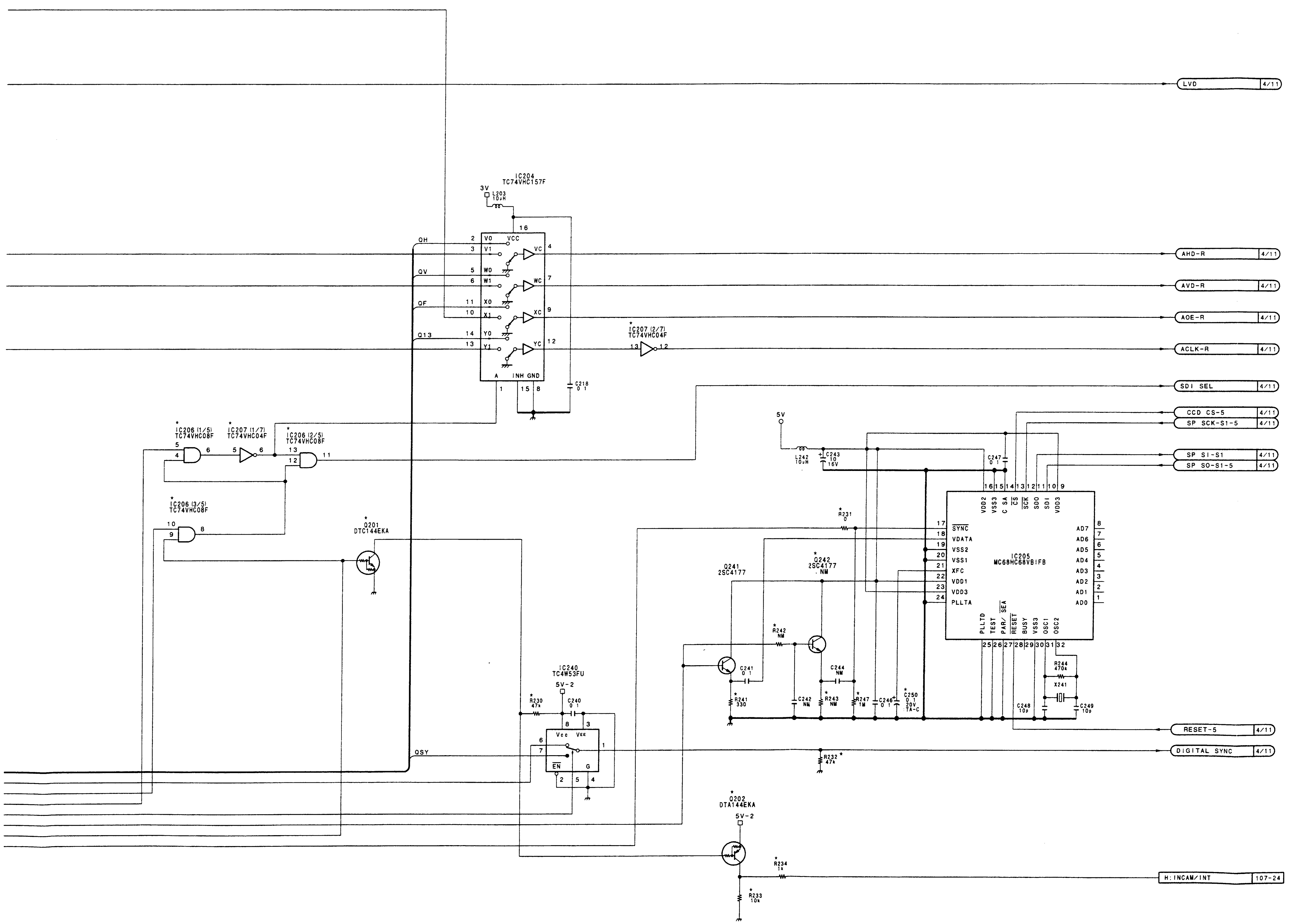

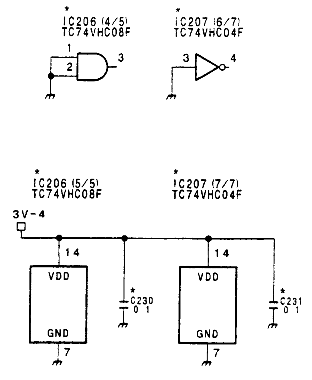

REF NO	DV-15 NTSC	DV-15A PAL
R241	330	NM
R244	470K	NM
R231	0	NM
C241	0.1	NM
C243	10/16V	NM
C246	0.1	NM
C247	0.1	NM
C248	10P	NM
C249	10P	NM
C250	0.1/20V	NM
X241	3.58M	NM
Q241	2SC4177	NM
IC205	MC68HC 68V81FB	NM

*

REF NO.	CHANGED INFORMATION	LOT NO.
C211	470p → 100p	701-
C230, 231	ADDED	
C250		
IC206, 207		
Q201, 202		
Q242	DELETED	
R230, 232	ADDED	
R231, 233, 234		
R241		
R242	DELETED	
R243	ADDED	701
R243	DELETED	701-
R246	ADDED	
R247	ADDED	701
R247	DELETED	701-

DV-15/15A (3/11)

BOARD SUFFIX : -11, 12
MODEL DSR-80/80P

 13-27

I | J | K | L | M | N | O | P

SONY-SP0754 / DRUCK 219

DV-15/15A (4/11): VIDEO DIGITAL IN/OUT PROCESS

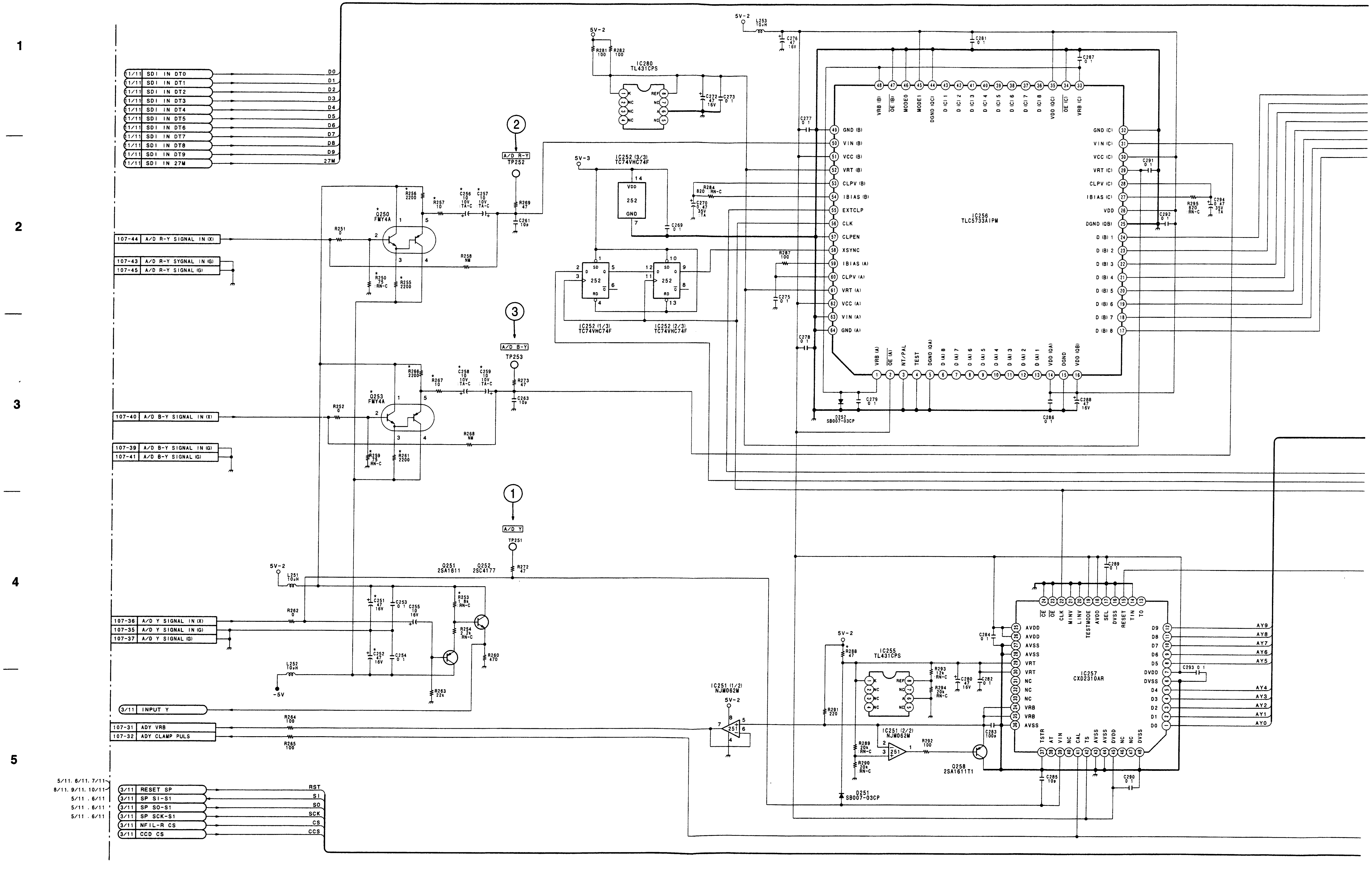

A | B | C | D | E | F | G | H

SONY-SP0754 / DRUCK 220

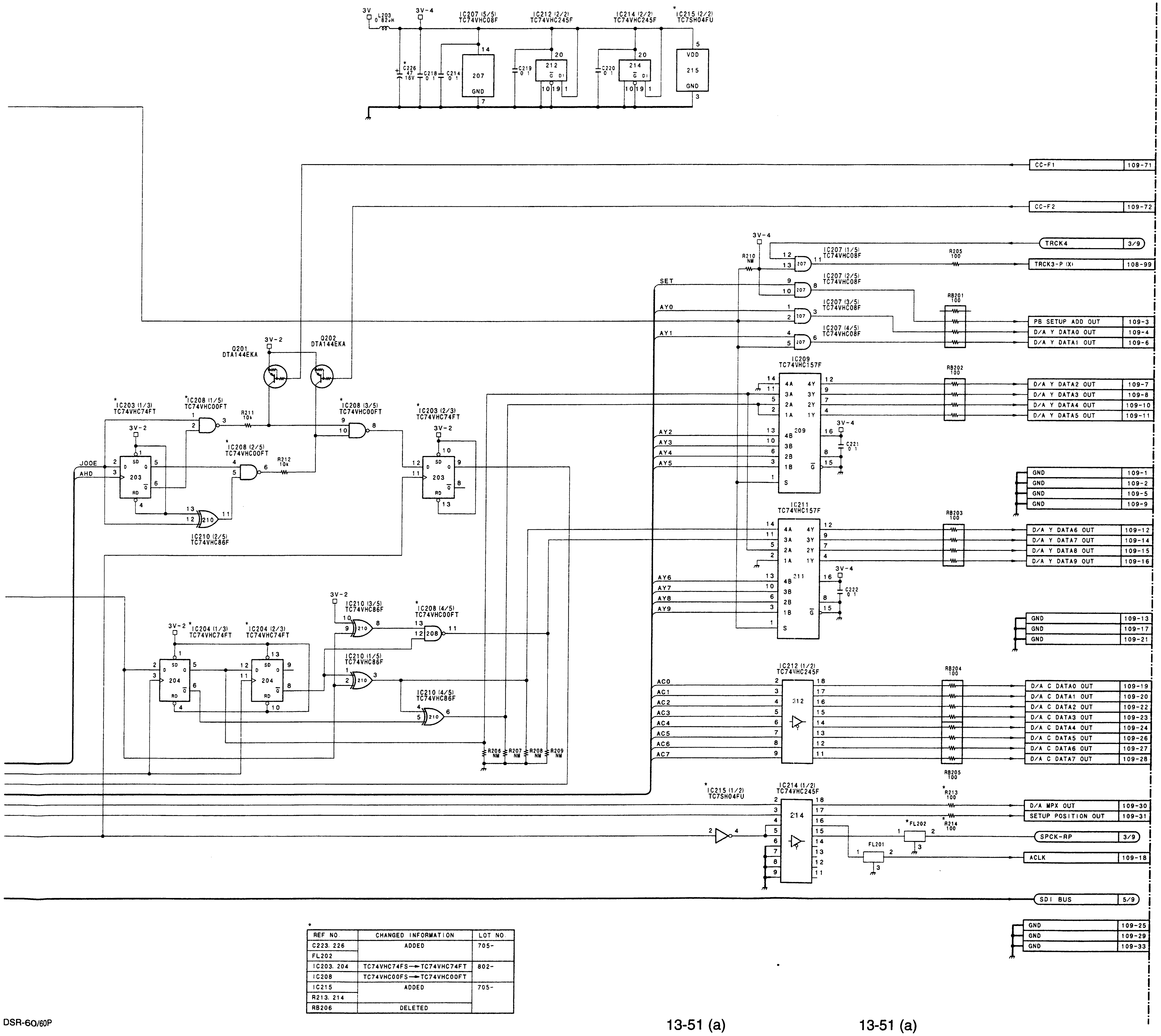

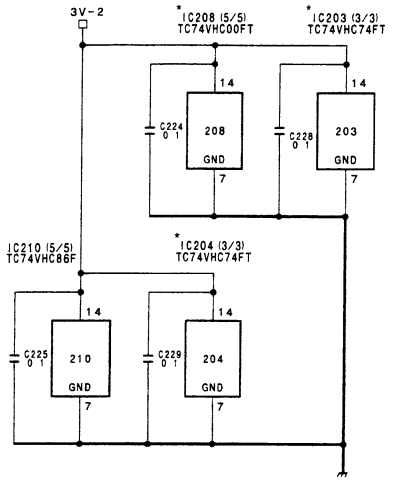

REF NO	DV-17 NTSC	DV-17A PAL
IC202	CXD2182	NM
IC203	TC74VHC74FS	NM
IC204	TC74VHC74FS	NM
IC208	TC74VHC00FS	NM
IC210	TC74VHC86F	NM
Q201	DTA144EKA	NM
Q202	DTA144EKA	NM
R206	NM	0
R207	NM	0
R208	NM	0
R209	NM	0
R210	NM	0
R211	10K	NM
R212	10K	NM
C207	0.1	NM
C209	0.1	NM
C210	0.1	NM
C211	0.1	NM
C212	0.1	NM
C213	0.1	NM
C224	0.1	NM
C225	0.1	NM
C228	0.1	NM
C229	0.1	NM

*

REF NO.	CHANGED INFORMATION	LOT NO.
C223. 226	ADDED	705-
FL202		
IC203. 204	TC74VHC74FS→TC74VHC74FT	802-
IC208	TC74VHC00FS→TC74VHC00FT	
IC215	ADDED	705-
R213. 214		
RB206	DELETED	

DV-17/17A (4/9)
BOARD SUFFIX : -12, 13
MODEL DSR-60/60P

DV-17/17A (5/9): VIDEO/AUDIO DIGITAL PROCESS
AUDIO ANALOG PROCESS

DSR-60/60P

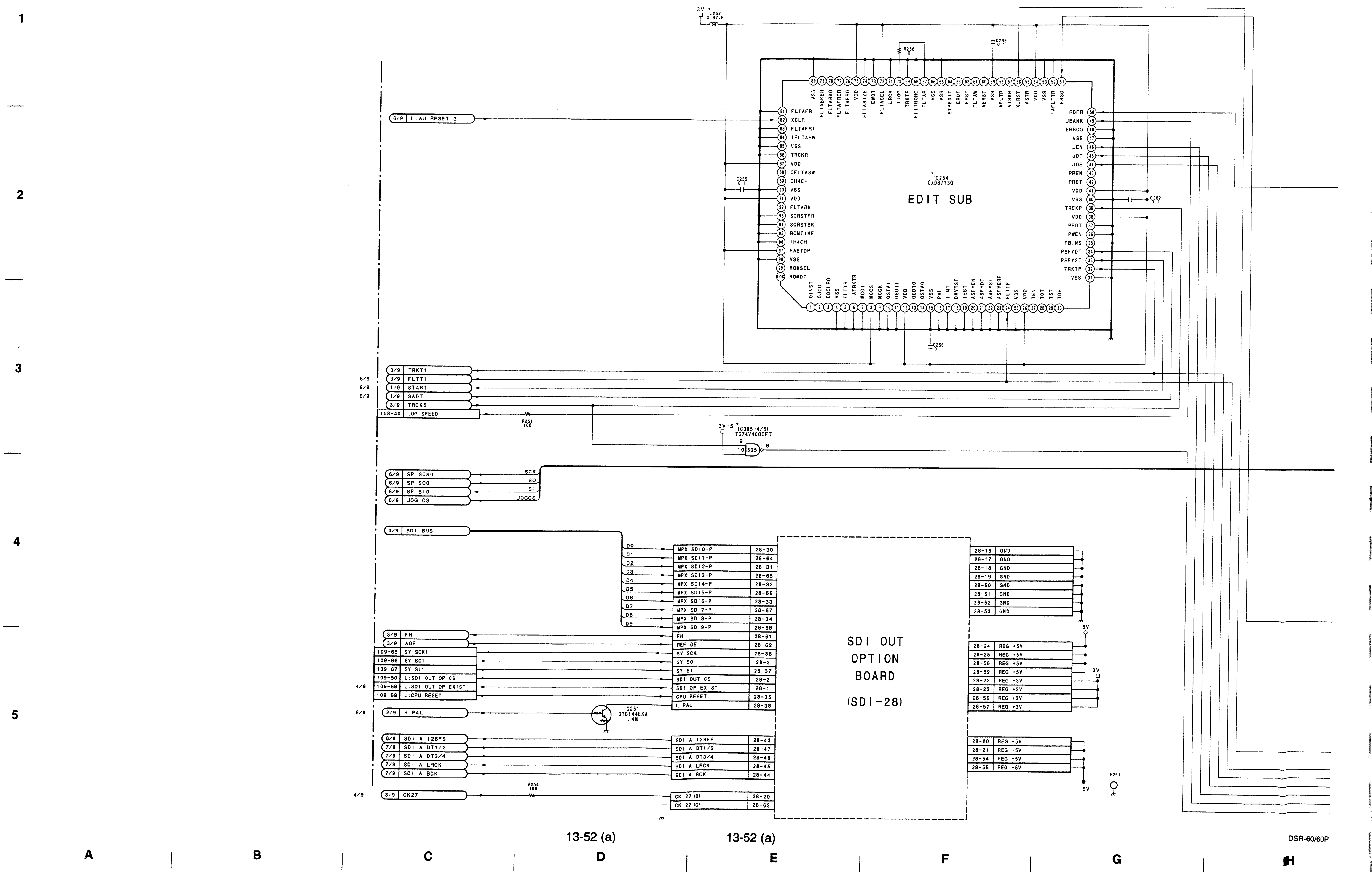

DSR-60/60P

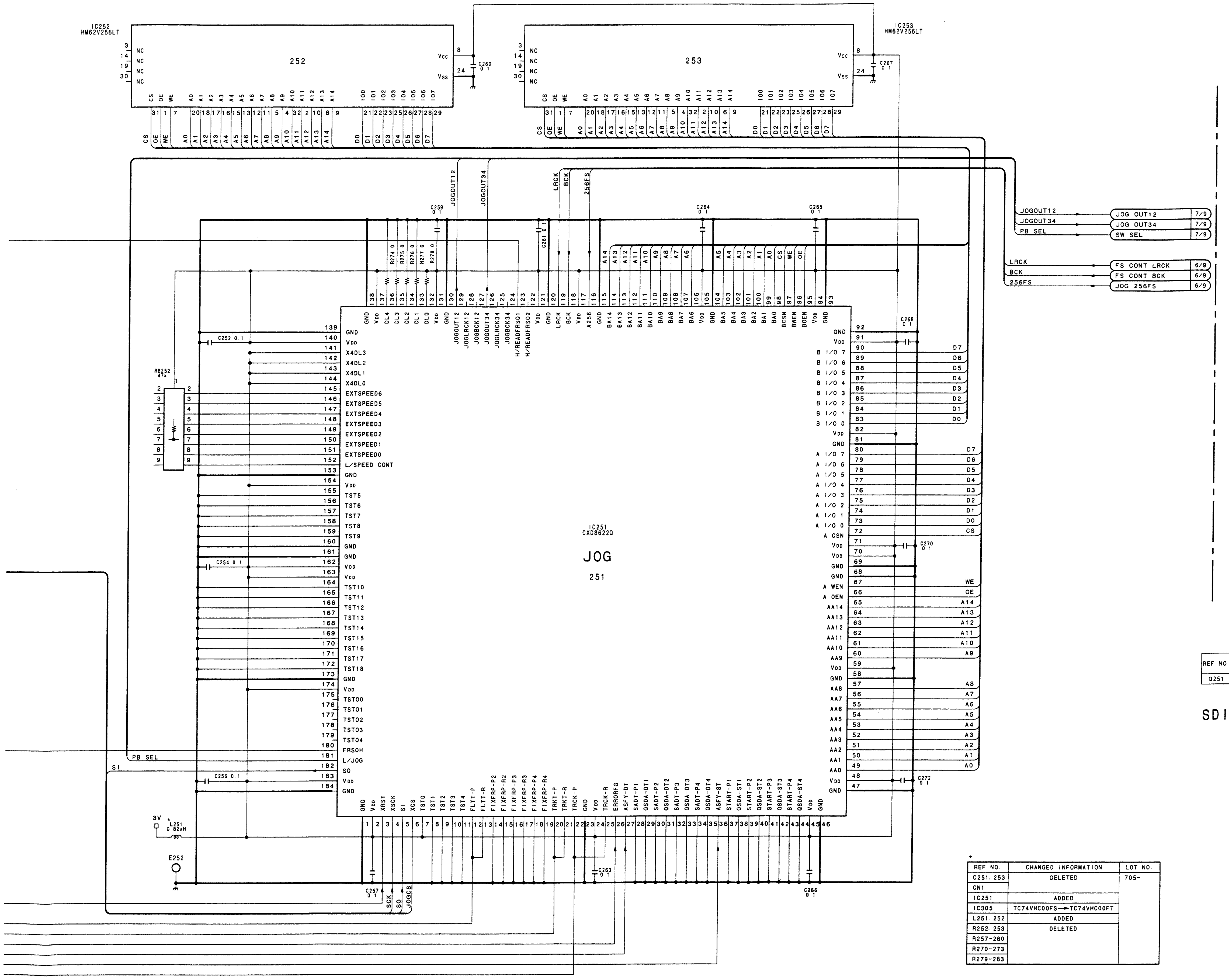

REF NO	DV-17 NTSC	DV-17A PAL
Q251	NM	DTC144EKA

SDI OUT/JOG

*

REF NO.	CHANGED INFORMATION	LOT NO.
C251, 253	DELETED	705-
CN1		
IC251	ADDED	
IC305	TC74VHC00FS→TC74VHC00FT	
L251, 252	ADDED	
R252, 253	DELETED	
R257-260		
R270-273		
R279-283		

DV-17/17A (5/9)
BOARD SUFFIX : -12, 13
MODEL DSR-60/60P

 DV-17/17A (6/9)

 DSR-60/60P

DV-17/17A (6/9): VIDEO/AUDIO DIGITAL PROCESS
AUDIO ANALOG PROCESS

① TP301 MODE: 75% Color Bar/PB (NTSC)
MODE: 100% Color Bar/PB (PAL)

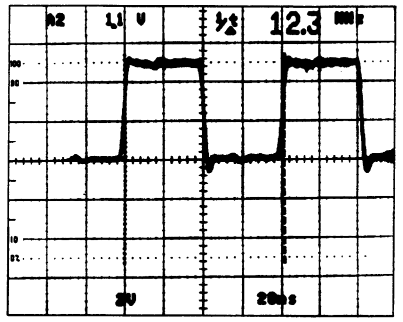

(fc = 48 KHz)

② TP302 MODE: 75% Color Bar/PB (NTSC)
MODE: 100% Color Bar/PB (PAL)

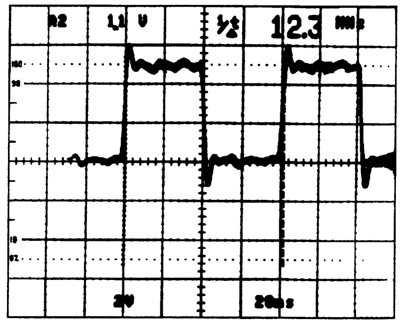

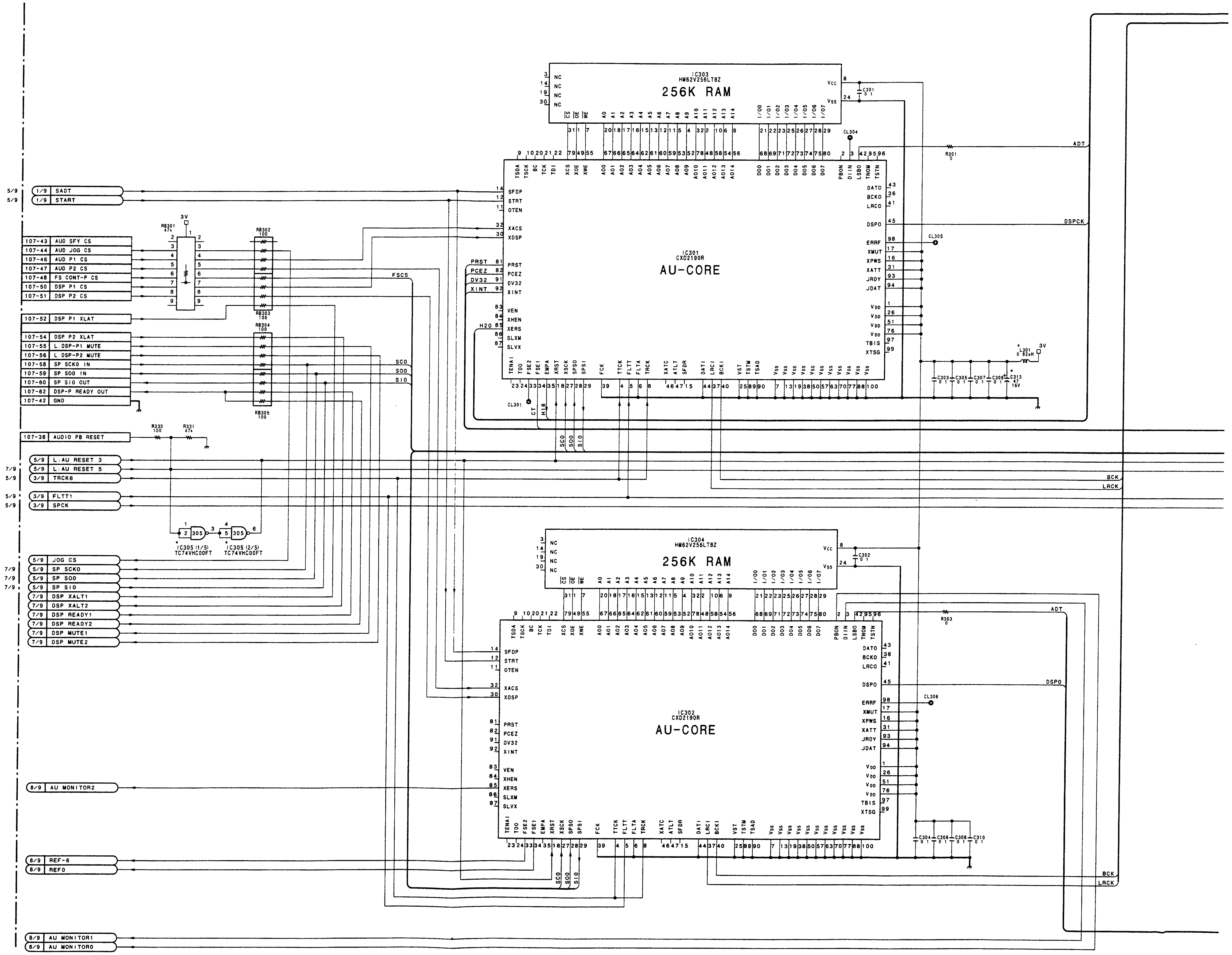

A B C D E F G H

SONY-SP0754 / DRUCK 224

DSR-60/60P

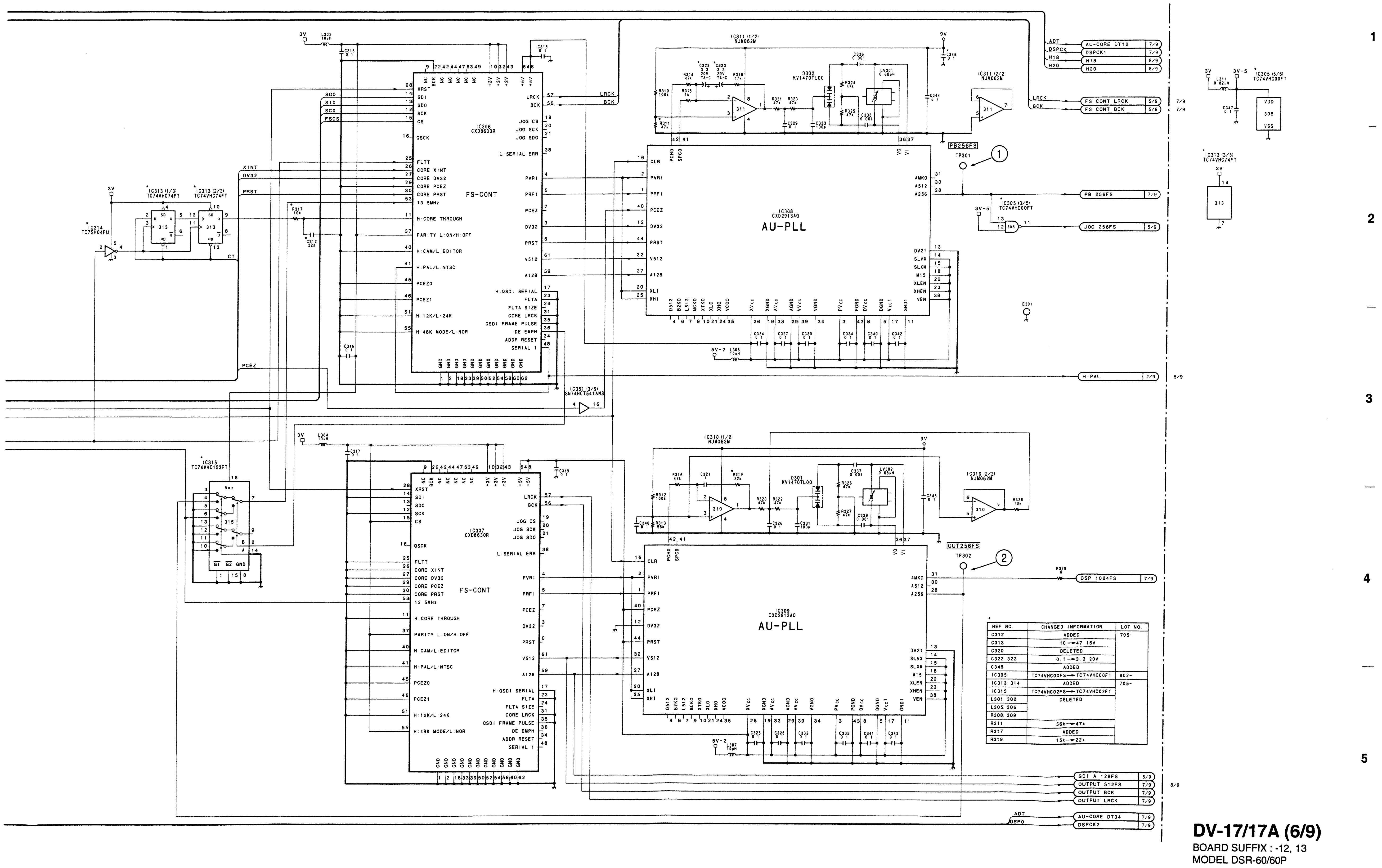

*

REF NO.	CHANGED INFORMATION	LOT NO.
C312	ADDED	705-
C313	10→47 16V	
C320	DELETED	
C322. 323	0.1→3.3 20V	
C348	ADDED	
IC305	TC74VHC00FS→TC74VHC00FT	802-
IC313. 314	ADDED	705-
IC315	TC74VHC02FS→TC74VHC02FT	
L301. 302	DELETED	
L305. 306		
R308. 309		
R311	56k→47k	
R317	ADDED	
R319	15k→22k	

1
2
3
4
5

DV-17/17A (6/9)

BOARD SUFFIX : -12, 13
MODEL DSR-60/60P

DV-17/17A (7/9): VIDEO/AUDIO DIGITAL PROCESS
AUDIO ANALOG PROCESS

1

① TP351　MODE: 75% Color Bar/PB (NTSC)
MODE: 100% Color Bar/PB (PAL)

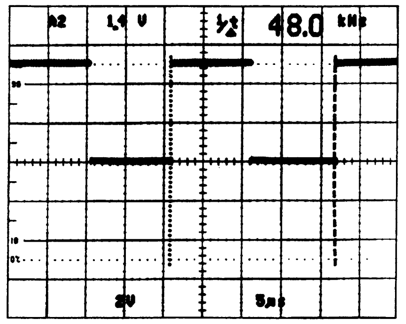

(fc = 48 KHz)

2

② TP352　MODE: 75% Color Bar/PB (NTSC)
MODE: 100% Color Bar/PB (PAL)

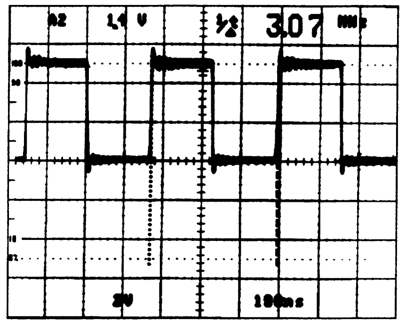

(fc = 48 KHz)

3

③ TP353　MODE: 75% Color Bar/PB (NTSC)
MODE: 100% Color Bar/PB (PAL)

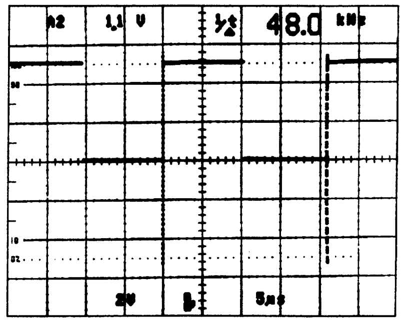

4

④ TP354　MODE: 75% Color Bar/PB (NTSC)
MODE: 100% Color Bar/PB (PAL)

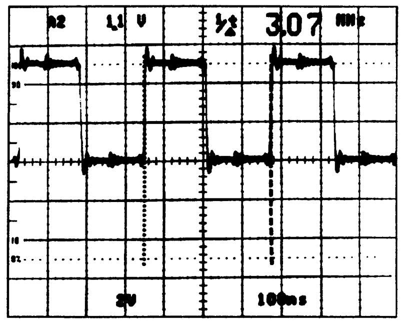

5

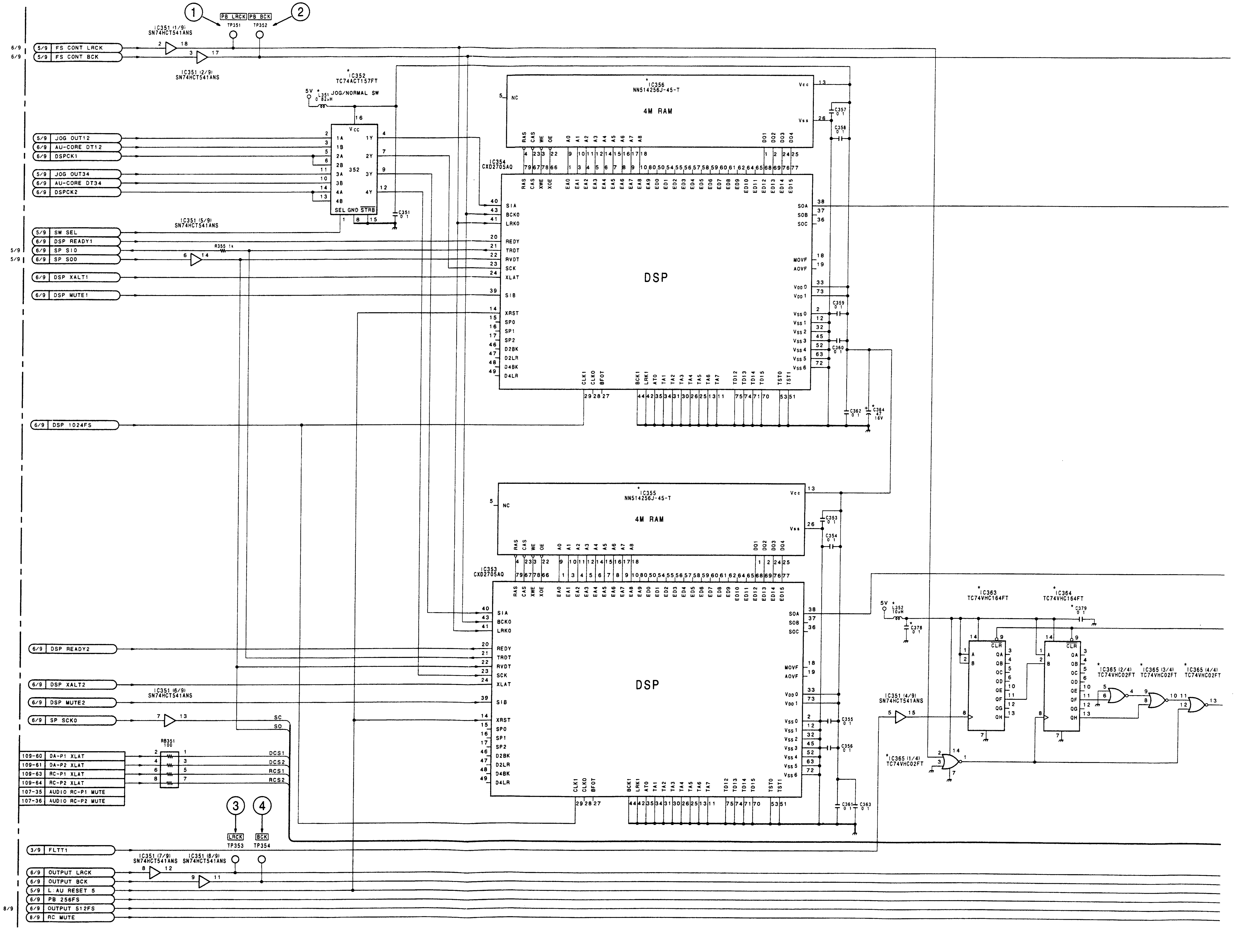

DSR-60/60P

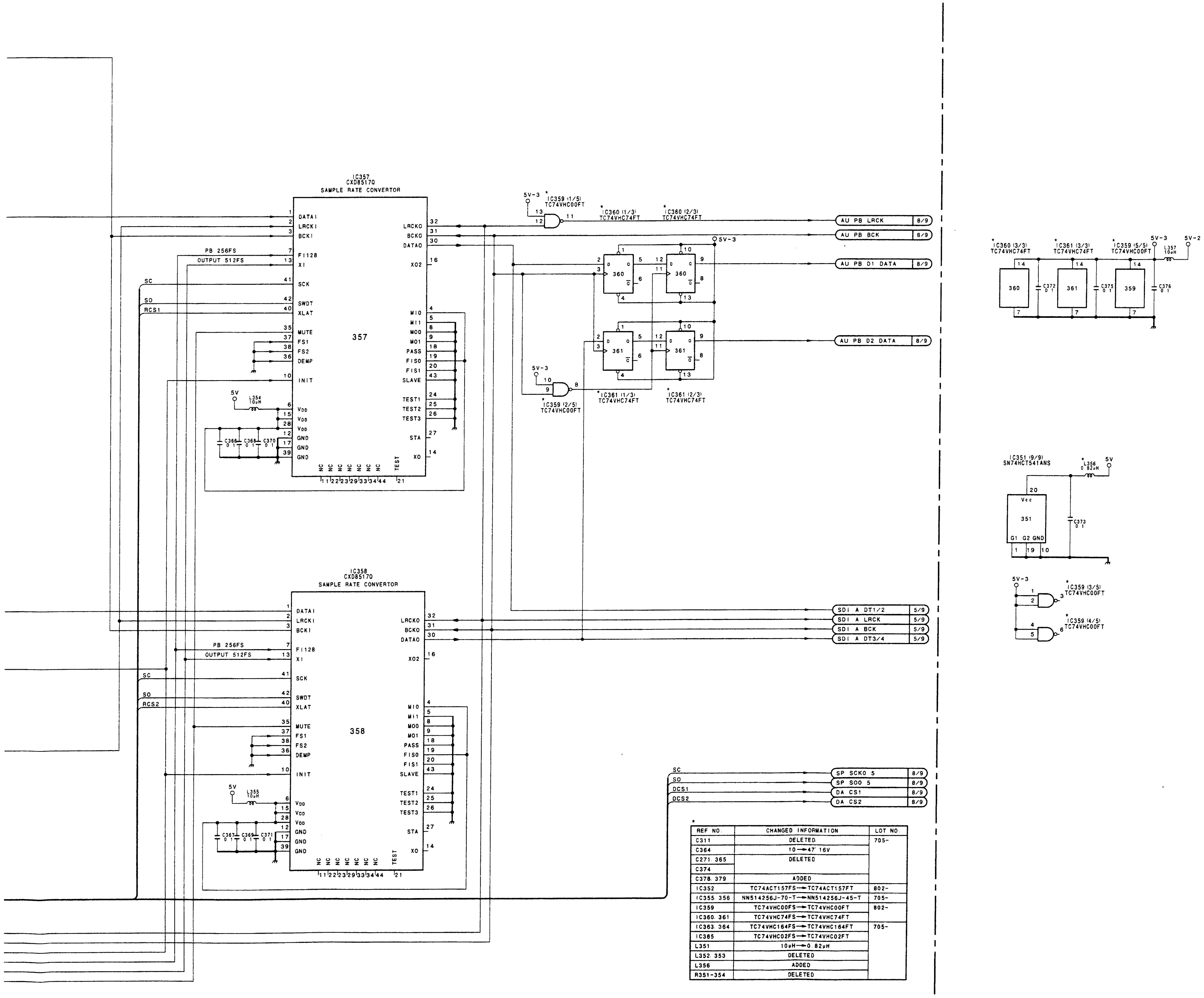

*

REF NO.	CHANGED INFORMATION	LOT NO.
C311	DELETED	705-
C364	10 → 47 16V	
C271. 365	DELETED	
C374		
C378. 379	ADDED	
IC352	TC74ACT157FS → TC74ACT157FT	802-
IC355. 356	NN514256J-70-T → NN514256J-45-T	705-
IC359	TC74VHC00FS → TC74VHC00FT	802-
IC360. 361	TC74VHC74FS → TC74VHC74FT	
IC363. 364	TC74VHC164FS → TC74VHC164FT	705-
IC365	TC74VHC02FS → TC74VHC02FT	
L351	10μH → 0.82μH	
L352. 353	DELETED	
L356	ADDED	
R351-354	DELETED	

1 — 2 — 3 — 4 — 5

DV-17/17A (7/9)

BOARD SUFFIX : -12, 13
MODEL DSR-60/60P

DSR-60/60P

**DV-17/17A (8/9): VIDEO/AUDIO DIGITAL PROCESS
AUDIO ANALOG PROCESS**

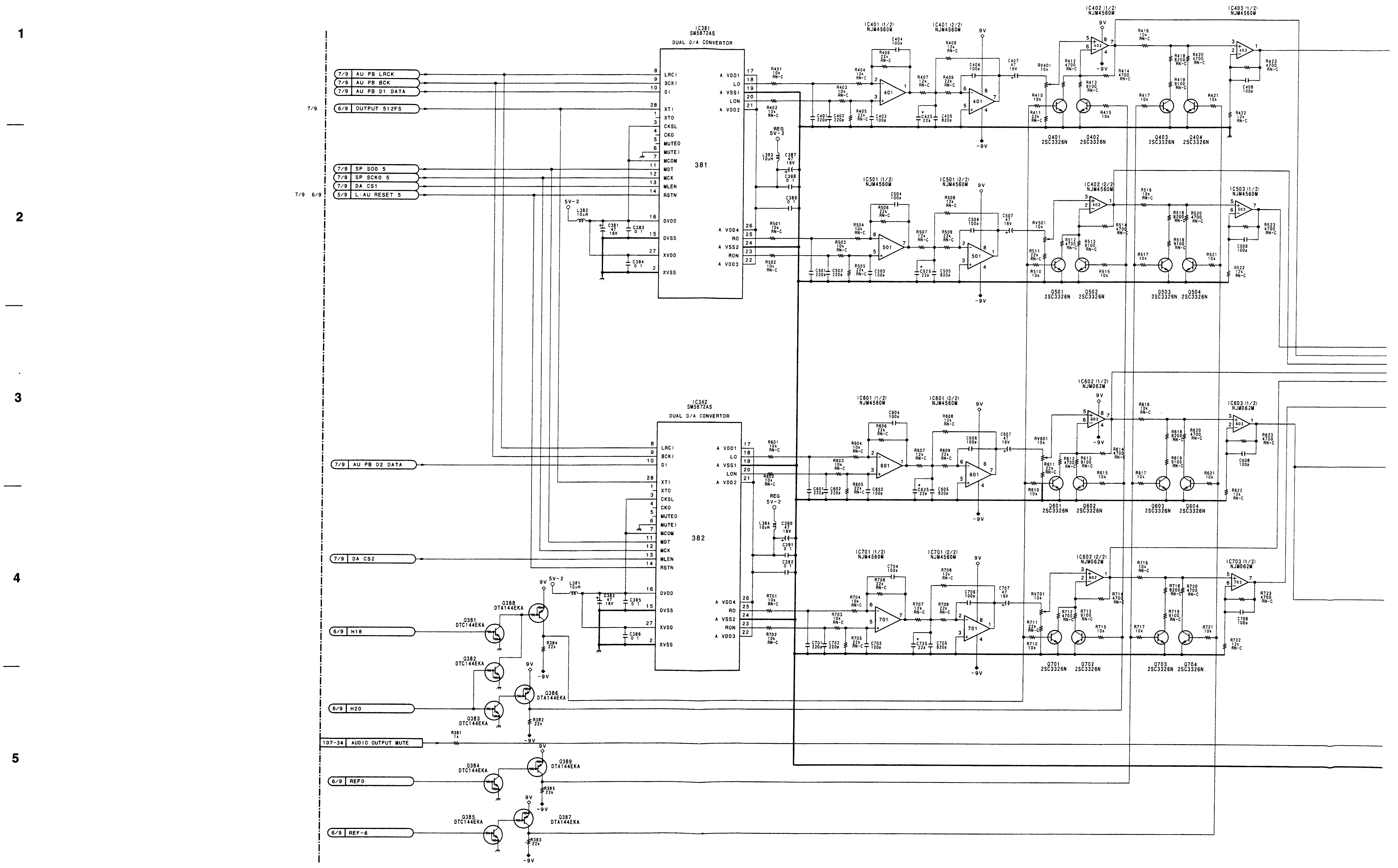

DSR-60/60P

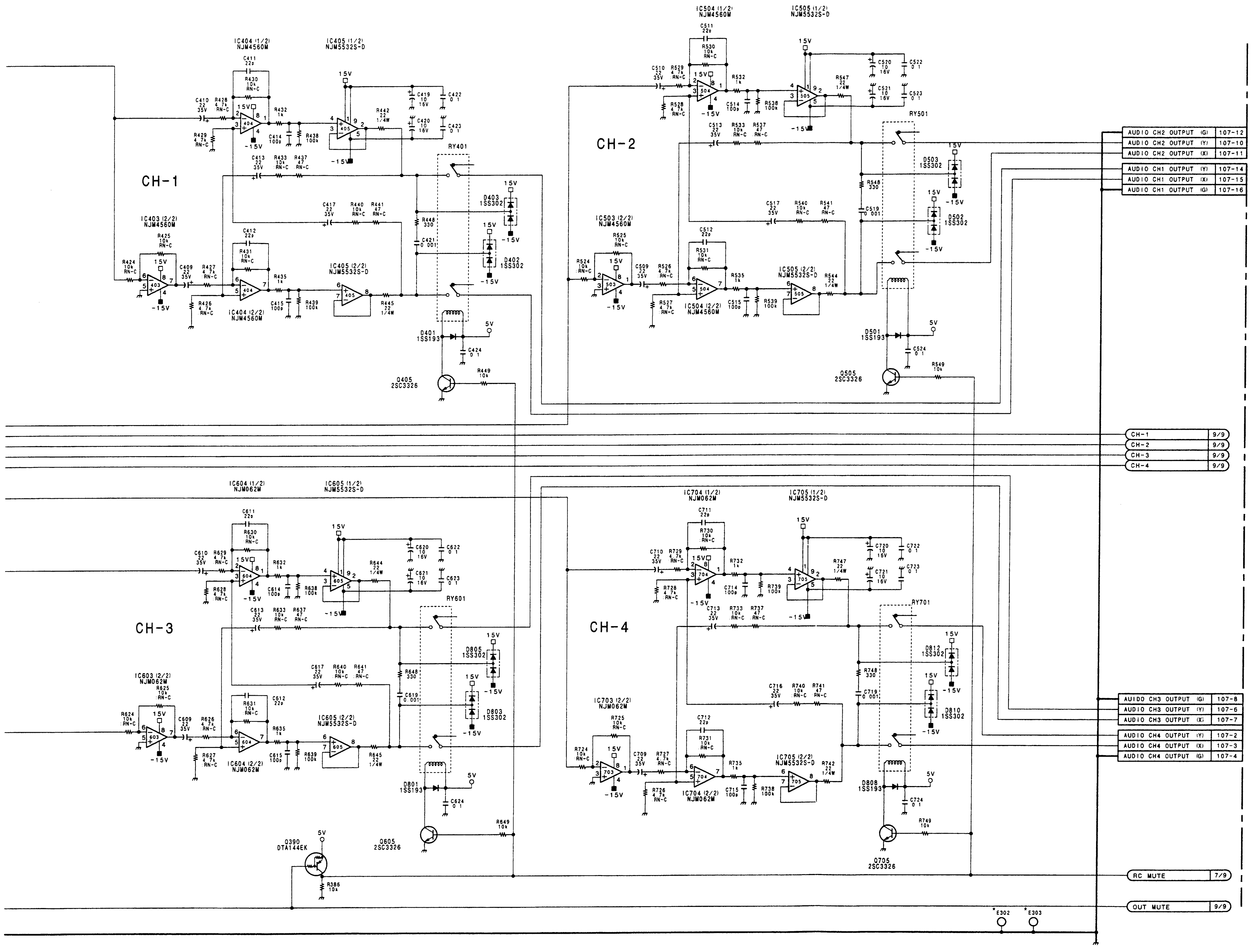

1
2
3
4
5

REF NO	CHANGED INFORMATION	LOT NO.
C425, 525, 625, 725	ADDED	705-
E302, 303		

DV-17/17A (8/9)

BOARD SUFFIX : -12, 13
MODEL DSR-60/60P

DSR-60/60P

DV-17/17A (9/9): VIDEO/AUDIO DIGITAL PROCESS
AUDIO ANALOG PROCESS

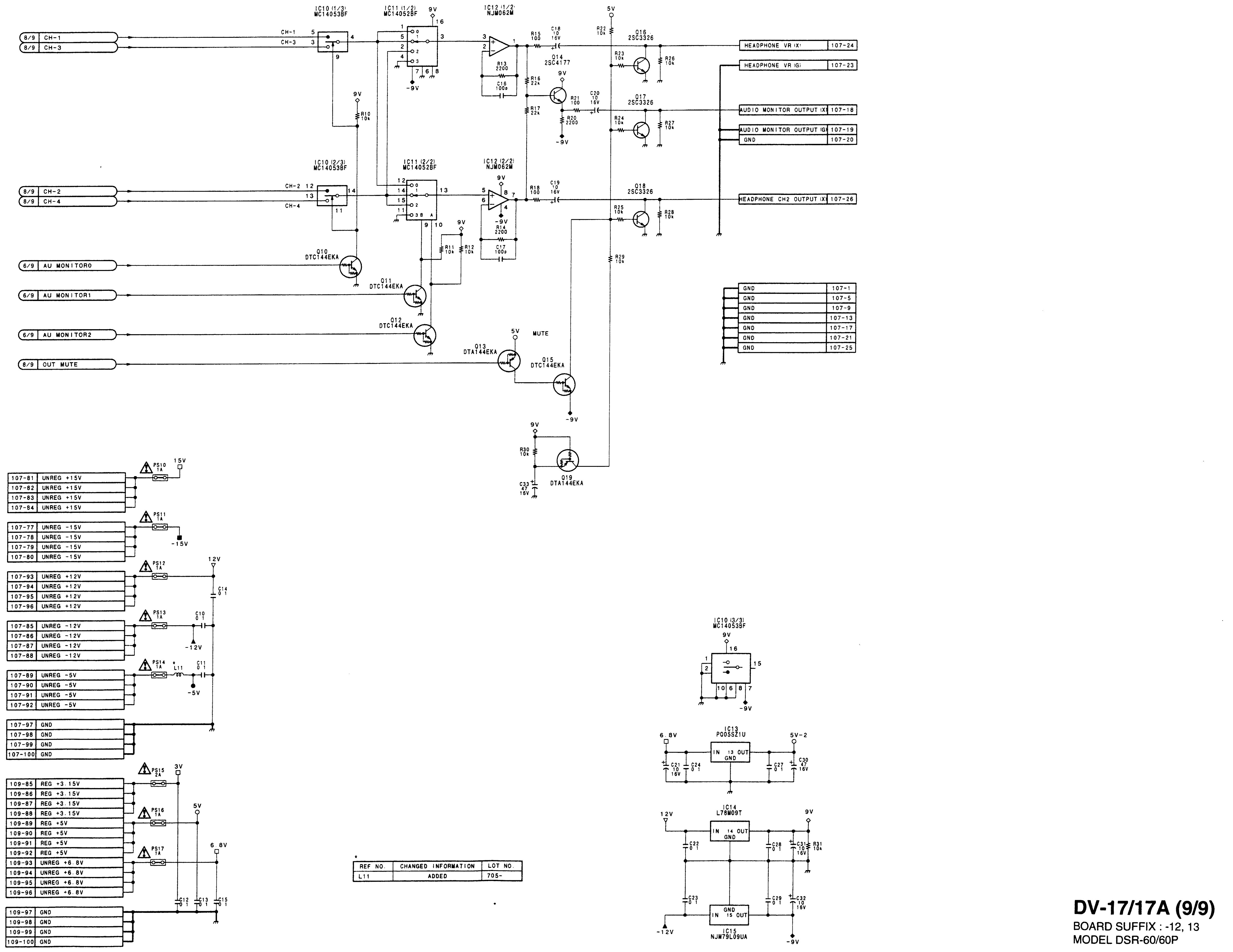

DV-17/17A (9/9)
BOARD SUFFIX : -12, 13
MODEL DSR-60/60P

DV-17/17A (1/9): VIDEO/AUDIO DIGITAL PROCESS AUDIO ANALOG PROCESS

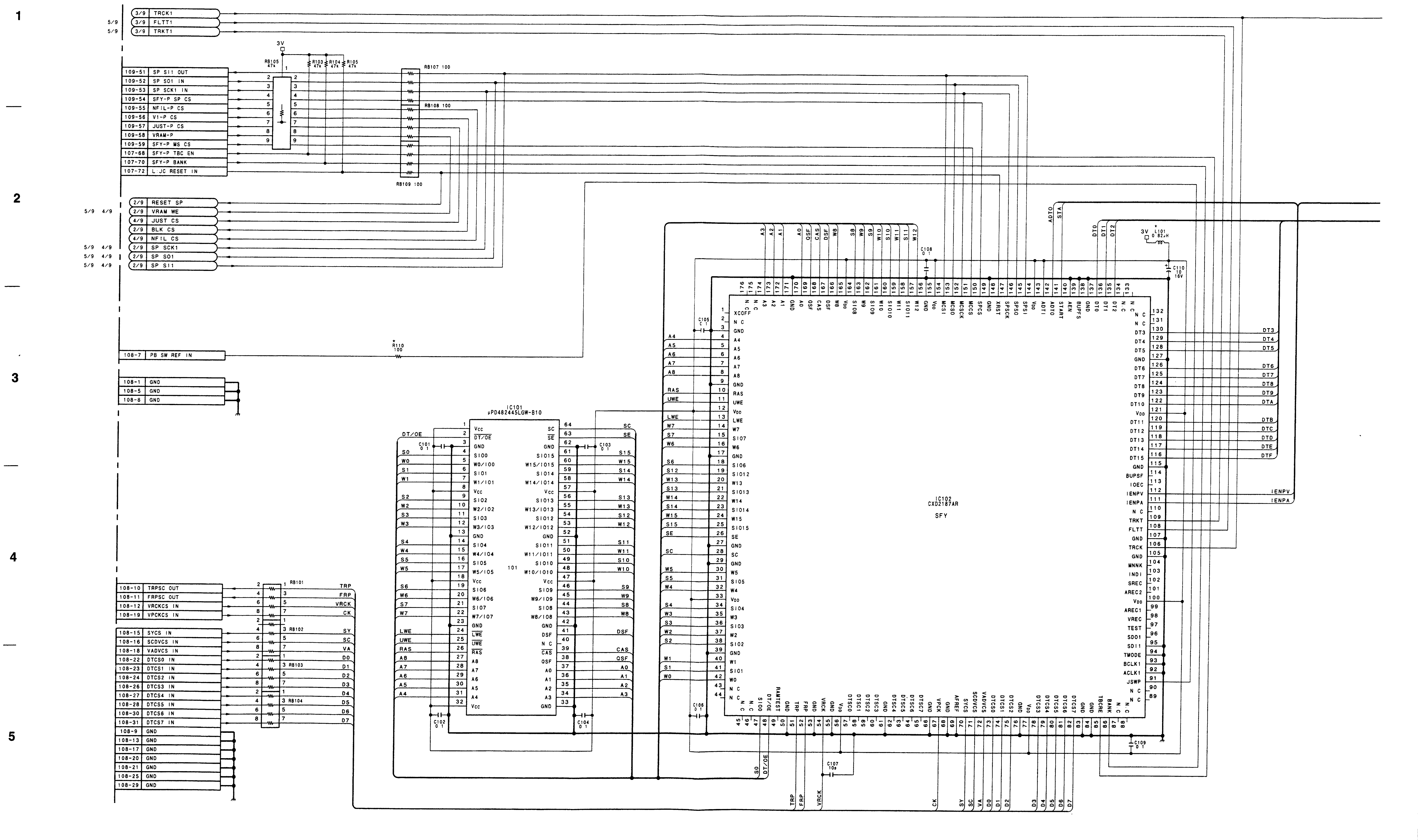

A B C D E F G H

SONY-SP0754 / DRUCK 232

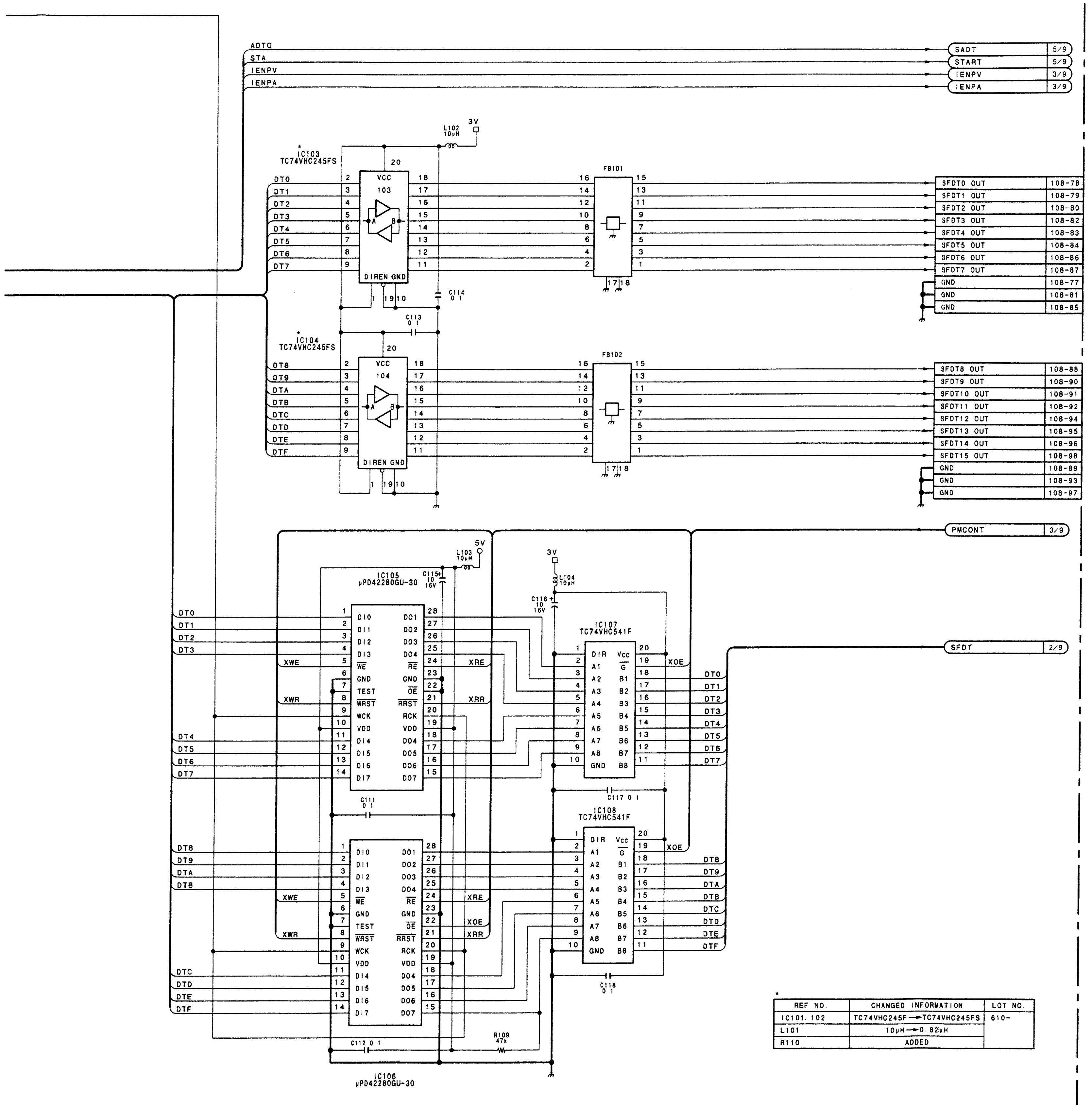

*

REF NO.	CHANGED INFORMATION	LOT NO.
IC101. 102	TC74VHC245F → TC74VHC245FS	610-
L101	10μH → 0.82μH	
R110	ADDED	

DV-17/17A (1/9)
BOARD SUFFIX : -11
MODEL DSR-60/60P

DV-17/17A (2/9): VIDEO/AUDIO DIGITAL PROCESS
AUDIO ANALOG PROCESS

DSR-60/60P

DSR-60/60P

1

2

3

4

5

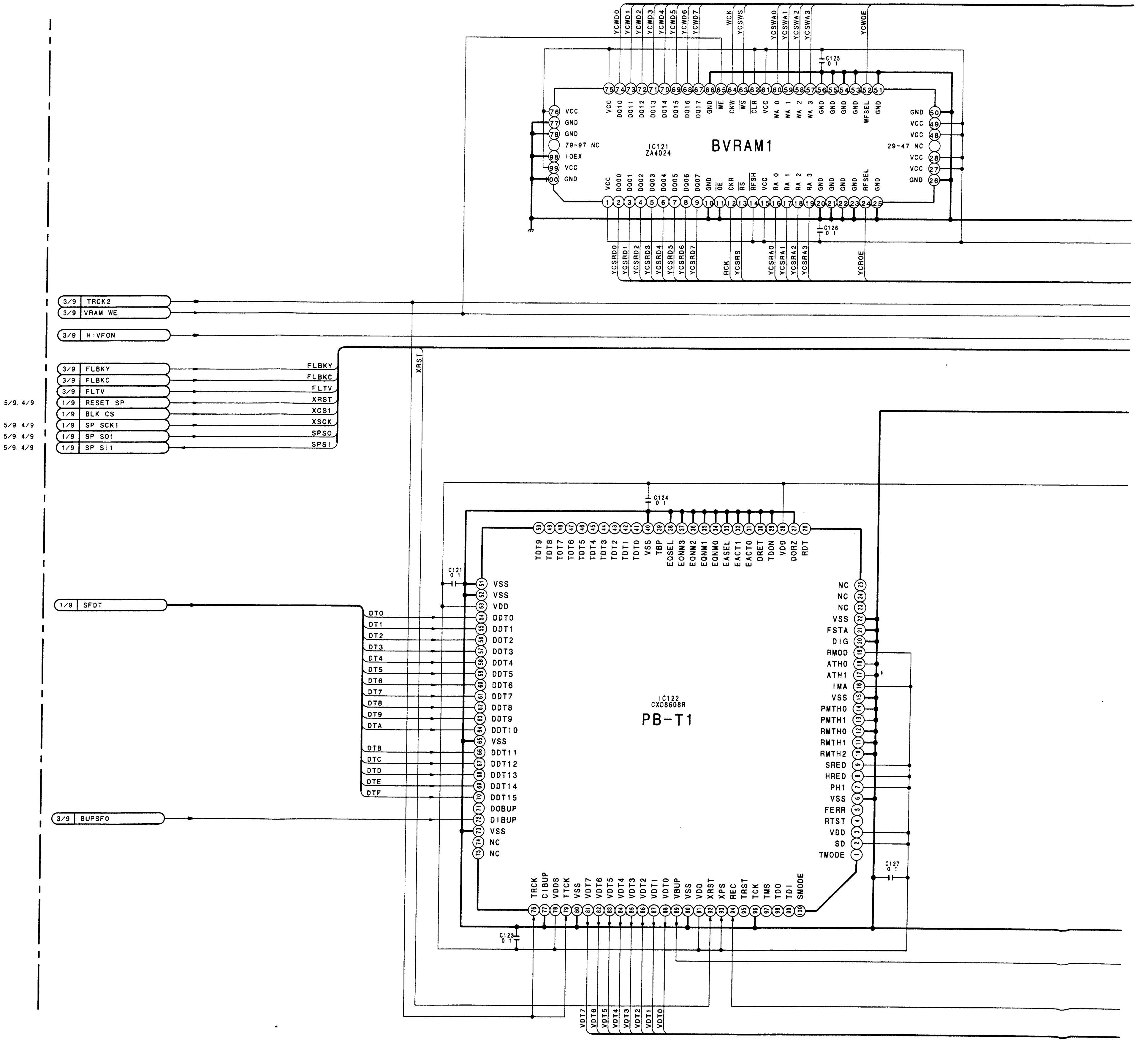

DSR-60/60P

A | B | C | D | E | F | G | H

DSR-60/60P

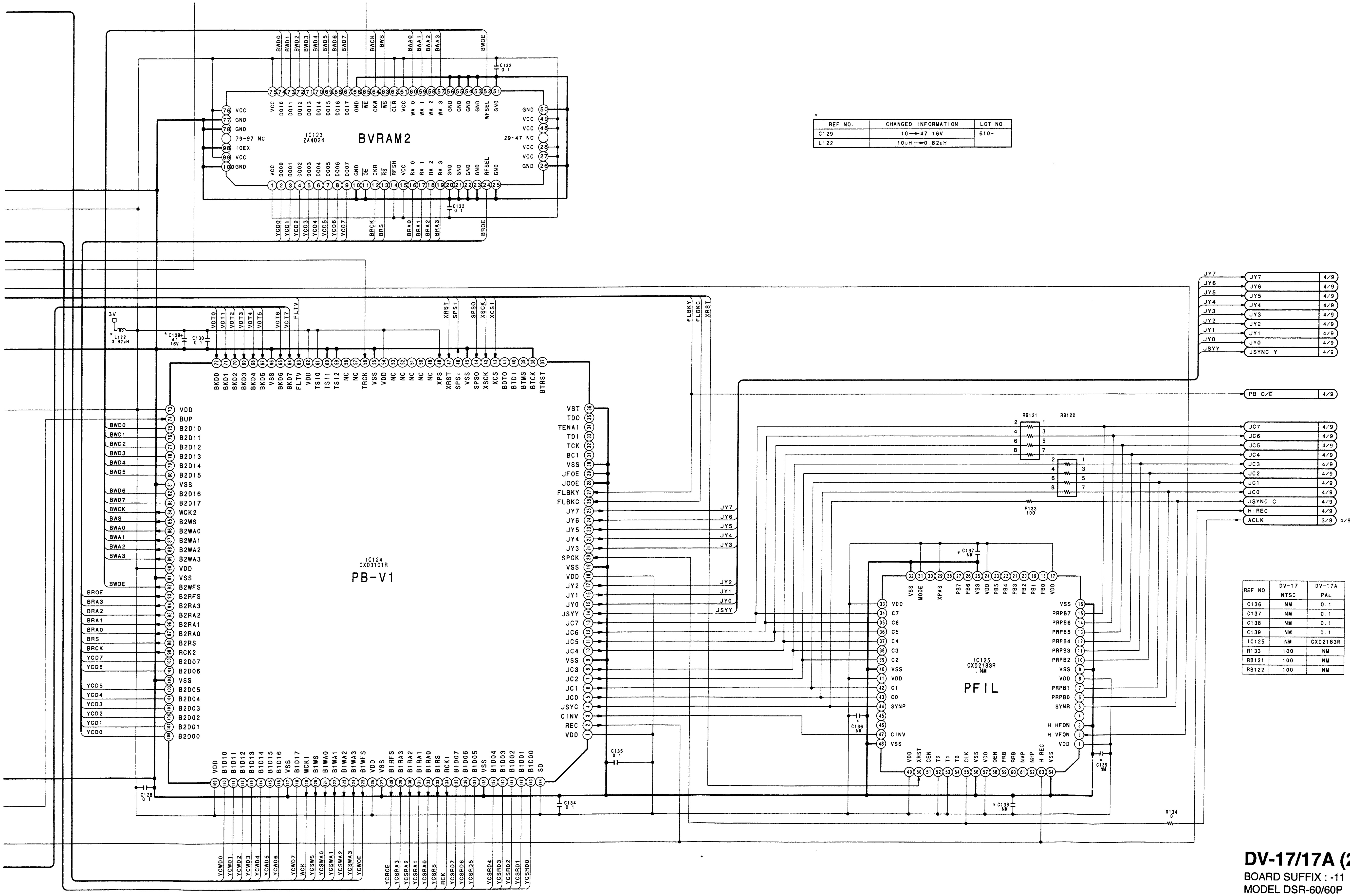

*

REF NO.	CHANGED INFORMATION	LOT NO.
C129	10 → 47 16V	610-
L122	10μH → 0.82μH	

REF NO	DV-17 NTSC	DV-17A PAL
C136	NM	0.1
C137	NM	0.1
C138	NM	0.1
C139	NM	0.1
IC125	NM	CXD2183R
R133	100	NM
RB121	100	NM
RB122	100	NM

DV-17/17A (2/9)

BOARD SUFFIX : -11
MODEL DSR-60/60P

DSR-60/60P

DSR-60/60P

DV-17/17A (3/9): VIDEO/AUDIO DIGITAL PROCESS AUDIO ANALOG PROCESS

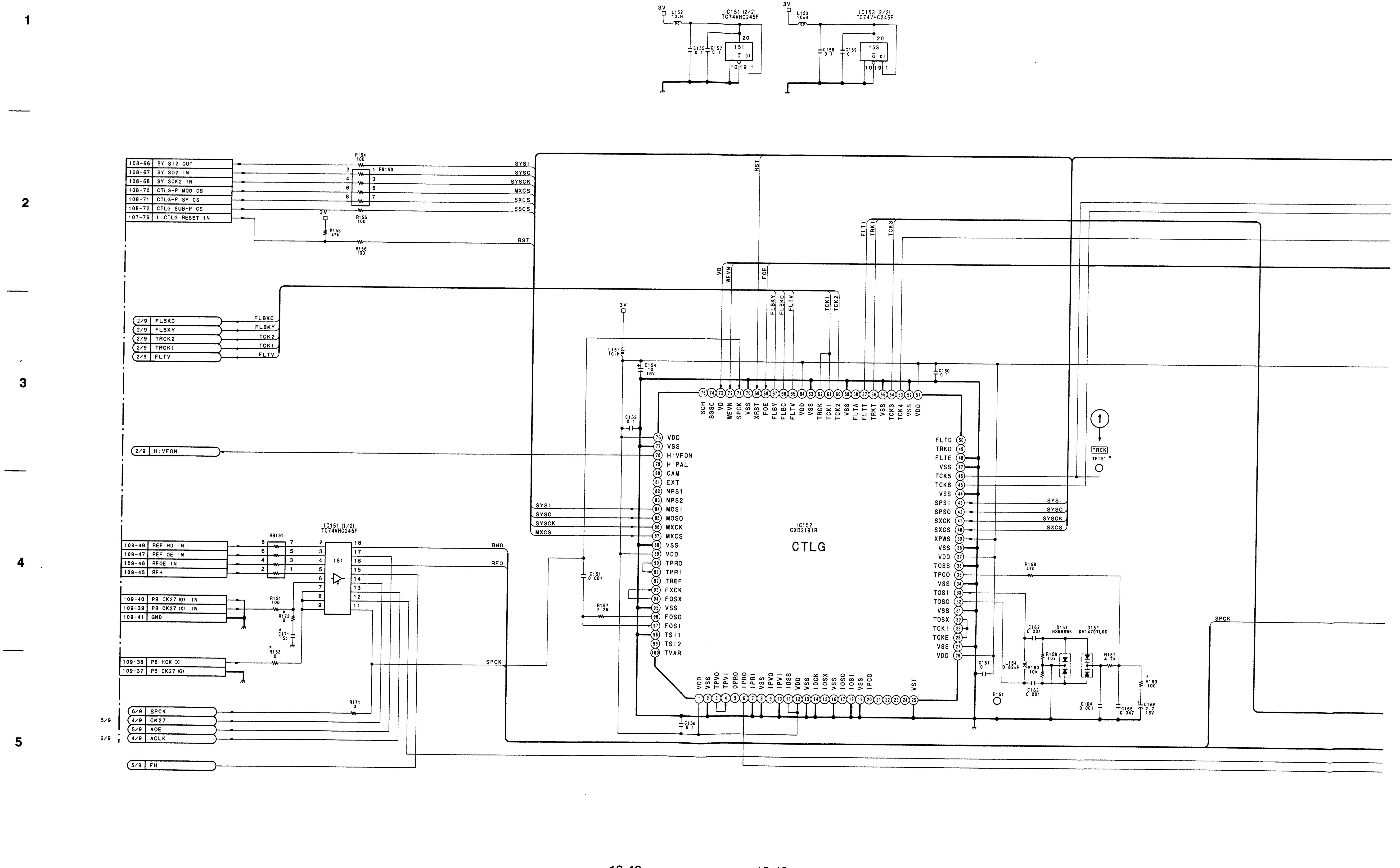

A B C D E F G H

SONY-SP0754 / DRUCK 236

DSR-60/60P

1 TP151 MODE: 75% Color Bar/PB (NTSC)
MODE: 100% Color Bar/PB (PAL)

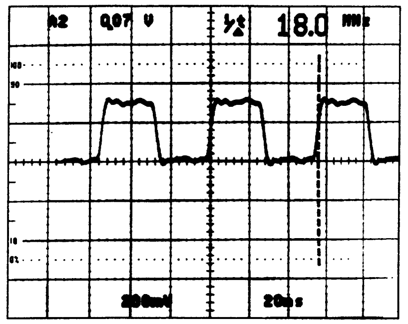

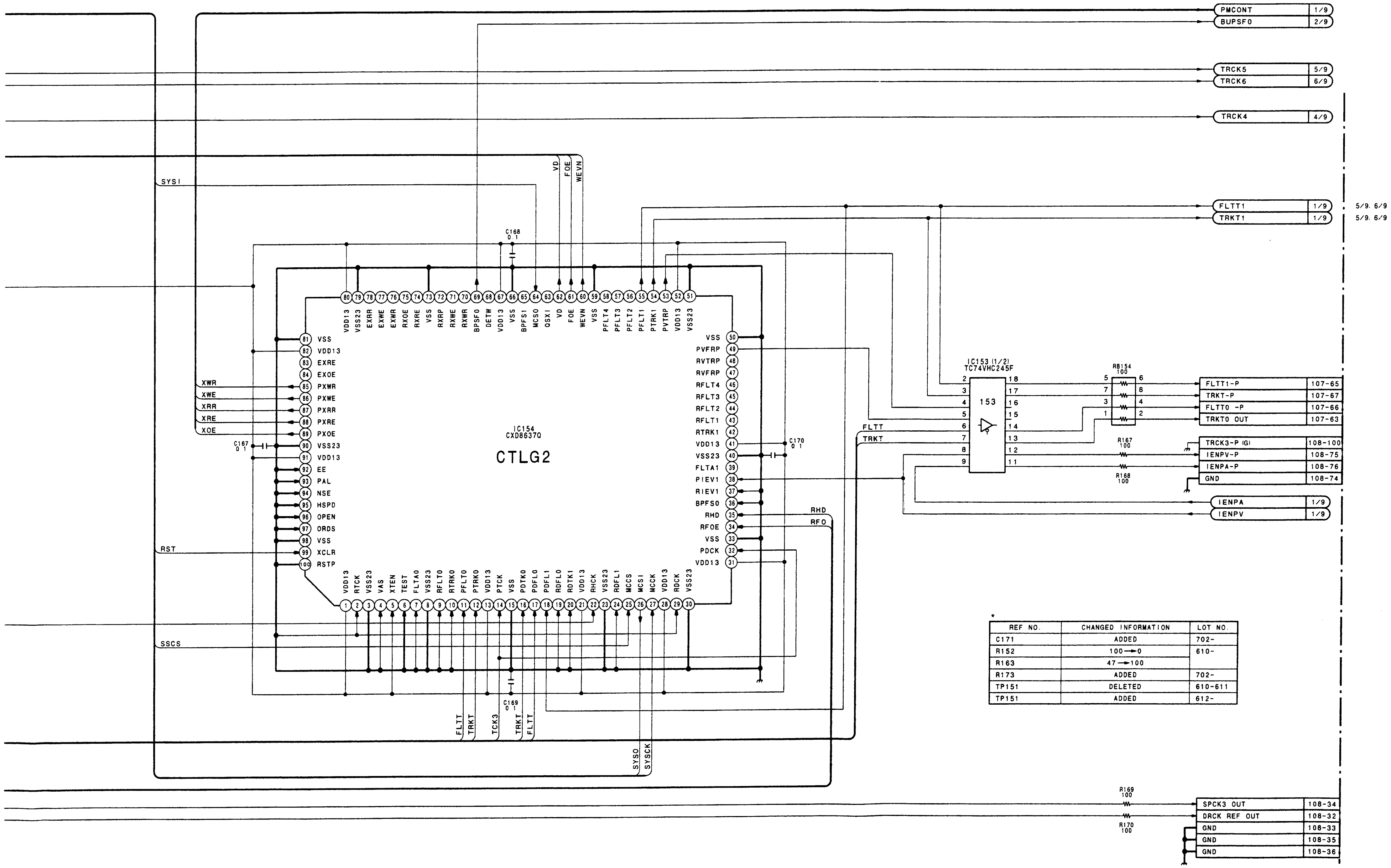

*

REF NO.	CHANGED INFORMATION	LOT NO.
C171	ADDED	702-
R152	100 → 0	610-
R163	47 → 100	
R173	ADDED	702-
TP151	DELETED	610-611
TP151	ADDED	612-

1
2
3
4
5

DV-17/17A (3/9)
BOARD SUFFIX : -11
MODEL DSR-60/60P

DV-17/17A (4/9): VIDEO/AUDIO DIGITAL PROCESS AUDIO ANALOG PROCESS

DSR-60/60P

DSR-60/60P

1
2
3
4
5

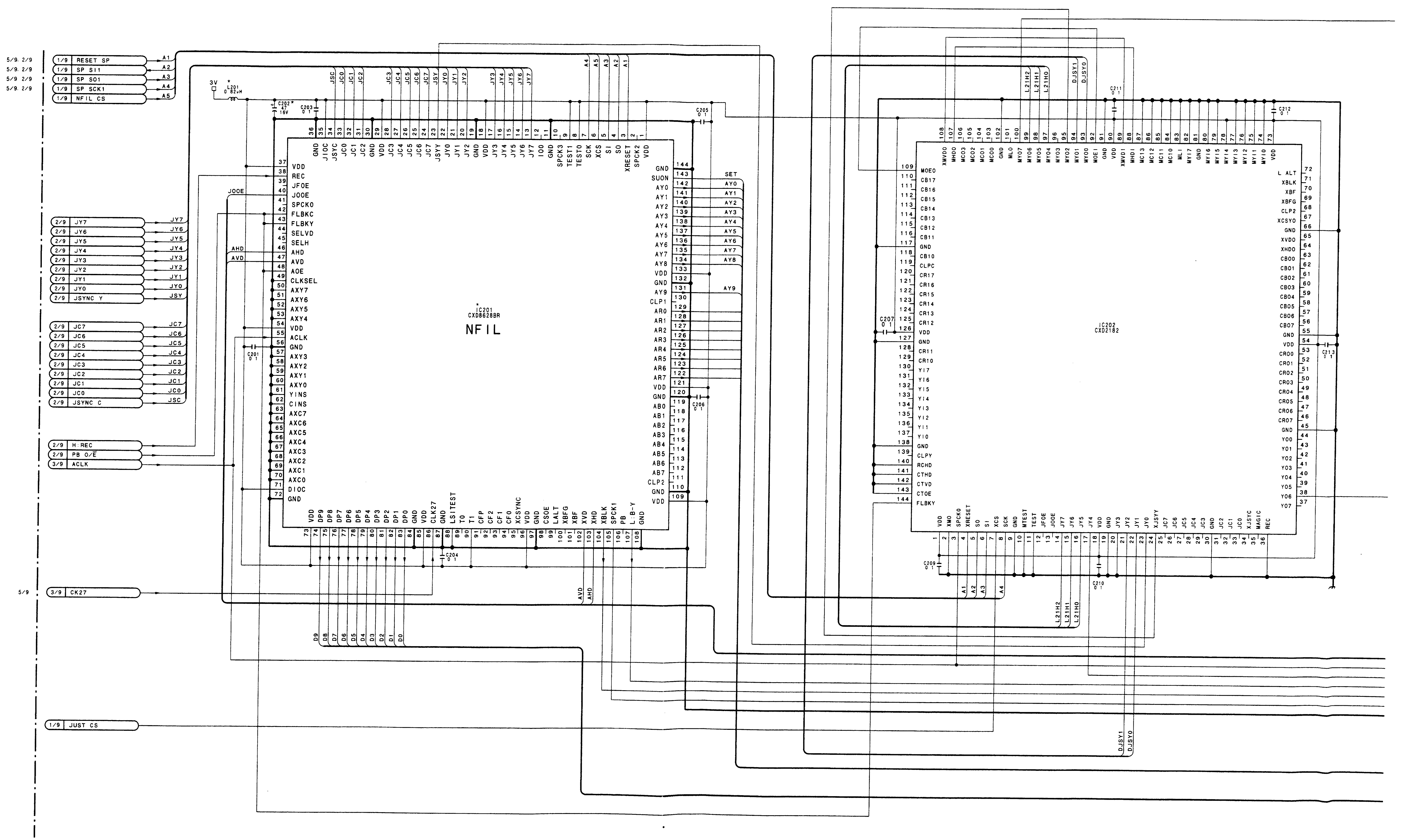

A B C D E F G H

SONY-SP0754 / DRUCK 238

DSR-60/60P

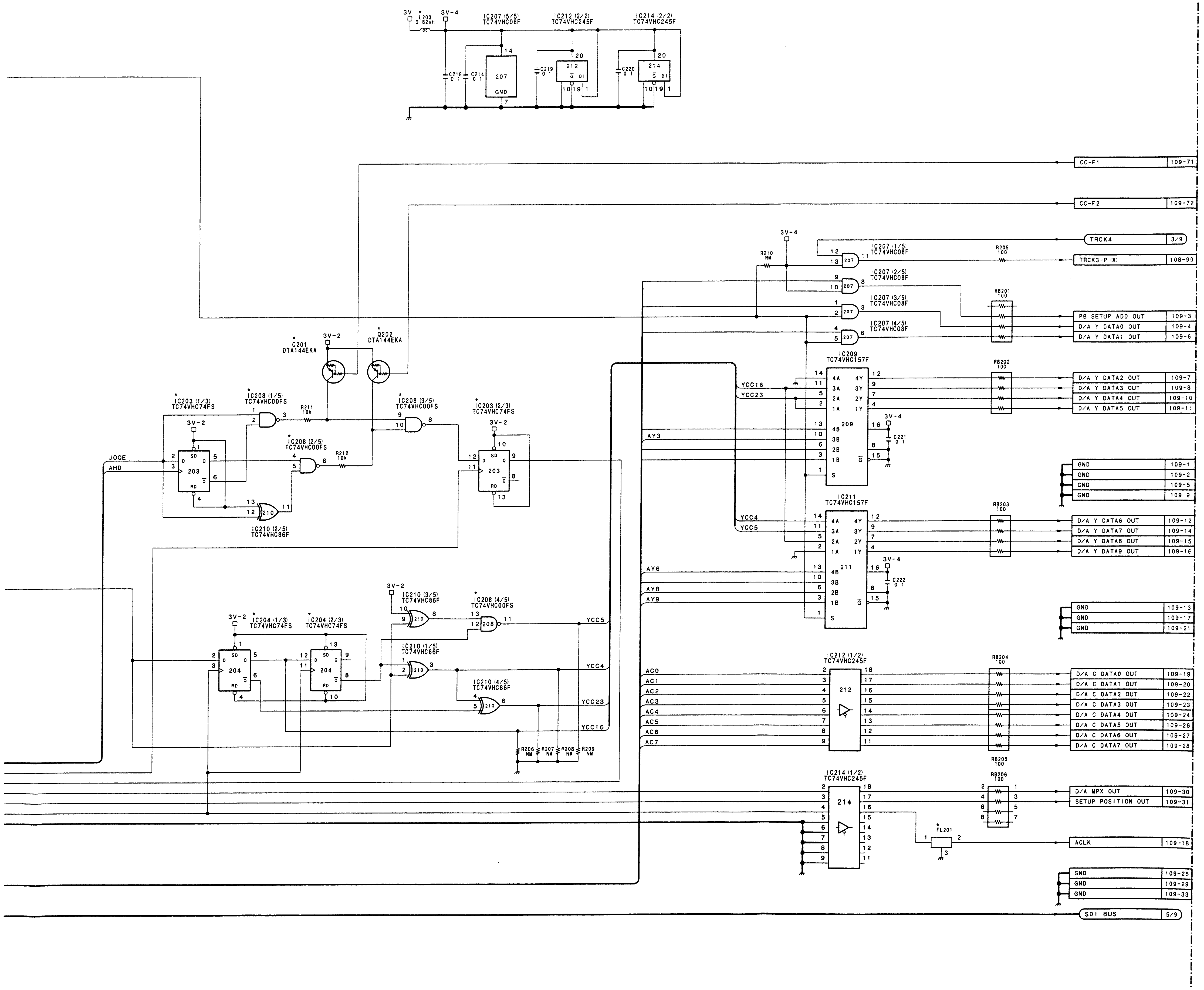

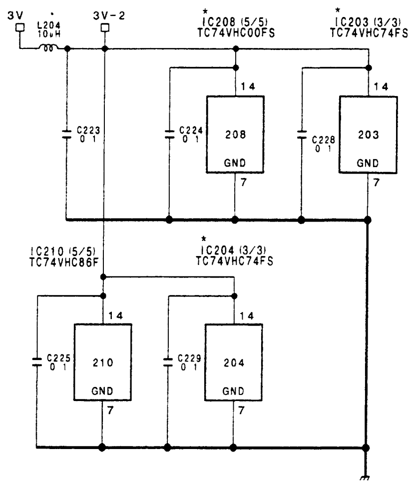

REF NO	DV-17 NTSC	DV-17A PAL
IC202	CXD2182	NM
IC203	TC74VHC74FS	NM
IC204	TC74VHC74FS	NM
IC208	TC74VHC00FS	NM
IC210	TC74VHC86F	NM
Q201	DTA144EKA	NM
Q202	DTA144EKA	NM
R206	NM	0
R207	NM	0
R208	NM	0
R209	NM	0
R210	NM	0
R211	10K	NM
R212	10K	NM
C207	0.1	NM
C209	0.1	NM
C210	0.1	NM
C211	0.1	NM
C212	0.1	NM
C213	0.1	NM

*

REF NO.	CHANGED INFORMATION	LOT NO.
C202	ADDED	610-
FL201	ADDED	
IC201	CXD8628R → CXD8628BR	
IC203. 204	TC74VHC74F → TC74VHC74FS	610-801
IC208	TC74VHC02F → TC74VHC00FS	
L201. 203	10μH → 0.82μH	610-
Q201. 202	ADDED	

DV-17/17A (4/9)

BOARD SUFFIX : -11
MODEL DSR-60/60P

DSR-60/60P

DV-17/17A (5/9): VIDEO/AUDIO DIGITAL PROCESS
AUDIO ANALOG PROCESS

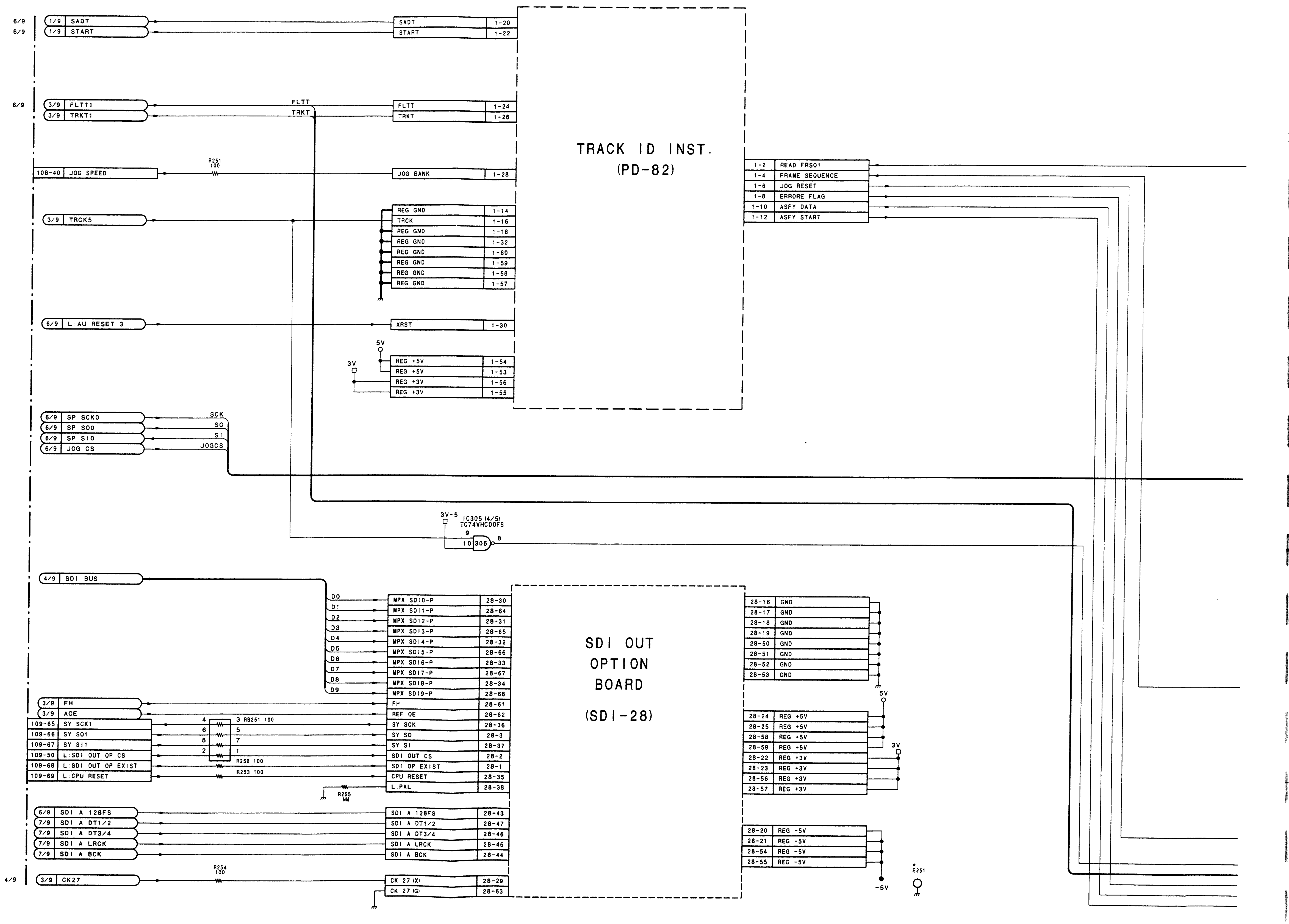

A B C D E F G H

SONY-SP0754 / DRUCK 240

DSR-60/60P

1
—
2
—
3
—
4
—
5

① TP151 MODE: 75% Color Bar/PB (NTSC)
MODE: 100% Color Bar/PB (PAL)

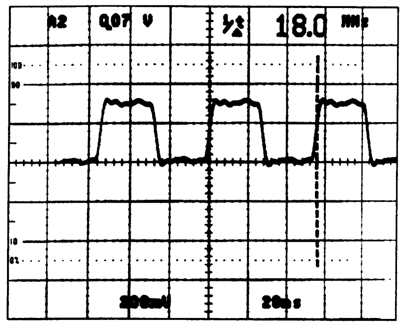

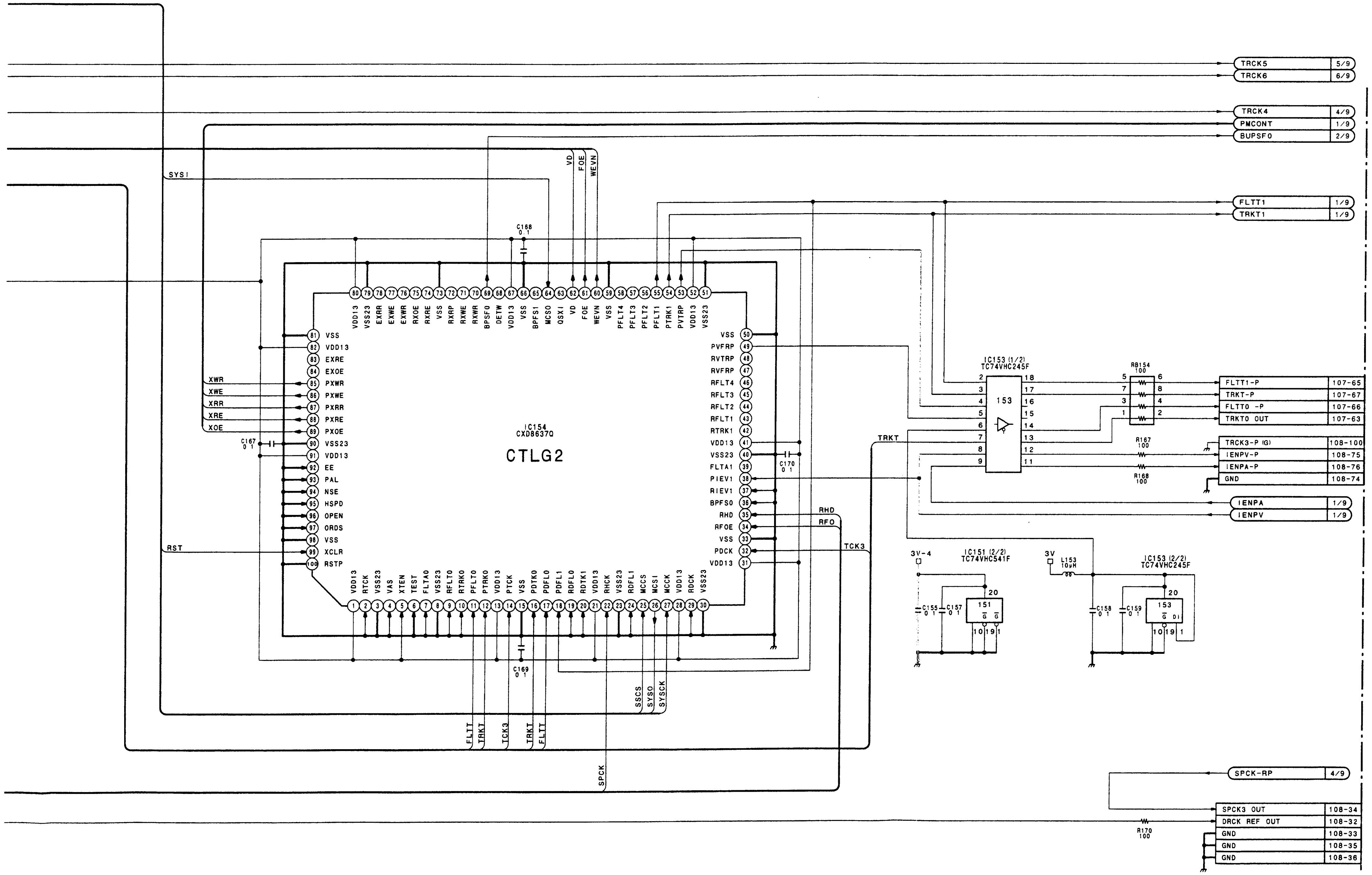

DV-17/17A (3/9)

BOARD SUFFIX : -14
MODEL DSR-60/60P

DV-17/17A (4/9): VIDEO/AUDIO DIGITAL PROCESS
AUDIO ANALOG PROCESS

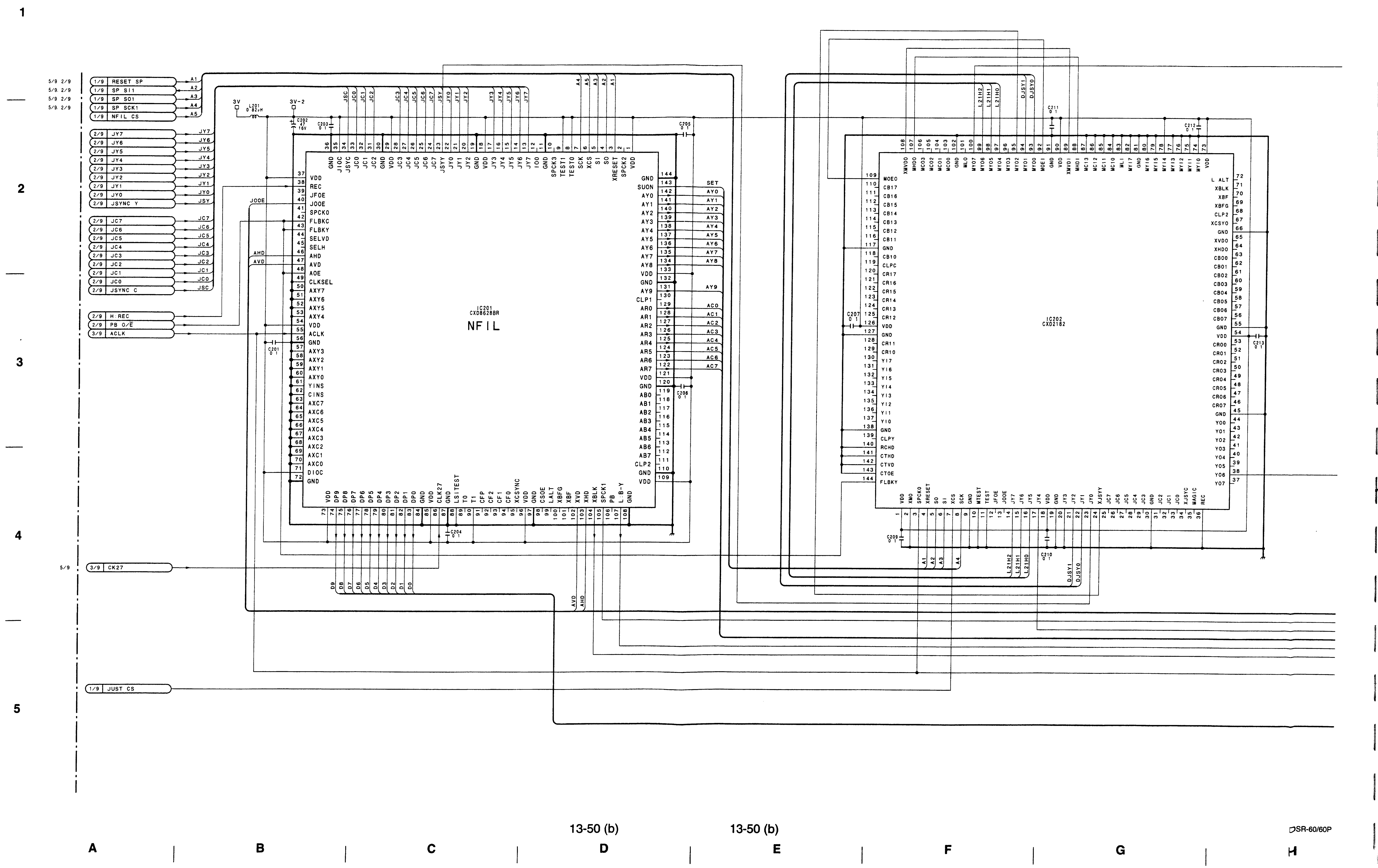

DSR-60/60P

DSR-60/60P

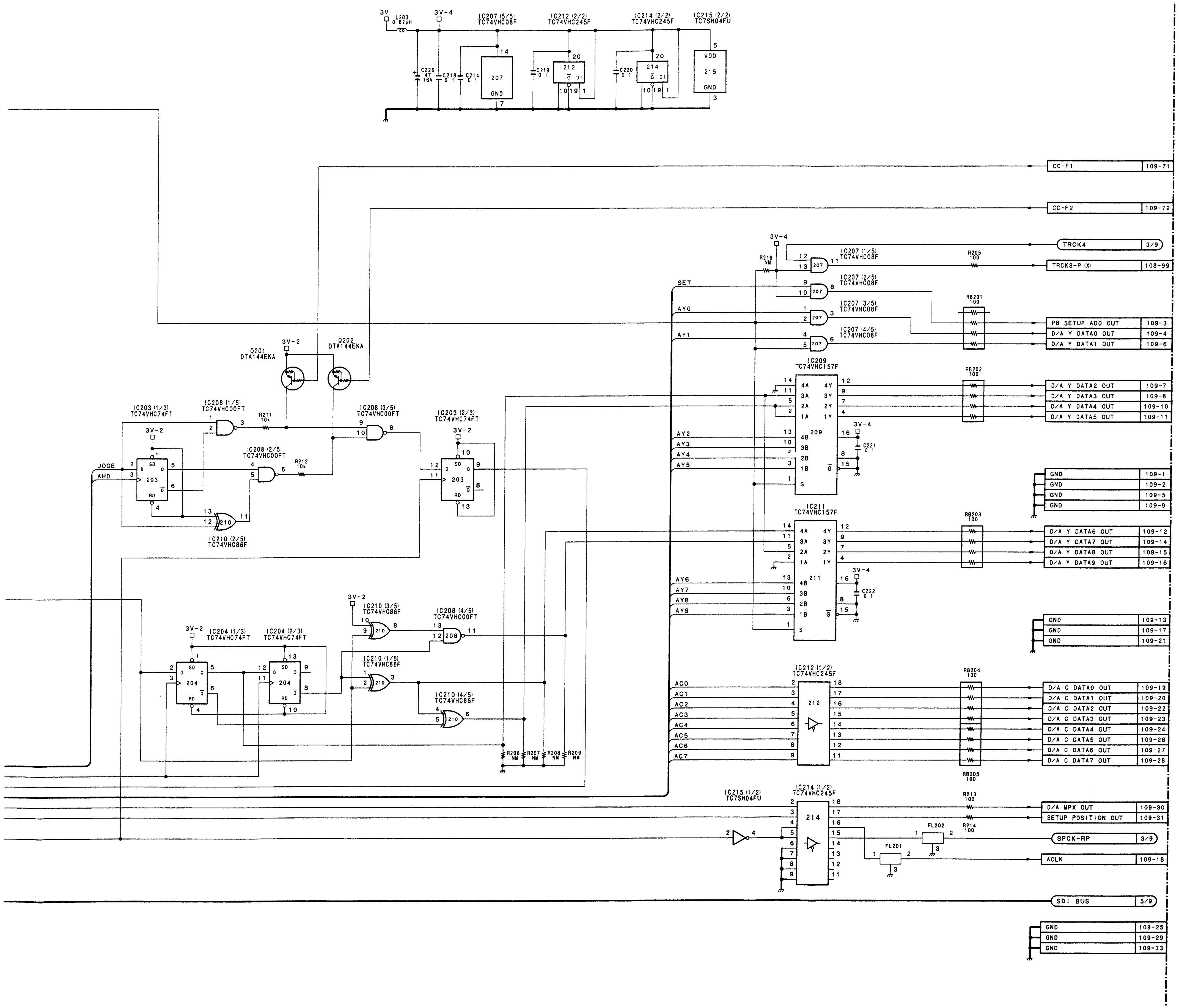

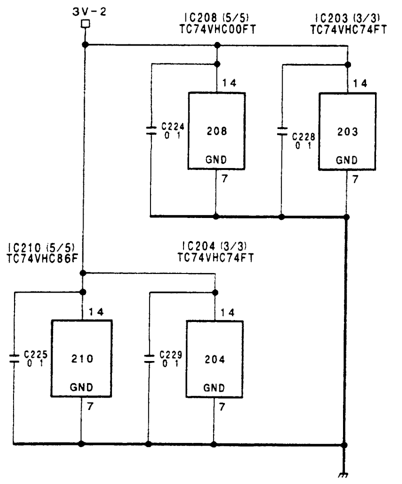

REF NO	DV-17 NTSC	DV-17A PAL
IC202	CXD2182	NM
IC203	TC74VHC74FS	NM
IC204	TC74VHC74FS	NM
IC208	TC74VHC00FS	NM
IC210	TC74VHC86F	NM
Q201	DTA144EKA	NM
Q202	DTA144EKA	NM
R206	NM	0
R207	NM	0
R208	NM	0
R209	NM	0
R210	NM	0
R211	10K	NM
R212	10K	NM
C207	0.1	NM
C209	0.1	NM
C210	0.1	NM
C211	0.1	NM
C212	0.1	NM
C213	0.1	NM
C224	0.1	NM
C225	0.1	NM
C228	0.1	NM
C229	0.1	NM

1 2 3 4 5

DV-17/17A (4/9)

BOARD SUFFIX : -14
MODEL DSR-60/60P

DV-17/17A (5/9): VIDEO/AUDIO DIGITAL PROCESS
AUDIO ANALOG PROCESS

DSR-60/60P

1

2

3

4

5

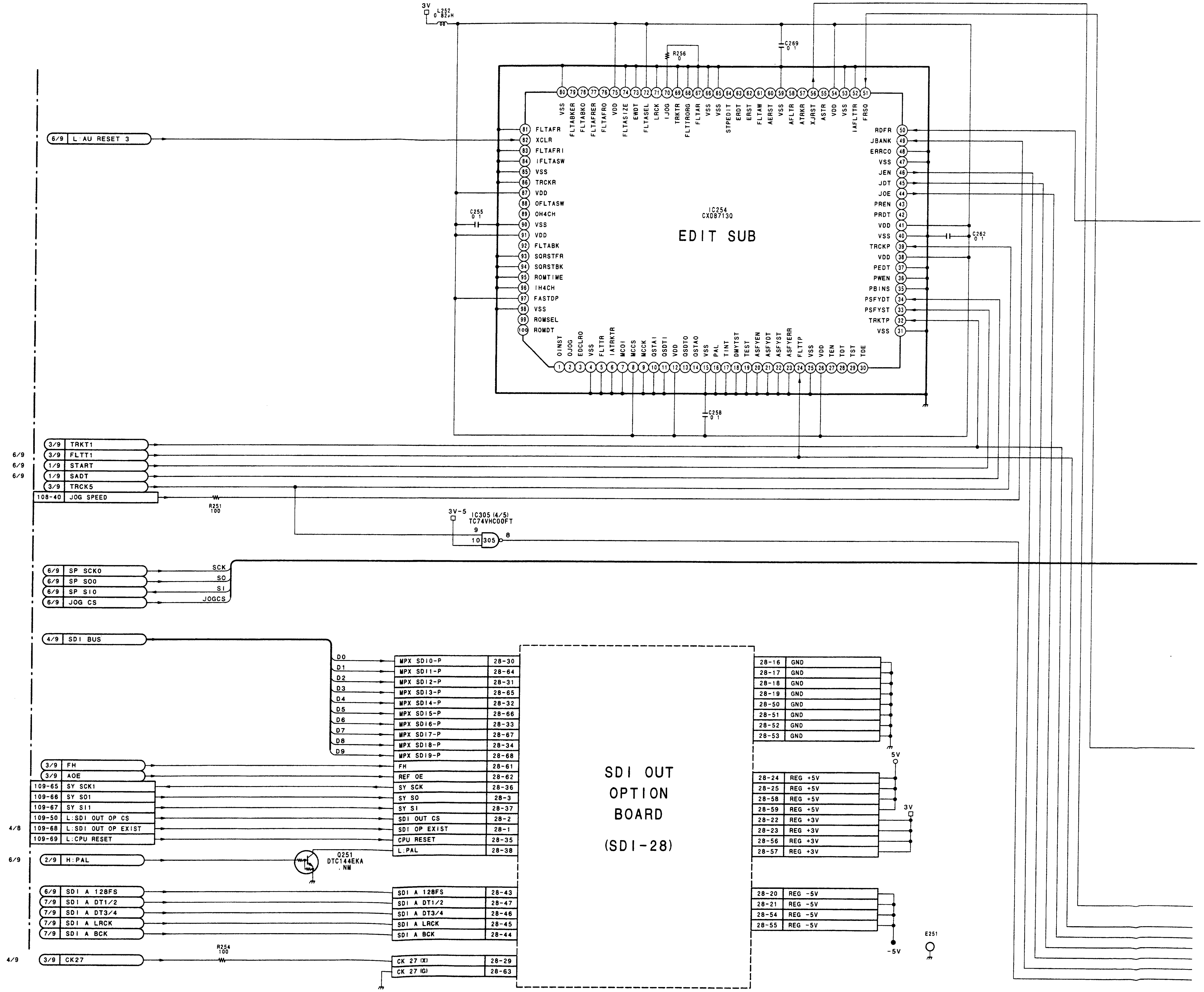

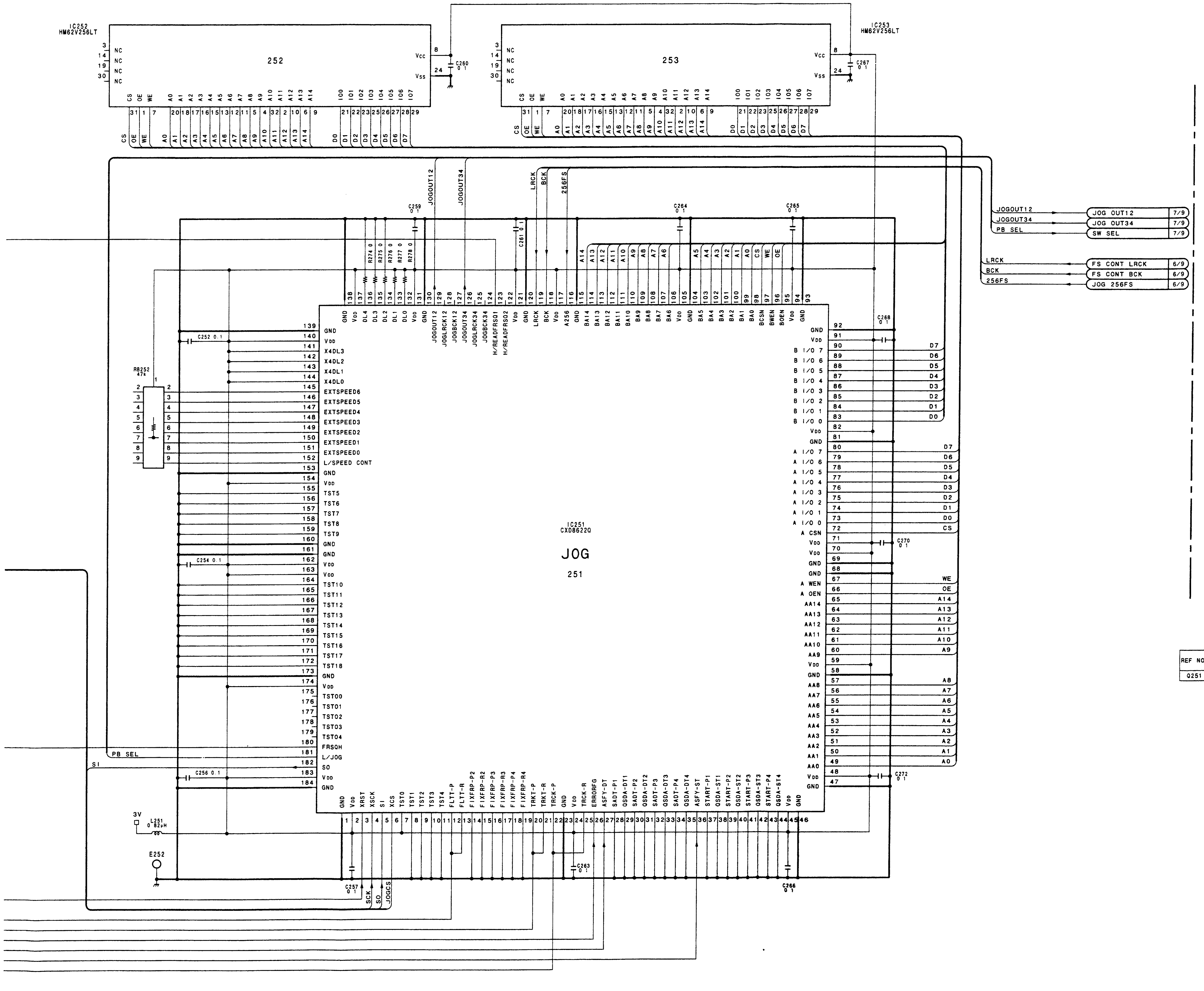

REF NO	DV-17 NTSC	DV-17A PAL
Q251	NM	DTC144EKA

1

2

3

4

5

DV-17/17A (5/9)

BOARD SUFFIX : -14

MODEL DSR-60/60P

 DV-17/17A (6/9)

 DSR-60/60P

DV-17/17A (6/9): VIDEO/AUDIO DIGITAL PROCESS AUDIO ANALOG PROCESS

1

① TP301 MODE: 75% Color Bar/PB (NTSC)
MODE: 100% Color Bar/PB (PAL)

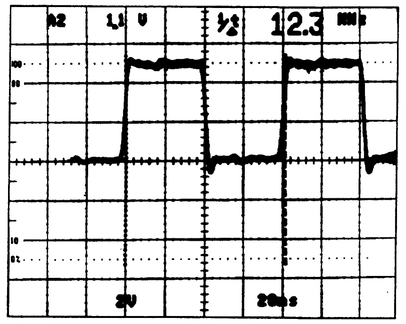

2

(fc = 48 KHz)

② TP302 MODE: 75% Color Bar/PB (NTSC)
MODE: 100% Color Bar/PB (PAL)

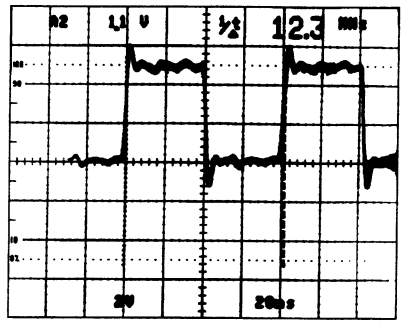

3

4

5

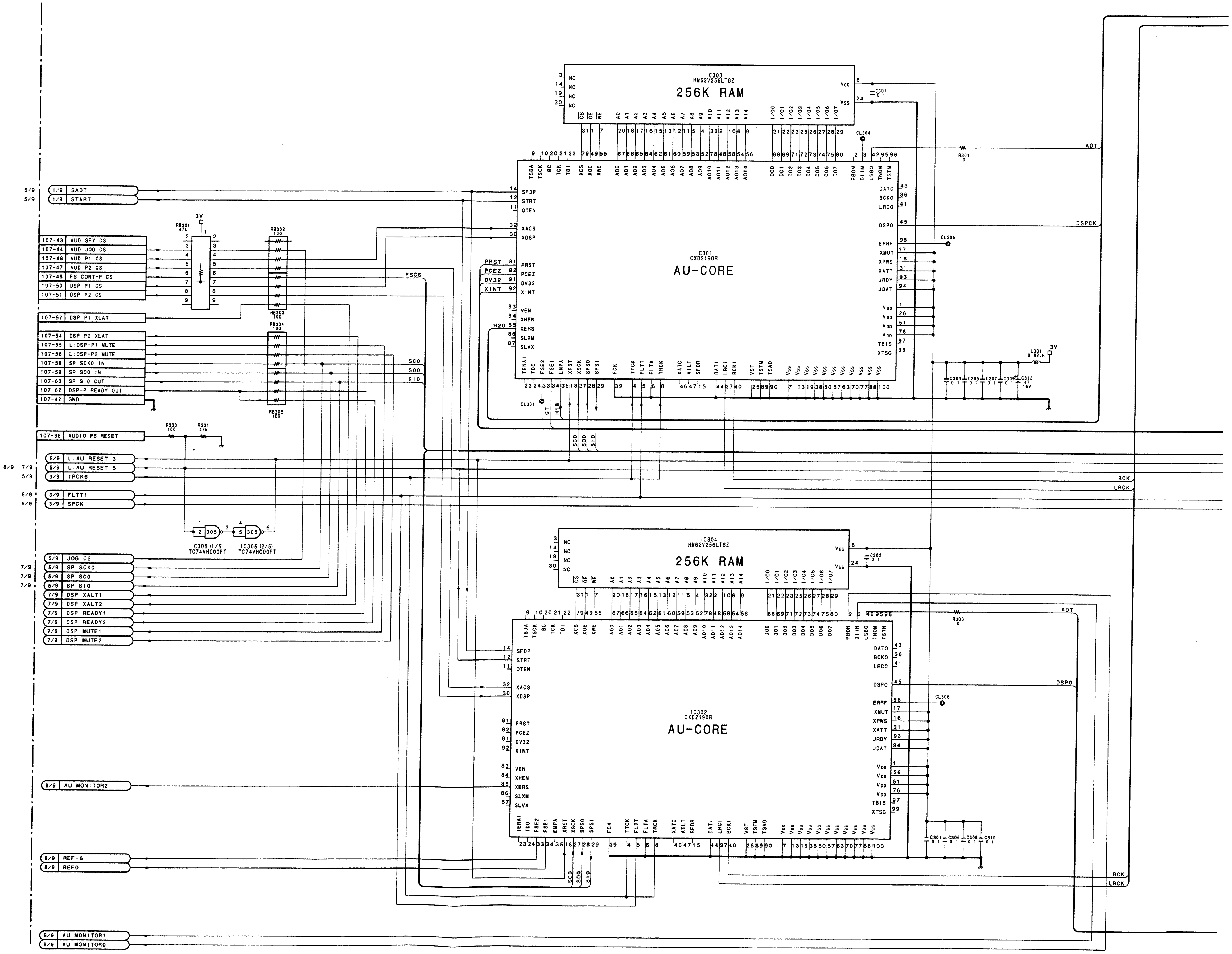

 13-54 (b)

DSR-60/60P

A | B | C | D | E | F | G | H

SONY-SP0754 / DRUCK 246

DSR-60/60P

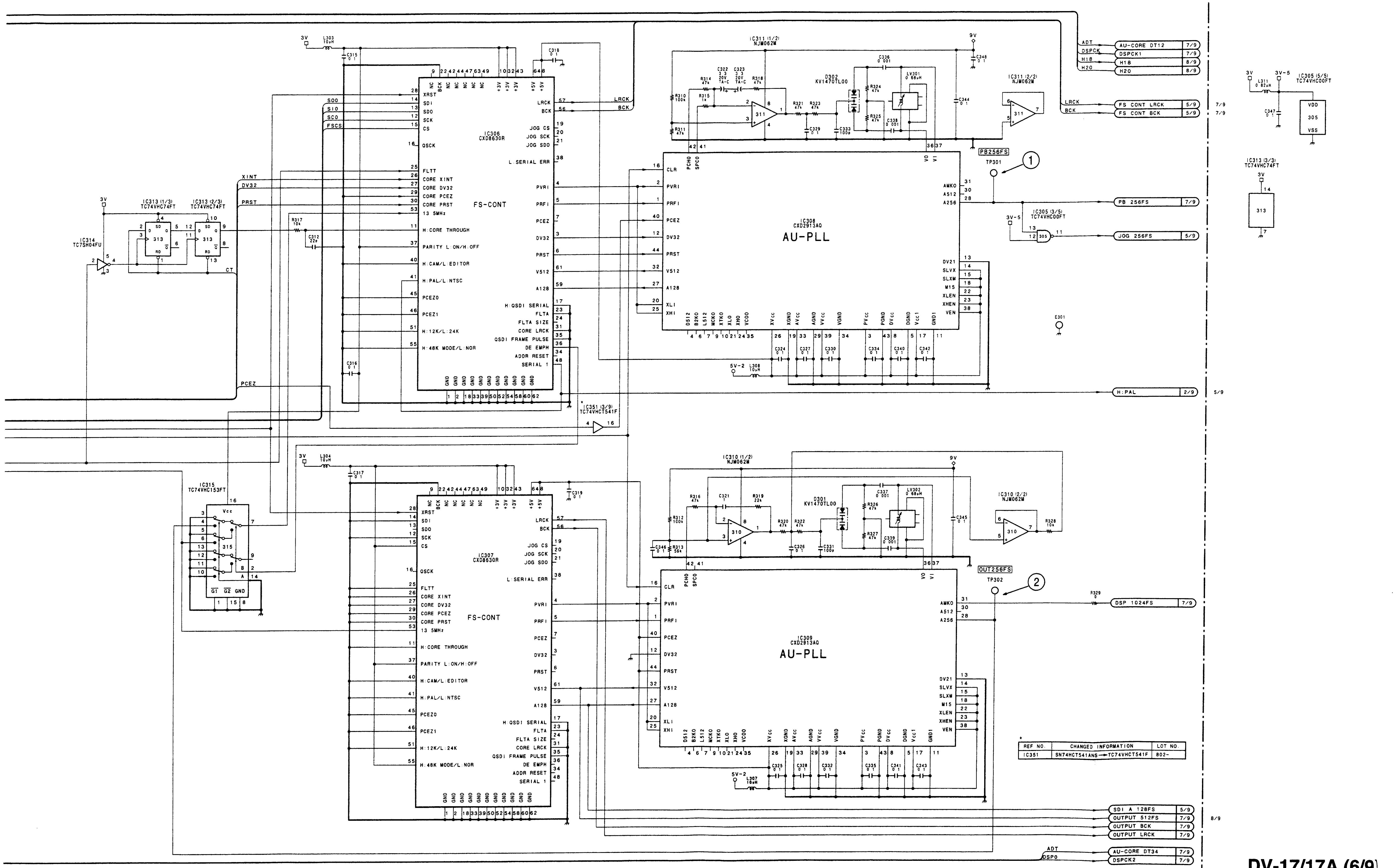

REF NO.	CHANGED INFORMATION	LOT NO.
IC351	SN74HCT541ANS → TC74VHCT541F	802-

DV-17/17A (6/9)

BOARD SUFFIX : -14

MODEL DSR-60/60P

DV-17/17A (7/9): VIDEO/AUDIO DIGITAL PROCESS
AUDIO ANALOG PROCESS

1

① TP351 MODE: 75% Color Bar/PB (NTSC)
MODE: 100% Color Bar/PB (PAL)

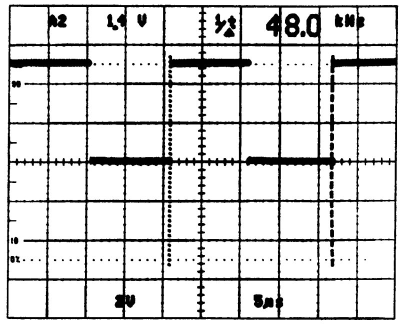

(fc = 48 KHz)

2

② TP352 MODE: 75% Color Bar/PB (NTSC)
MODE: 100% Color Bar/PB (PAL)

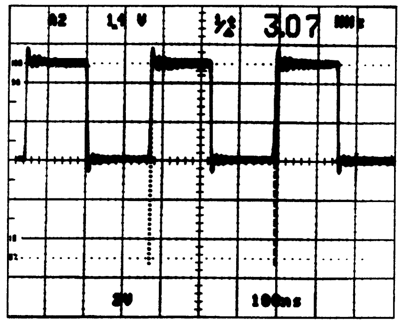

(fc = 48 KHz)

3

③ TP353 MODE: 75% Color Bar/PB (NTSC)
MODE: 100% Color Bar/PB (PAL)

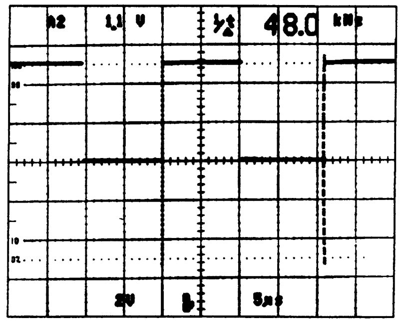

4

④ TP354 MODE: 75% Color Bar/PB (NTSC)
MODE: 100% Color Bar/PB (PAL)

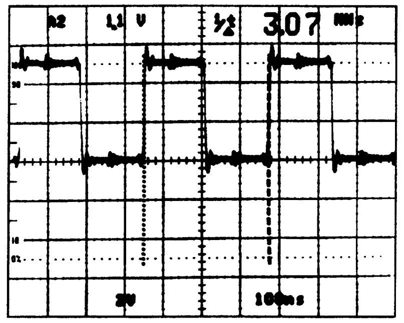

5

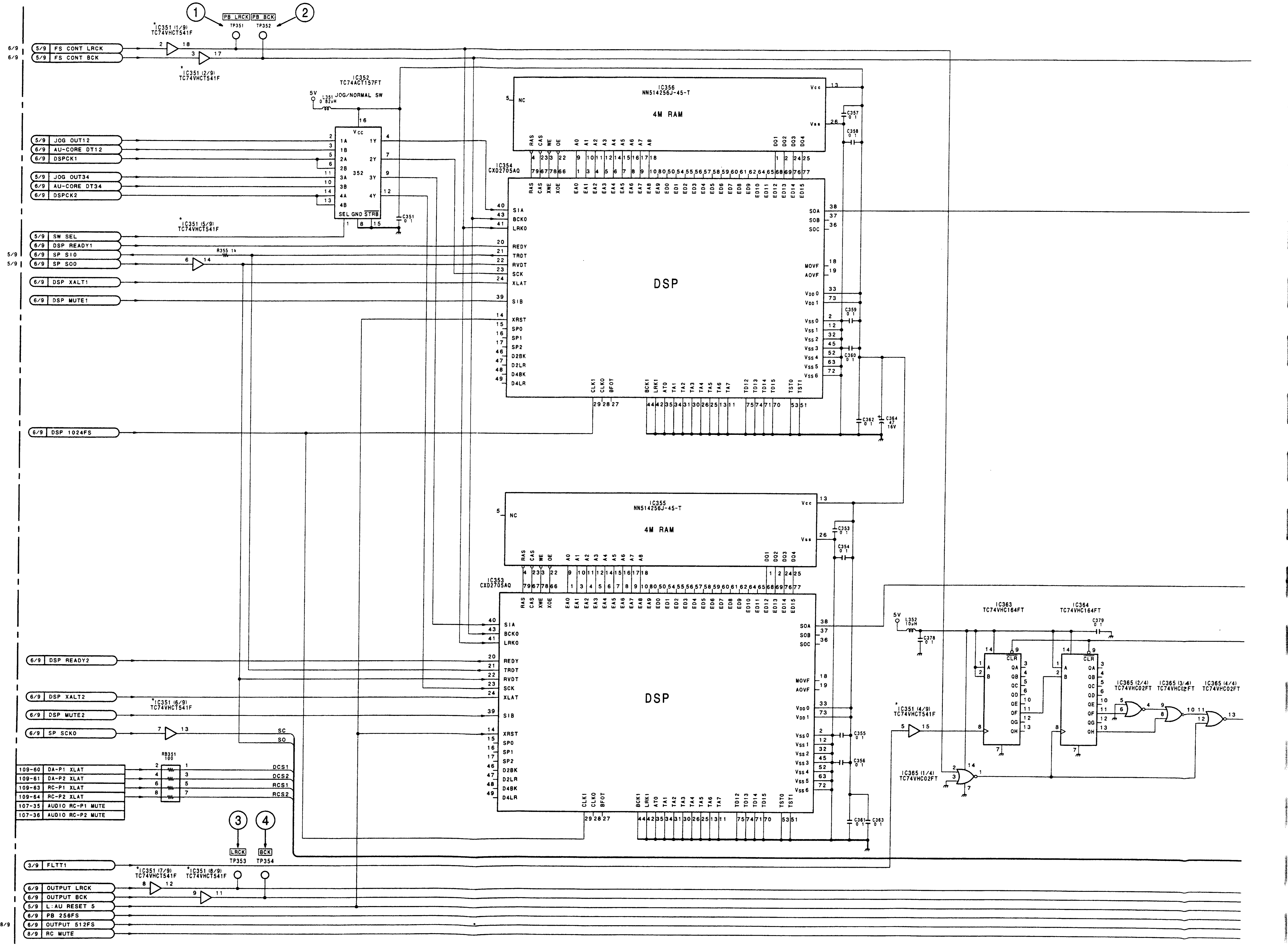

A | B | C | D | E | F | G | H

SONY-SP0754 / DRUCK 248

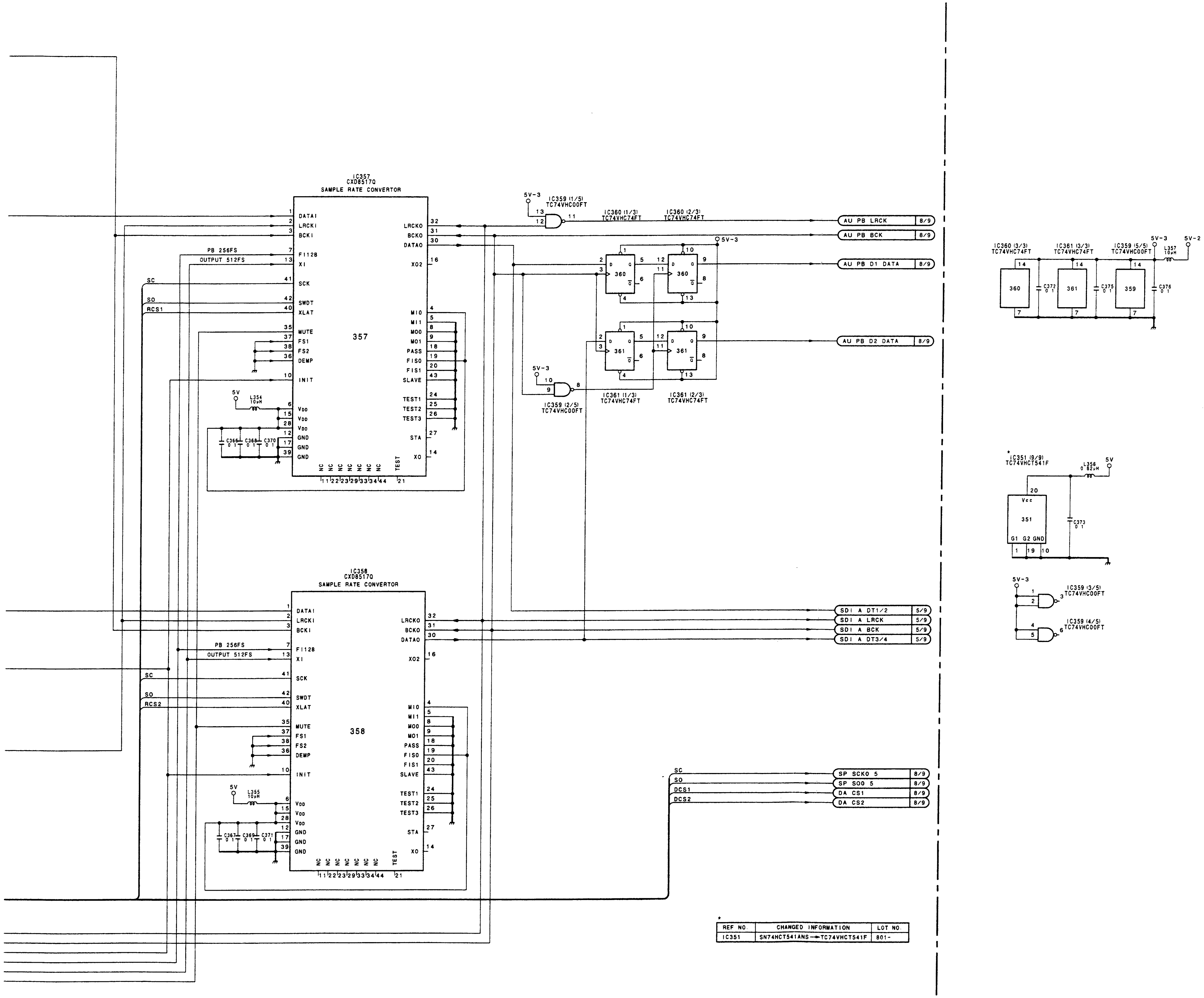

REF NO.	CHANGED INFORMATION	LOT NO.
IC351	SN74HCT541ANS→TC74VHCT541F	801-

1

2

3

4

5

DV-17/17A (7/9)
BOARD SUFFIX : -14
MODEL DSR-60/60P

DV-17/17A (8/9): VIDEO/AUDIO DIGITAL PROCESS
AUDIO ANALOG PROCESS

DSR-60/60P

1

2

3

4

5

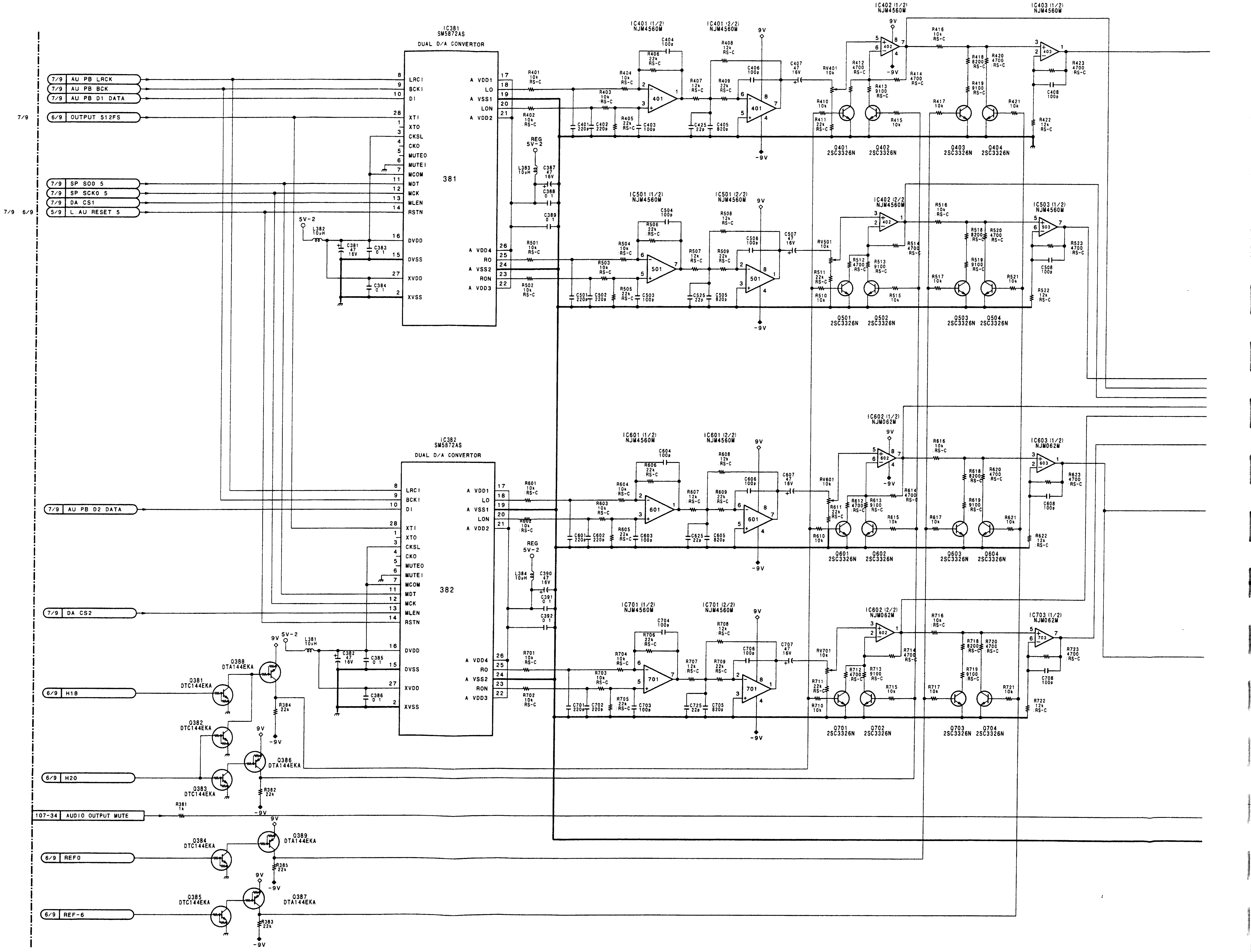

A | B | C | D | E | F | G | H

SONY-SP0754 / DRUCK 250

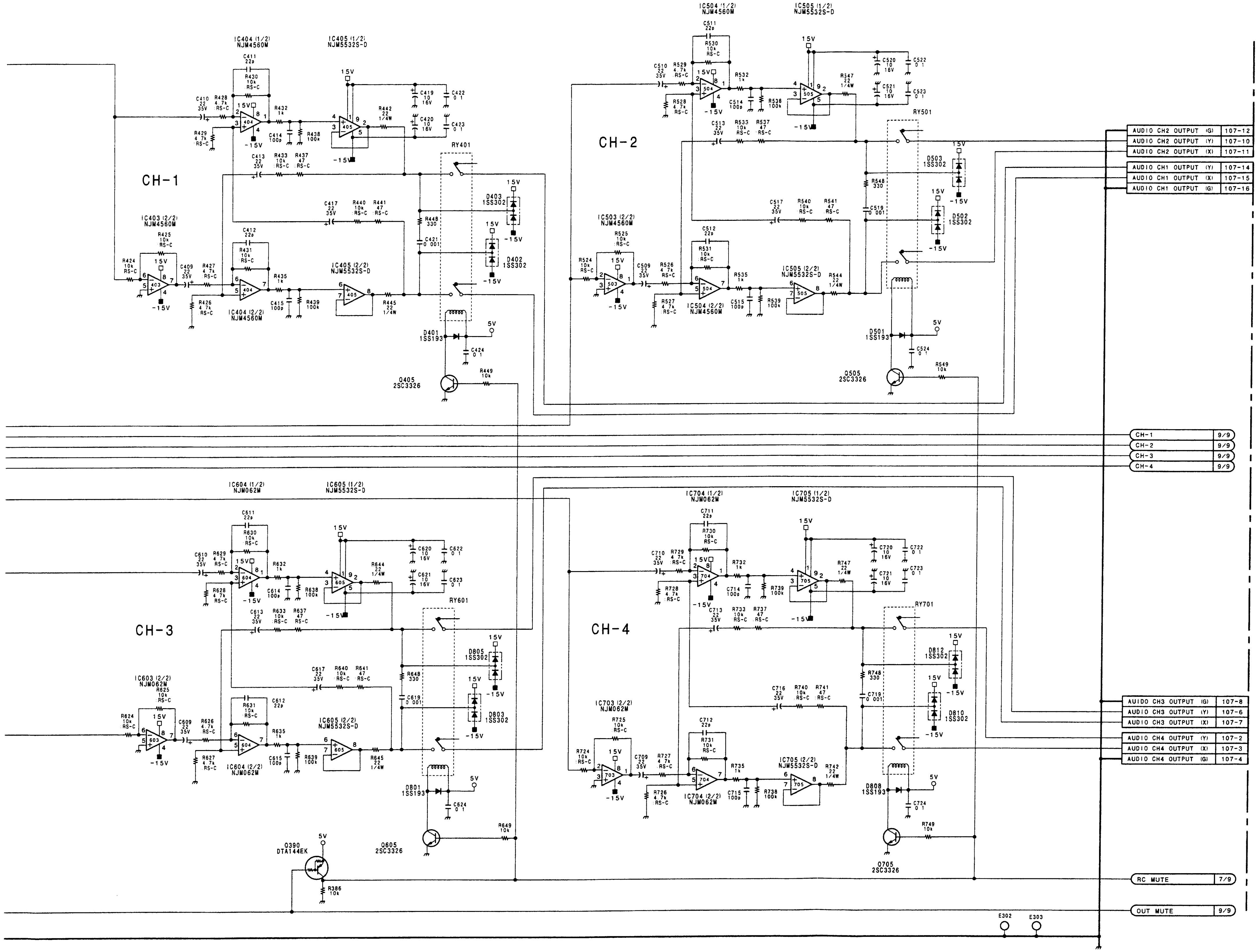

1 2 3 4 5

DV-17/17A (8/9)
BOARD SUFFIX : -14
MODEL DSR-60/60P

DSR-60/60P

DV-17/17A (9/9): VIDEO/AUDIO DIGITAL PROCESS
AUDIO ANALOG PROCESS

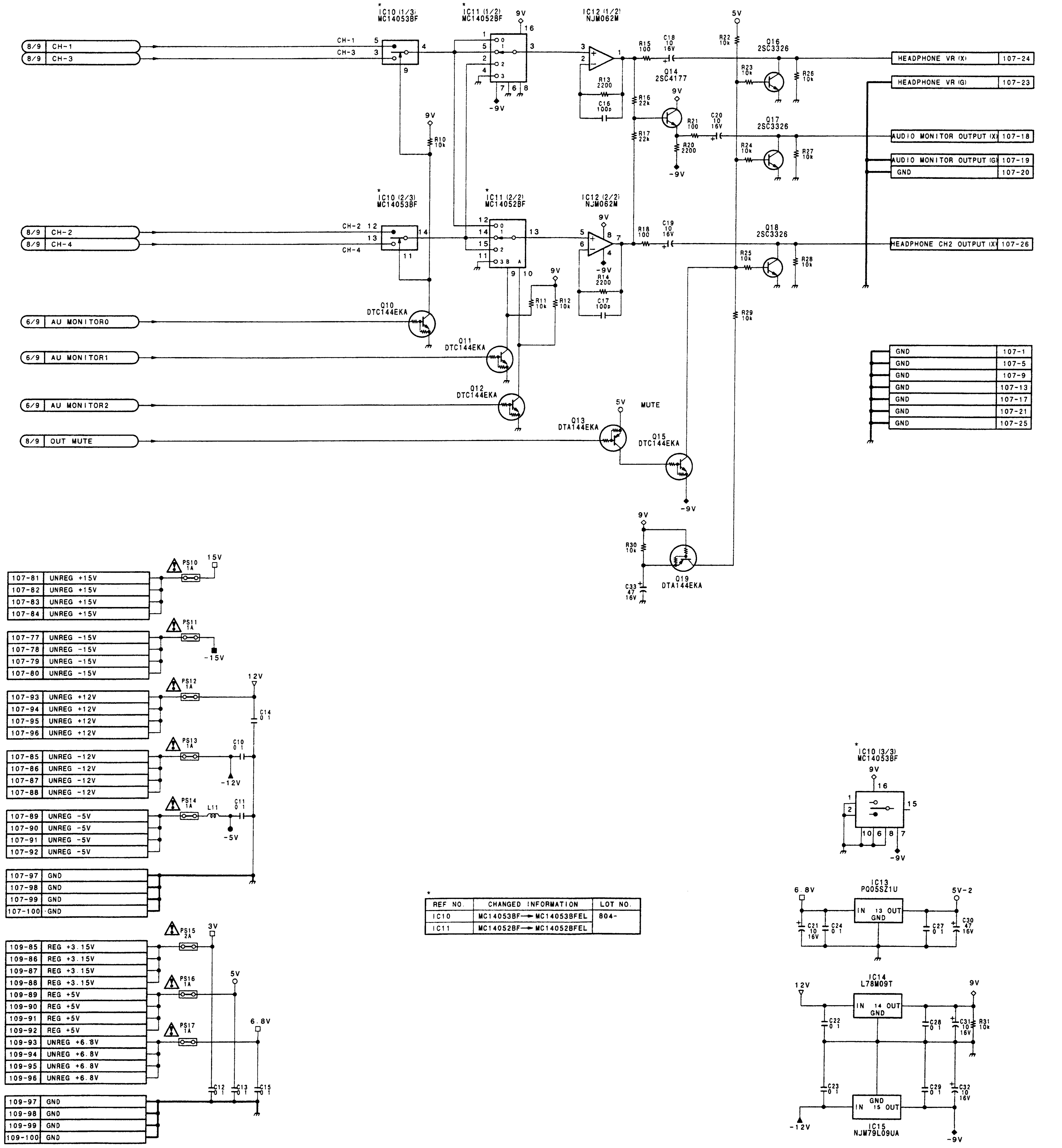

*

REF NO.	CHANGED INFORMATION	LOT NO.
IC10	MC14053BF → MC14053BFEL	804-
IC11	MC14052BF → MC14052BFEL	

DV-17/17A (9/9)
BOARD SUFFIX : -14
MODEL DSR-60/60P

DSR-60/60P

DV-17/17A (1/9): VIDEO/AUDIO DIGITAL PROCESS AUDIO ANALOG PROCESS

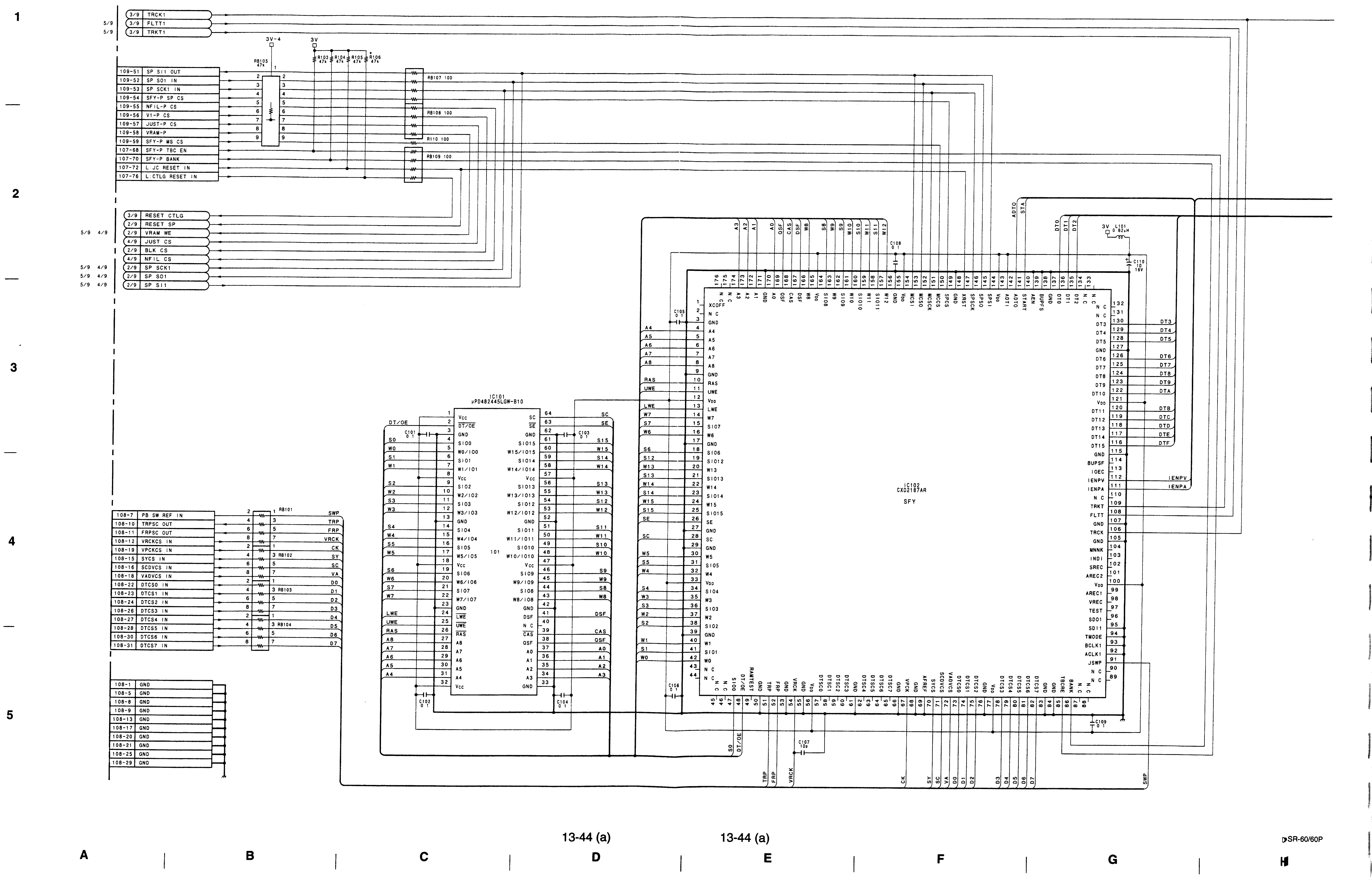

 DV-17/17A (1/9)

 DSR-60/60P

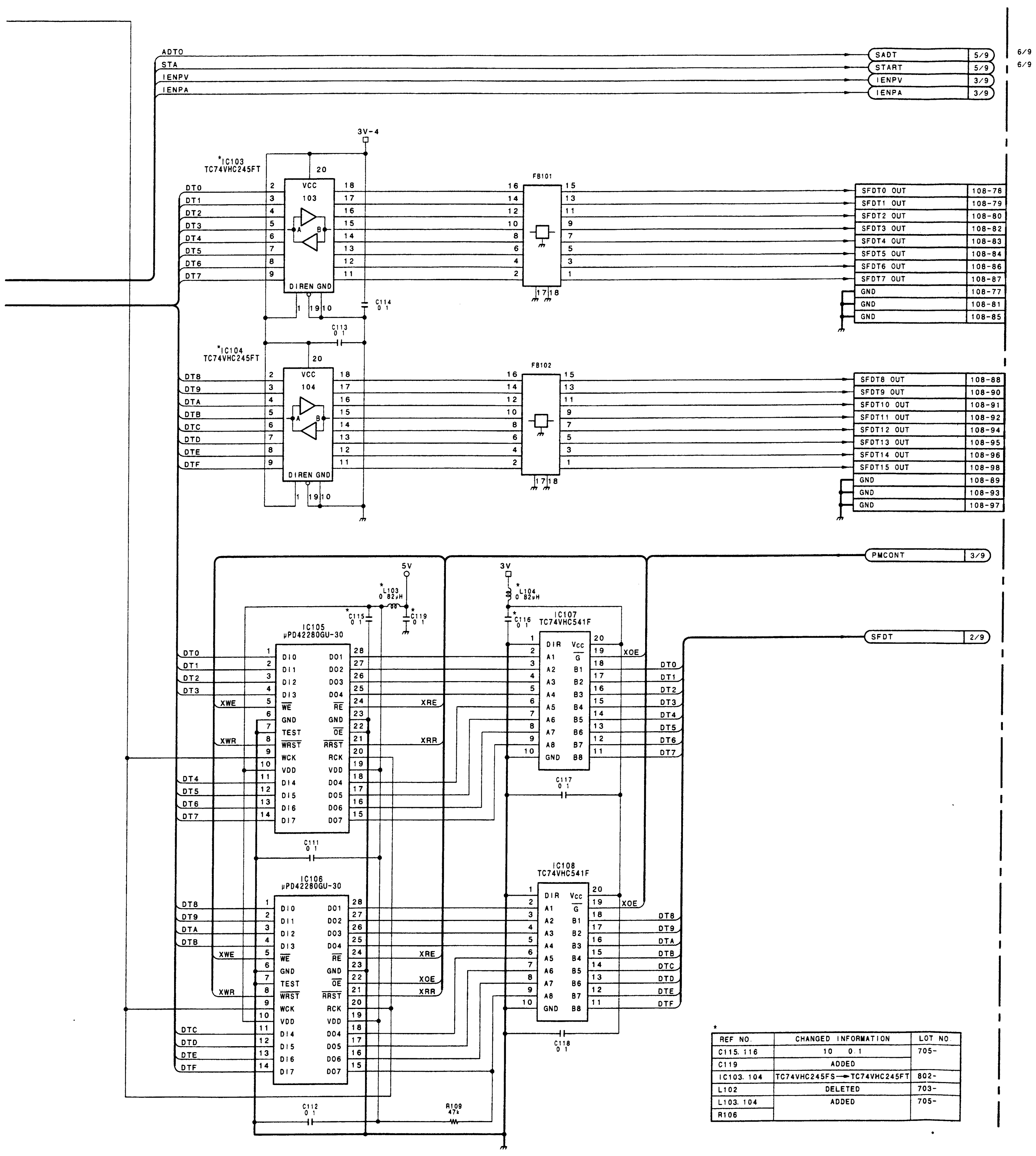

*

REF NO.	CHANGED INFORMATION	LOT NO.
C115, 116	10 0.1	705-
C119	ADDED	
IC103, 104	TC74VHC245FS → TC74VHC245FT	802-
L102	DELETED	703-
L103, 104	ADDED	705-
R106		

DV-17/17A (1/9)
BOARD SUFFIX : -12, 13
MODEL DSR-60/60P

 13-45 (a)

I | J | K | L | M | N | O | P

1 2 3 4 5

 DV-17/17A (2/9)

DSR-60/60P

DV-17/17A (2/9): VIDEO/AUDIO DIGITAL PROCESS AUDIO ANALOG PROCESS

DSR-60/60P

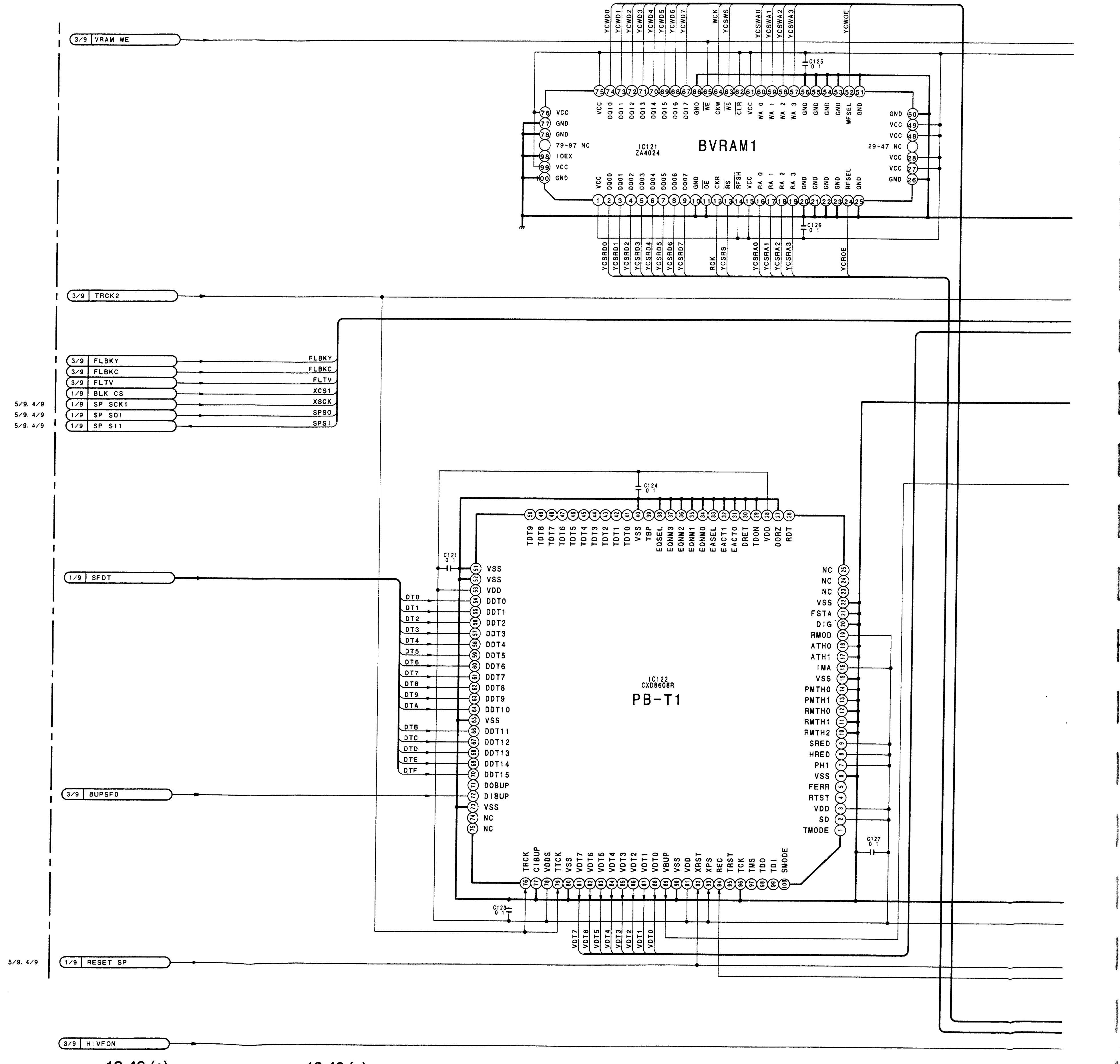

DSR-60/60P

SONY-SP0754 / DRUCK 256

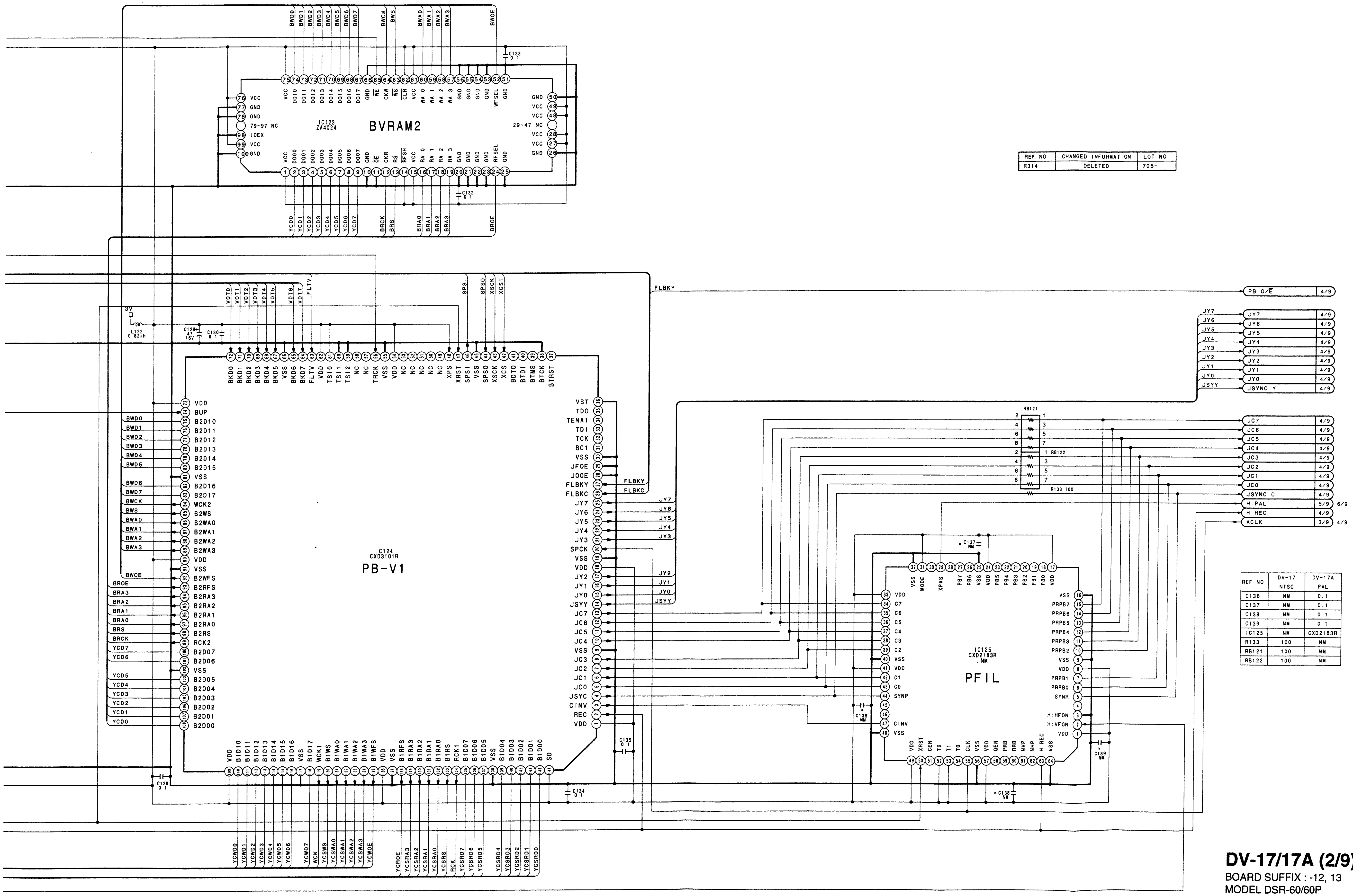

REF NO.	CHANGED INFORMATION	LOT NO.
R314	DELETED	705-

REF NO	DV-17 NTSC	DV-17A PAL
C136	NM	0.1
C137	NM	0.1
C138	NM	0.1
C139	NM	0.1
IC125	NM	CXD2183R
R133	100	NM
RB121	100	NM
RB122	100	NM

DV-17/17A (2/9)

BOARD SUFFIX : -12, 13
MODEL DSR-60/60P

DV-17/17A (3/9): VIDEO/AUDIO DIGITAL PROCESS AUDIO ANALOG PROCESS

1

2

3

4

5

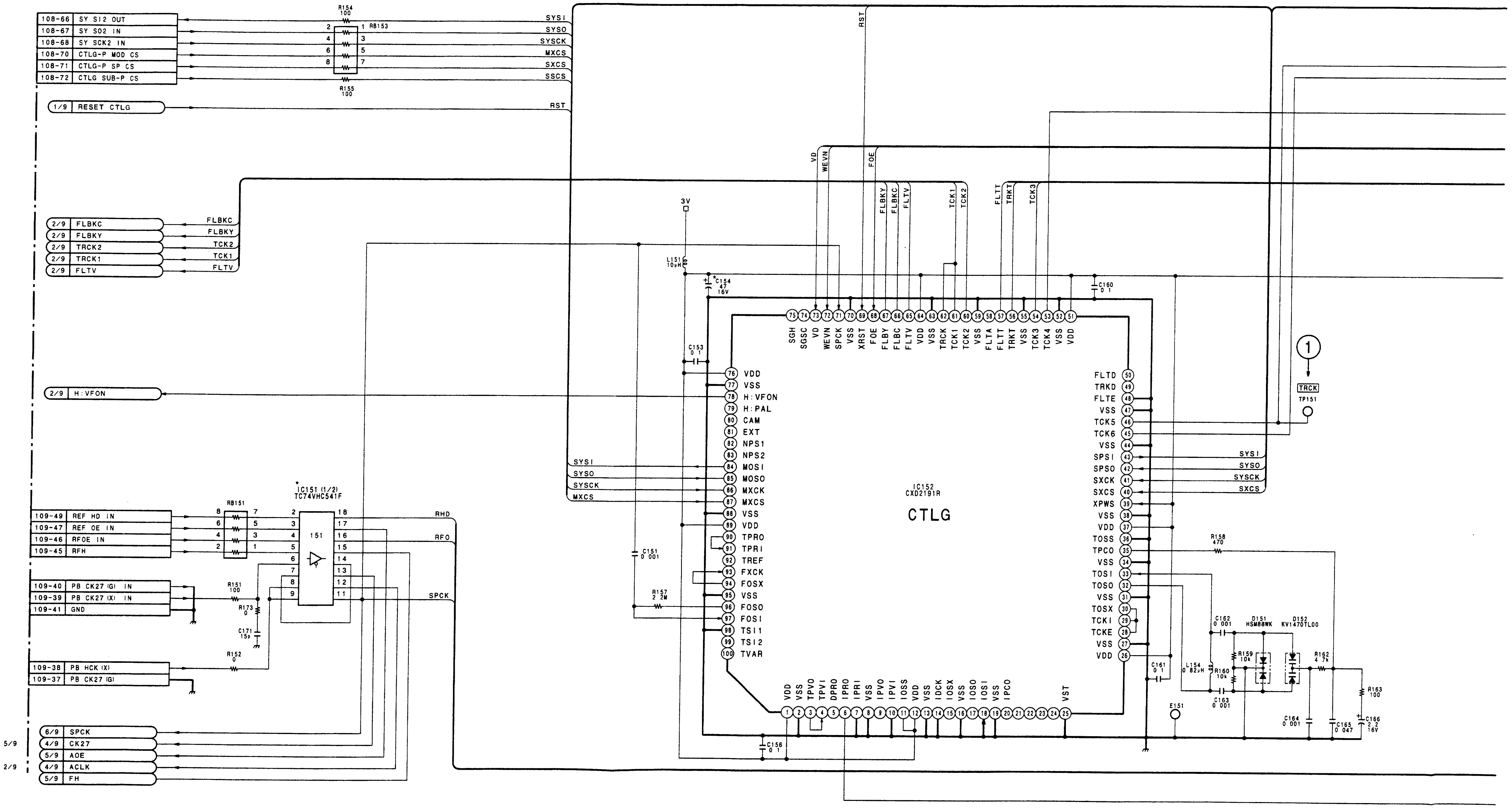

1 TP151 MODE: 75% Color Bar/PB (NTSC)
MODE: 100% Color Bar/PB (PAL)

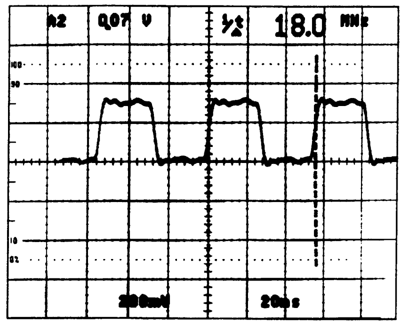

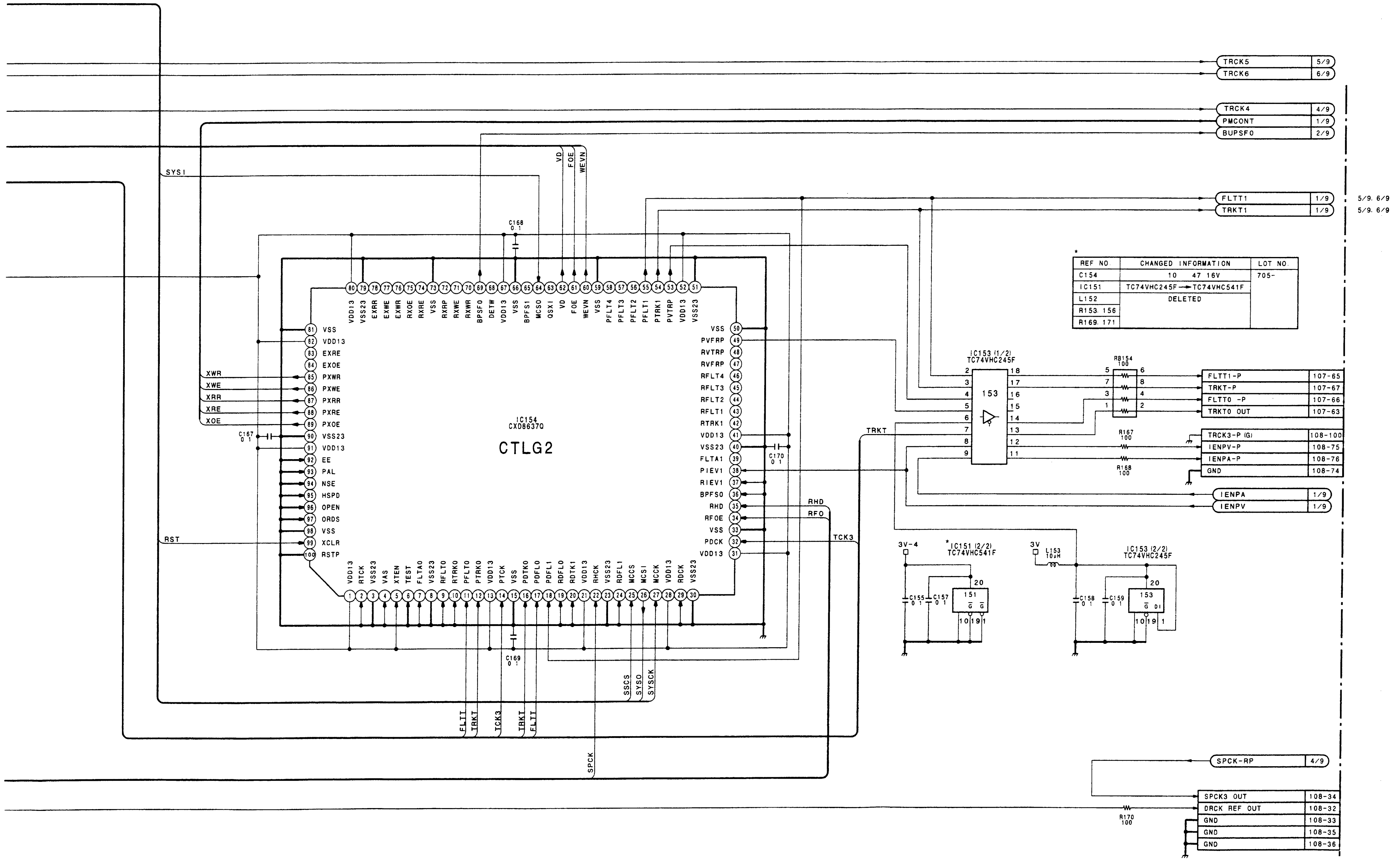

*

REF NO.	CHANGED INFORMATION	LOT NO.
C154	10 47 16V	705-
IC151	TC74VHC245F → TC74VHC541F	
L152	DELETED	
R153, 156		
R169, 171		

DV-17/17A (3/9)
BOARD SUFFIX : -12, 13
MODEL DSR-60/60P

DSR-60/60P

DV-17/17A (4/9): VIDEO/AUDIO DIGITAL PROCESS AUDIO ANALOG PROCESS

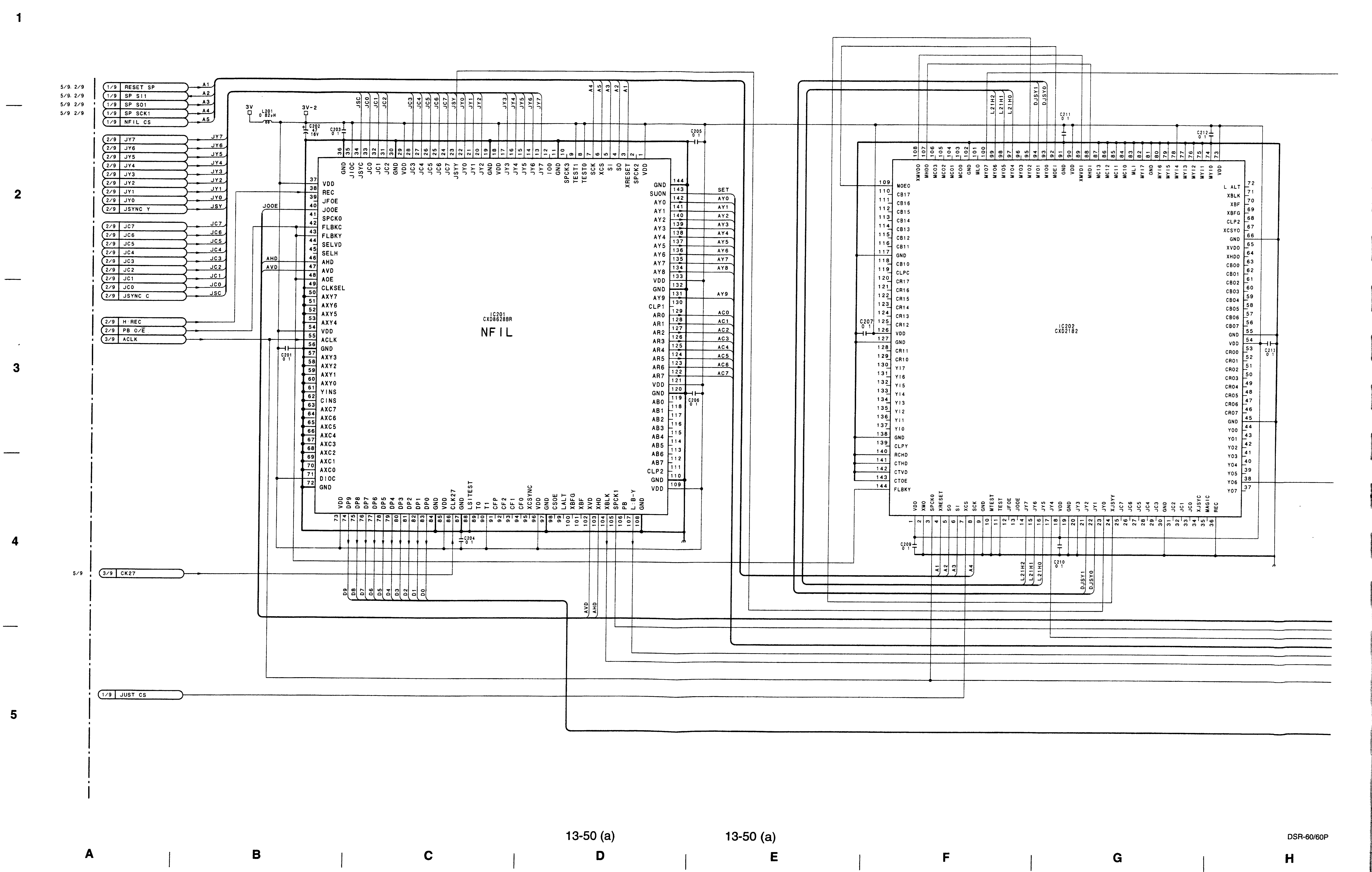

DSR-80/80P

DSR-80/80P

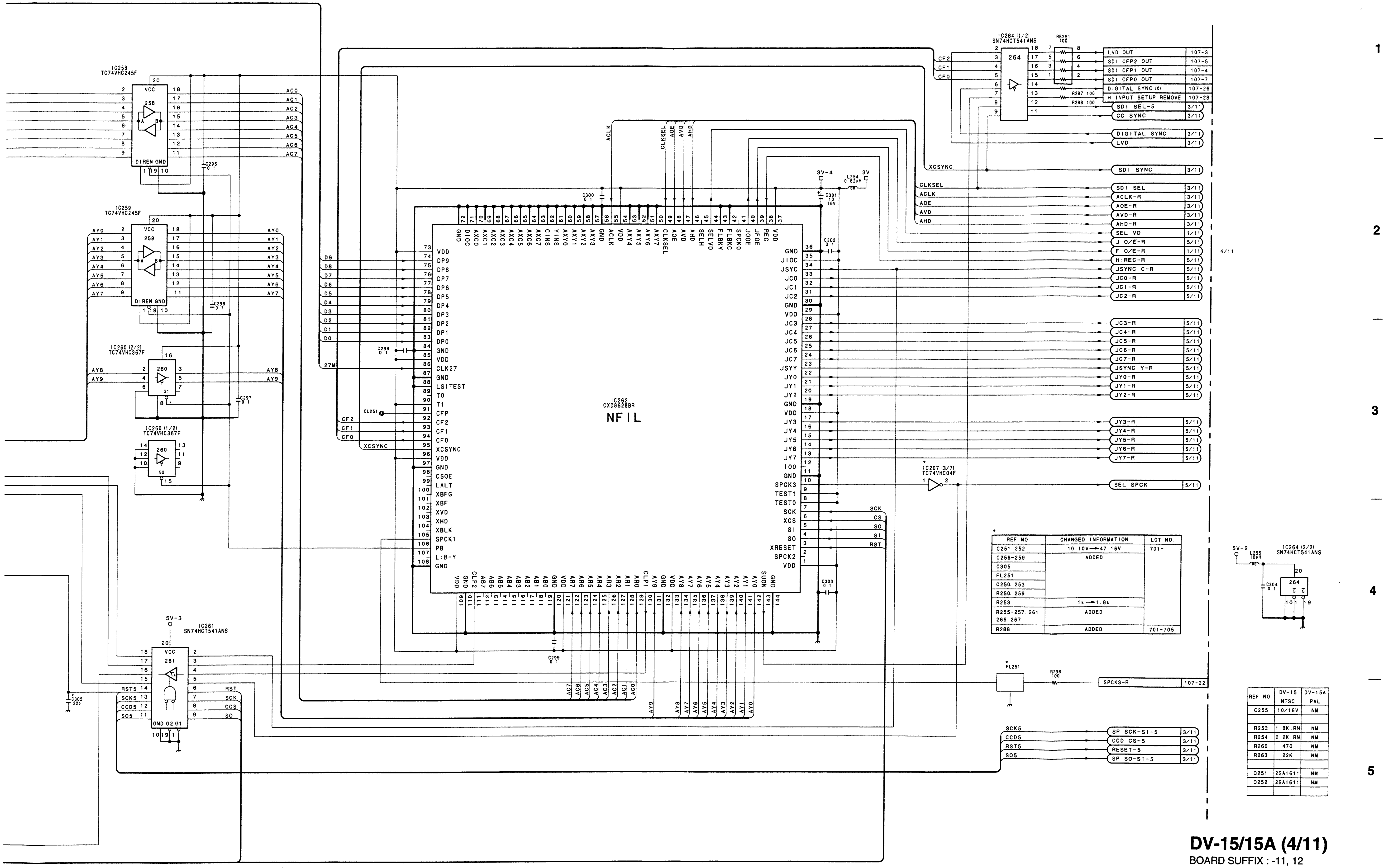

*

REF NO	CHANGED INFORMATION	LOT NO.
C251, 252	10 10V → 47 16V	701-
C256-259	ADDED	
C305		
FL251		
Q250, 253		
R250, 259		
R253	1k → 1.8k	
R255-257, 261 266, 267	ADDED	
R288	ADDED	701-705

REF NO	DV-15 NTSC	DV-15A PAL
C255	10/16V	NM
R253	1.8K:RN	NM
R254	2.2K:RN	NM
R260	470	NM
R263	22K	NM
Q251	2SA1611	NM
Q252	2SA1611	NM

DV-15/15A (4/11)

BOARD SUFFIX : -11, 12
MODEL DSR-80/80P

DV-15/15A (5/11): VIDEO DIGITAL IN/OUT PROCESS

DSR-80/80P

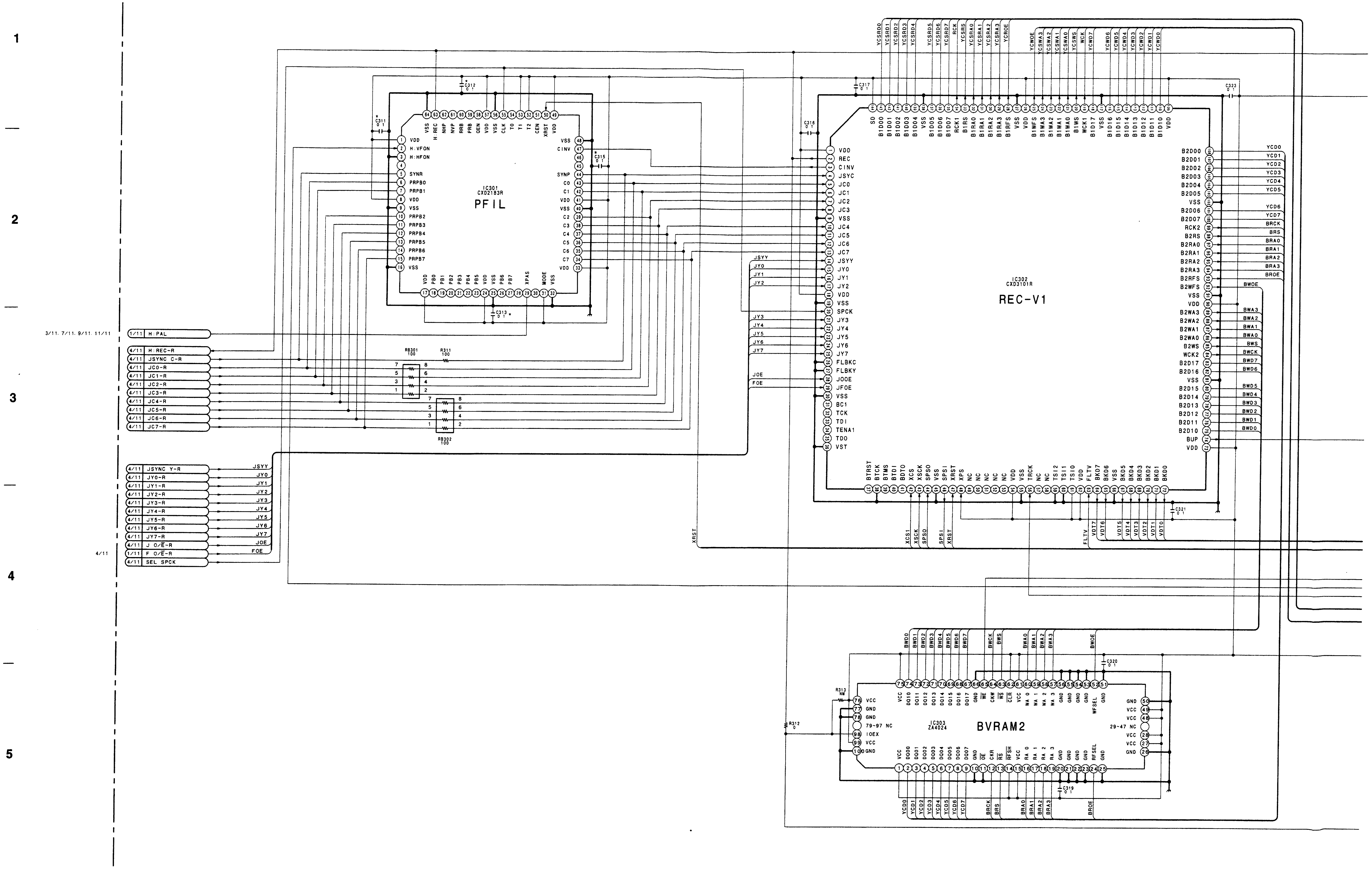

A B C D E F G H

SONY-SP0754 / DRUCK 262

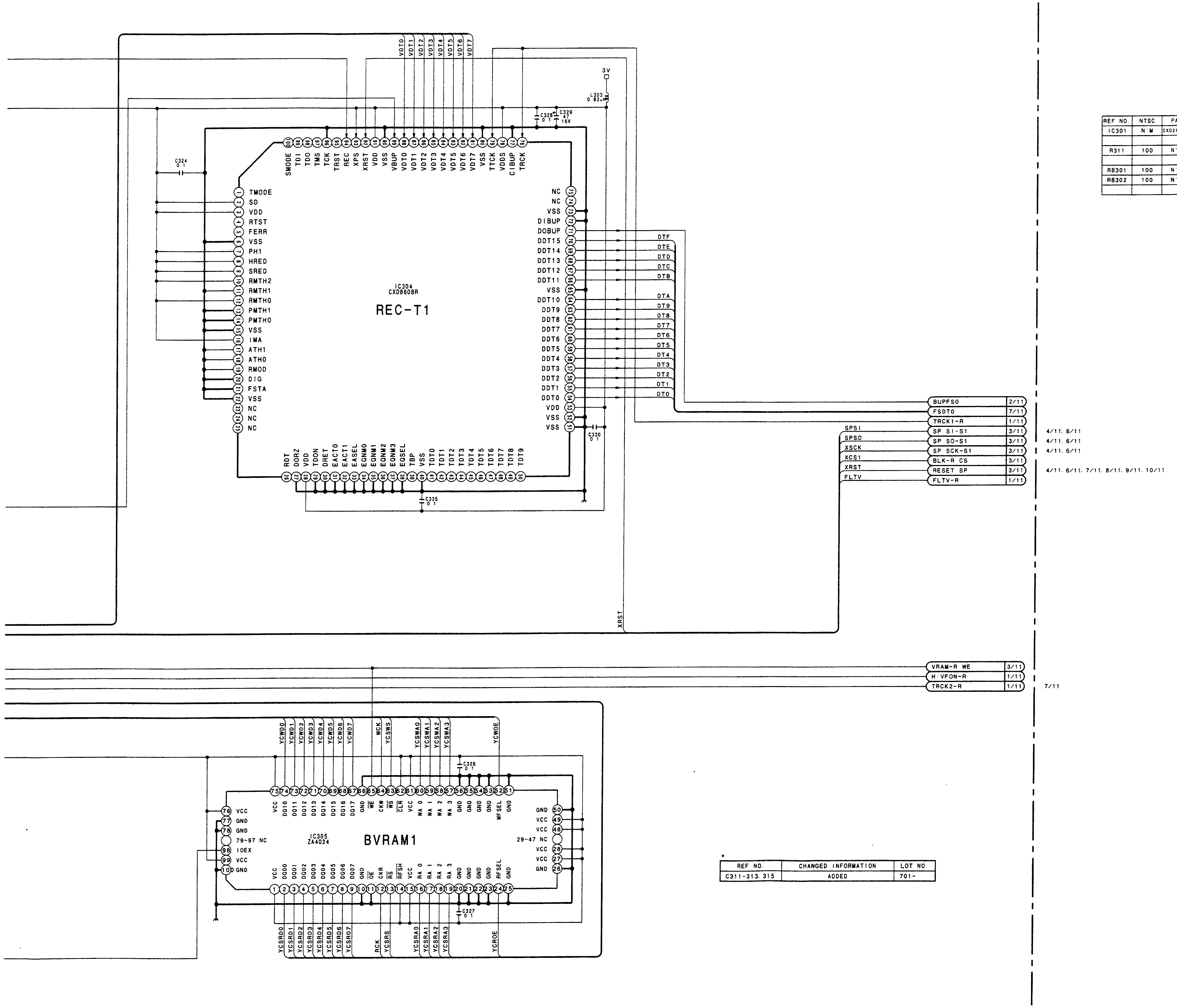

REF NO.	NTSC	PAL
IC301	N'M	CXD2183AR
R311	100	N'M
RB301	100	N'M
RB302	100	N'M

*

REF NO.	CHANGED INFORMATION	LOT NO.
C311-313, 315	ADDED	701-

DV-15/15A (5/11)

BOARD SUFFIX : -11, 12
MODEL DSR-80/80P

DV-15/15A (6/11): VIDEO DIGITAL IN/OUT PROCESS

DSR-80/80P

1

—

2

—

3

—

4

—

5

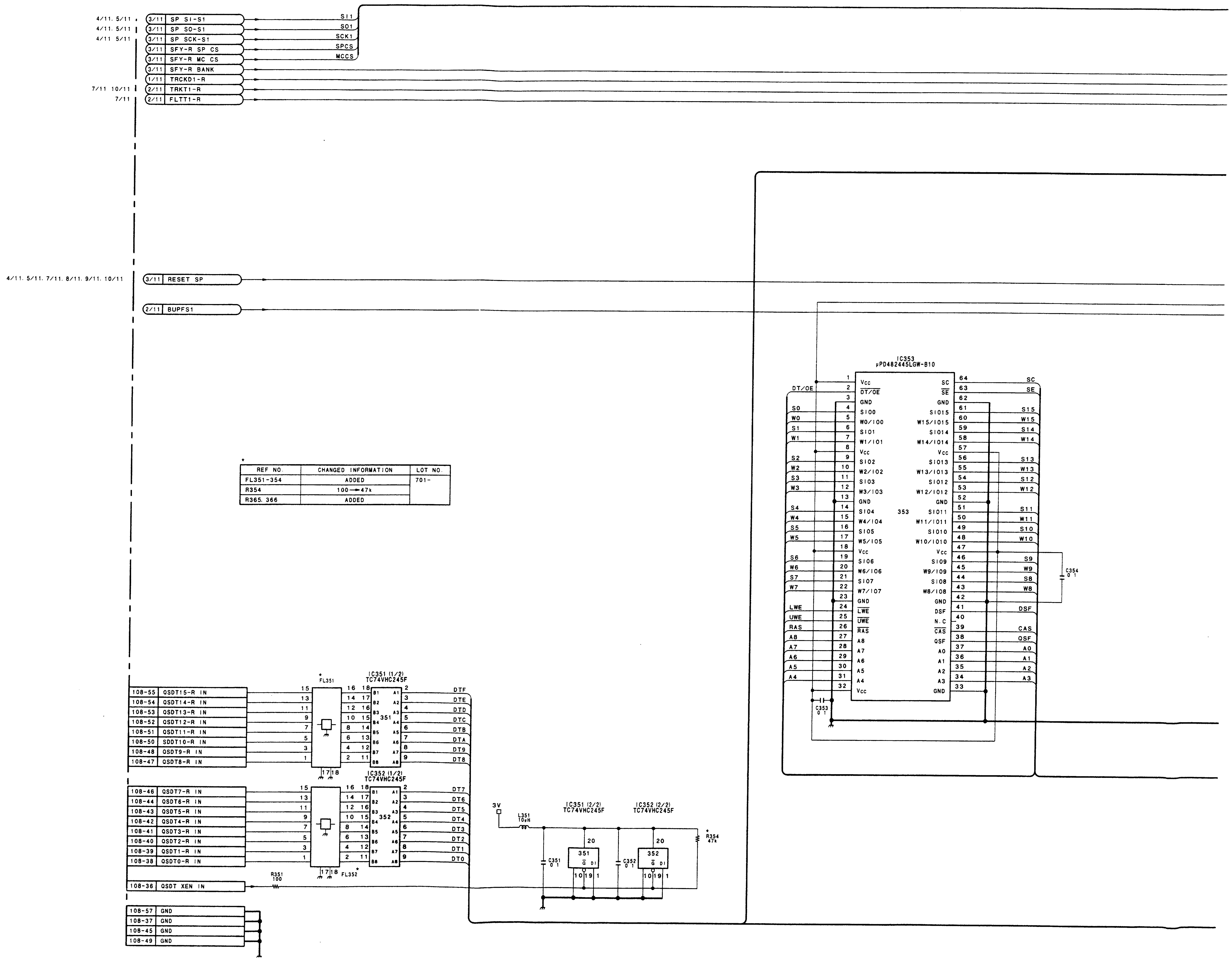

*

REF NO.	CHANGED INFORMATION	LOT NO.
FL351-354	ADDED	701-
R354	100 → 47k	
R365, 366	ADDED	

A | B | C | D | E | F | G | H

SONY-SP0754 / DRUCK 264

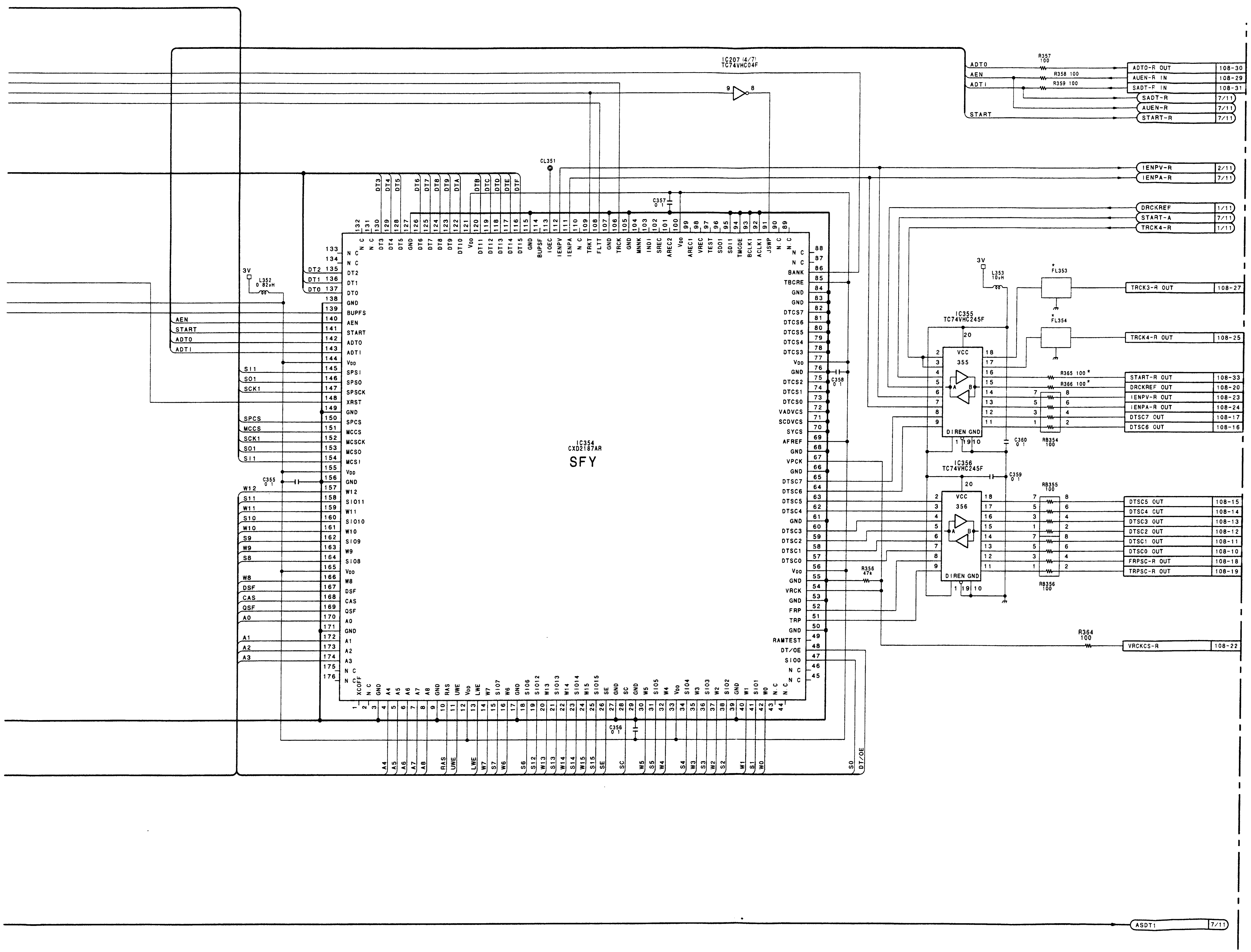

1
2
3
4
5

DV-15/15A (6/11)

BOARD SUFFIX : -11, 12
MODEL DSR-80/80P

DV-15/15A (7/11): VIDEO DIGITAL IN/OUT PROCESS

DSR-80/80P

DSR-80/80P

1

2

3

4

5

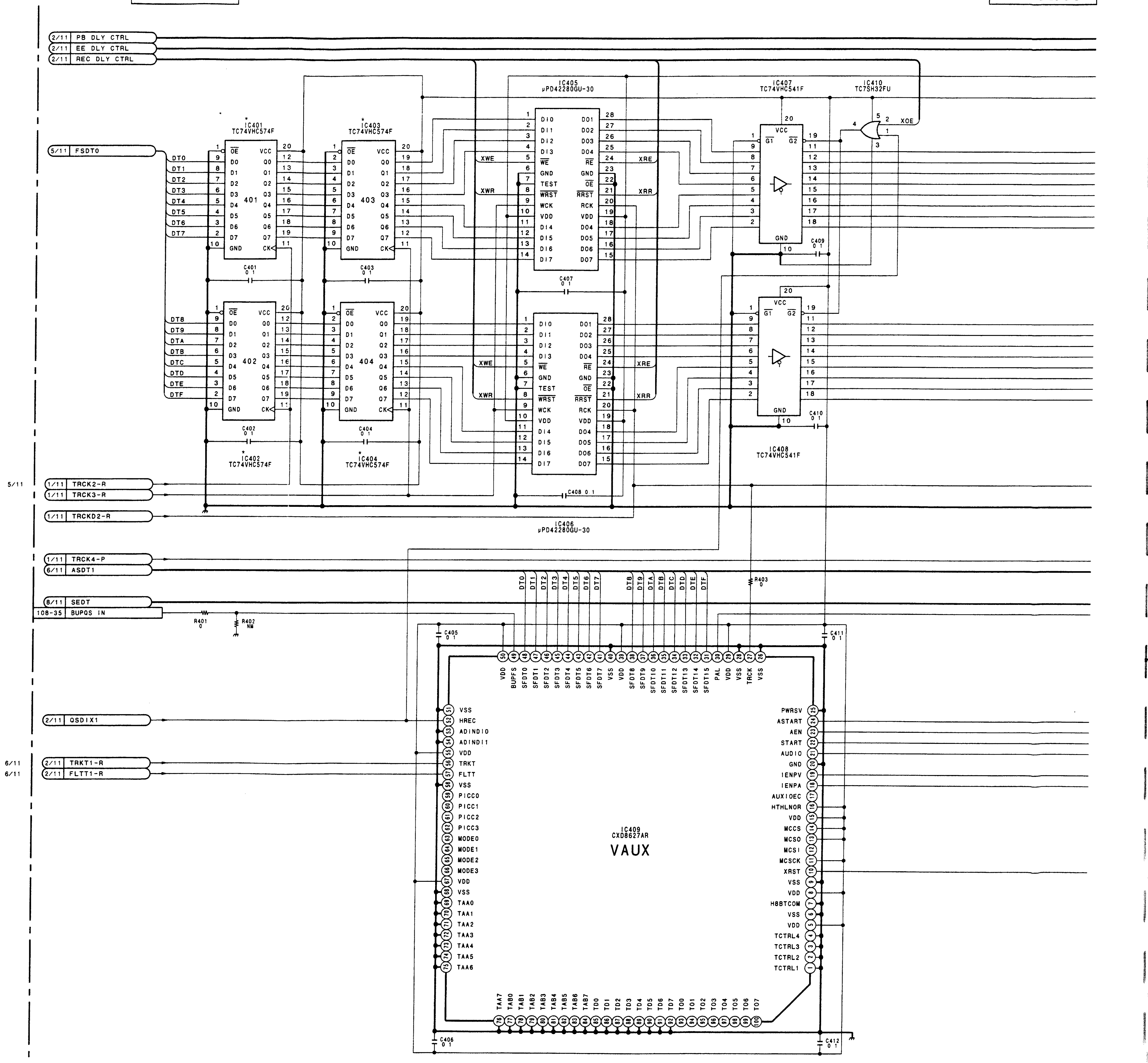

D SR-80/80P

A | B | C | D | E | F | G | H

SONY-SP0754 / DRUCK 266

 DV-15/15A (7/11)

 DSR-80/80P

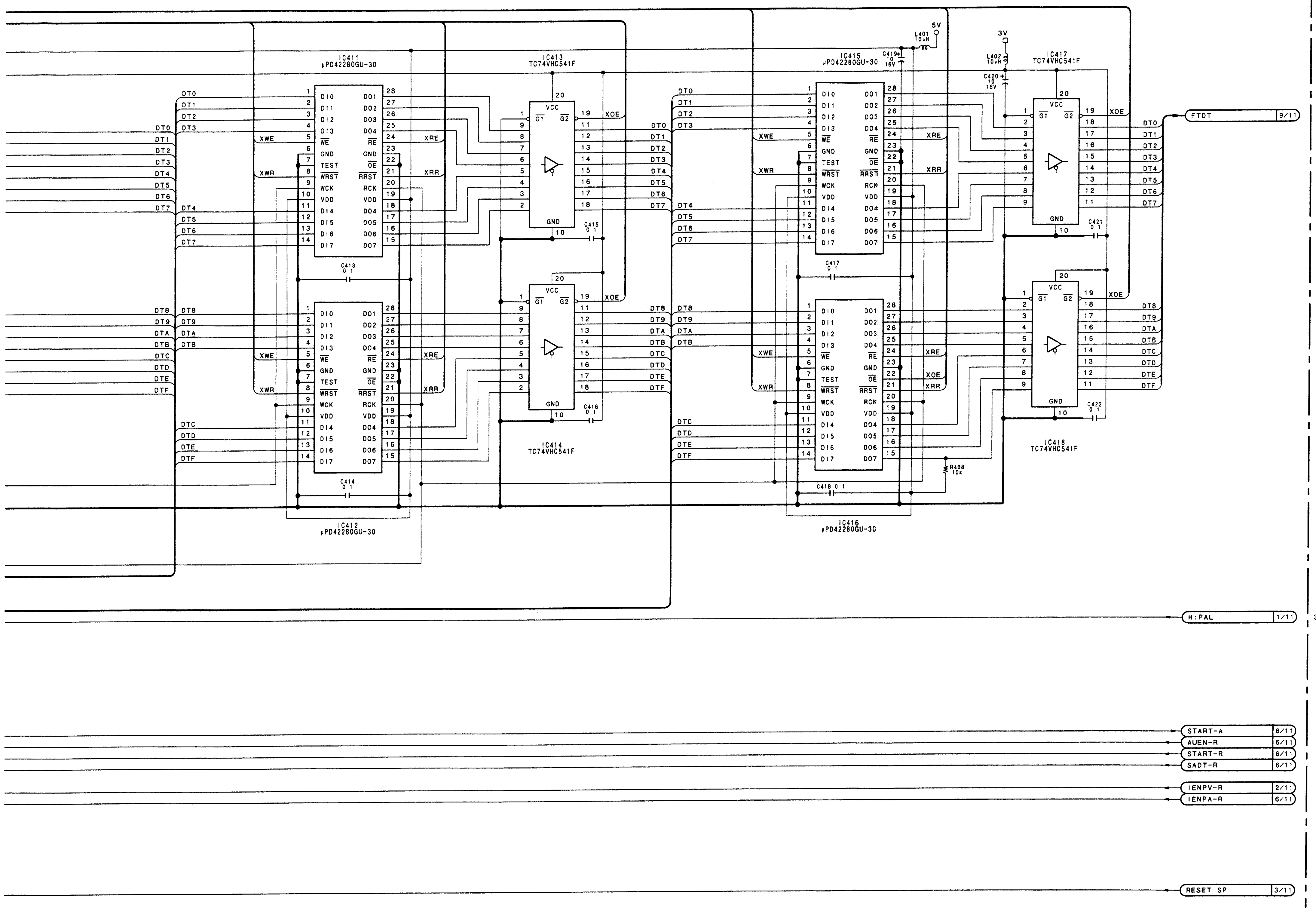

REF NO	CHANGED INFORMATION	LOT NO.
IC401-404	TC74VHCT574F → TC74VHC574F	701-

1 — 2 — 3 — 4 — 5

DV-15/15A (7/11)

BOARD SUFFIX : -11, 12
MODEL DSR-80/80P

DV-15/15A (8/11): VIDEO DIGITAL IN/OUT PROCESS

DSR-80/80P

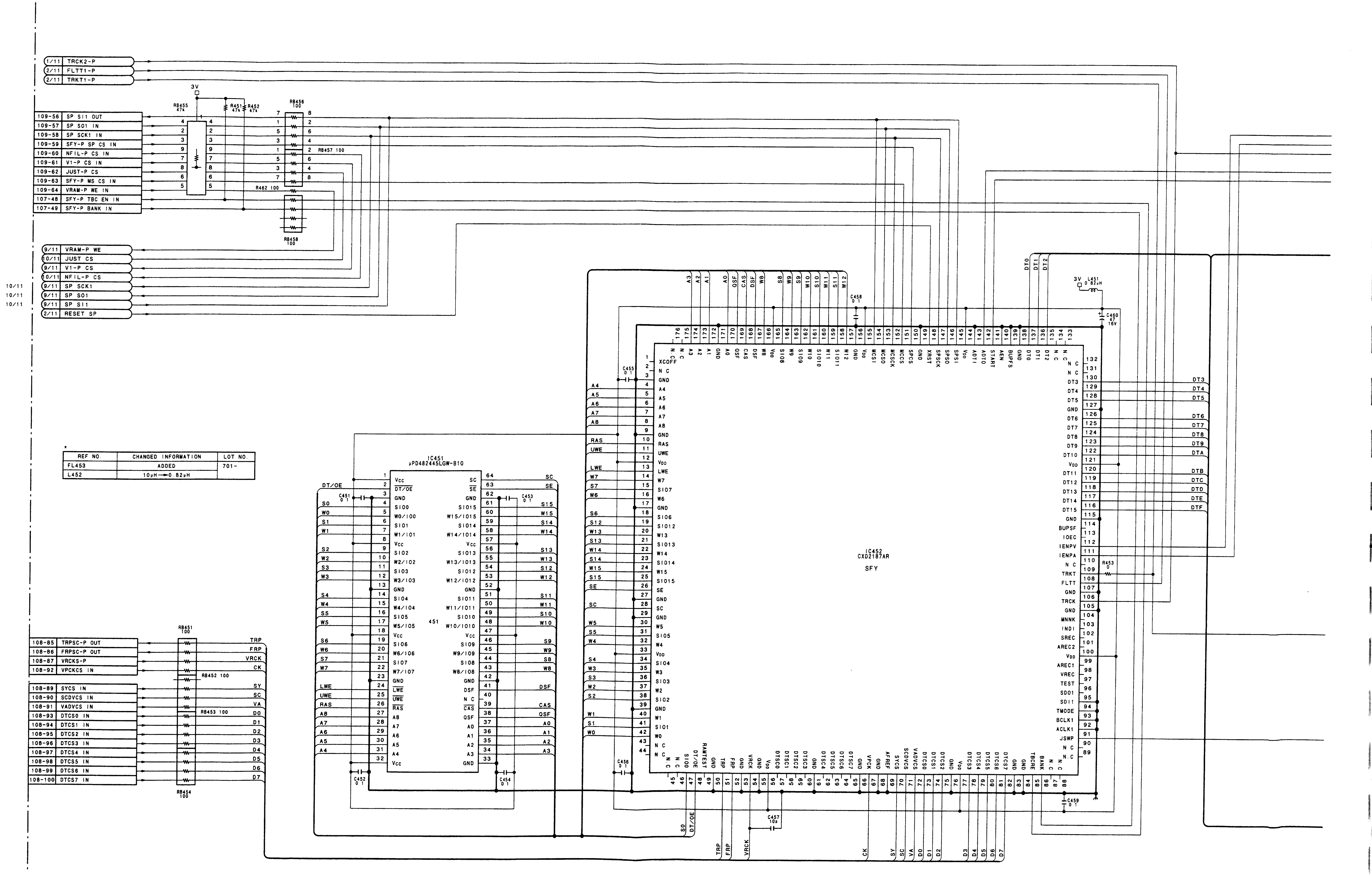

*

REF NO.	CHANGED INFORMATION	LOT NO.
FL453	ADDED	701-
L452	10μH → 0.82μH	

DSR-80/80P

A | B | C | D | E | F | G | H

SONY-SP0754 / DRUCK 268

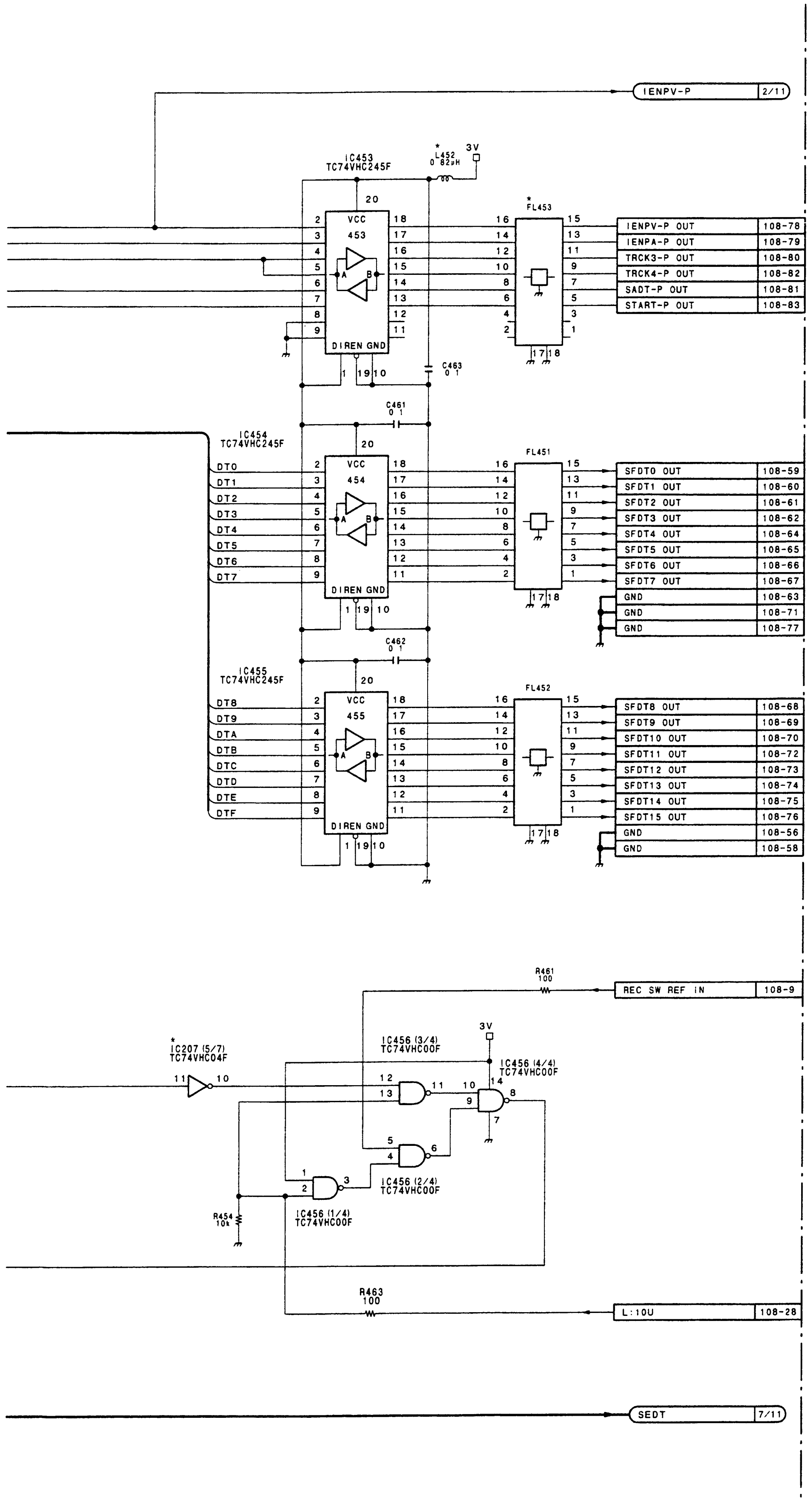

DV-15/15A (8/11)
BOARD SUFFIX : -11, 12
MODEL DSR-80/80P

DV-15/15A (9/11): VIDEO DIGITAL IN/OUT PROCESS

DSR-80/80P

DSR-80/80P

1

—

2

—

3

—

4

—

5

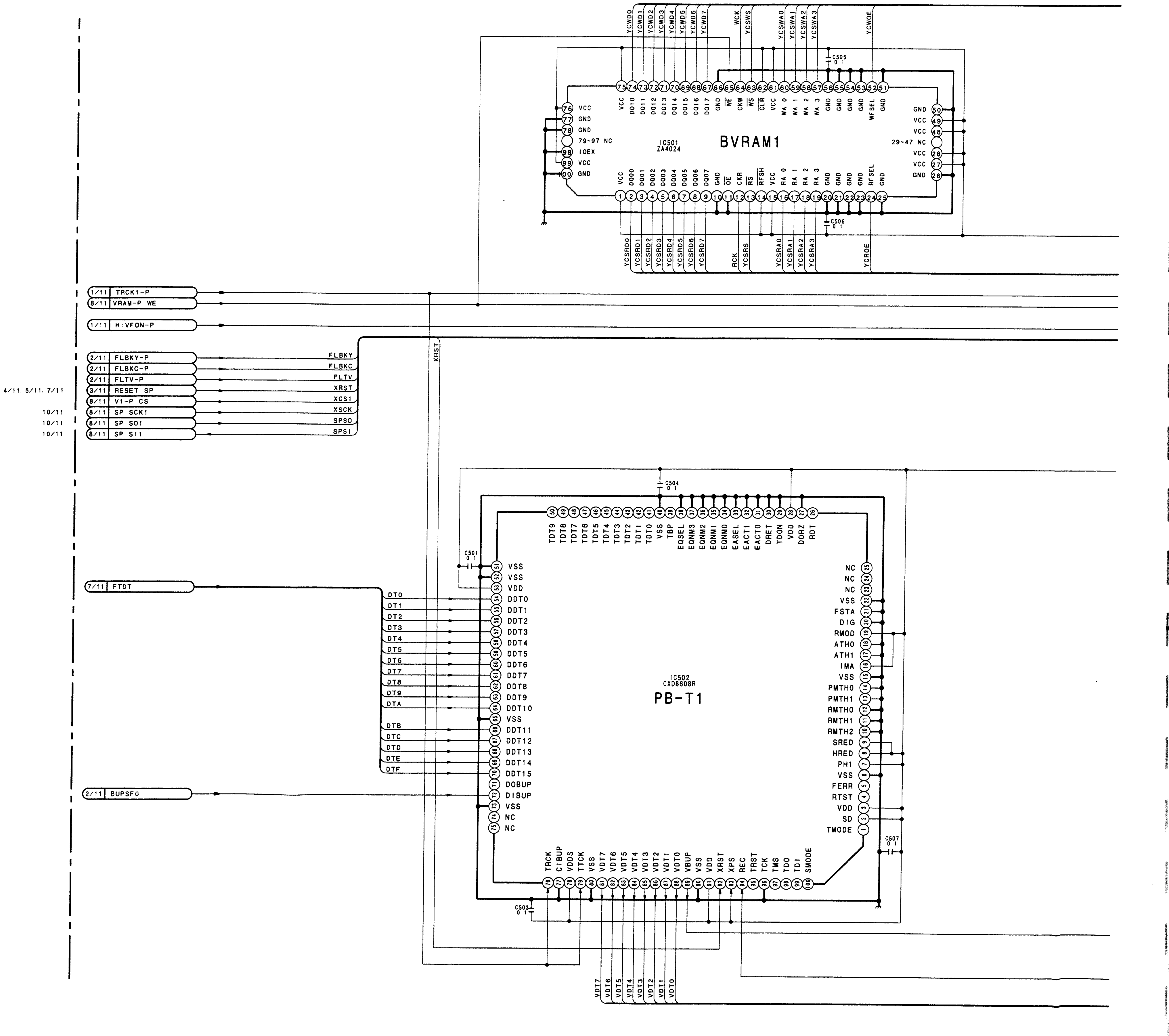

DSR-80/80P

A	B	C	D	E	F	G	H

SONY-SP0754 / DRUCK 270

DSR-80/80P

1

2

3

4

5

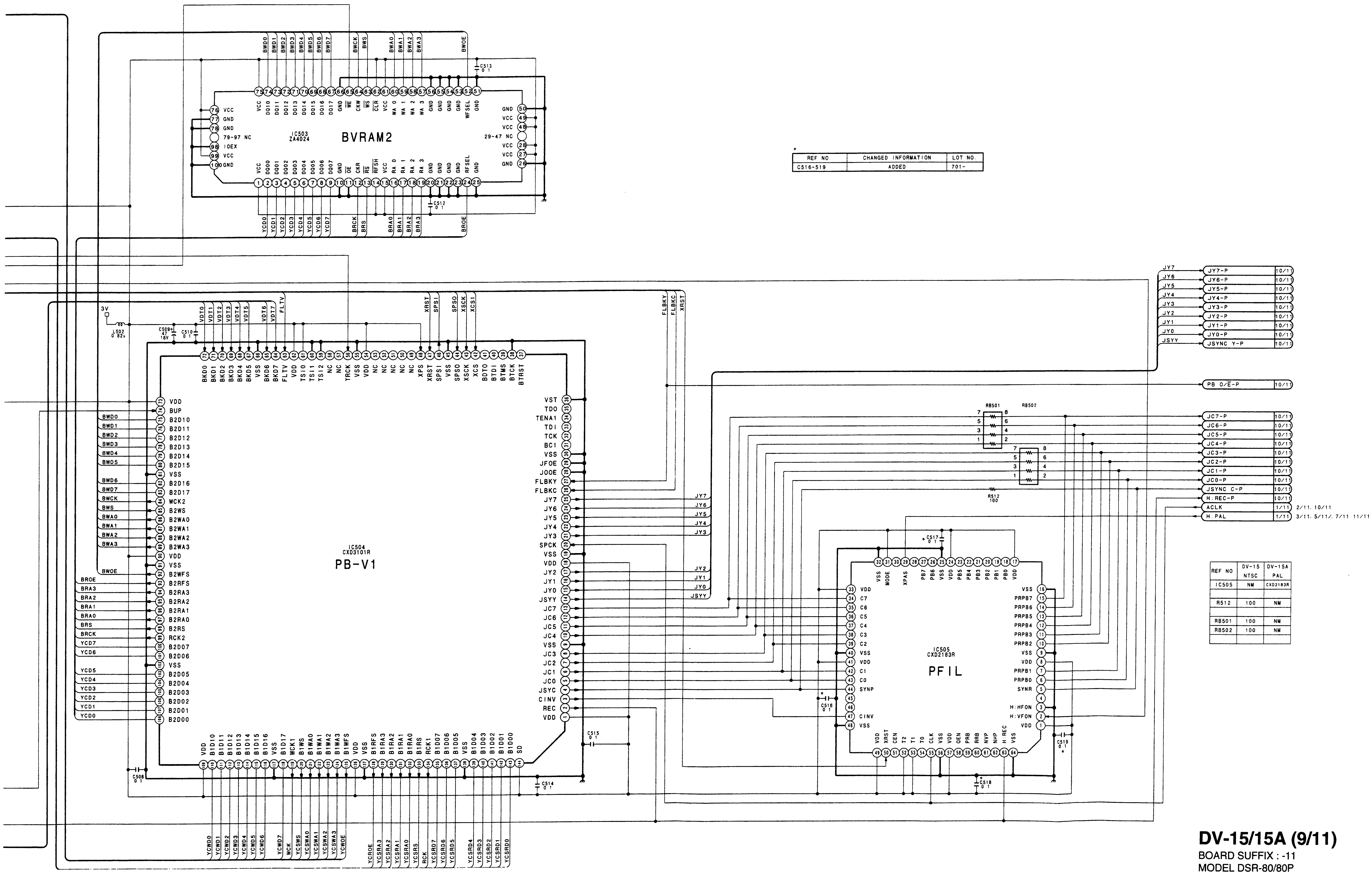

*

REF NO.	CHANGED INFORMATION	LOT NO.
C516-519	ADDED	701-

REF NO	DV-15 NTSC	DV-15A PAL
IC505	NM	CXD2183R
R512	100	NM
RB501	100	NM
RB502	100	NM

DV-15/15A (9/11)

BOARD SUFFIX : -11
MODEL DSR-80/80P

DV-15/15A (10/11): VIDEO DIGITAL IN/OUT PROCESS

DSR-80/80P

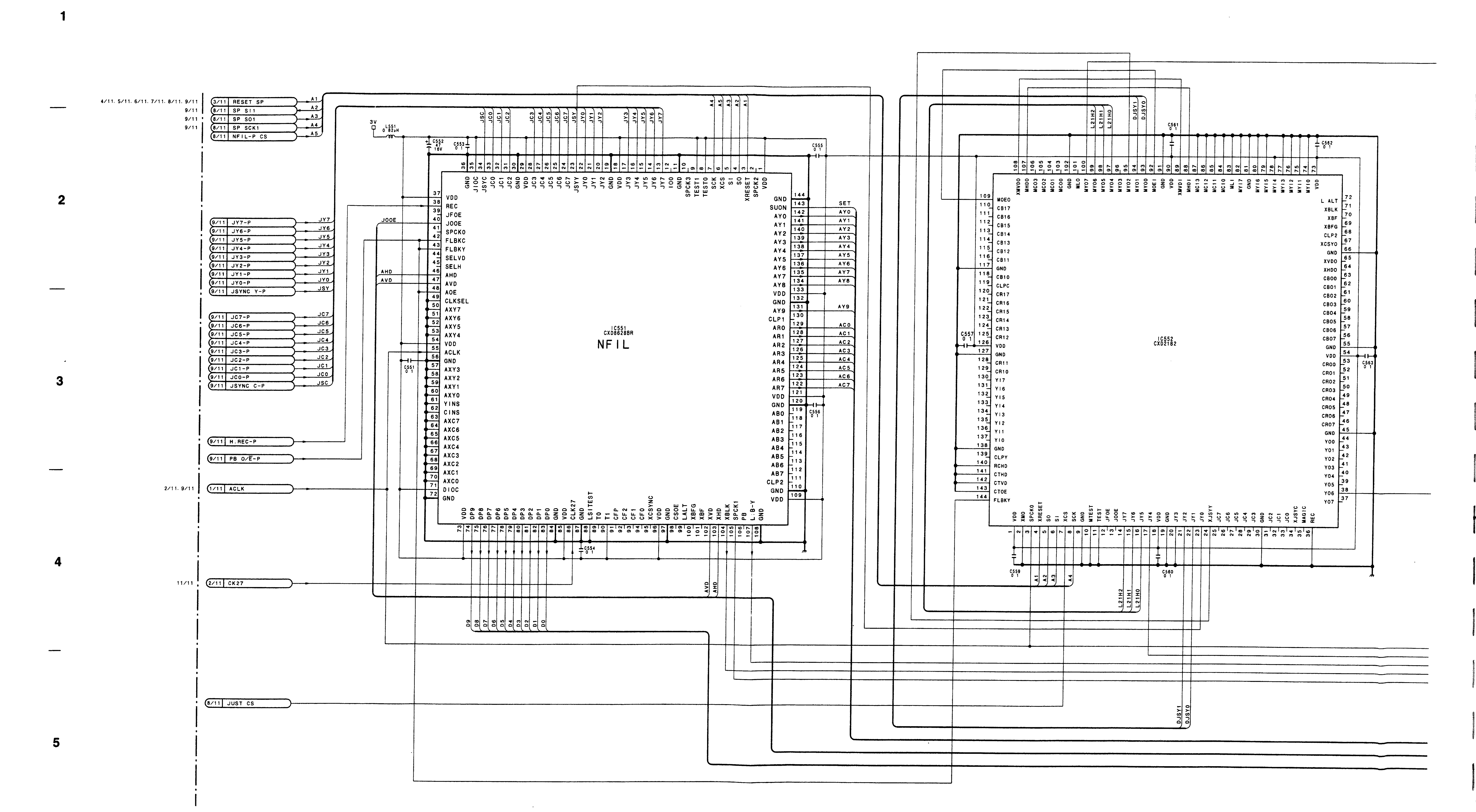

A B C D E F G H

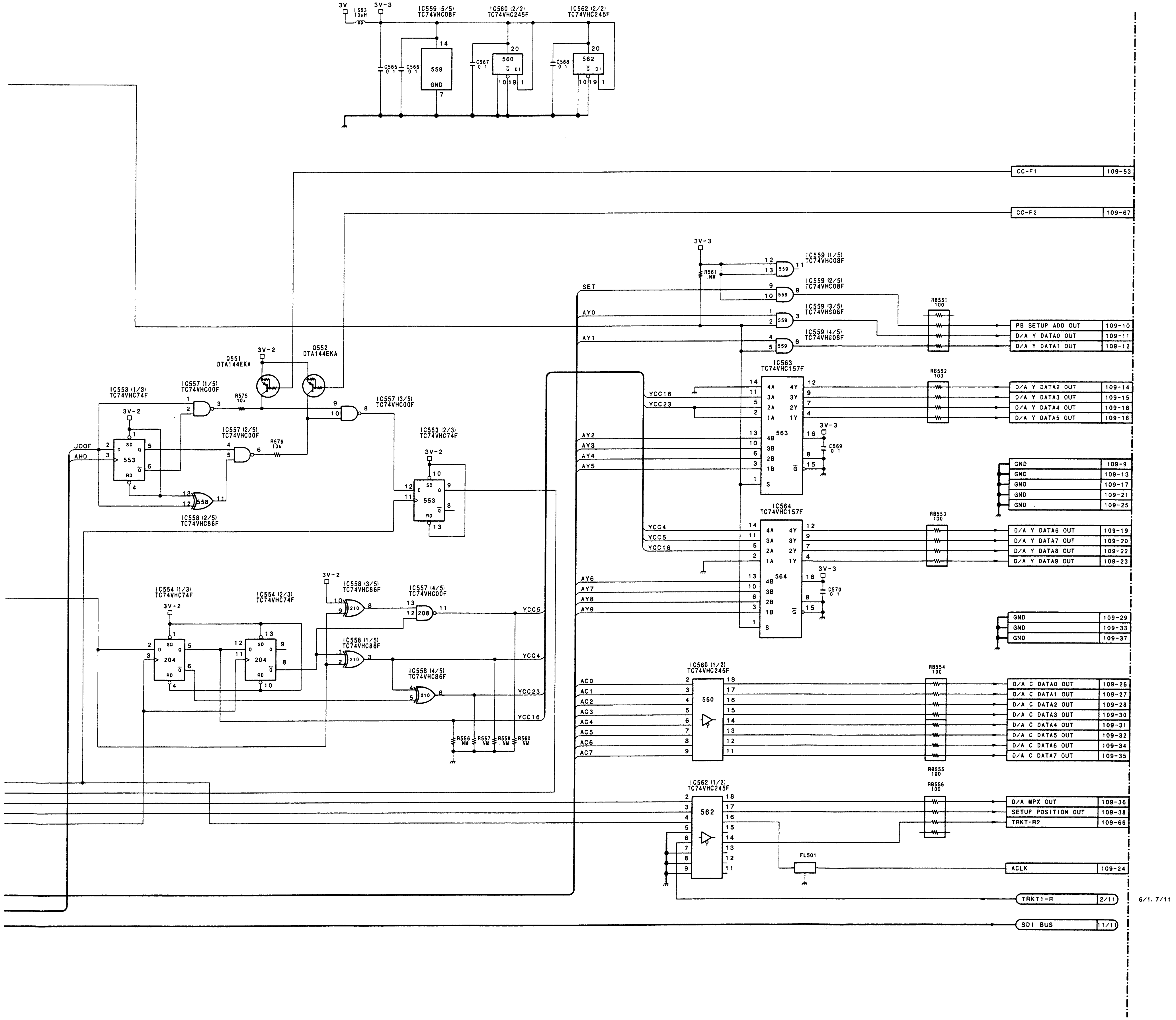

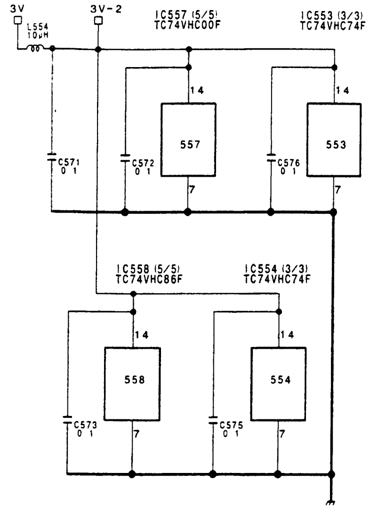

REF NO	DV-15 NTSC	DV-15A PAL
IC552	CXD2182	NM
IC553	TC74VHC74F	NM
IC554	TC74VHC74F	NM
IC557	TC74VHC00F	NM
IC558	TC74VHC86F	NM
Q551	DTA144EKA	NM
Q552	DTA144EKA	NM
R556	NM	0
R557	NM	0
R558	NM	0
R560	NM	0
R561	NM	0
R575	10K	NM
R576	10K	NM
C557	0.1	NM
C559	0.1	NM
C560	0.1	NM
C561	0.1	NM
C562	0.1	NM
C563	0.1	NM
C571	0.1	NM
C572	0.1	NM
C573	0.1	NM
C575	0.1	NM
C576	0.1	NM
L554	10UH	NM

DV-15/15A (10/11)

BOARD SUFFIX : -11, 12
MODEL DSR-80/80P

DV-15/15A (11/11): VIDEO DIGITAL IN/OUT PROCESS

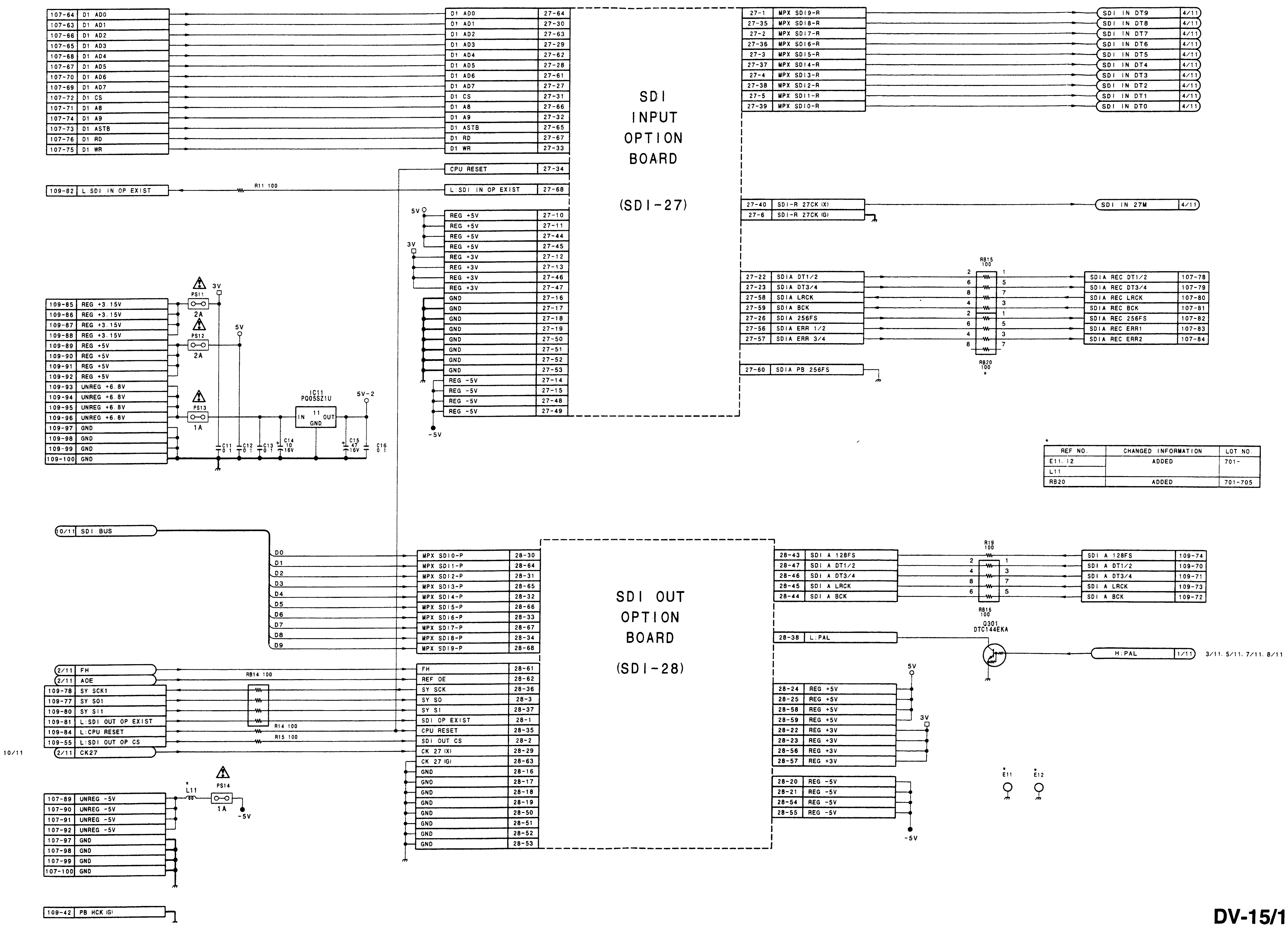

REF NO.	CHANGED INFORMATION	LOT NO.
E11, 12	ADDED	701-
L11		
RB20	ADDED	701-705

DV-15/15A (11/11)

BOARD SUFFIX : -11, 12
MODEL DSR-80/80P

DSR-60/60P

DV-17/17A (1/9): VIDEO/AUDIO DIGITAL PROCESS AUDIO ANALOG PROCESS

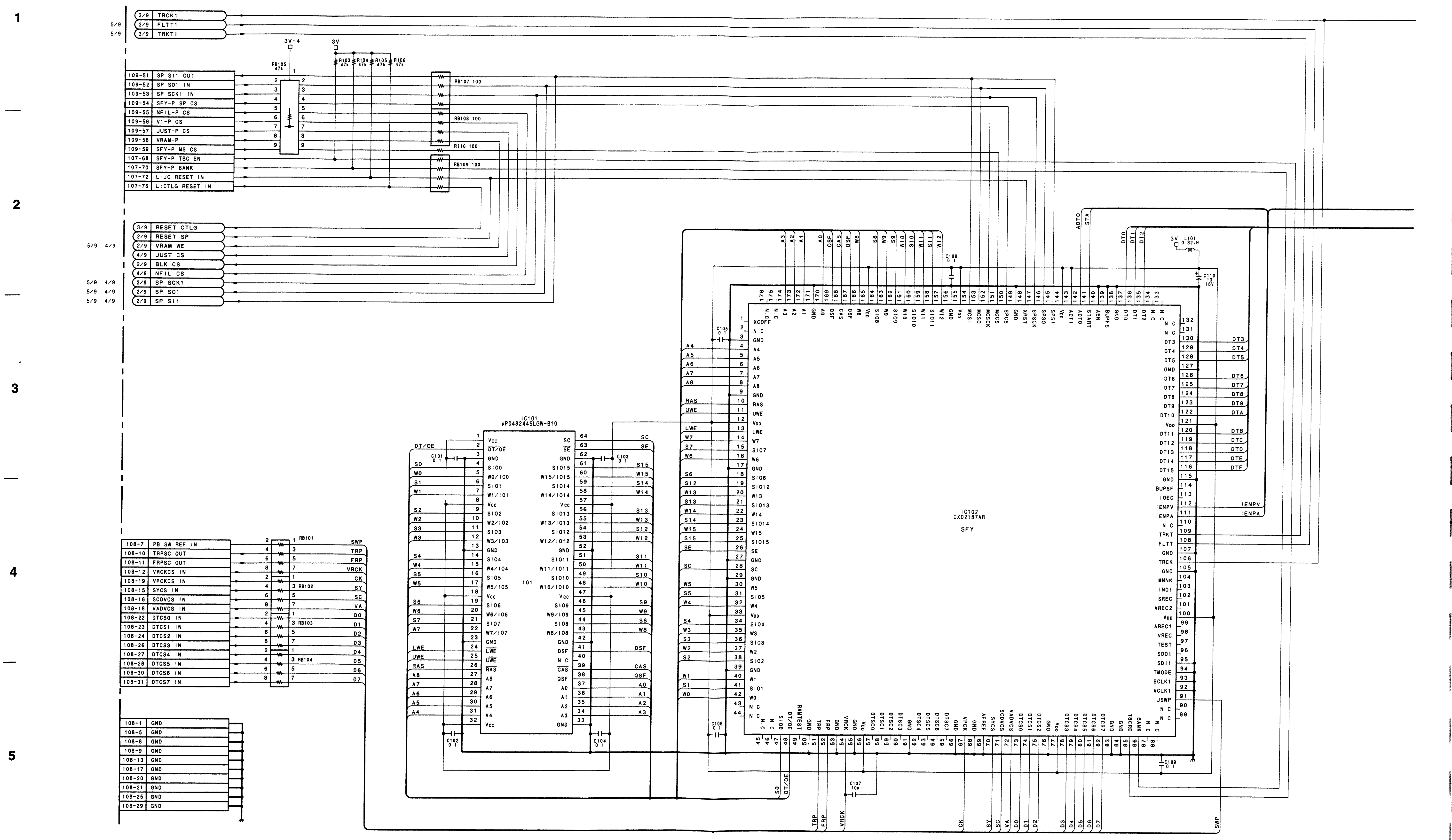

DSR-60/60P

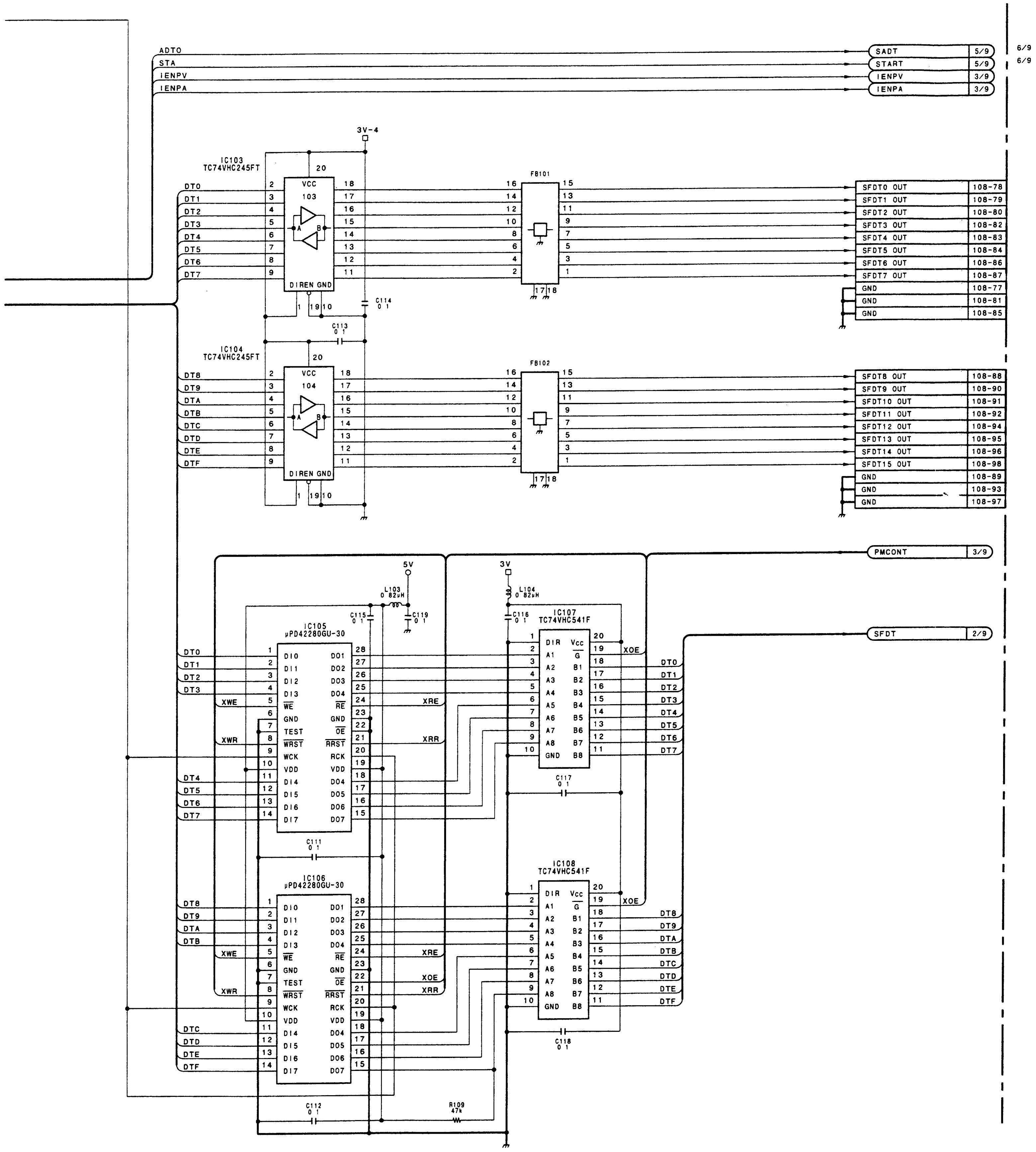

DV-17/17A (1/9)

BOARD SUFFIX : -14

MODEL DSR-60/60P

 DV-17/17A (2/9)

DSR-60/60P

DSR-60/60P

DV-17/17A (2/9): VIDEO/AUDIO DIGITAL PROCESS AUDIO ANALOG PROCESS

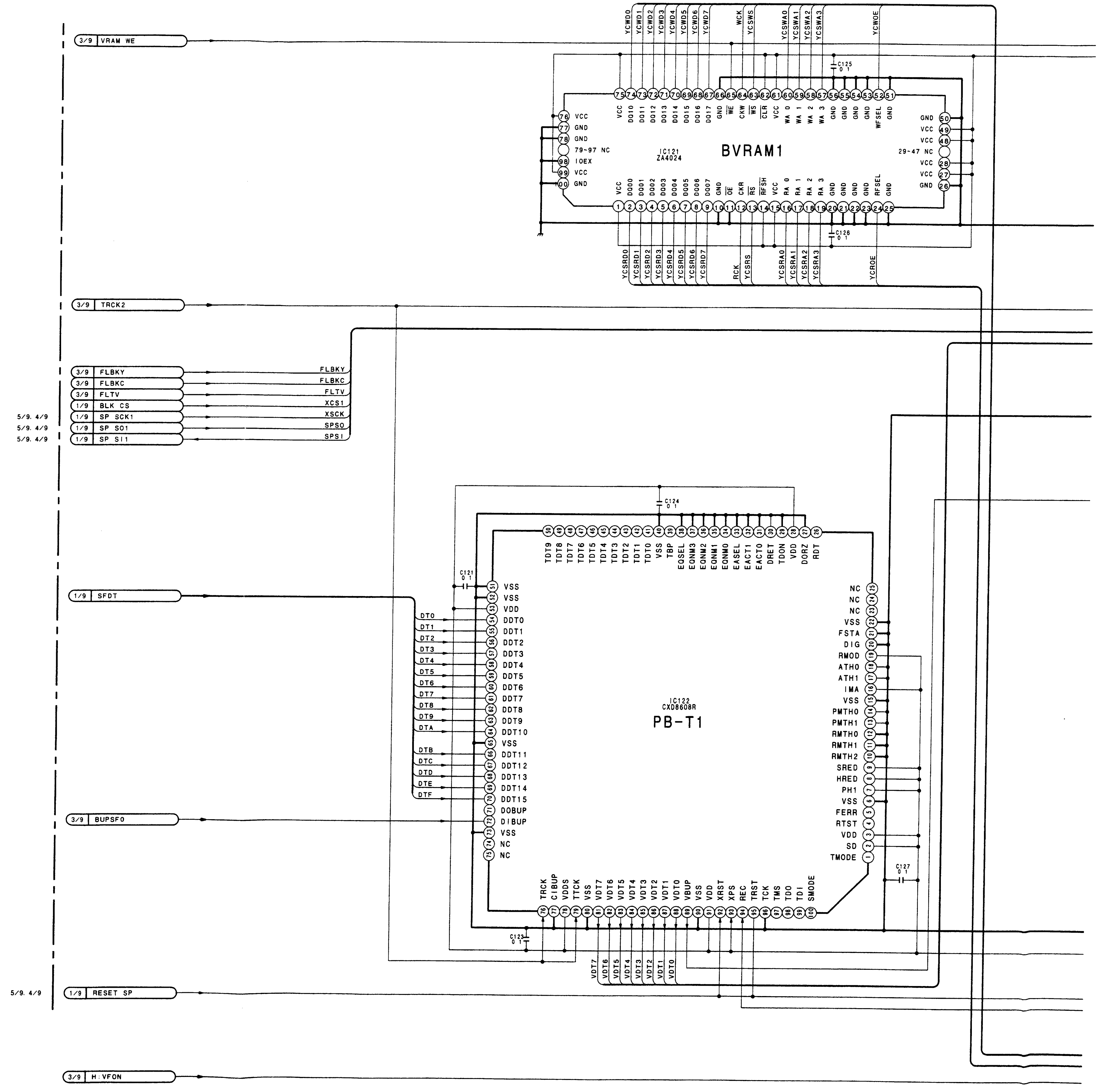

DSR-60/60P

A B C D E F G H

DSR-60/60P

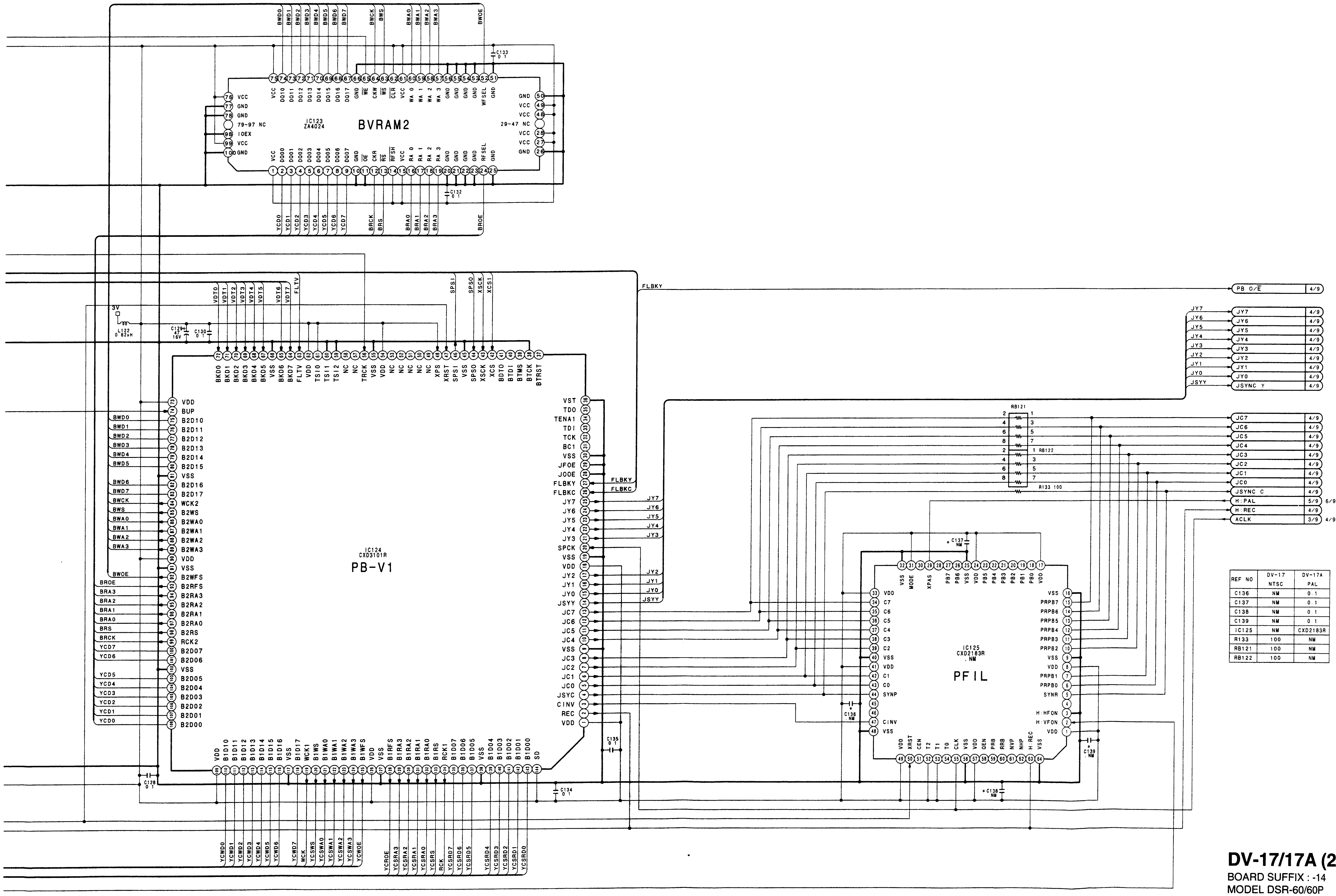

REF NO	DV-17 NTSC	DV-17A PAL
C136	NM	0.1
C137	NM	0.1
C138	NM	0.1
C139	NM	0.1
IC125	NM	CXD2183R
R133	100	NM
RB121	100	NM
RB122	100	NM

DV-17/17A (2/9)

BOARD SUFFIX : -14
MODEL DSR-60/60P

DSR-60/60P

**DV-17/17A (3/9): VIDEO/AUDIO DIGITAL PROCESS
AUDIO ANALOG PROCESS**

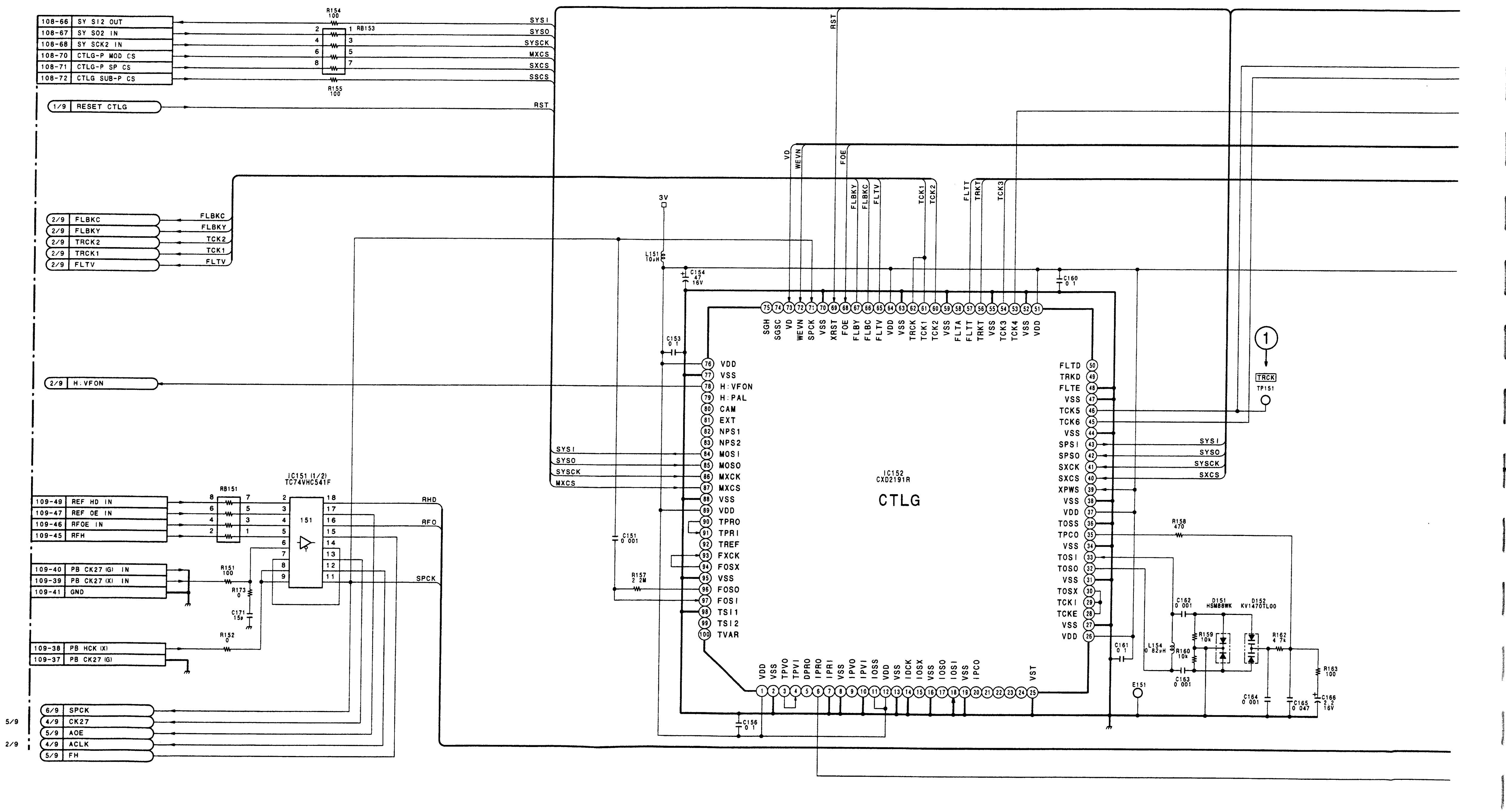

DSR-60/60P

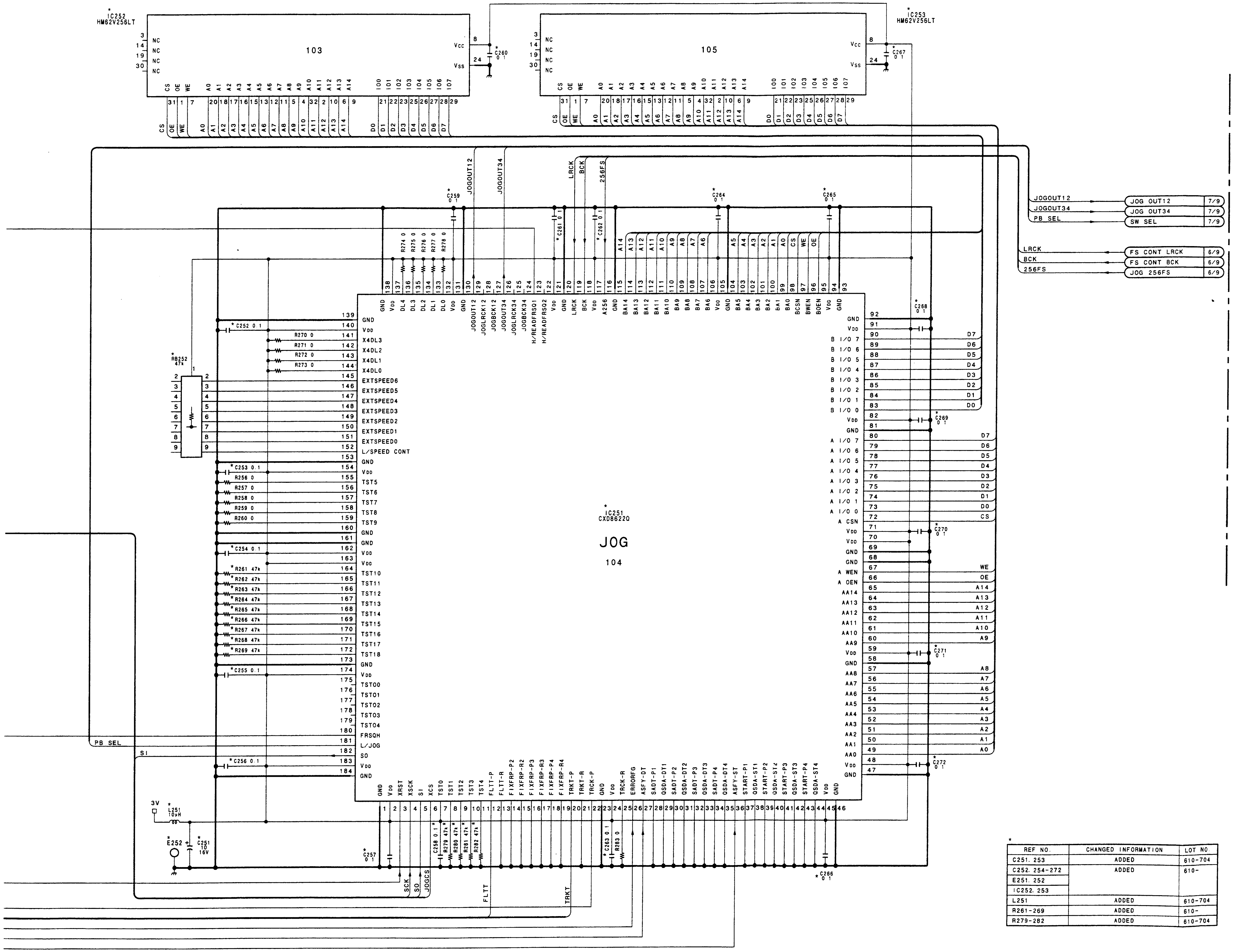

*

REF NO.	CHANGED INFORMATION	LOT NO.
C251. 253	ADDED	610-704
C252. 254-272	ADDED	610-
E251. 252		
IC252. 253		
L251	ADDED	610-704
R261-269	ADDED	610-
R279-282	ADDED	610-704

DV-17/17A (5/9)

BOARD SUFFIX : -11

MODEL DSR-60/60P

DSR-60/60P

DV-17/17A (6/9): VIDEO/AUDIO DIGITAL PROCESS AUDIO ANALOG PROCESS

① TP301 MODE: 75% Color Bar/PB (NTSC)
MODE: 100% Color Bar/PB (PAL)

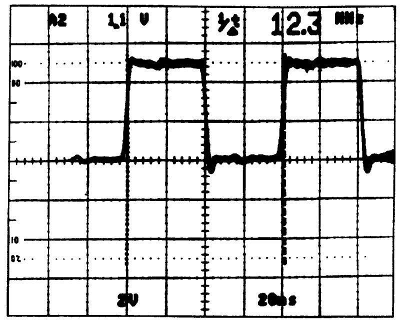

(fc = 48 KHz)

② TP302 MODE: 75% Color Bar/PB (NTSC)
MODE: 100% Color Bar/PB (PAL)

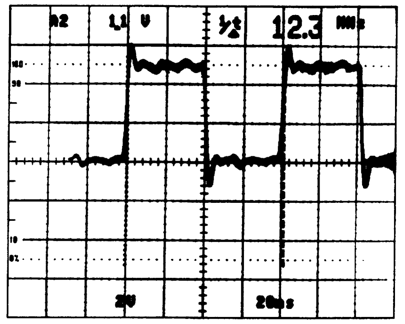

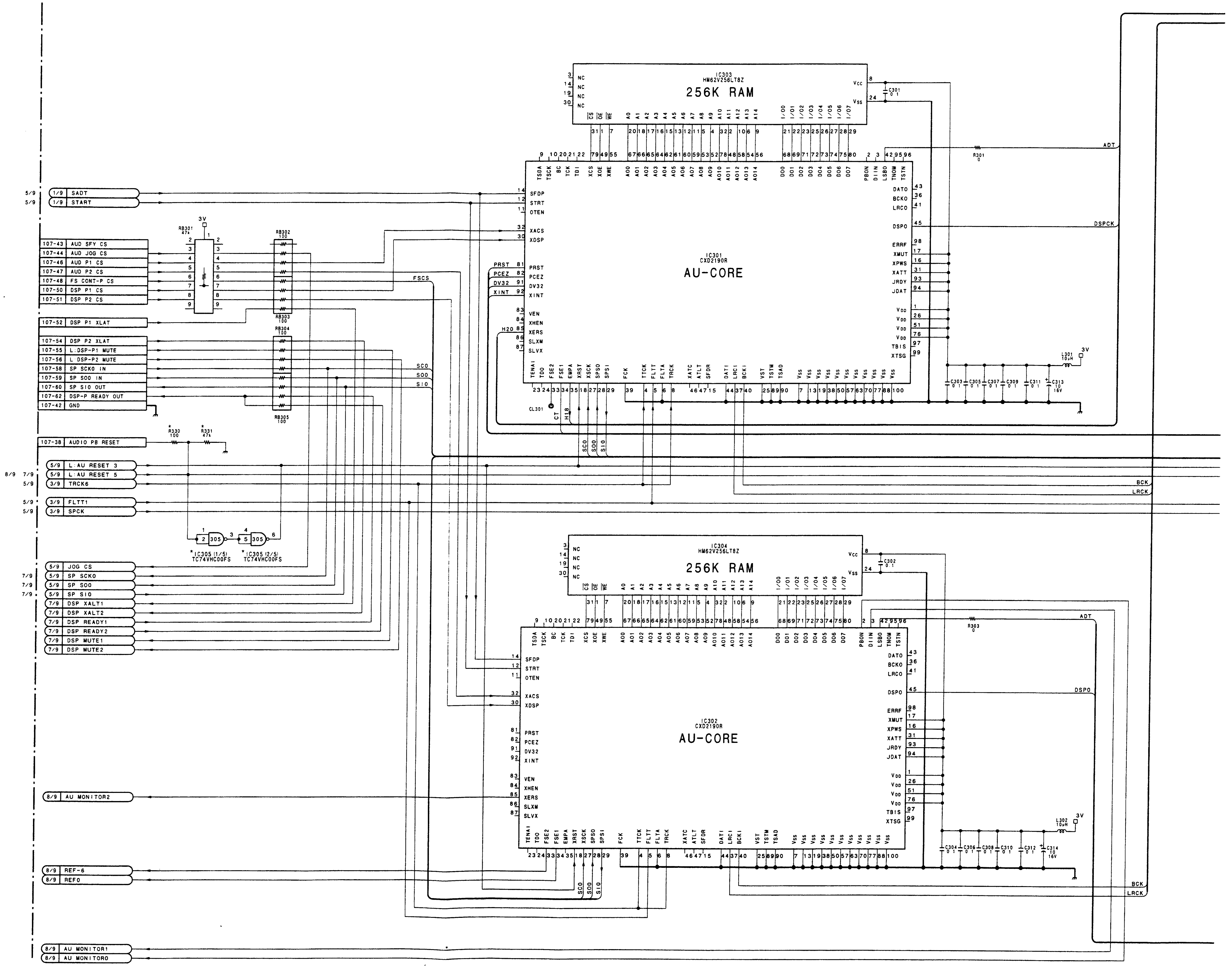

1
2
3
4
5

A B C D E F G H

SONY-SP0754 / DRUCK 282

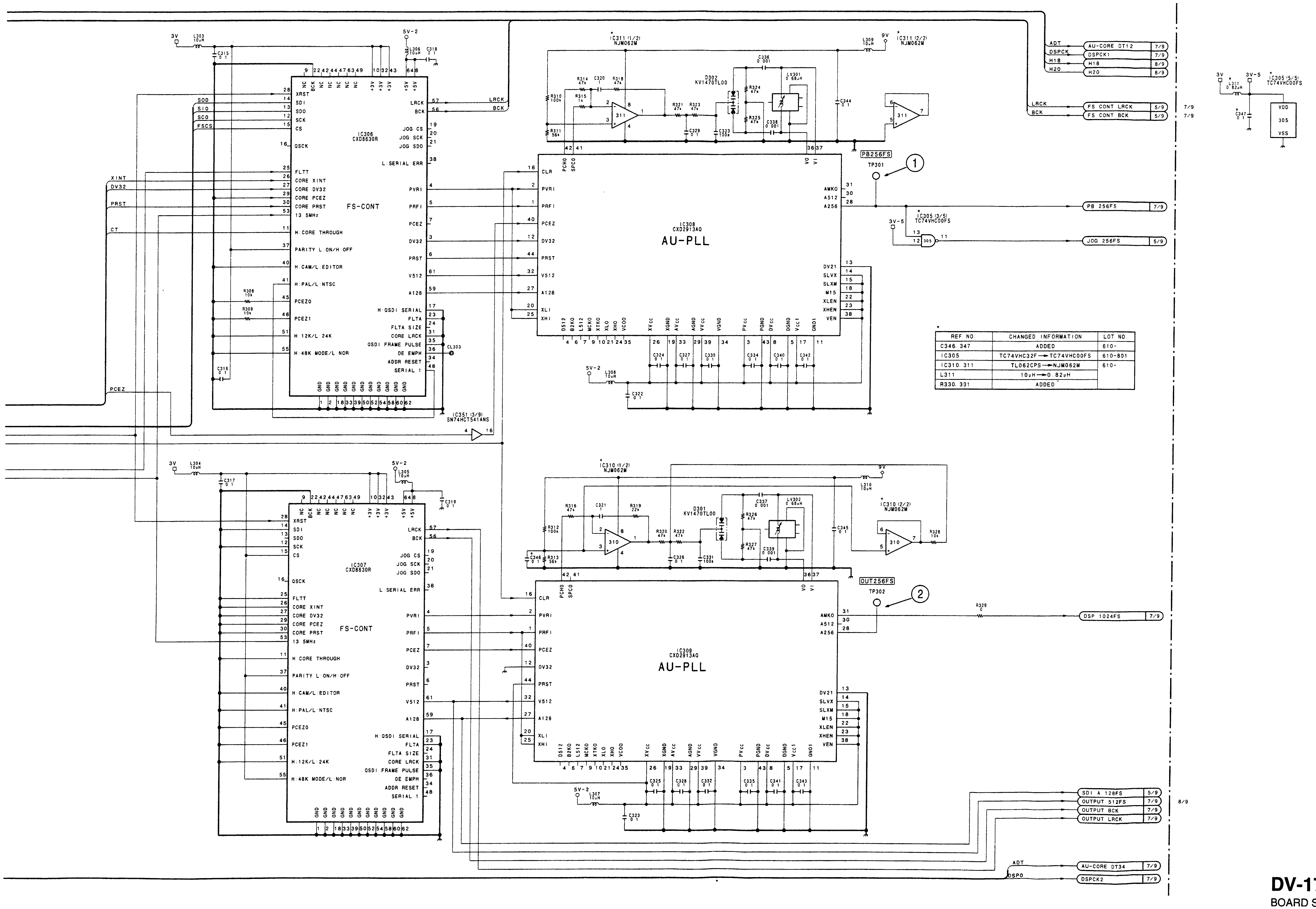

*

REF NO.	CHANGED INFORMATION	LOT NO.
C346. 347	ADDED	610-
IC305	TC74VHC32F → TC74VHC00FS	610-801
IC310. 311	TL062CPS → NJM062M	610-
L311	10μH → 0.82μH	
R330. 331	ADDED	

DV-17/17A (6/9)
BOARD SUFFIX : -11
MODEL DSR-60/60P

DSR-60/60P

DV-17/17A (7/9): VIDEO/AUDIO DIGITAL PROCESS
AUDIO ANALOG PROCESS

① TP351 MODE: 75% Color Bar/PB (NTSC)
MODE: 100% Color Bar/PB (PAL)

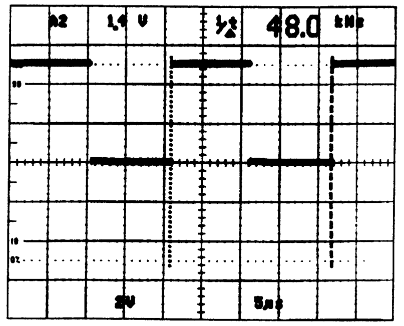

(fc = 48 KHz)

② TP352 MODE: 75% Color Bar/PB (NTSC)
MODE: 100% Color Bar/PB (PAL)

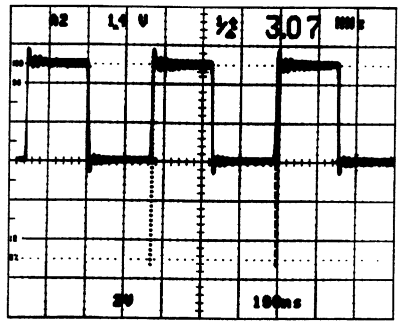

(fc = 48 KHz)

③ TP353 MODE: 75% Color Bar/PB (NTSC)
MODE: 100% Color Bar/PB (PAL)

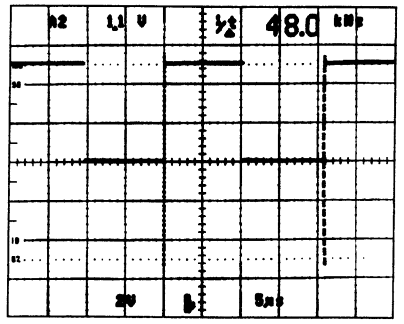

④ TP354 MODE: 75% Color Bar/PB (NTSC)
MODE: 100% Color Bar/PB (PAL)

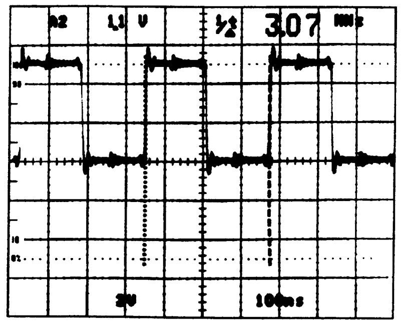

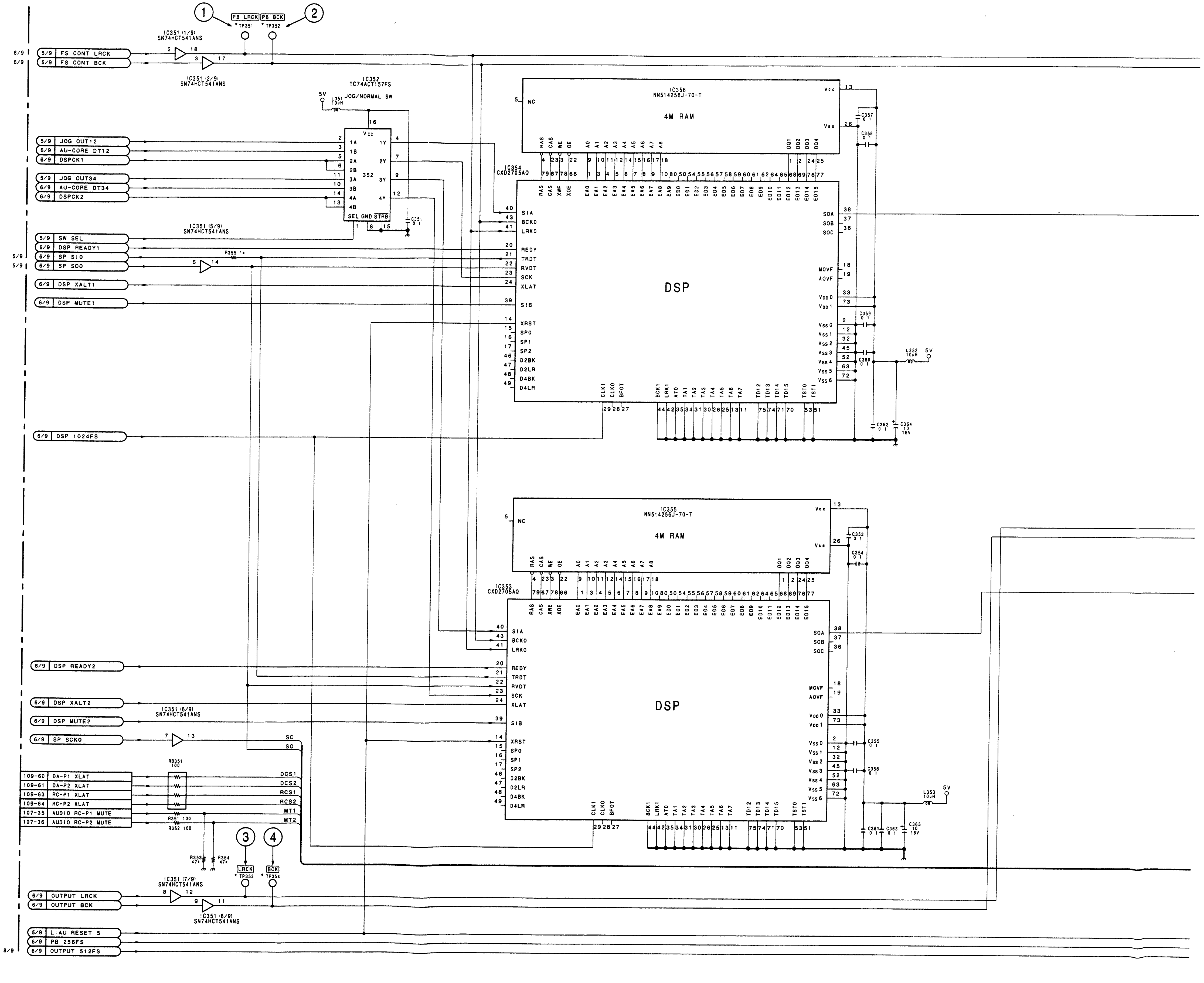

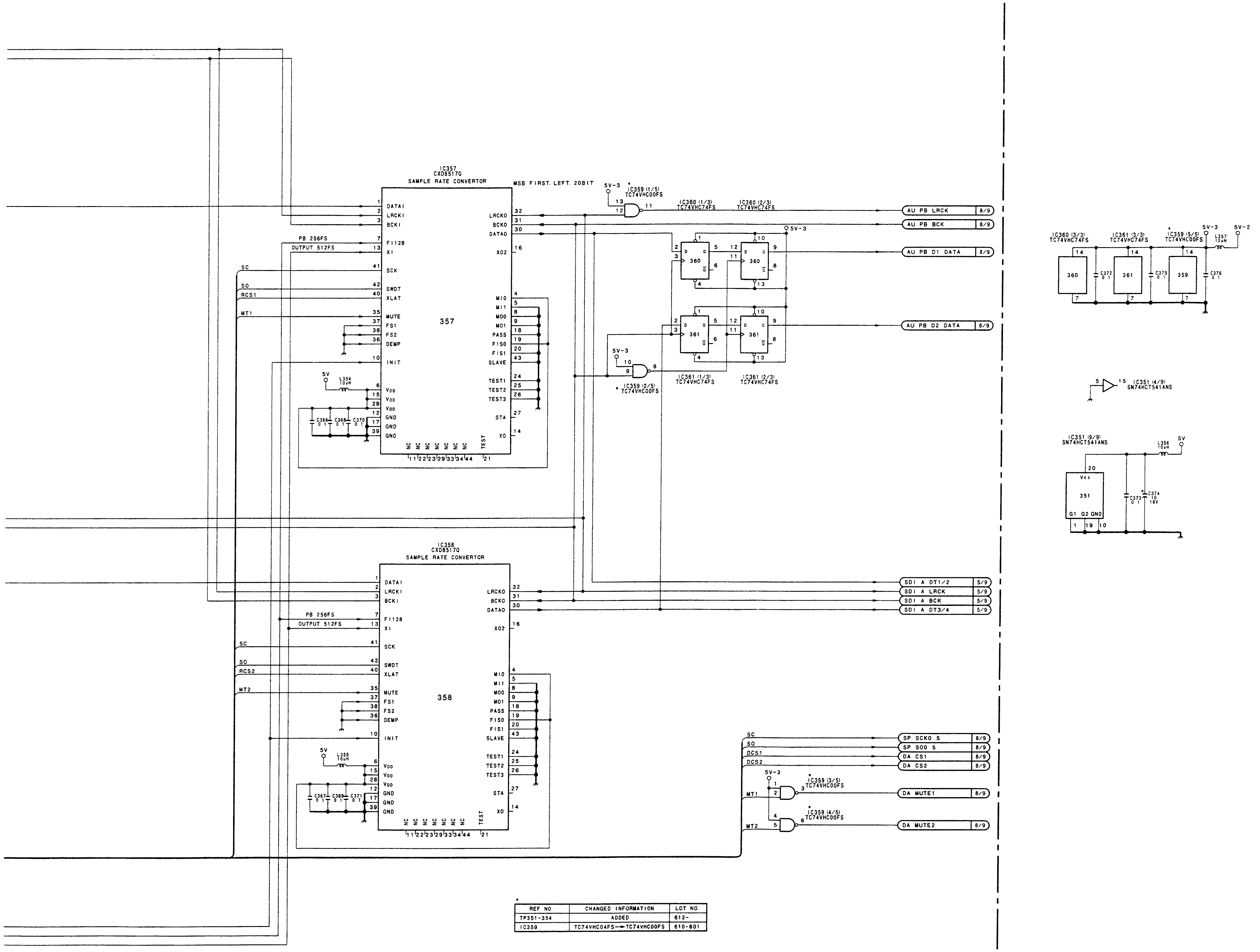

*

REF NO.	CHANGED INFORMATION	LOT NO.
TP351-354	ADDED	612-
IC359	TC74VHC04FS → TC74VHC00FS	610-801

DV-17/17A (7/9)
BOARD SUFFIX : -11
MODEL DSR-60/60P

DSR-60/60P

DV-17/17A (8/9): VIDEO/AUDIO DIGITAL PROCESS AUDIO ANALOG PROCESS

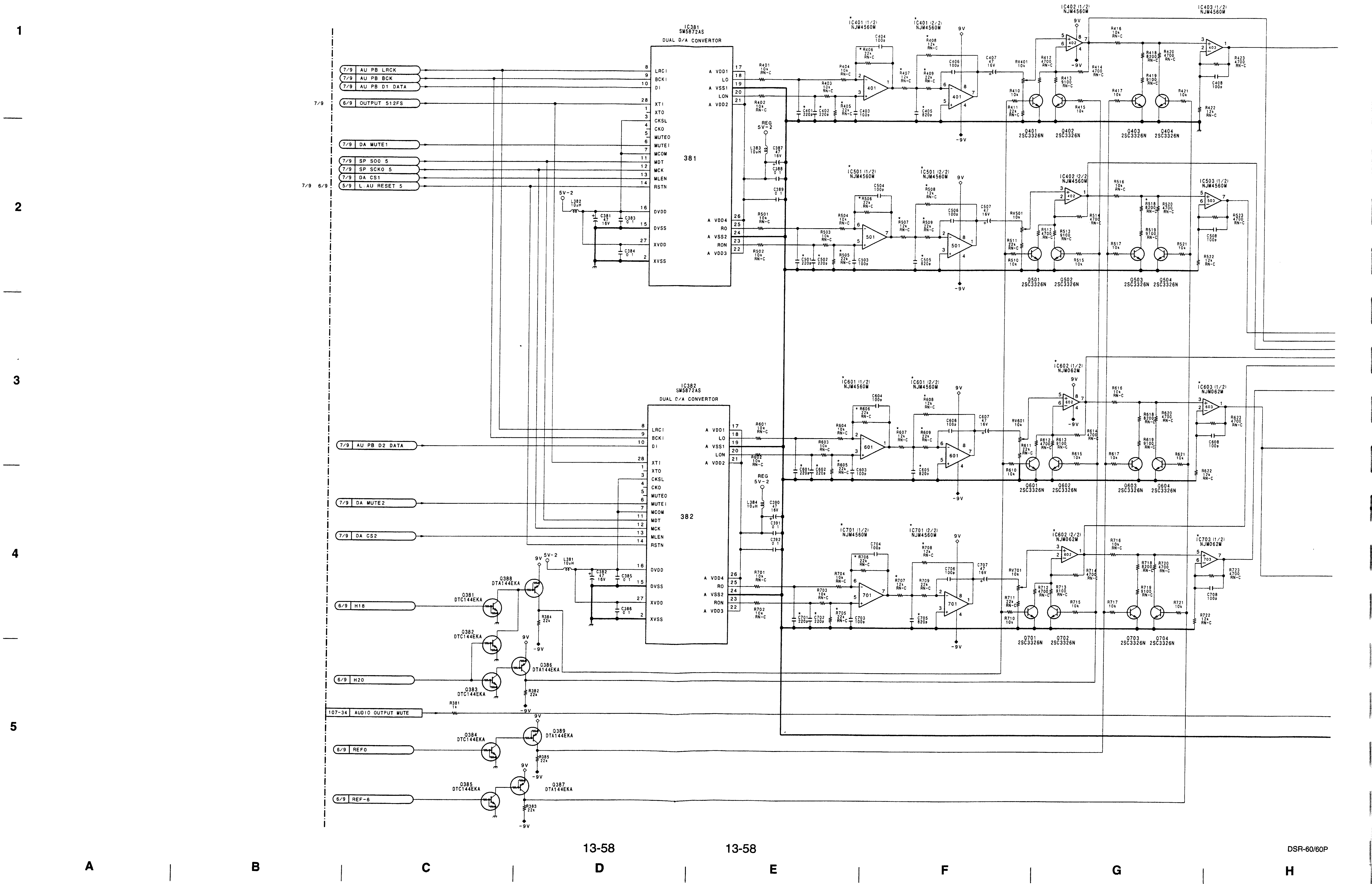

 DV-17/17A (8/9)

 DSR-60/60P

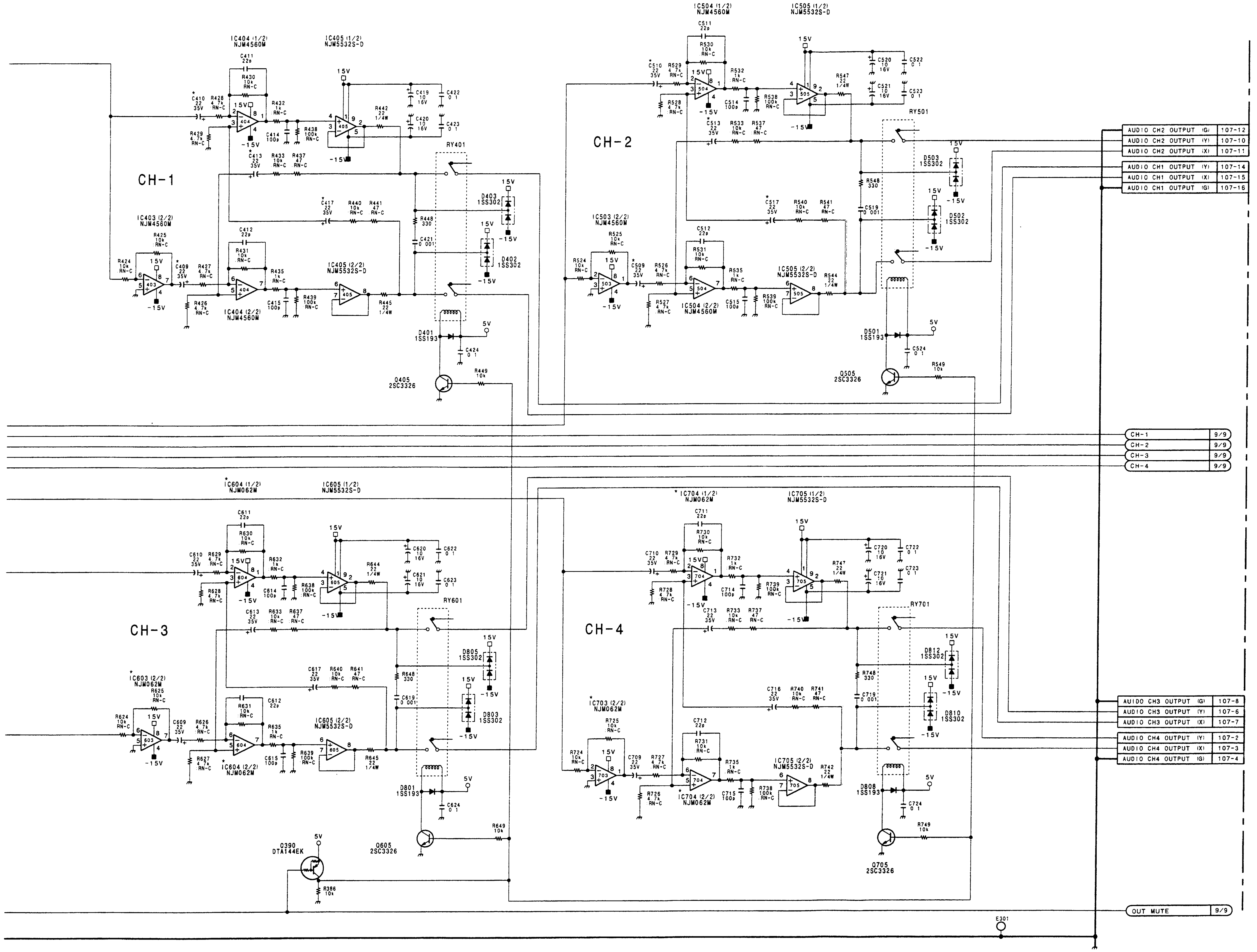

*

REF NO.	CHANGED INFORMATION	LOT NO
C401 402. 501 502	ADDED	610-
C405 505. 605. 705	3900p → 820p	
C409. 410. 413 417 509. 510. 513. 517	22 → 22 35V	
C601. 602 701. 702	ADDED	
IC401 501 601 701	NJM5532M → NJM4560M	
IC602-604. 703. 704	NJM4560M → NJM062M	
R405 406. 505 506	24 → 22	
R407. 408 507 508	2 7k → 12k	
R409. 509. 609	3.3k → 22k	
R518	9100 → 8200	
R605. 606 705. 706	24k → 22k	
R607. 608. 707. 708	2 7k → 12k	

1 2 3 4 5

DV-17/17A (8/9)
BOARD SUFFIX : -11
MODEL DSR-60/60P

 13-59

I J K L M N O P

SONY-SP0754 / DRUCK 288

DSR-60/60P

DV-17/17A (9/9): VIDEO/AUDIO DIGITAL PROCESS
AUDIO ANALOG PROCESS

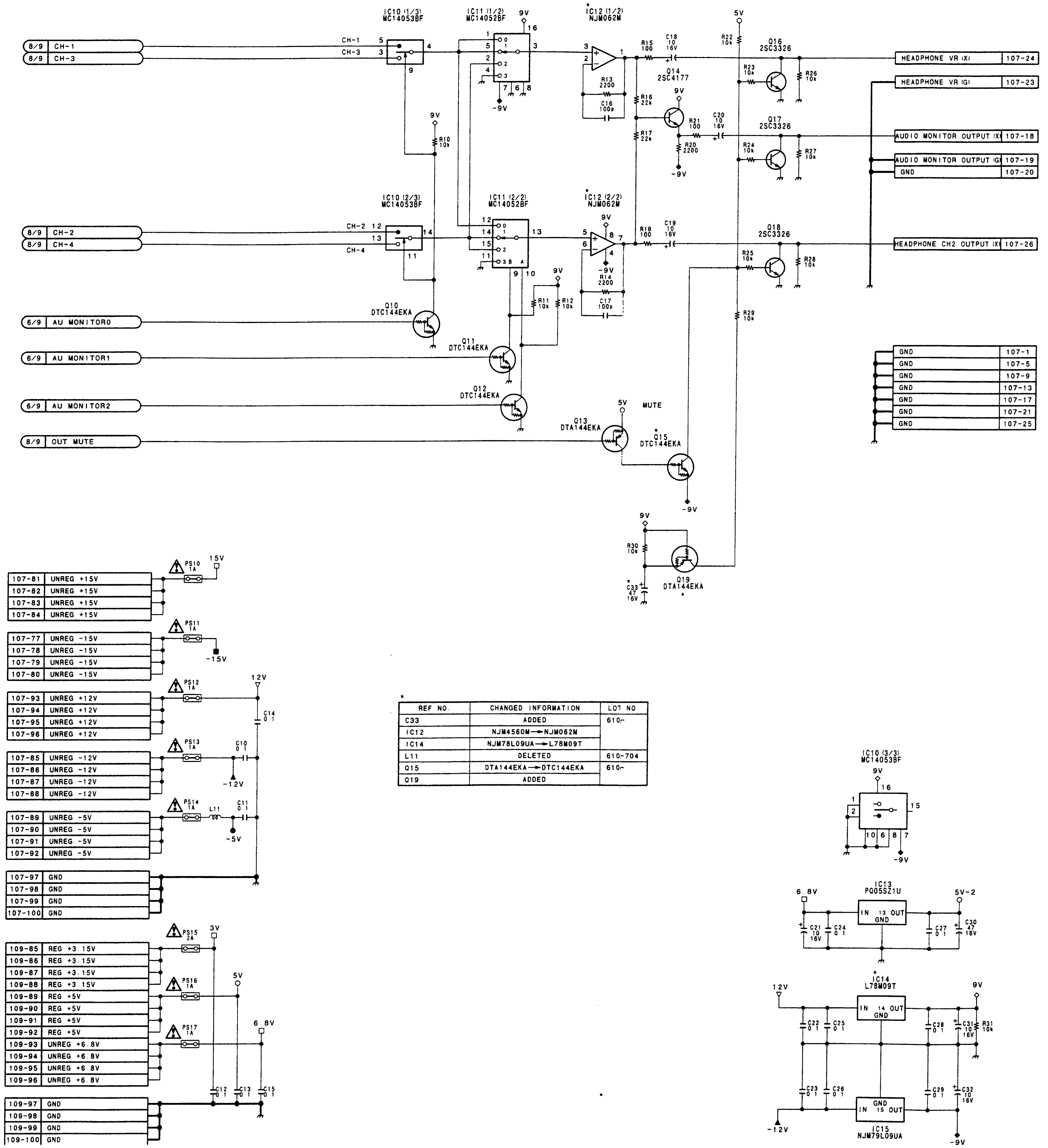

*

REF NO.	CHANGED INFORMATION	LOT NO.
C33	ADDED	610-
IC12	NJM4560M → NJM062M	
IC14	NJM78L09UA → L78M09T	
L11	DELETED	610-704
Q15	DTA144EKA → DTC144EKA	610-
Q19	ADDED	

DV-17/17A (9/9)
BOARD SUFFIX : -11
MODEL DSR-60/60P

 IO-149/149A/149B/149C

IO-149B/149C: VIDEO ANALOG OUT PROCESS (DSR-60/60P)
IO-149/149A: VIDEO ANALOG IN/OUT PROCESS (DSR-80/80P)

IO-149 (2/8)

① TP101 MODE: 75% Color Bar/EE • PB (NTSC)

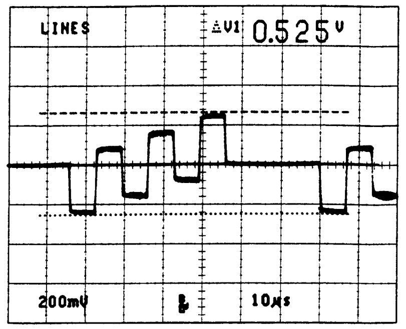

① TP101 MODE: 100% Color Bar/EE • PB (PAL)

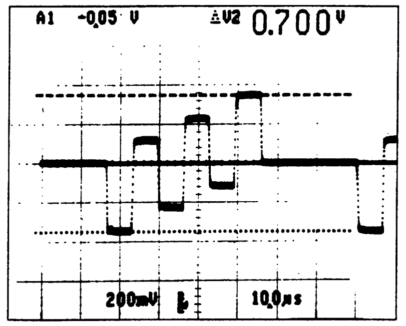

② TP102 MODE: 75% Color Bar/EE • PB (NTSC)

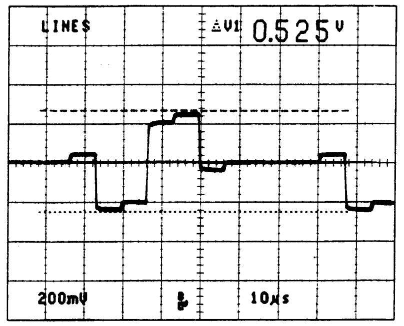

② TP102 MODE: 100% Color Bar/EE • PB (PAL)

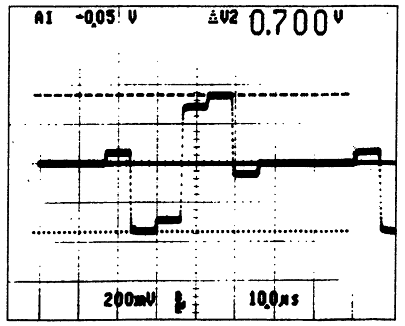

③ TP103 MODE: 75% Color Bar/EE • PB (NTSC)

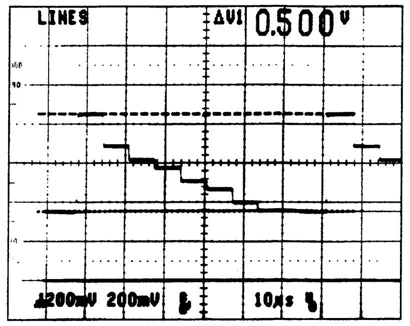

③ TP103 MODE: 100% Color Bar/EE • PB (PAL)

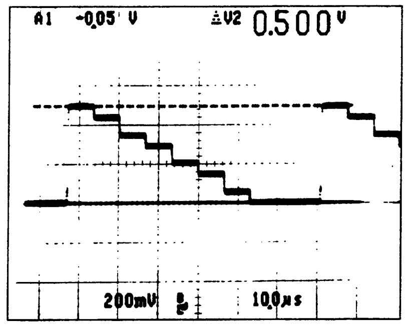

IO-149 (3/8)

① TP301 MODE: 75% Color Bar/EE • PB (NTSC)

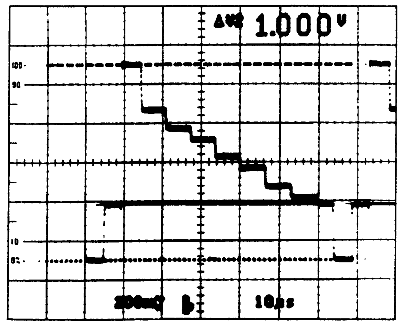

① TP301 MODE: 100% Color Bar/EE • PB (PAL)

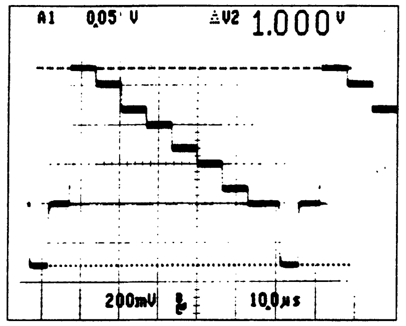

② TP302 MODE: 75% Color Bar/EE • PB (NTSC)

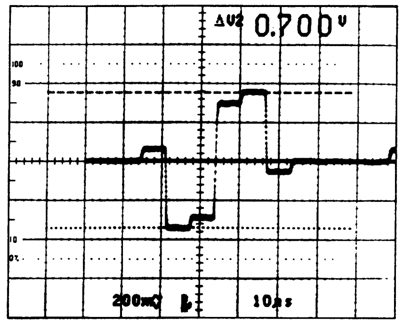

② TP302 MODE: 100% Color Bar/EE • PB (PAL)

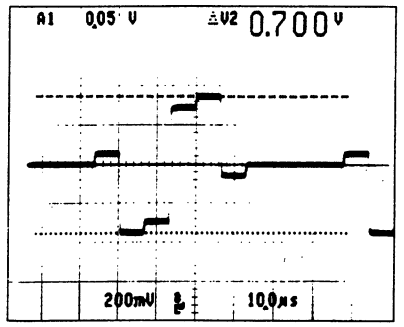

② TP302 MODE: 75% Color Bar/EE • PB (NTSC)

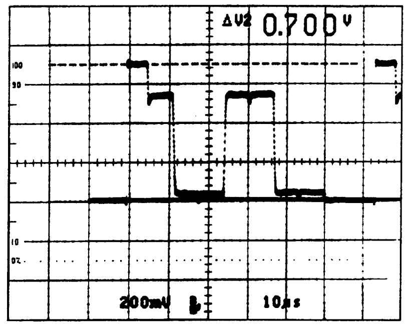

RGB (3 wire)

② TP302 MODE: 100% Color Bar/EE • PB (PAL)

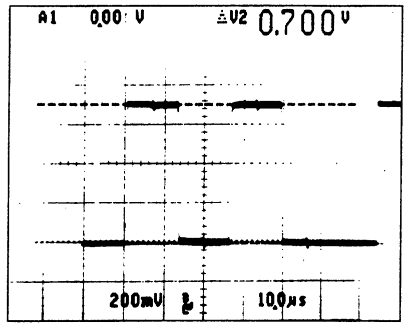

RGB (3 wire)

③ TP303 MODE: 75% Color Bar/EE • PB (NTSC)

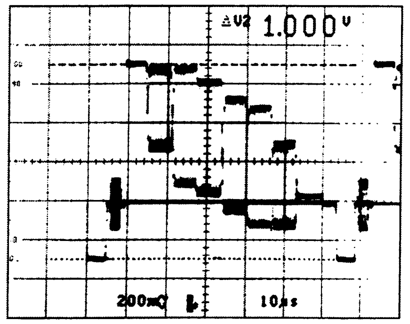

③ TP303 MODE: 100% Color Bar/EE • PB (PAL)

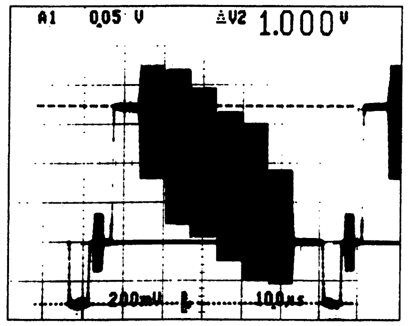

 13-62 (a)

 IO-149/149A/149B/149C

④ TP304 MODE: 75% Color Bar/EE • PB (NTSC)

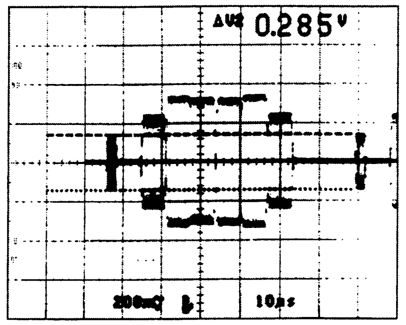

⑤ TP305 MODE: 75% Color Bar/EE • PB (NTSC)

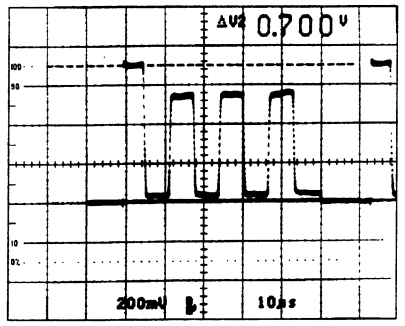

RGB (3 wire)

⑥ TP306 MODE: 75% Color Bar/EE • PB (NTSC)

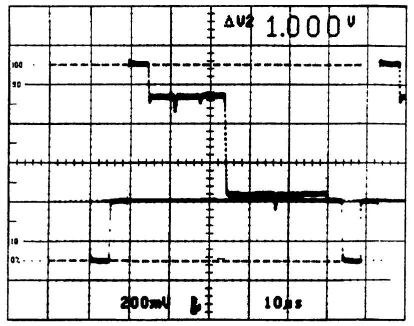

RGB (3 wire)

④ TP304 MODE: 100% Color Bar/EE • PB (PAL)

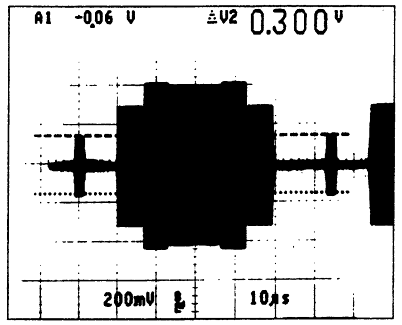

⑤ TP305 MODE: 100% Color Bar/EE • PB (PAL)

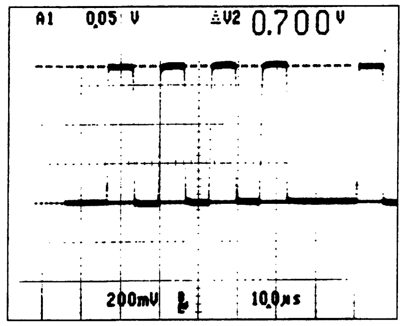

RGB (3 wire)

⑥ TP306 MODE: 100% Color Bar/EE • PB (PAL)

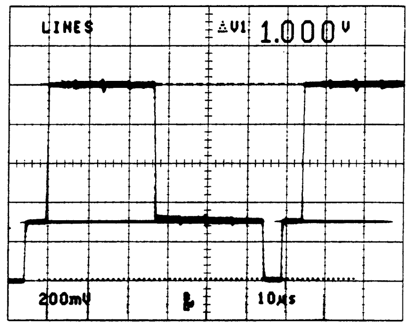

RGB (3 wire)

⑤ TP305 MODE: 75% Color Bar/EE • PB (NTSC)

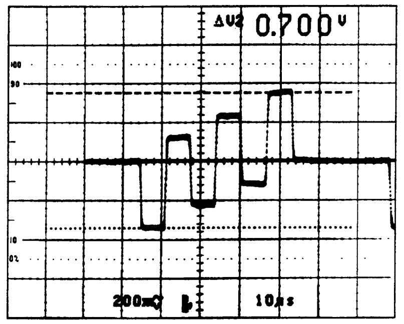

⑥ TP306 MODE: 75% Color Bar/EE • PB (NTSC)

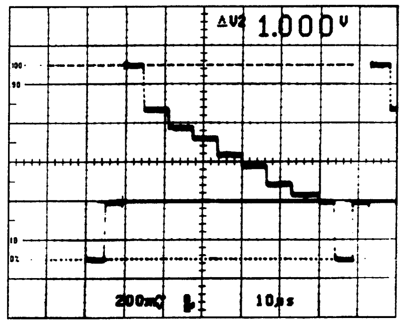

⑦ TP307 MODE: 75% Color Bar/EE • PB (NTSC)

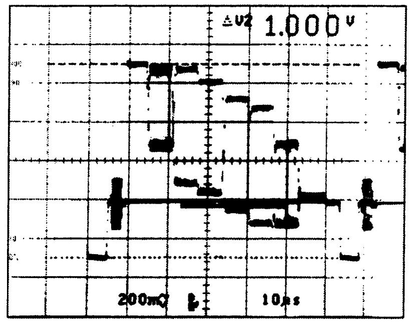

(Chara On)

⑤ TP305 MODE: 100% Color Bar/EE • PB (PAL)

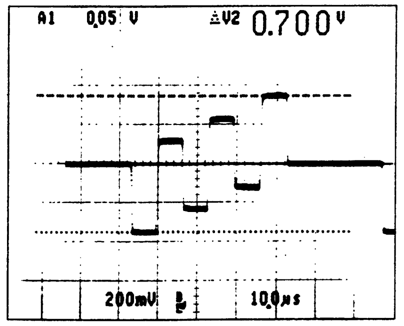

⑥ TP306 MODE: 100% Color Bar/EE • PB (PAL)

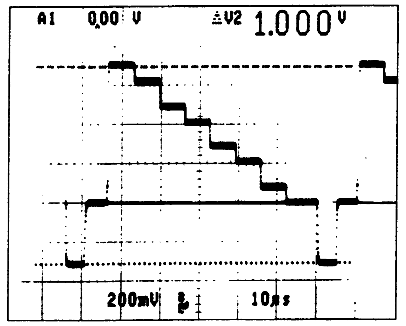

⑦ TP307 MODE: 100% Color Bar/EE • PB (PAL)

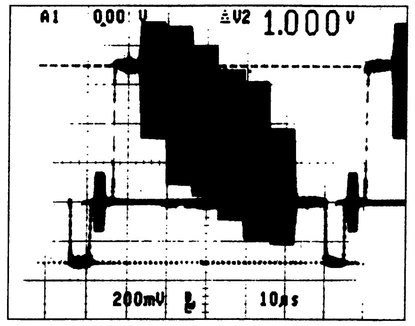

(Chara On)

IO-149/149A/149B/149C

MODEL DSR-80/80P/60/60P

ꞁNY-SP0754 / DRUCK 291

 IO-149/149A/149B/149C (1/8)

IO-149B/149C (1/8): VIDEO ANALOG OUT PROCESS (DSR-60/60P)
IO-149/149A (1/8): VIDEO ANALOG IN/OUT PROCESS (DSR-80/80P)

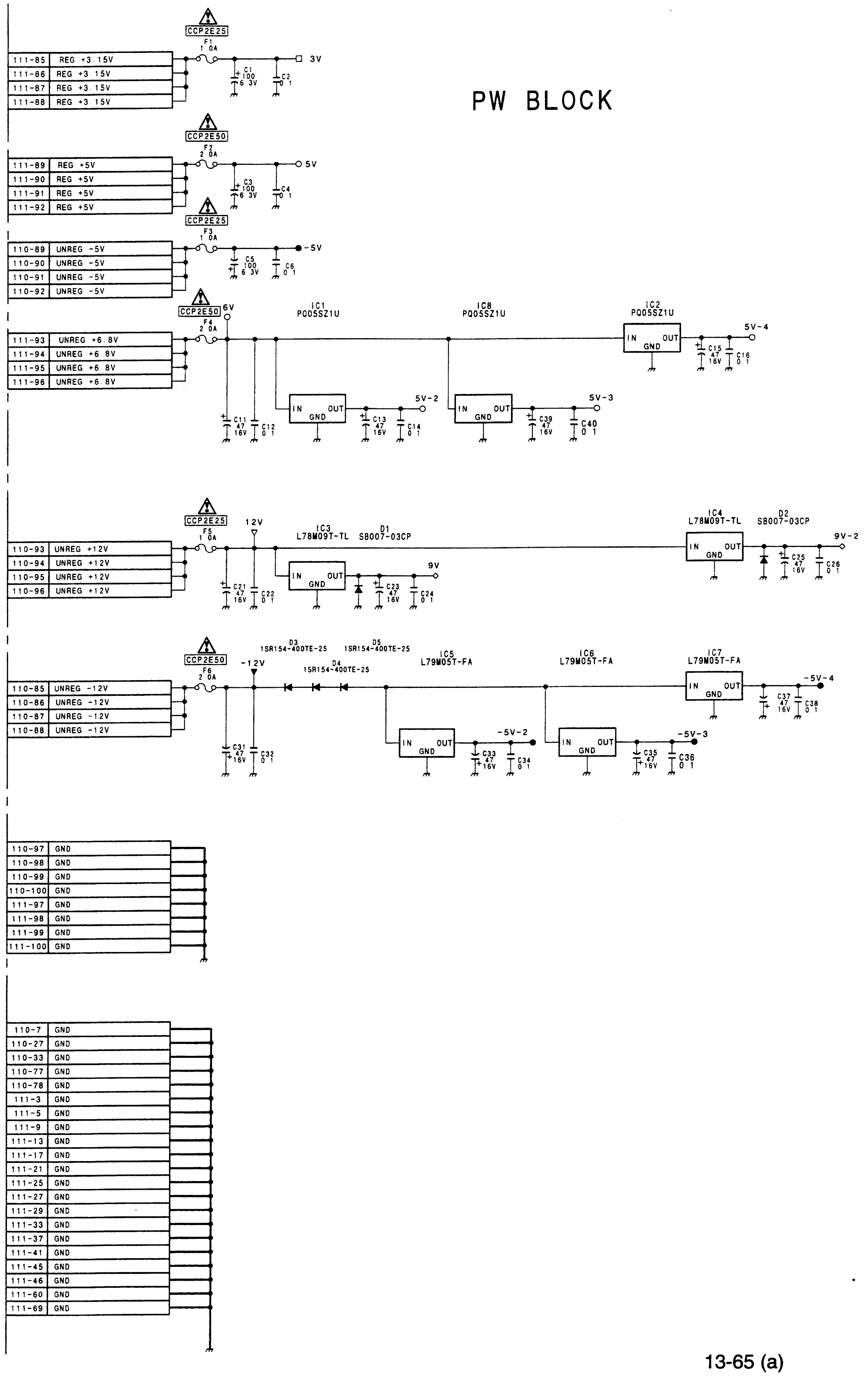

IO-149/149A/149B/149C (1/8)
BOARD SUFFIX : -14
MODEL DSR-80/80P/60/60P

IO-149B/149C (2/8): VIDEO ANALOG OUT PROCESS (DSR-60/60P)
IO-149/149A (2/8): VIDEO ANALOG IN/OUT PROCESS (DSR-80/80P)

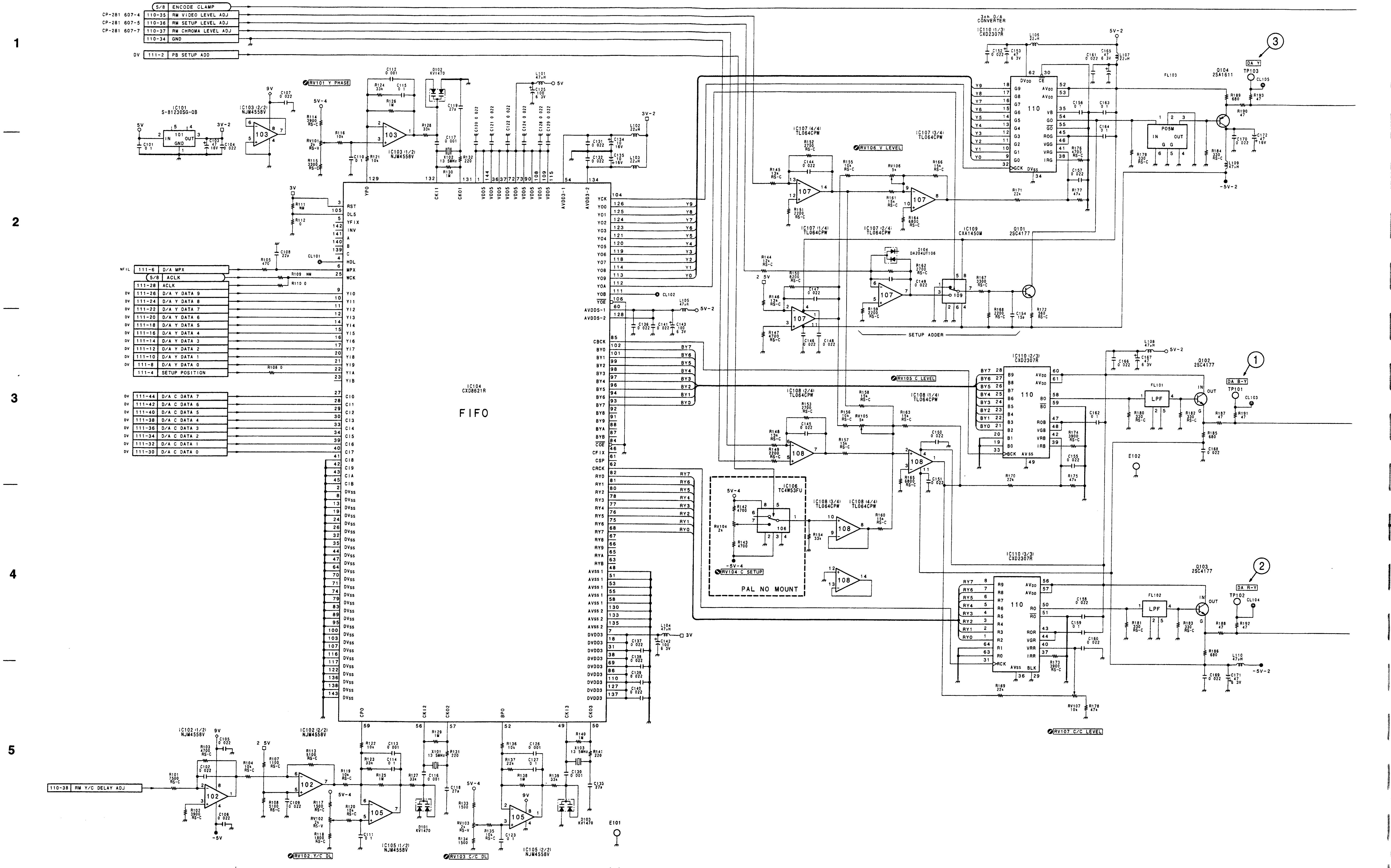

A | B | C | D | E | F | G | H

IO-149/149A/149B/149C (2/8)

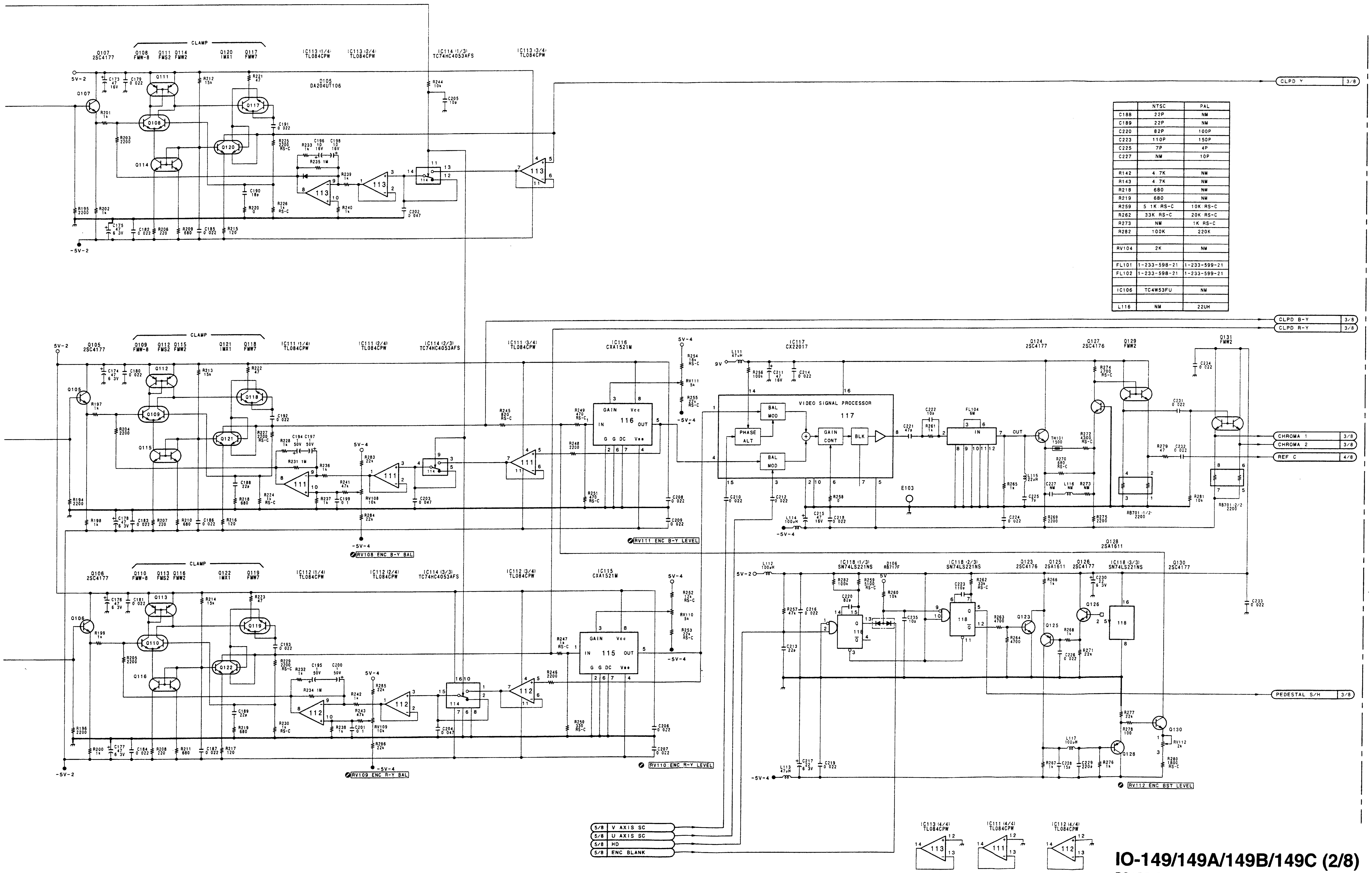

	NTSC	PAL
C188	22P	NM
C189	22P	NM
C220	82P	100P
C223	110P	150P
C225	7P	4P
C227	NM	10P
R142	4.7K	NM
R143	4.7K	NM
R218	680	NM
R219	680	NM
R259	5.1K RS-C	10K RS-C
R262	33K RS-C	20K RS-C
R273	NM	1K RS-C
R282	100K	220K
RV104	2K	NM
FL101	1-233-598-21	1-233-599-21
FL102	1-233-598-21	1-233-599-21
IC106	TC4W53FU	NM
L116	NM	22UH

IO-149/149A/149B/149C (2/8)

BOARD SUFFIX : -14
MODEL DSR-80/80P/60/60P

IO-149/149A/149B/149C (3/8)

IO-149B/149C (3/8): VIDEO ANALOG OUT PROCESS (DSR-60/60P)
IO-149/149A (3/8): VIDEO ANALOG IN/OUT PROCESS (DSR-80/80P)

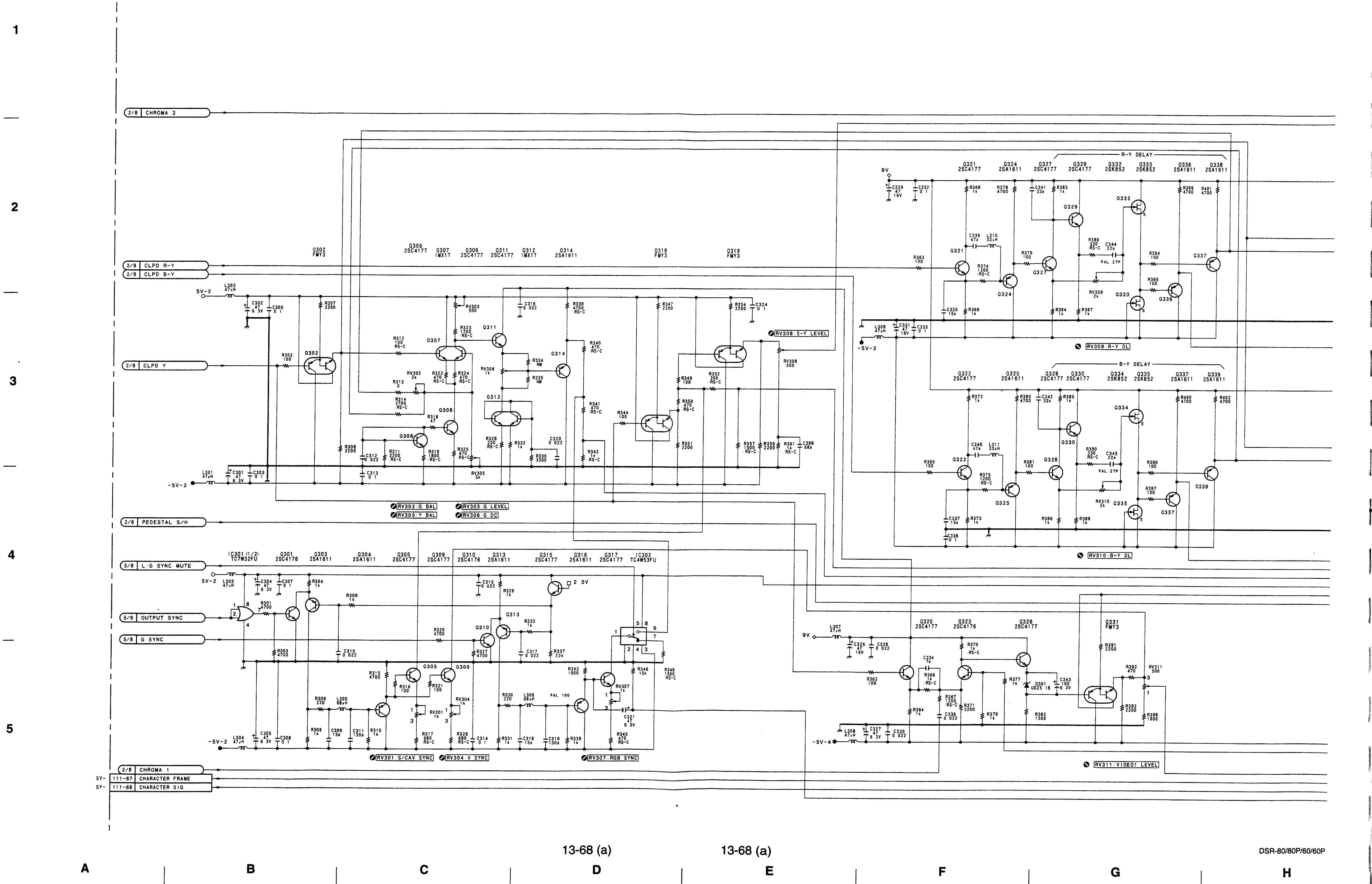

13-68 (a)

 IO-149/149A/149B/149C (3/8)

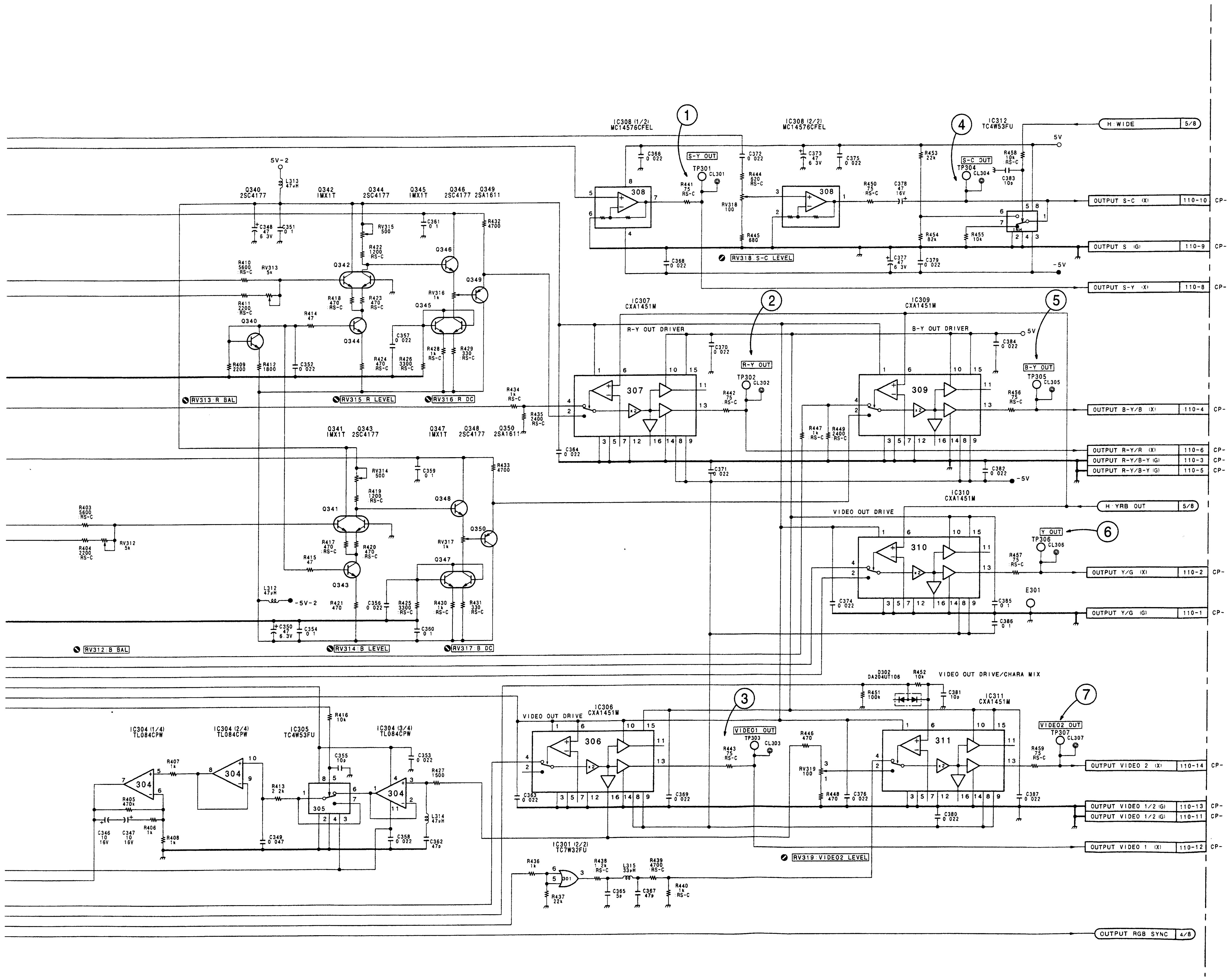

	NTSC	PAL
C311	130P	220P
C319	130P	220P
C334	7P	5P
C344	22P	27P
C345	22P	27P
C362	47P	27P
R434	1K:RS-C	1.6K:RS-C
R435	2.4K:RS-C	1.8K:RS-C
R447	1K:RS-C	1.6K:RS-C
R449	2.4K RS-C	1.8K:RS-C
L305	68UH	100UH
L306	68UH	100UH

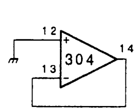

1 2 3 4 5

IO-149/149A/149B/149C (3/8)

BOARD SUFFIX : -14
MODEL DSR-80/80P/60/60P

IO-149/149A/149B/149C

IO-149B/149C: VIDEO ANALOG OUT PROCESS (DSR-60/60P)
IO-149/149A: VIDEO ANALOG IN/OUT PROCESS (DSR-80/80P)

IO-149 (4/8)

① TP501 MODE: 75% Color Bar/EE • PB (NTSC)

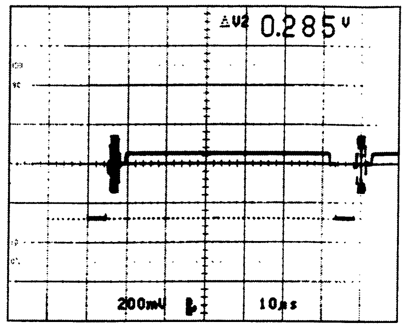

① TP501 MODE: 100% Color Bar/EE • PB (PAL)

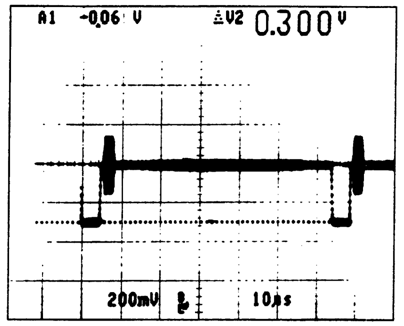

② TP502 MODE: 75% Color Bar/EE • PB (NTSC)

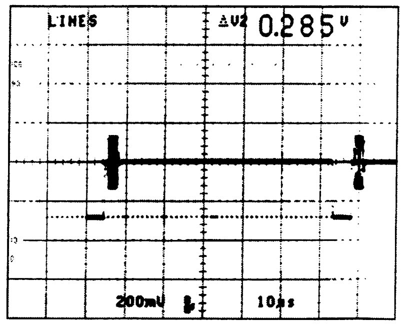

② TP502 MODE: 100% Color Bar/EE • PB (PAL)

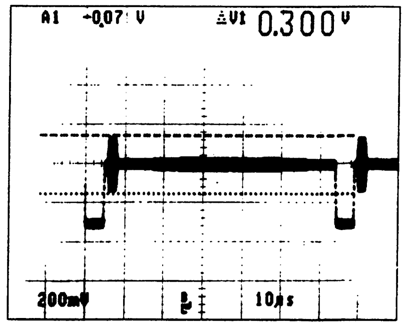

IO-149 (5/8)

① TP601 MODE: 75% Color Bar/EE • PB (NTSC)

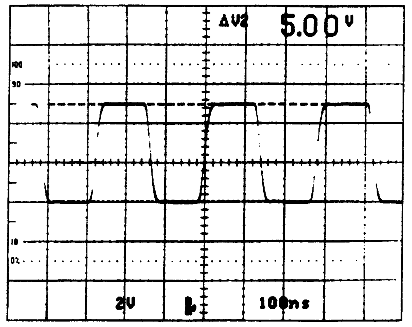

① TP601 MODE: 100% Color Bar/EE • PB (PAL)

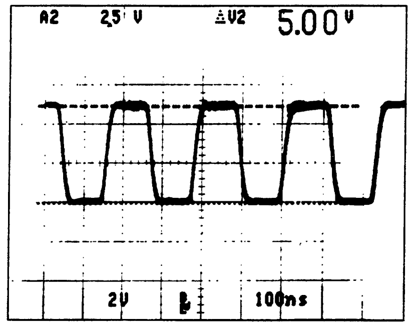

④ TP604 MODE: 75% Color Bar/EE • PB (NTSC)
① TP601 MODE: 75% Color Bar/EE • PB (NTSC)

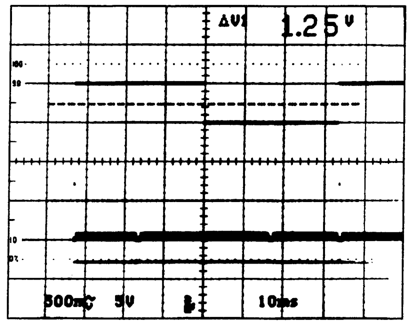

④ TP604 MODE: 100% Color Bar/EE • PB (PAL)
① TP601 MODE: 100% Color Bar/EE • PB (PAL)

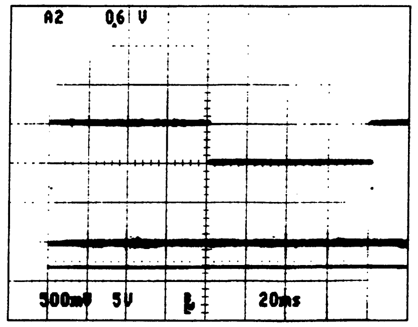

② TP602 MODE: 75% Color Bar/EE • PB (NTSC)

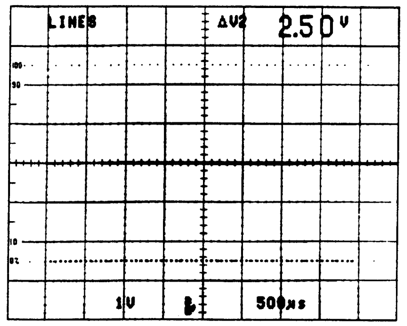

(DC 2.5V Adj)

② TP602 MODE: 100% Color Bar/EE • PB (PAL)

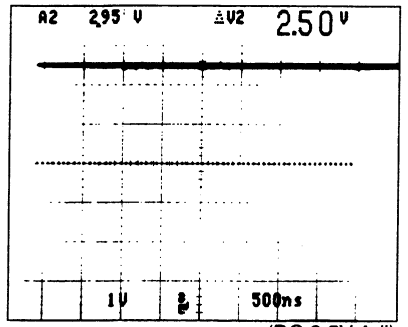

(DC 2.5V Adj)

③ TP603 MODE: 75% Color Bar/EE • PB (NTSC)

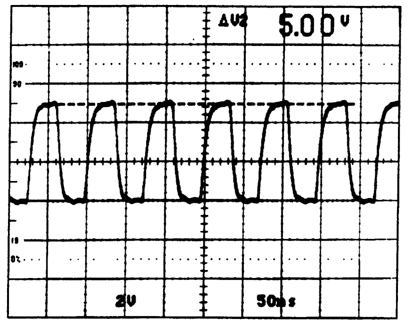

③ TP603 MODE: 100% Color Bar/EE • PB (PAL)

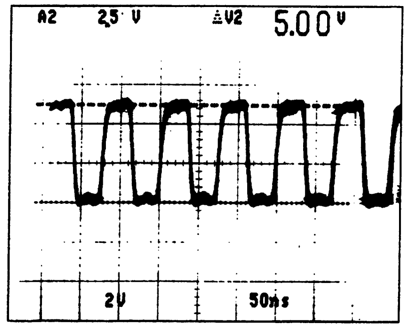

13-70 (a)

 IO-149/149A/149B/149C (4/8)

IO-149B/149C (4/8): VIDEO ANALOG OUT PROCESS (DSR-60/60P)
IO-149/149A (4/8): VIDEO ANALOG IN/OUT PROCESS (DSR-80/80P)

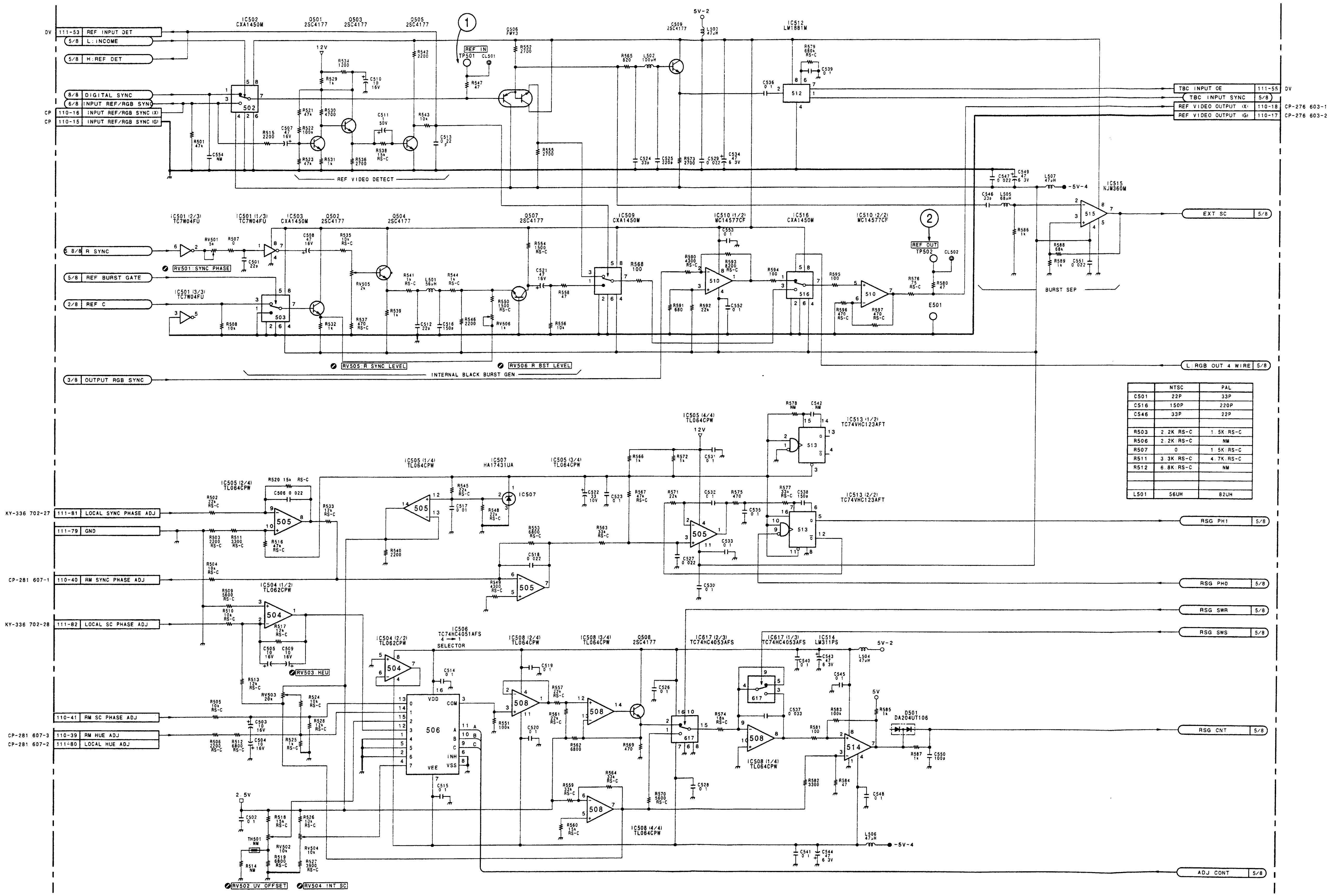

	NTSC	PAL
C501	22P	33P
C516	150P	220P
C546	33P	22P
R503	2.2K RS-C	1.5K:RS-C
R506	2.2K:RS-C	NM
R507	0	1.5K:RS-C
R511	3.3K RS-C	4.7K RS-C
R512	6.8K:RS-C	NM
L501	56UH	82UH

IO-149/149A/149B/149C (4/8)

BOARD SUFFIX : -14
MODEL DSR-80/80P/60/60P

IO-149/149A/149B/149C (5/8)

IO-149B/149C (5/8): VIDEO ANALOG OUT PROCESS (DSR-60/60P)
IO-149/149A (5/8): VIDEO ANALOG IN/OUT PROCESS (DSR-80/80P)

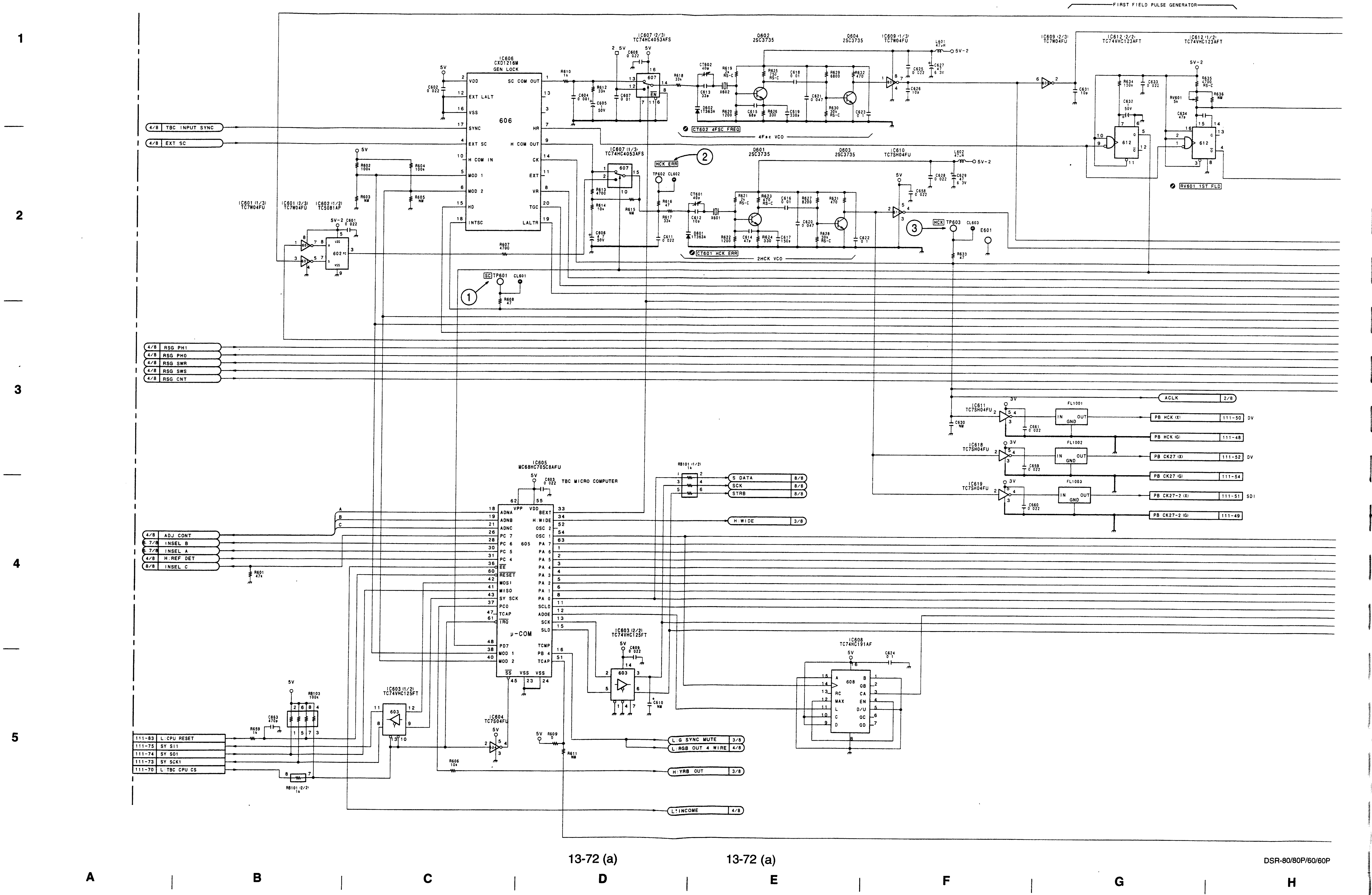

13-72 (a)

SONY-SP0754 / DRUCK 300

IO-149/149A/149B/149C (5/8)

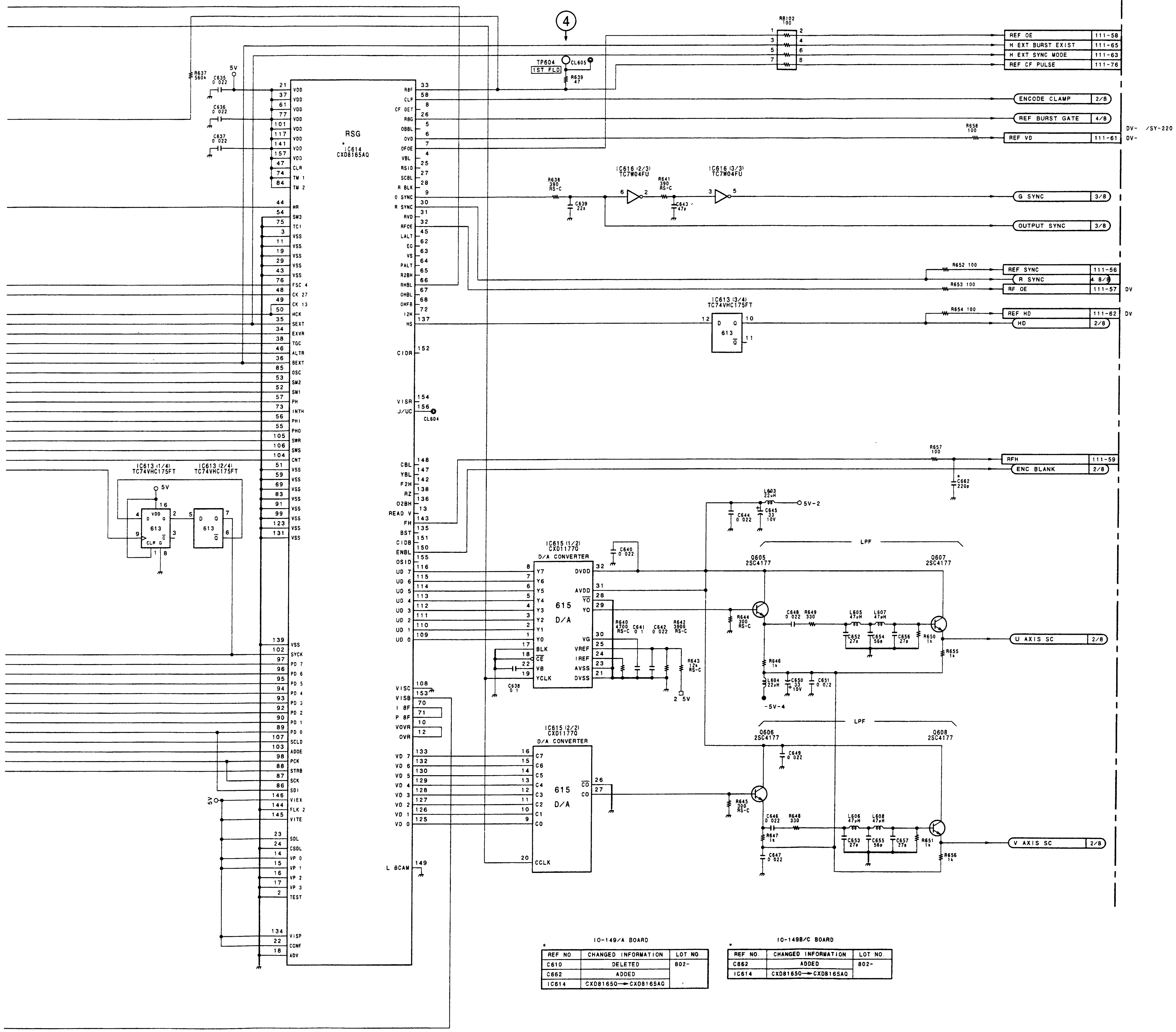

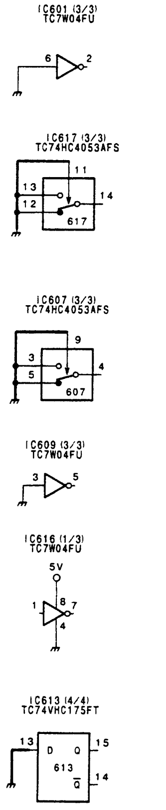

	NTSC	PAL
C611	0.022	0.1
C613	33P	27P
C639	22P	18P
C652	27P	33P
C653	27P	33P
C654	56P	68P
C655	56P	68P
C656	27P	33P
C657	27P	33P
R602	100K	NM
R603	NM	0
R604	100K	NM
R605	NM	0
R613	4.7K	NM
R615	NM	4.7K
R637	560K	680K:RS-C
R638	390:RS-C	2.2K:RS-C
R640	4.7K:RS-C	3.3K:RS-C
R641	390:RS-C	910:RS-C
R644	300:RS-C	220:RS-C
R645	300:RS-C	220:RS-C
L605	47UH	27UH
L606	47UH	27UH
L607	47UH	27UH
L608	47UH	27UH
X602	1-527-722-91	1-760-457-91

IO-149/A BOARD

*

REF NO.	CHANGED INFORMATION	LOT NO.
C610	DELETED	802-
C662	ADDED	
IC614	CXD81650→CXD8165AQ	

IO-149B/C BOARD

*

REF NO.	CHANGED INFORMATION	LOT NO.
C662	ADDED	802-
IC614	CXD81650→CXD8165AQ	

IO-149/149A/149B/149C (5/8)

BOARD SUFFIX : -14
MODEL DSR-80/80P/60/60P

13-73 (a)

I | J | K | L | M | N | O | P

1 2 3 4 5

)NY-SP0754 / DRUCK 301

IO-149/149A (6/8): VIDEO ANALOG IN/OUT PROCESS (DSR-80/80P)

DSR-80/80P

DSR-80/80P

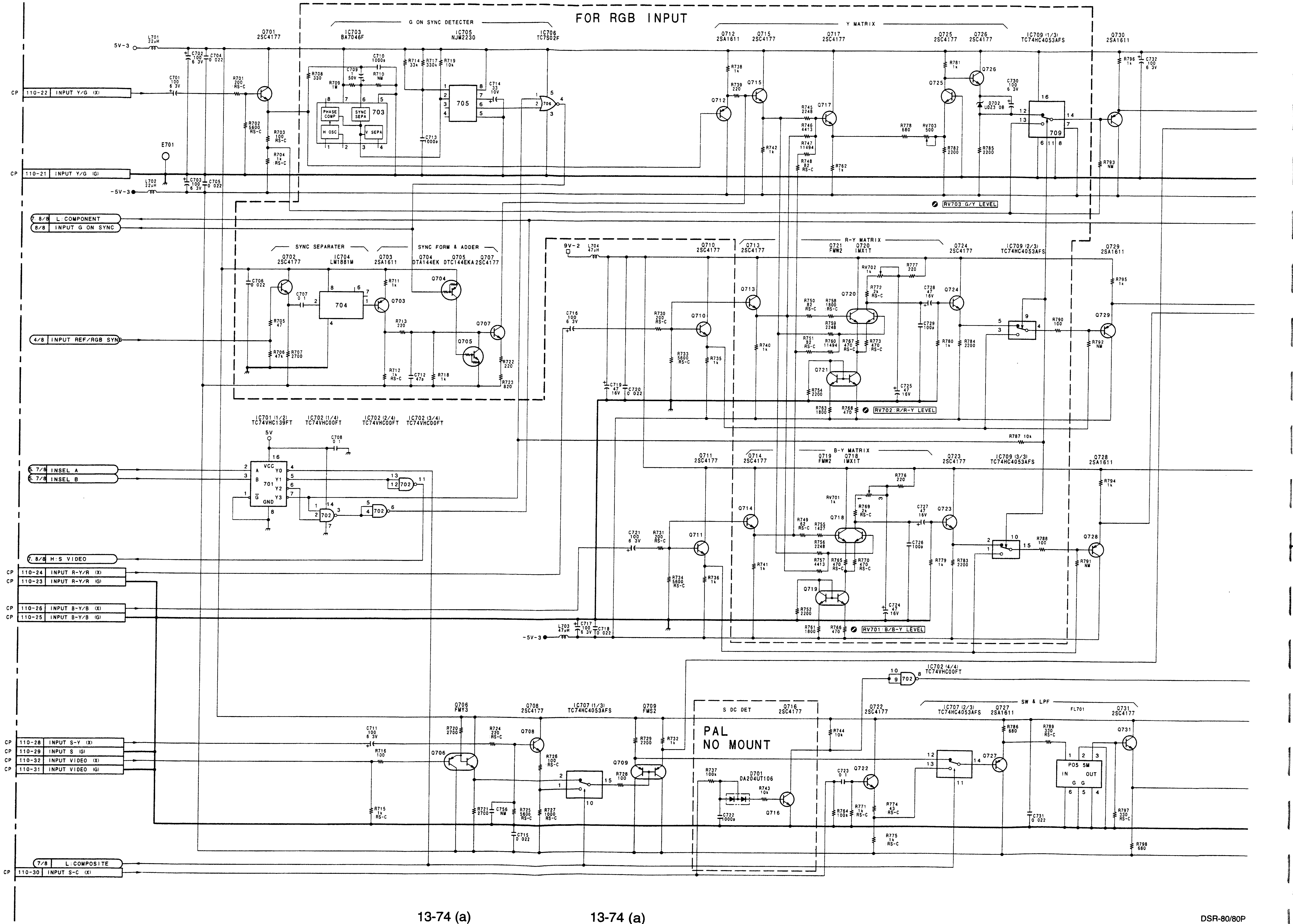

A B C D E F G H

SONY-SP0754 / DRUCK 302

DSR-80/80P

DSR-80/80P

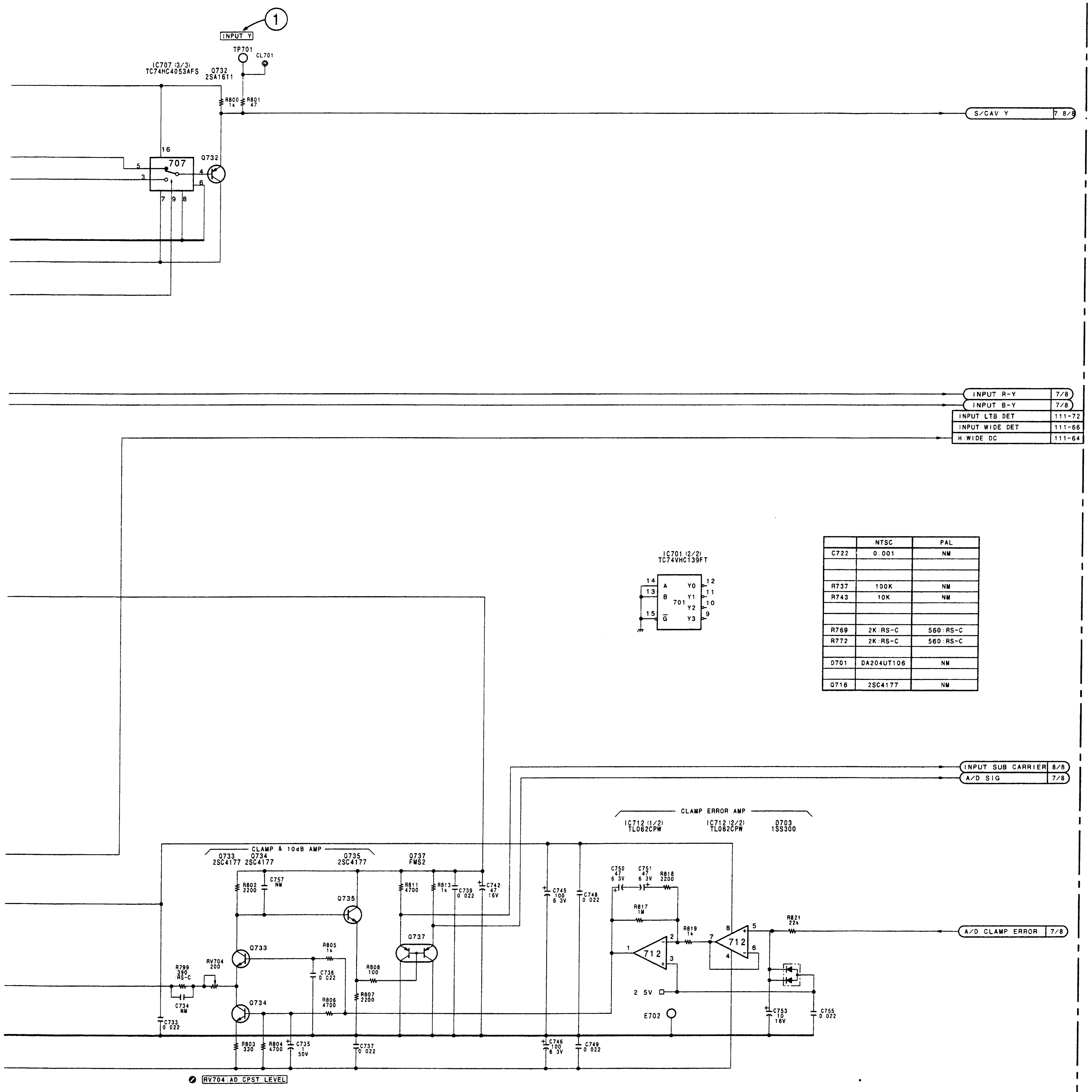

	NTSC	PAL
C722	0.001	NM
R737	100K	NM
R743	10K	NM
R769	2K:RS-C	560:RS-C
R772	2K:RS-C	560:RS-C
D701	DA204UT106	NM
Q716	2SC4177	NM

① TP701 MODE: 75% Color Bar/REC • EE (NTSC)

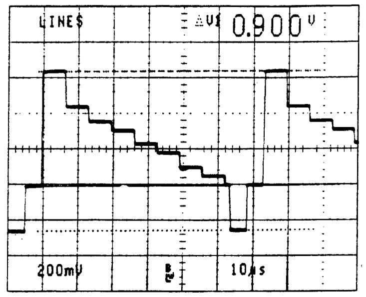

③ TP903 MODE: 75% Color Bar/REC • EE (NTSC)

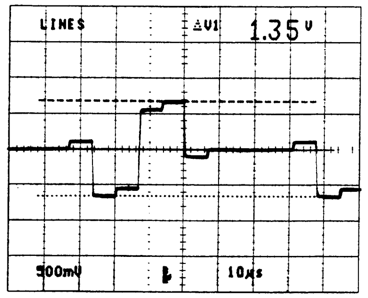

① TP701 MODE: 100% Color Bar/REC • EE (PAL)

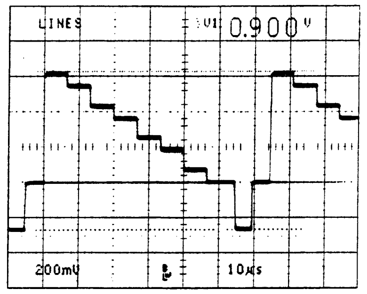

③ TP903 MODE: 100% Color Bar/REC • EE (PAL)

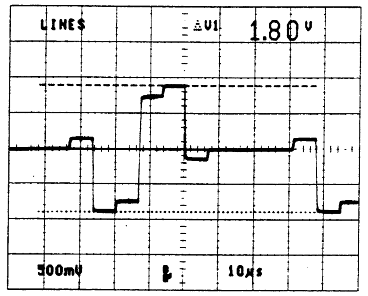

② TP902 MODE: 75% Color Bar/REC • EE (NTSC)

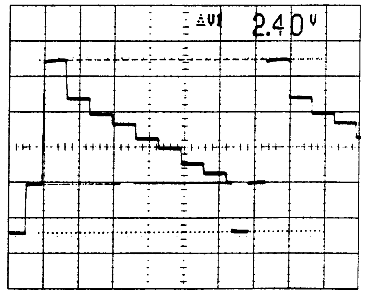

④ TP904 MODE: 75% Color Bar/REC • EE (NTSC)

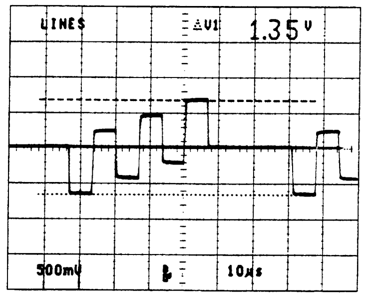

② TP902 MODE: 100% Color Bar/REC • EE (PAL)

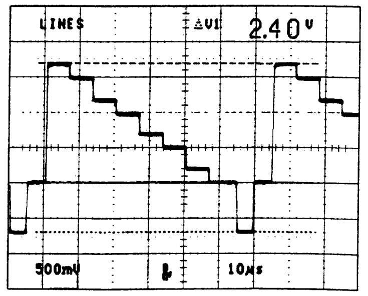

④ TP904 MODE: 100% Color Bar/REC • EE (PAL)

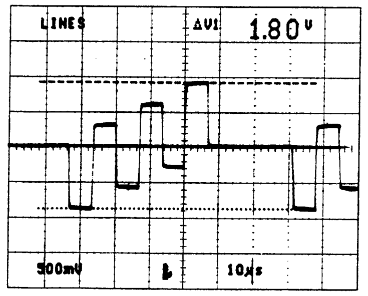

1 2 3 4 5

IO-149/149A (6/8)

BOARD SUFFIX : -14
MODEL DSR-80/80P

I J K L M N O P

IO-149/149A (7/8): VIDEO ANALOG IN/OUT PROCESS (DSR-80/80P)

DSR-80/80P

DSR-80/80P

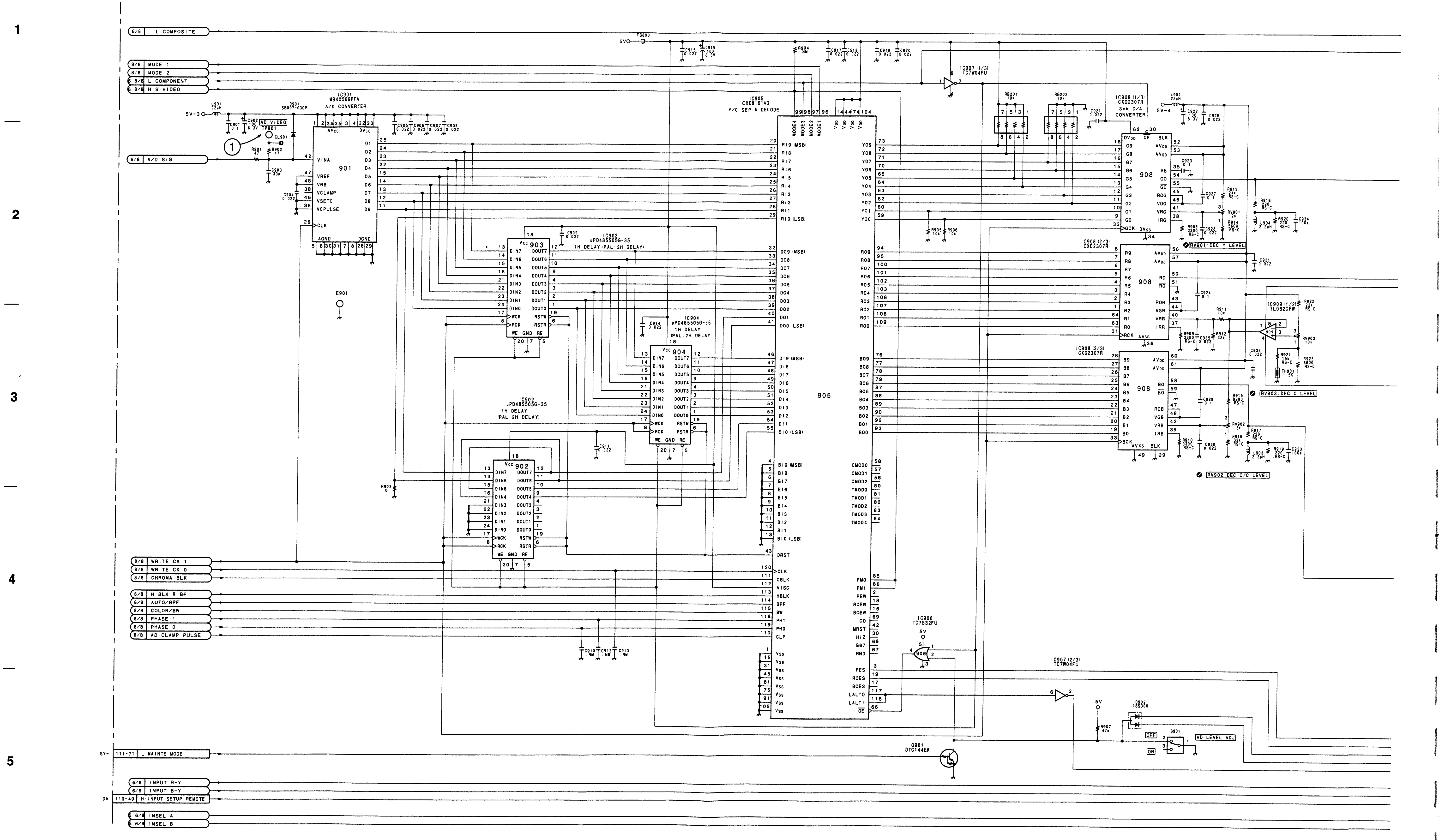

A B C D E F G H

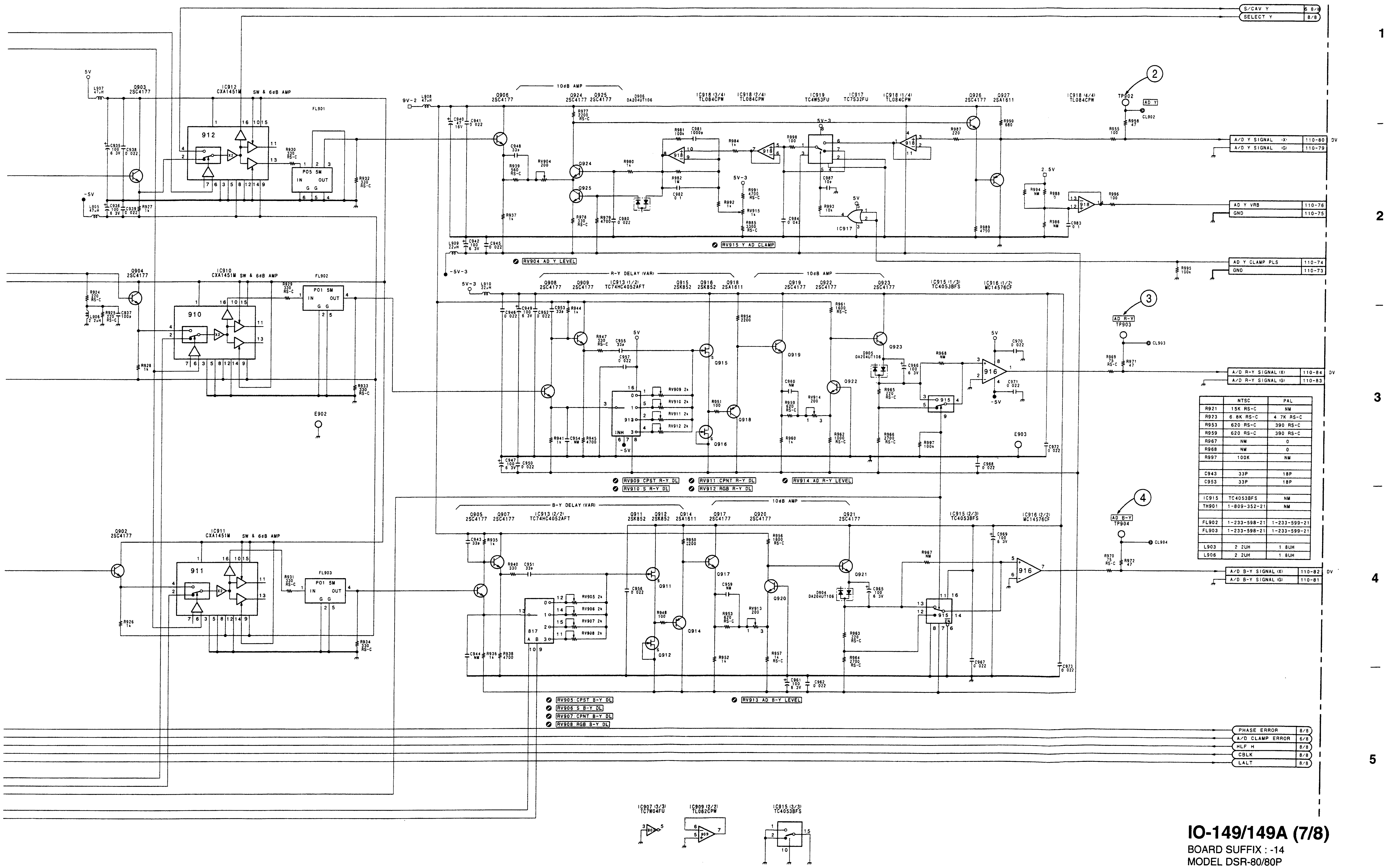

	NTSC	PAL
R921	15K RS-C	NM
R923	6.8K RS-C	4.7K RS-C
R953	620 RS-C	390 RS-C
R959	620 RS-C	390 RS-C
R967	NM	0
R968	NM	0
R997	100K	NM
C943	33P	18P
C953	33P	18P
IC915	TC4053BFS	NM
TH901	1-809-352-21	NM
FL902	1-233-598-21	1-233-599-21
FL903	1-233-598-21	1-233-599-21
L903	2.2UH	1.8UH
L906	2.2UH	1.8UH

IO-149/149A (7/8)

BOARD SUFFIX : -14
MODEL DSR-80/80P

IO-149/149A (8/8): VIDEO ANALOG IN/OUT PROCESS (DSR-80/80P)

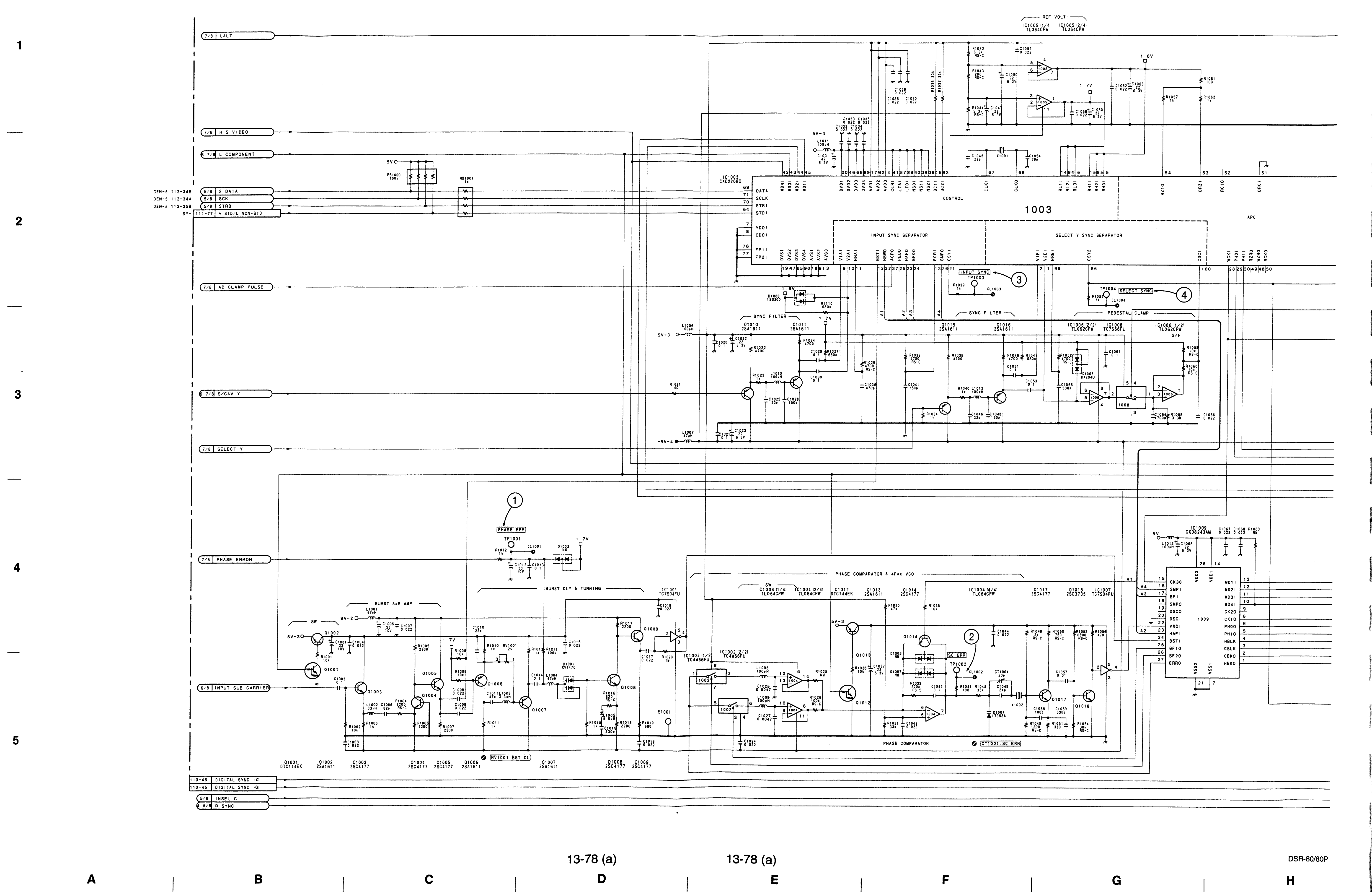

 IO-149/149A (8/8)

DSR-80/80P

DSR-80/80P

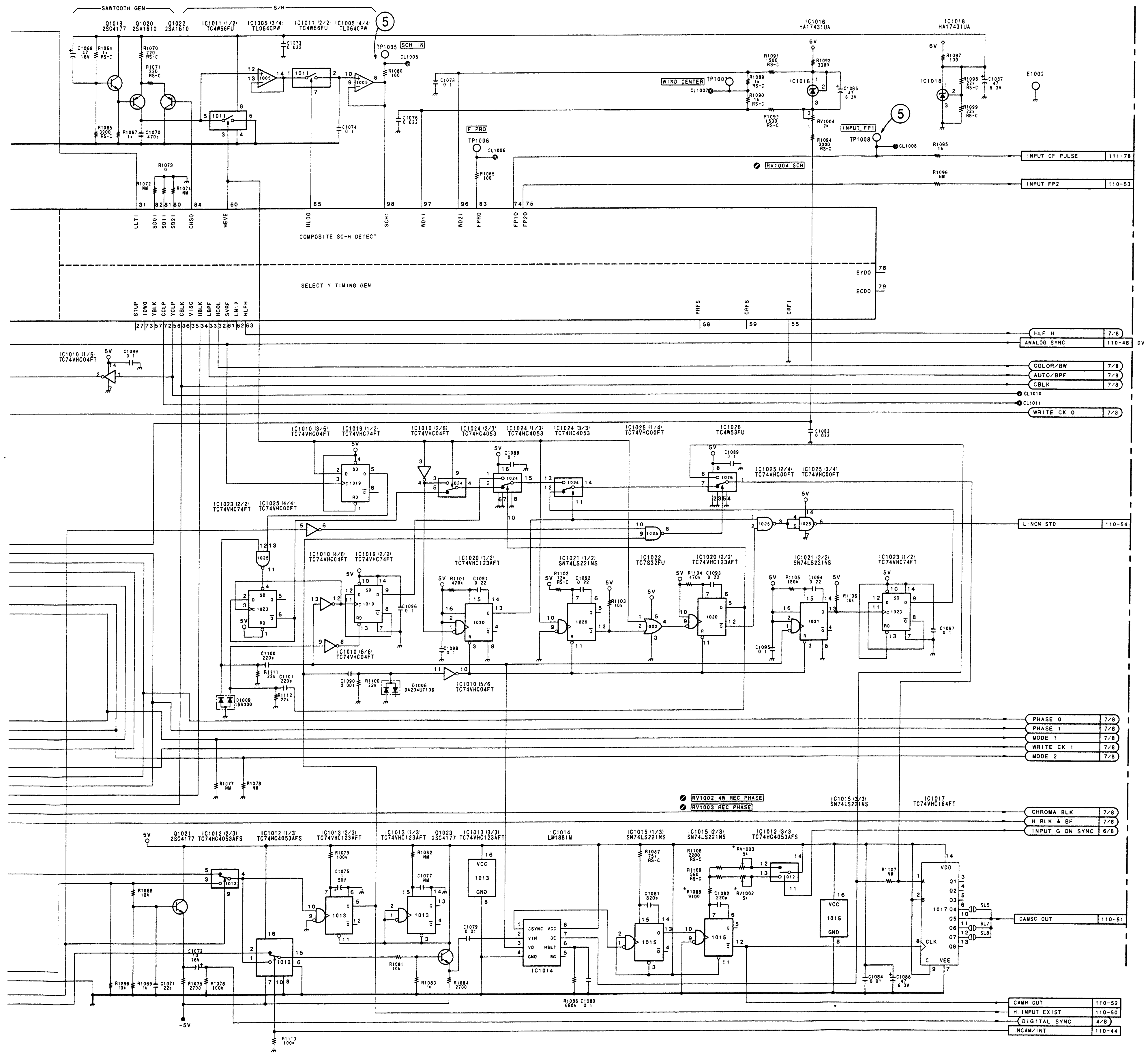

IO-149 (8/8)

① TP1001 MODE: 75% Color Bar/PB (NTSC)
③ TP1003 MODE: 75% Color Bar/PB (NTSC)

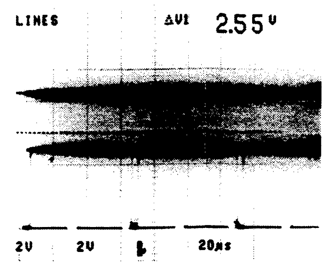

④ TP1004 MODE: 75% Color Bar/PB (NTSC)
③ TP1003 MODE: 75% Color Bar/PB (NTSC)

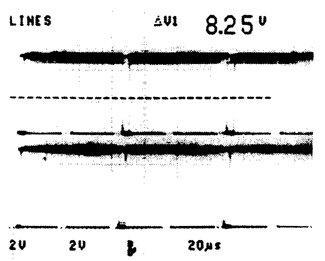

① TP1001 MODE: 100% Color Bar/PB (PAL)
③ TP1003 MODE: 100% Color Bar/PB (PAL)

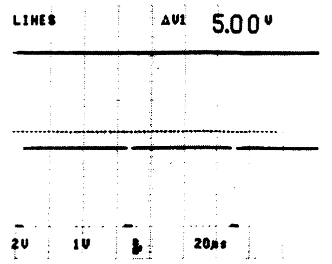

④ TP1004 MODE: 100% Color Bar/PB (PAL)
③ TP1003 MODE: 100% Color Bar/PB (PAL)

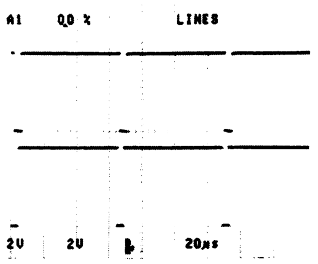

② TP1002 MODE: 75% Color Bar/PB (NTSC)
③ TP1003 MODE: 75% Color Bar/PB (NTSC)

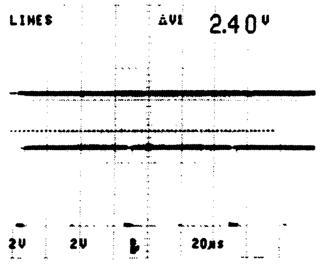

⑤ TP1005,1008 MODE: 75% Color Bar/PB (NTSC)
③ TP1003 MODE: 75% Color Bar/PB (NTSC)

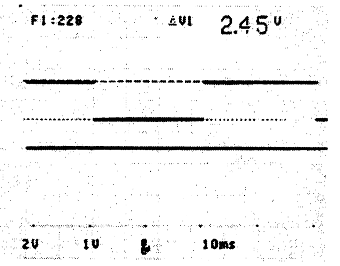

② TP1002 MODE: 100% Color Bar/PB (PAL)
③ TP1003 MODE: 100% Color Bar/PB (PAL)

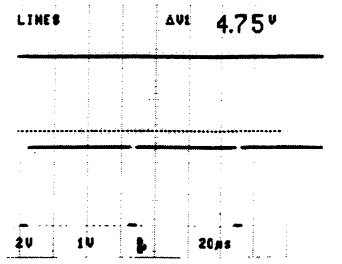

⑤ TP1005,1008 MODE: 100% Color Bar/PB (PAL)
③ TP1003 MODE: 100% Color Bar/PB (PAL)

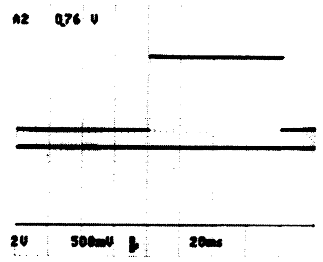

1

2

3

4

5

	NTSC	PAL
C1011	47P	22P
C1016	330P	220P
C1070	470P	390P
R1025	NM	330K RS-C
R1026	100K RS-C	330K RS-C
R1072	NM	0
R1077	NM	0
R1078	NM	0
R1091	1.5K RS-C	1.2K RS-C
R1092	1.5K RS-C	1.2K RS-C
X1001	1-760-109-21	1-760-183-21
X1002	1-527-722-91	1-760-457-91
D1002	NM	DA204UT106
D1003	NM	DA204UT106
D1007	NM	DA204UT106
L1004	47UH	33UH

*

REF NO	CHANGED INFORMATION	LOT NO
R1088	11k → 9.1k	802-
RV1002, 1003	2k → 5k	

IC1004 (3/4)
TL064CPW

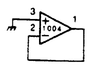

IO-149/149A (8/8)

BOARD SUFFIX : -14
MODEL DSR-80/80P

I | J | K | L | M | N | O | P

ONY-SP0754 / DRUCK 307

 IO-149/149A/149B/149C

IO-149B/149C: VIDEO ANALOG OUT PROCESS (DSR-60/60P)
IO-149/149A: VIDEO ANALOG IN/OUT PROCESS (DSR-80/80P)

IO-149 (2/8)

① TP101 MODE: 75% Color Bar/EE • PB (NTSC)

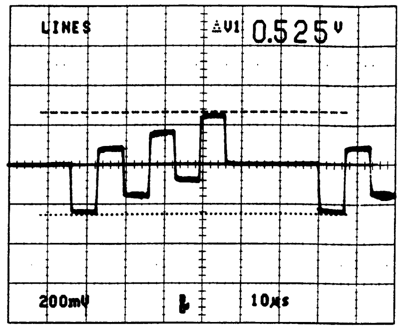

① TP101 MODE: 100% Color Bar/EE • PB (PAL)

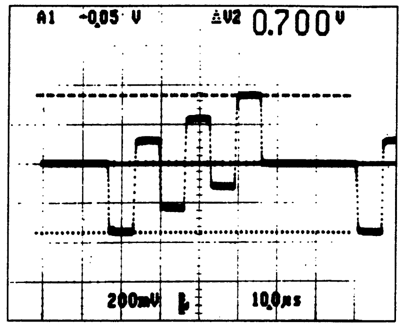

② TP102 MODE: 75% Color Bar/EE • PB (NTSC)

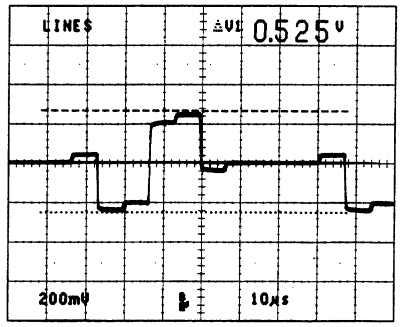

② TP102 MODE: 100% Color Bar/EE • PB (PAL)

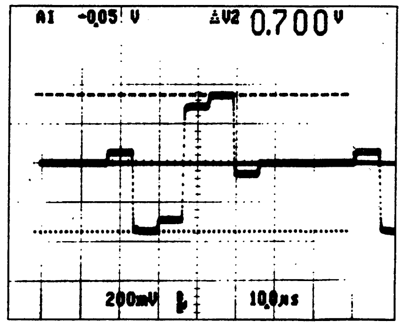

③ TP103 MODE: 75% Color Bar/EE • PB (NTSC)

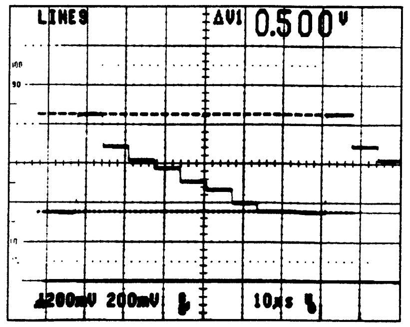

③ TP103 MODE: 100% Color Bar/EE • PB (PAL)

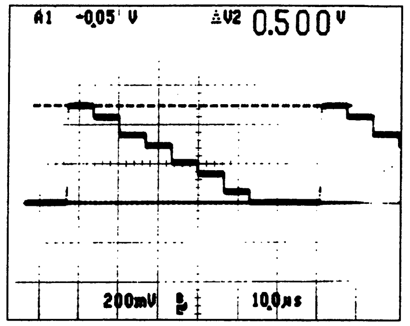

IO-149 (3/8)

① TP301 MODE: 75% Color Bar/EE • PB (NTSC)

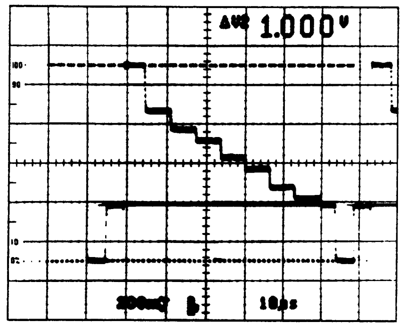

① TP301 MODE: 100% Color Bar/EE • PB (PAL)

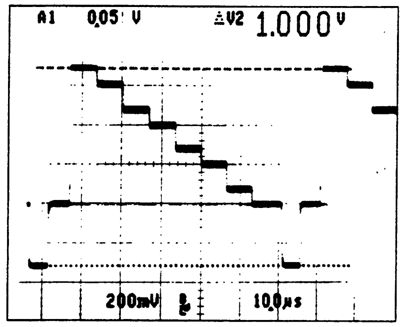

② TP302 MODE: 75% Color Bar/EE • PB (NTSC)

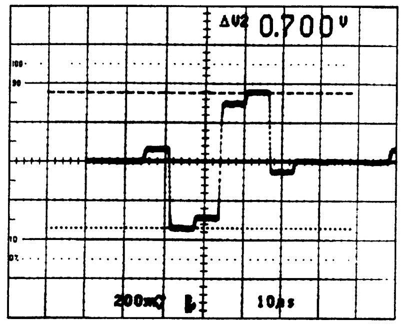

② TP302 MODE: 100% Color Bar/EE • PB (PAL)

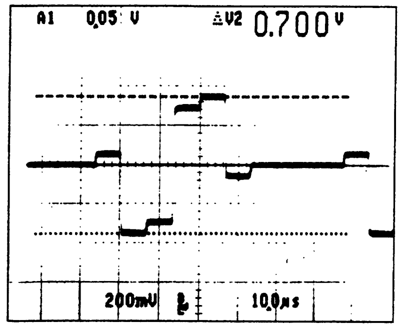

② TP302 MODE: 75% Color Bar/EE • PB (NTSC)

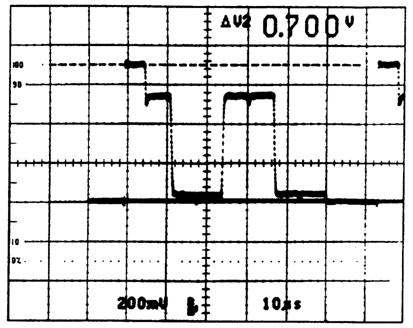

RGB (3 wire)

② TP302 MODE: 100% Color Bar/EE • PB (PAL)

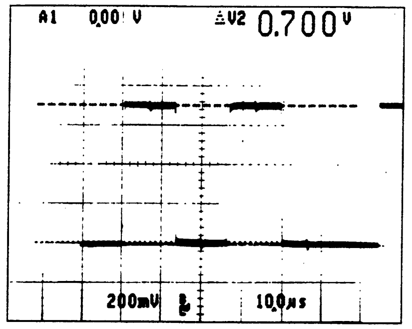

RGB (3 wire)

③ TP303 MODE: 75% Color Bar/EE • PB (NTSC)

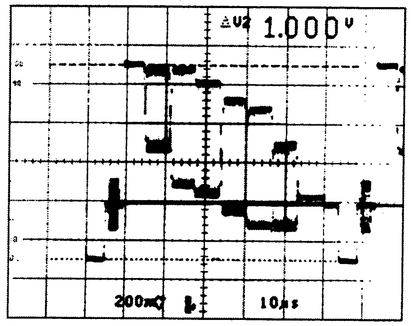

③ TP303 MODE: 100% Color Bar/EE • PB (PAL)

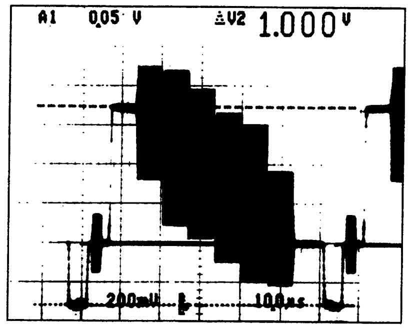

IO-149/149A/149B/149C

④ TP304 MODE: 75% Color Bar/EE • PB (NTSC)

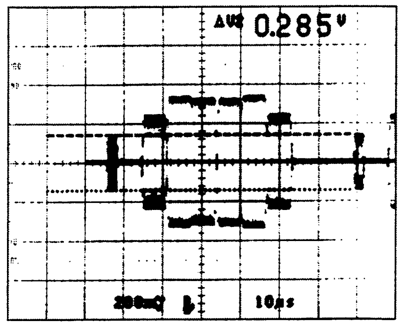

⑤ TP305 MODE: 75% Color Bar/EE • PB (NTSC)

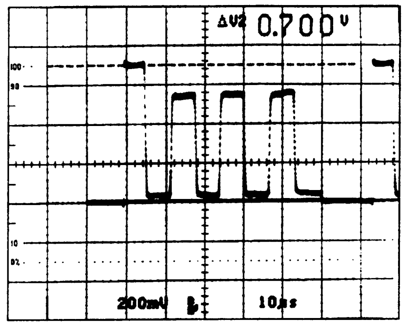

RGB (3 wire)

⑥ TP306 MODE: 75% Color Bar/EE • PB (NTSC)

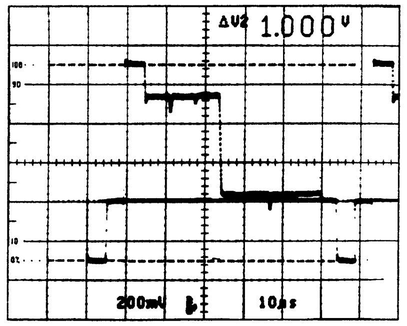

RGB (3 wire)

④ TP304 MODE: 100% Color Bar/EE • PB (PAL)

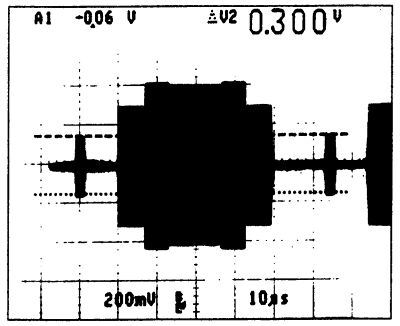

⑤ TP305 MODE: 100% Color Bar/EE • PB (PAL)

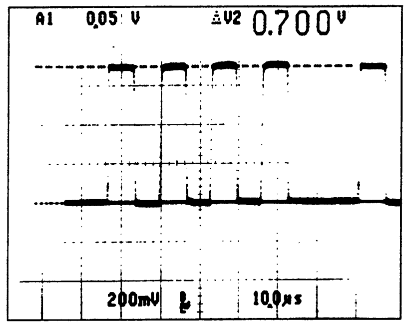

RGB (3 wire)

⑥ TP306 MODE: 100% Color Bar/EE • PB (PAL)

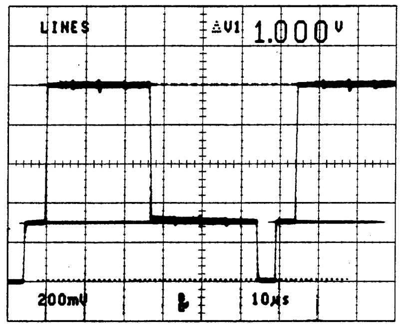

RGB (3 wire)

⑤ TP305 MODE: 75% Color Bar/EE • PB (NTSC)

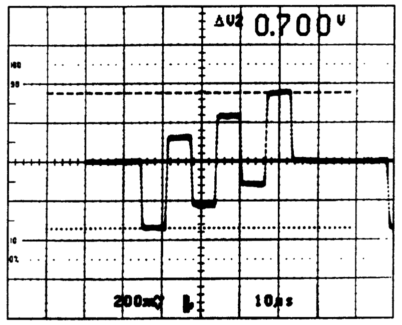

⑥ TP306 MODE: 75% Color Bar/EE • PB (NTSC)

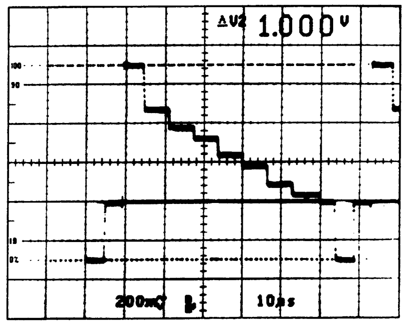

⑦ TP307 MODE: 75% Color Bar/EE • PB (NTSC)

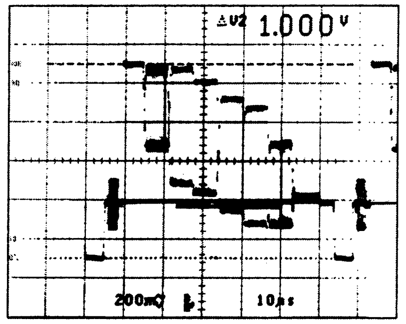

(Chara On)

⑤ TP305 MODE: 100% Color Bar/EE • PB (PAL)

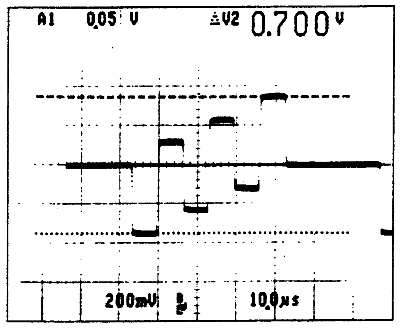

⑥ TP306 MODE: 100% Color Bar/EE • PB (PAL)

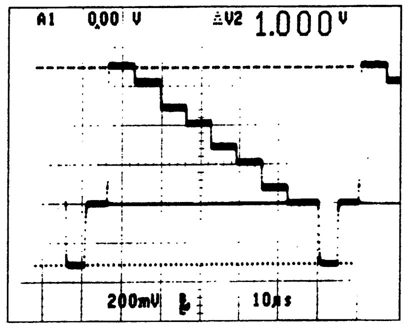

⑦ TP307 MODE: 100% Color Bar/EE • PB (PAL)

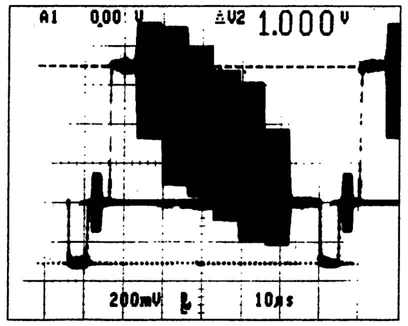

(Chara On)

ƆNY-SP0754 / DRUCK 309

IO-149B/149C (1/8): VIDEO ANALOG OUT PROCESS (DSR-60/60P)
IO-149/149A (1/8): VIDEO ANALOG IN/OUT PROCESS (DSR-80/80P)

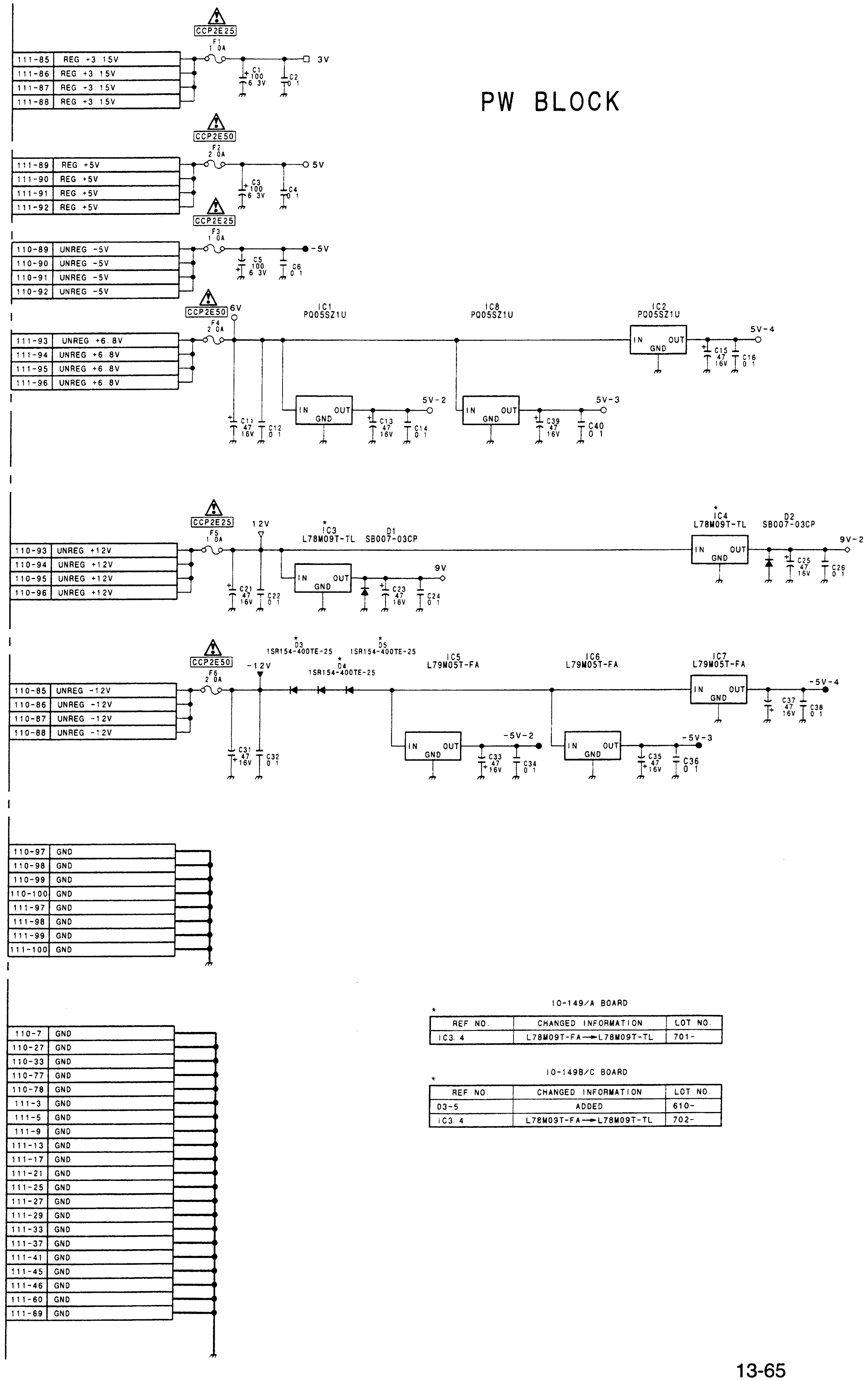

IO-149/A BOARD

*

REF NO.	CHANGED INFORMATION	LOT NO.
IC3, 4	L78M09T-FA → L78M09T-TL	701-

IO-149B/C BOARD

*

REF NO.	CHANGED INFORMATION	LOT NO.
D3-5	ADDED	610-
IC3, 4	L78M09T-FA → L78M09T-TL	702-

IO-149/149A/149B/149C (1/8)
BOARD SUFFIX : -13
MODEL DSR-80/80P/60/60P

IO-149B/149C (2/8): VIDEO ANALOG OUT PROCESS (DSR-60/60P)
IO-149/149A (2/8): VIDEO ANALOG IN/OUT PROCESS (DSR-80/80P)

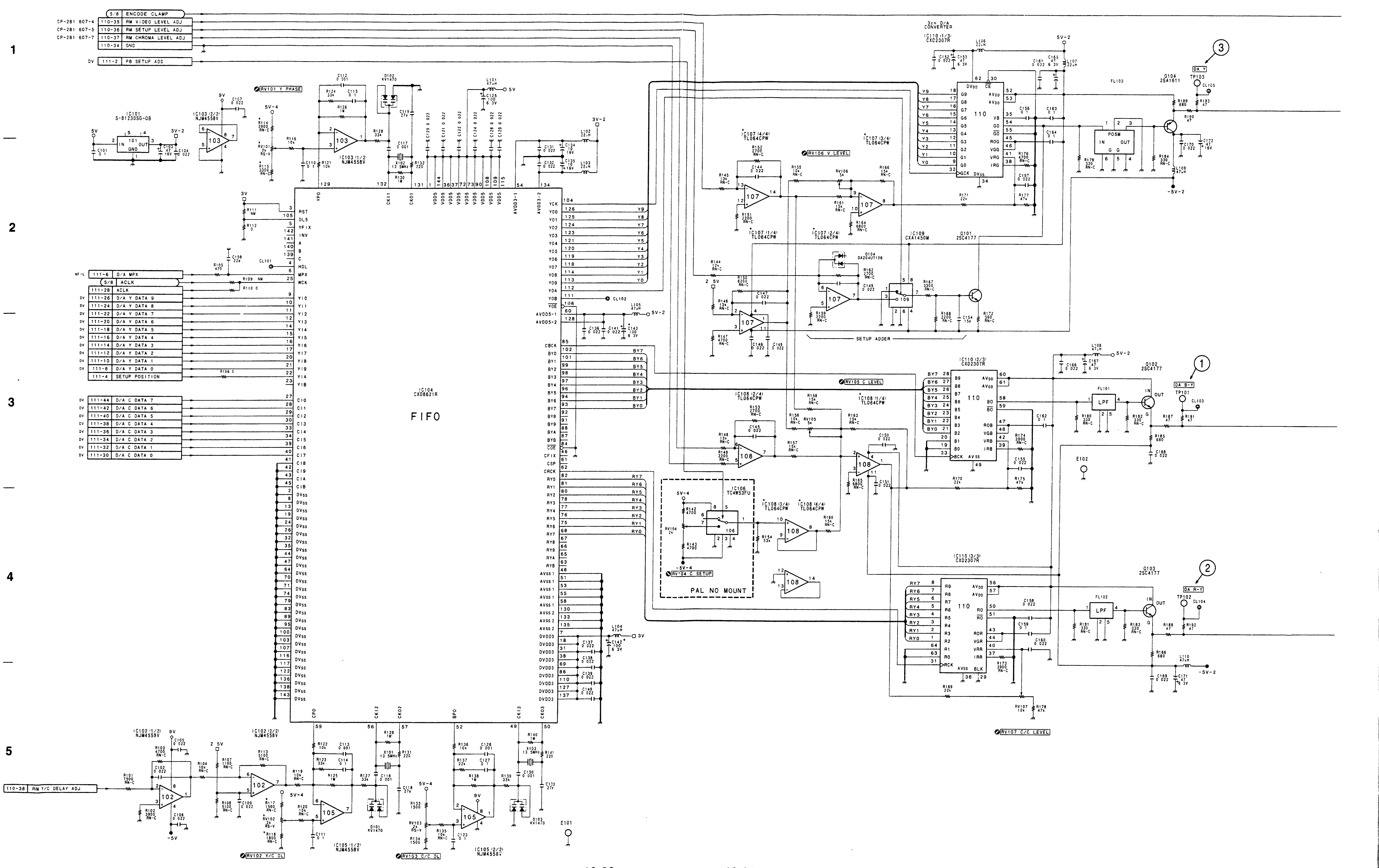

 IO-149/149A/149B/149C (2/8)

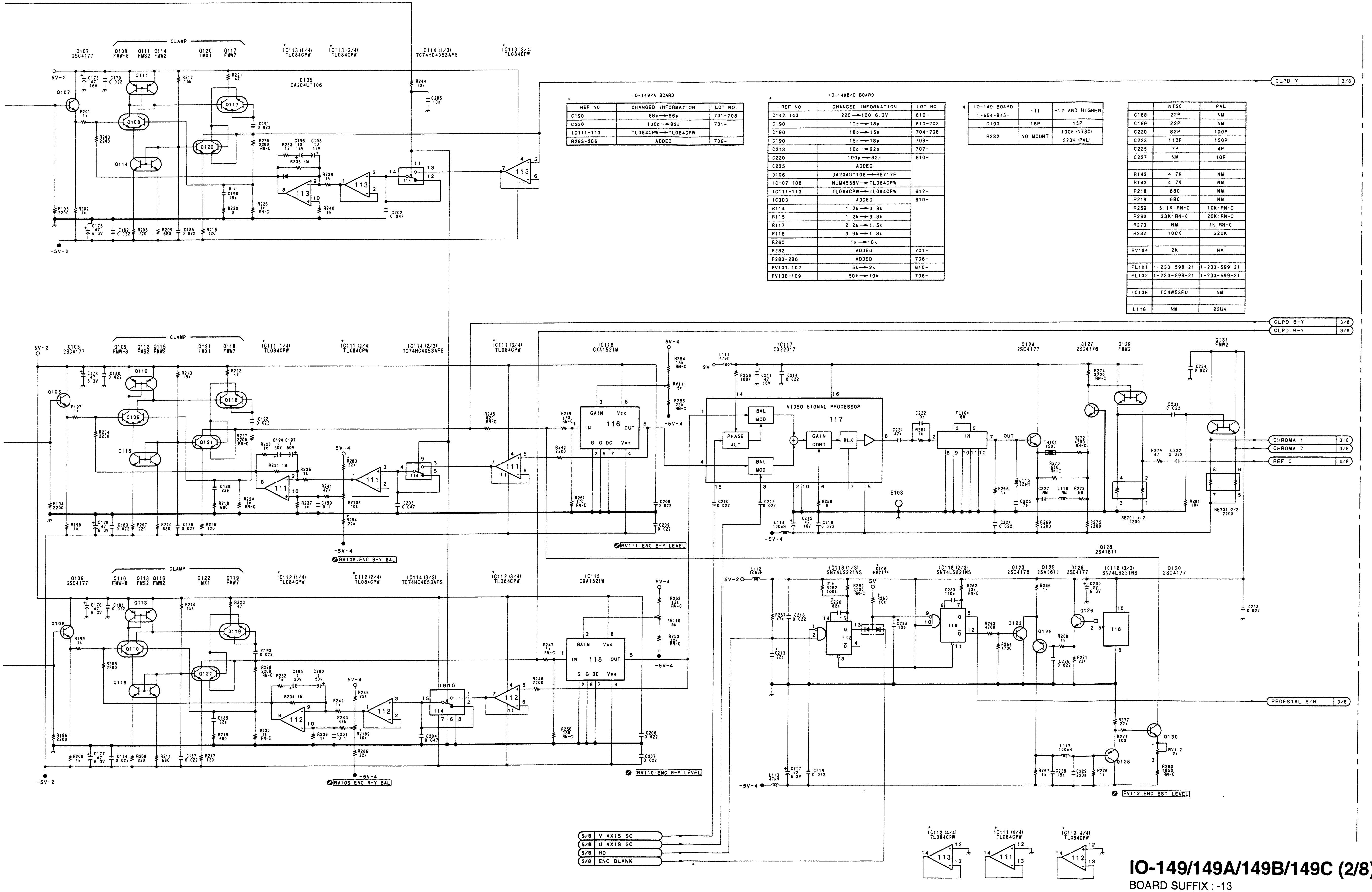

* IO-149/A BOARD

REF NO	CHANGED INFORMATION	LOT NO
C190	68p → 56p	701-708
C220	100p → 82p	701-
IC111-113	TL064CPW → TL084CPW	
R283-286	ADDED	706-

* IO-149B/C BOARD

REF NO	CHANGED INFORMATION	LOT NO
C142 143	220 → 100 6.3V	610-
C190	12p → 18p	610-703
C190	18p → 15p	704-708
C190	15p → 18p	709-
C213	10p → 22p	707-
C220	100p → 82p	610-
C235	ADDED	
D106	DA204UT106 → RB717F	
IC107 108	NJM4558V → TL064CPW	
IC111-113	TL064CPW → TL084CPW	612-
IC303	ADDED	610-
R114	1.2k → 3.9k	
R115	1.2k → 3.3k	
R117	2.2k → 1.5k	
R118	3.9k → 1.8k	
R260	1k → 10k	
R282	ADDED	701-
R283-286	ADDED	706-
RV101 102	5k → 2k	610-
RV108-109	50k → 10k	706-

# IO-149 BOARD 1-664-945-	-11	-12 AND HIGHER
C190	18P	15P
R282	NO MOUNT	100K (NTSC) 220K (PAL)

	NTSC	PAL
C188	22P	NM
C189	22P	NM
C220	82P	100P
C223	110P	150P
C225	7P	4P
C227	NM	10P
R142	4.7K	NM
R143	4.7K	NM
R218	680	NM
R219	680	NM
R259	5.1K RN-C	10K RN-C
R262	33K RN-C	20K RN-C
R273	NM	1K RN-C
R282	100K	220K
RV104	2K	NM
FL101	1-233-598-21	1-233-599-21
FL102	1-233-598-21	1-233-599-21
IC106	TC4W53FU	NM
L116	NM	22UH

1
2
3
4
5

IO-149/149A/149B/149C (2/8)

BOARD SUFFIX : -13
MODEL DSR-80/80P/60/60P

IO-149/149A/149B/149C (3/8)

IO-149B/149C (3/8): VIDEO ANALOG OUT PROCESS (DSR-60/60P)
IO-149/149A (3/8): VIDEO ANALOG IN/OUT PROCESS (DSR-80/80P)

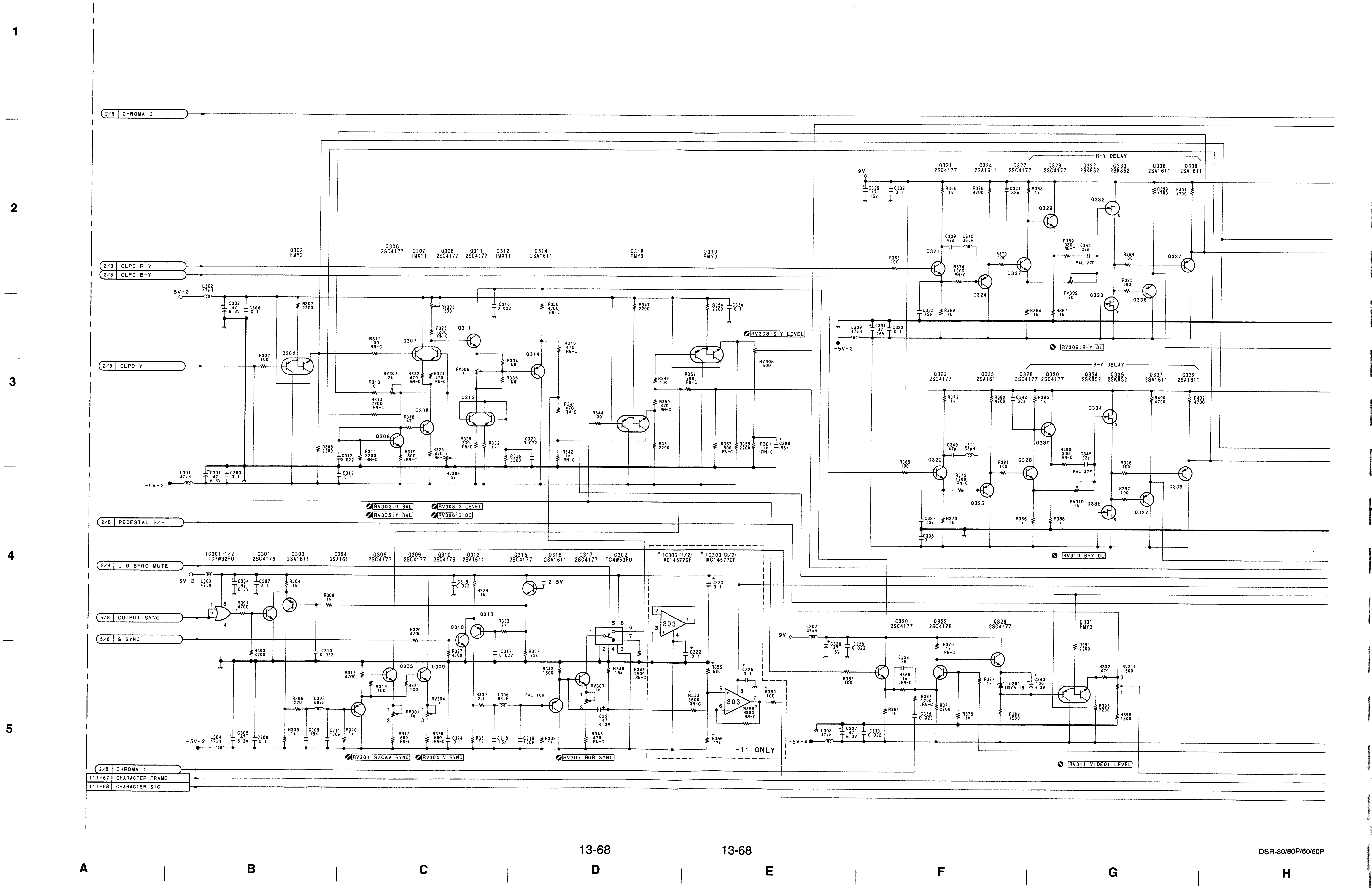

13-68

SONY-SP0754 / DRUCK 314

 IO-149/149A/149B/149C (3/8)

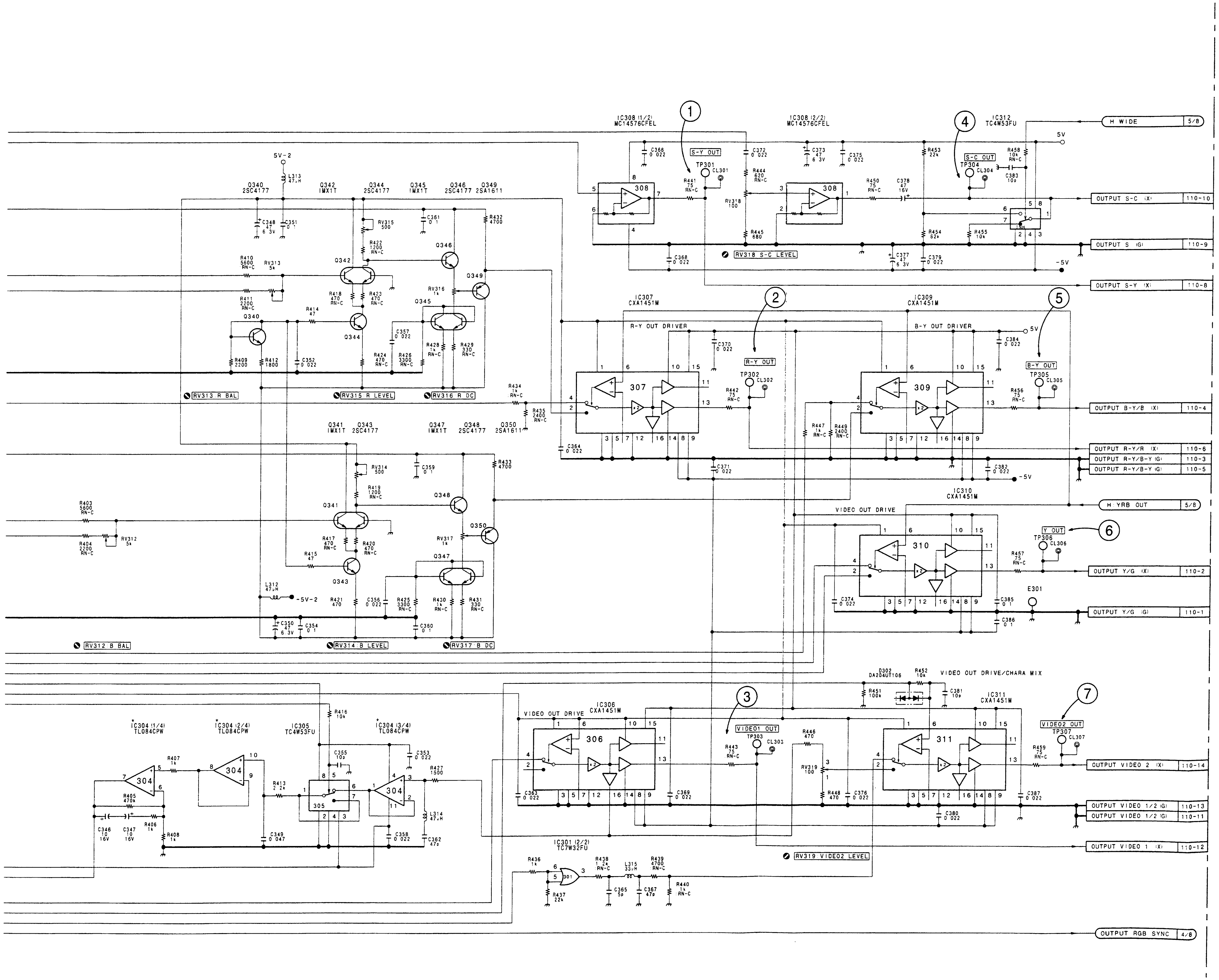

1

* IO-149/A BOARD

REF NO	CHANGED INFORMATION	LOT NO
C322. 323. 325	DELETED	701-
C388	68p → 56p	701-708
IC303	TL082CPW → MC14577CF	701-
R358	8.2k → 6.8k	

* IO-149B/C BOARD

REF NO.	CHANGED INFORMATION	LOT NO
C322. 323. 325	DELETED	702-
C343	100 → 100 6.3V	610-
C388	68p → 56p	704-708
IC303	TL082CPW → MC14577CF	610-
IC304	TL064CPW → TL084CPW	612-
R353	DELETED	701-
R355. 356	DELETED	702-
R358	8.2k → 6.8k	610-701
R358. 360	DELETED	702-

2

	NTSC	PAL
C311	130P	220P
C319	130P	220P
C334	7P	5P
C344	22P	27P
C345	22P	27P
C362	47P	27P
R434	1K RN-C	1.6K RN-C
R435	2.4K RN-C	1.8K RN-C
R447	1K RN-C	1.6K RN-C
R449	2.4K RN-C	1.8K RN-C
L305	68UH	100UH
L306	68UH	100UH

3

4

* IC304 (4/4) TL084CPW

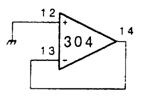

5

IO-149/149A/149B/149C (3/8)

BOARD SUFFIX : -13

MODEL DSR-80/80P/60/60P

IO-149B/149C: VIDEO ANALOG OUT PROCESS (DSR-60/60P)
IO-149/149A: VIDEO ANALOG IN/OUT PROCESS (DSR-80/80P)

IO-149 (4/8)

① TP501 MODE: 75% Color Bar/EE • PB (NTSC)

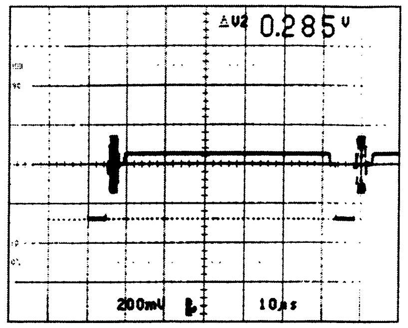

① TP501 MODE: 100% Color Bar/EE • PB (PAL)

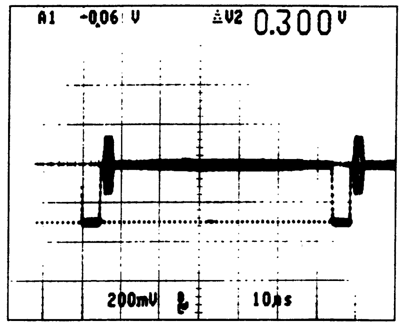

② TP502 MODE: 75% Color Bar/EE • PB (NTSC)

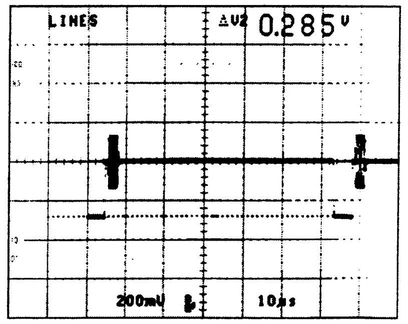

② TP502 MODE: 100% Color Bar/EE • PB (PAL)

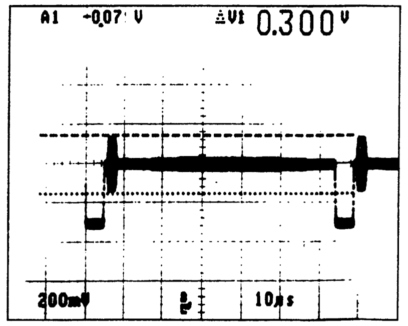

IO-149 (5/8)

① TP601 MODE: 75% Color Bar/EE • PB (NTSC)

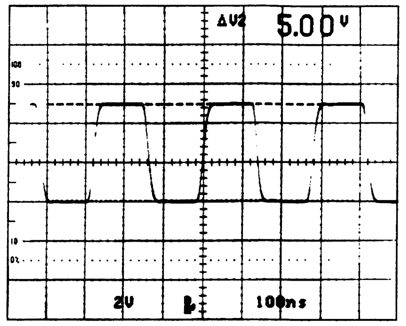

① TP601 MODE: 100% Color Bar/EE • PB (PAL)

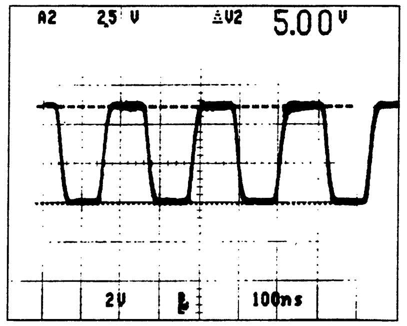

④ TP604 MODE: 75% Color Bar/EE • PB (NTSC)
① TP601 MODE: 75% Color Bar/EE • PB (NTSC)

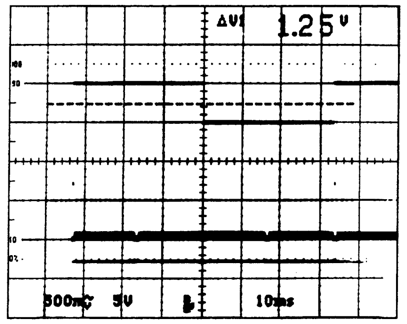

④ TP604 MODE: 100% Color Bar/EE • PB (PAL)
① TP601 MODE: 100% Color Bar/EE • PB (PAL)

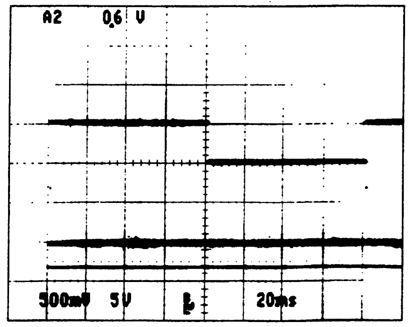

② TP602 MODE: 75% Color Bar/EE • PB (NTSC)

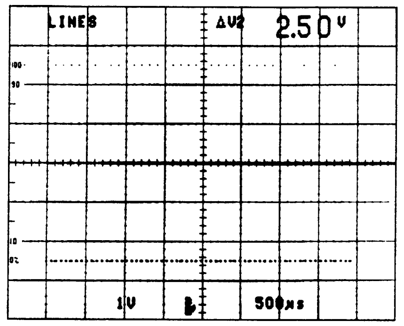

(DC 2.5V Adj)

② TP602 MODE: 100% Color Bar/EE • PB (PAL)

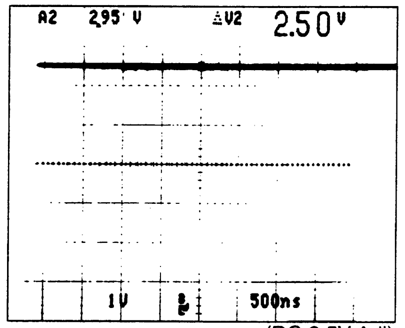

(DC 2.5V Adj)

③ TP603 MODE: 75% Color Bar/EE • PB (NTSC)

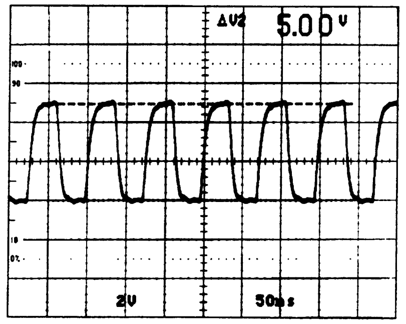

③ TP603 MODE: 100% Color Bar/EE • PB (PAL)

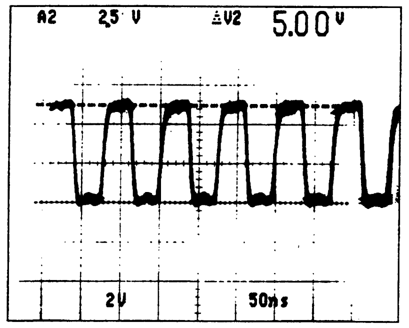

SONY-SP0754 / DRUCK 316

 IO-149/149A/149B/149C (4/8)

IO-149B/149C (4/8): VIDEO ANALOG OUT PROCESS (DSR-60/60P)
IO-149/149A (4/8): VIDEO ANALOG IN/OUT PROCESS (DSR-80/80P)

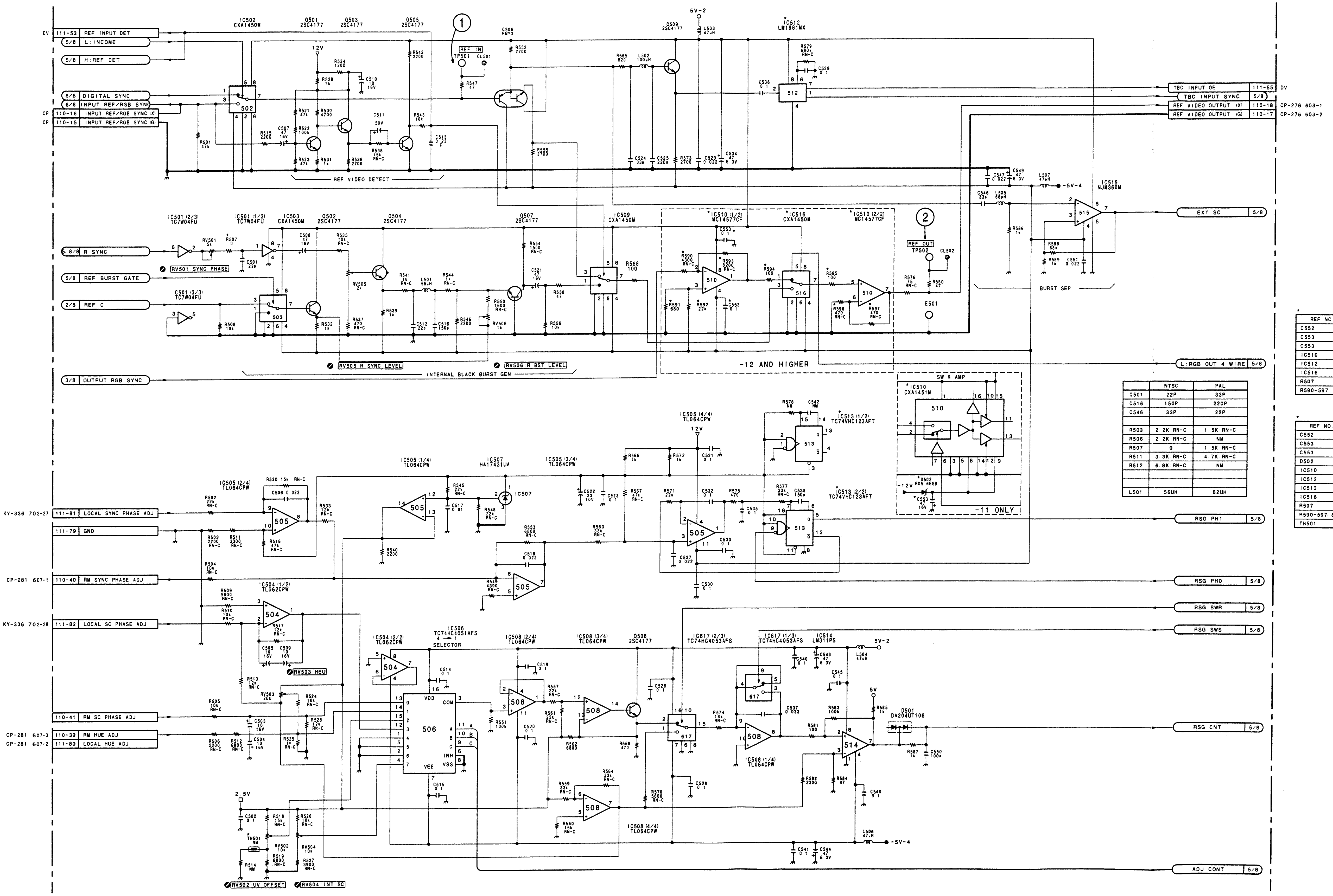

	NTSC	PAL
C501	22P	33P
C516	150P	220P
C546	33P	22P
R503	2.2K:RN-C	1.5K:RN-C
R506	2.2K:RN-C	NM
R507	0	1.5K:RN-C
R511	3.3K:RN-C	4.7K:RN-C
R512	6.8K:RN-C	NM
L501	56UH	82UH

* IO-149/A BOARD

REF NO.	CHANGED INFORMATION	LOT NO.
C552	ADDED	701-
C553	ADDED	701
C553	47 → 0.1	701-
IC510	CXA1451M-TH → MC14577CFEL	
IC512	LM1881M → LM1881MX	
IC516	ADDED	
R507	2.7k → 0	
R590-597	ADDED	

* IO-149B/C BOARD

REF NO.	CHANGED INFORMATION	LOT NO.
C552	ADDED	702-
C553	ADDED	610-701
C553	47 → 0.1	702-
D502	ADDED	610-
IC510	CXA1451M → MC14577CFEL	702-
IC512	LM1881M → LM1881MX	610-
IC513	TC74VHC123AFS → TC74VHC123AFT	802-
IC516	ADDED	702-
R507	2.7k → 0	610-
R590-597. 662	ADDED	702-
TH501	DELETED	610-

IO-149/149A/149B/149C (4/8)
BOARD SUFFIX : -13
MODEL DSR-80/80P/60/60P

 IO-149/149A/149B/149C (5/8)

IO-149B/149C (5/8): VIDEO ANALOG OUT PROCESS (DSR-60/60P)
IO-149/149A (5/8): VIDEO ANALOG IN/OUT PROCESS (DSR-80/80P)

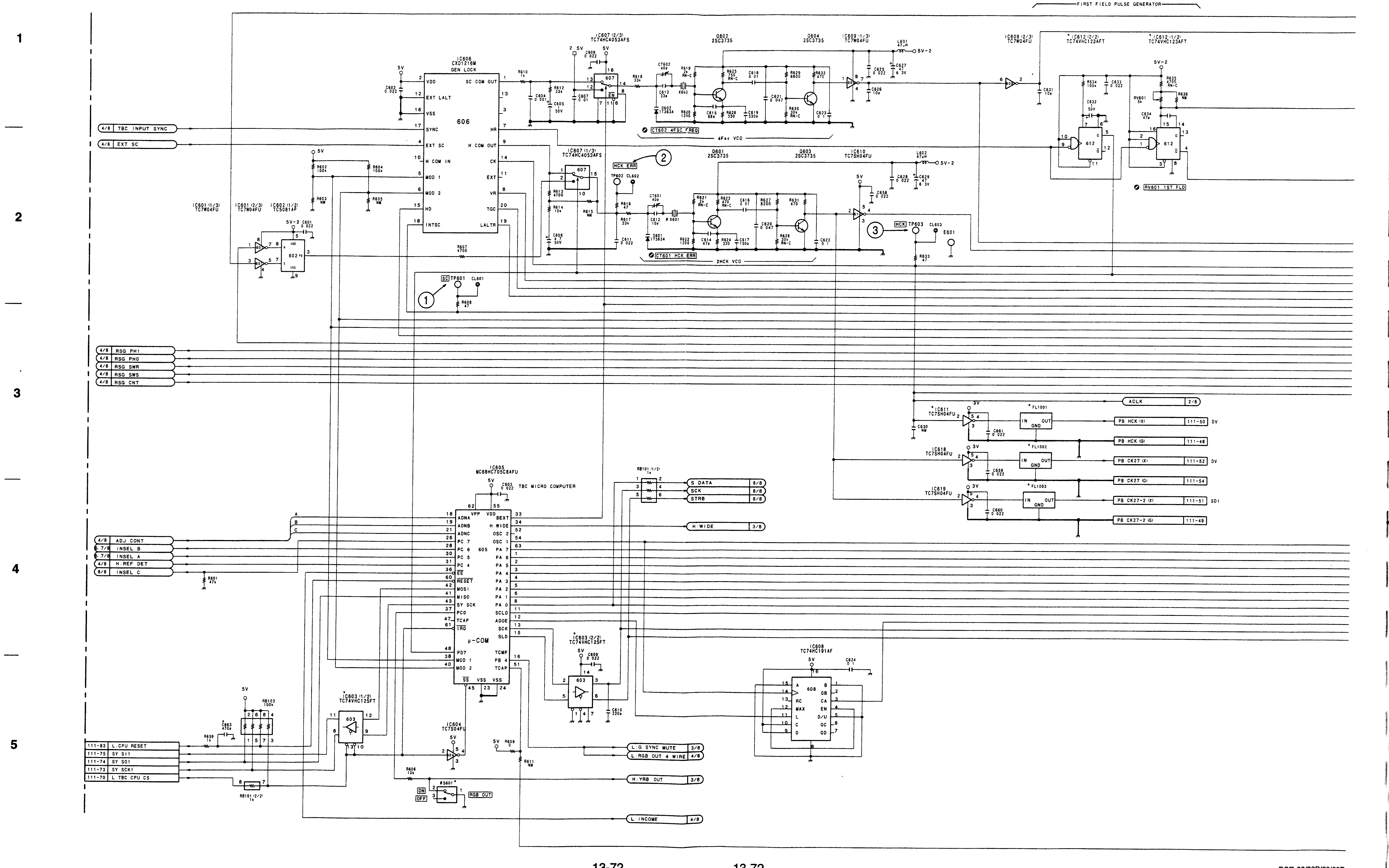

A B C D E F G H

DSR-80/80P/60/60P

SONY-SP0754 /DRUCK 318

 IO-149/149A/149B/149C (5/8)

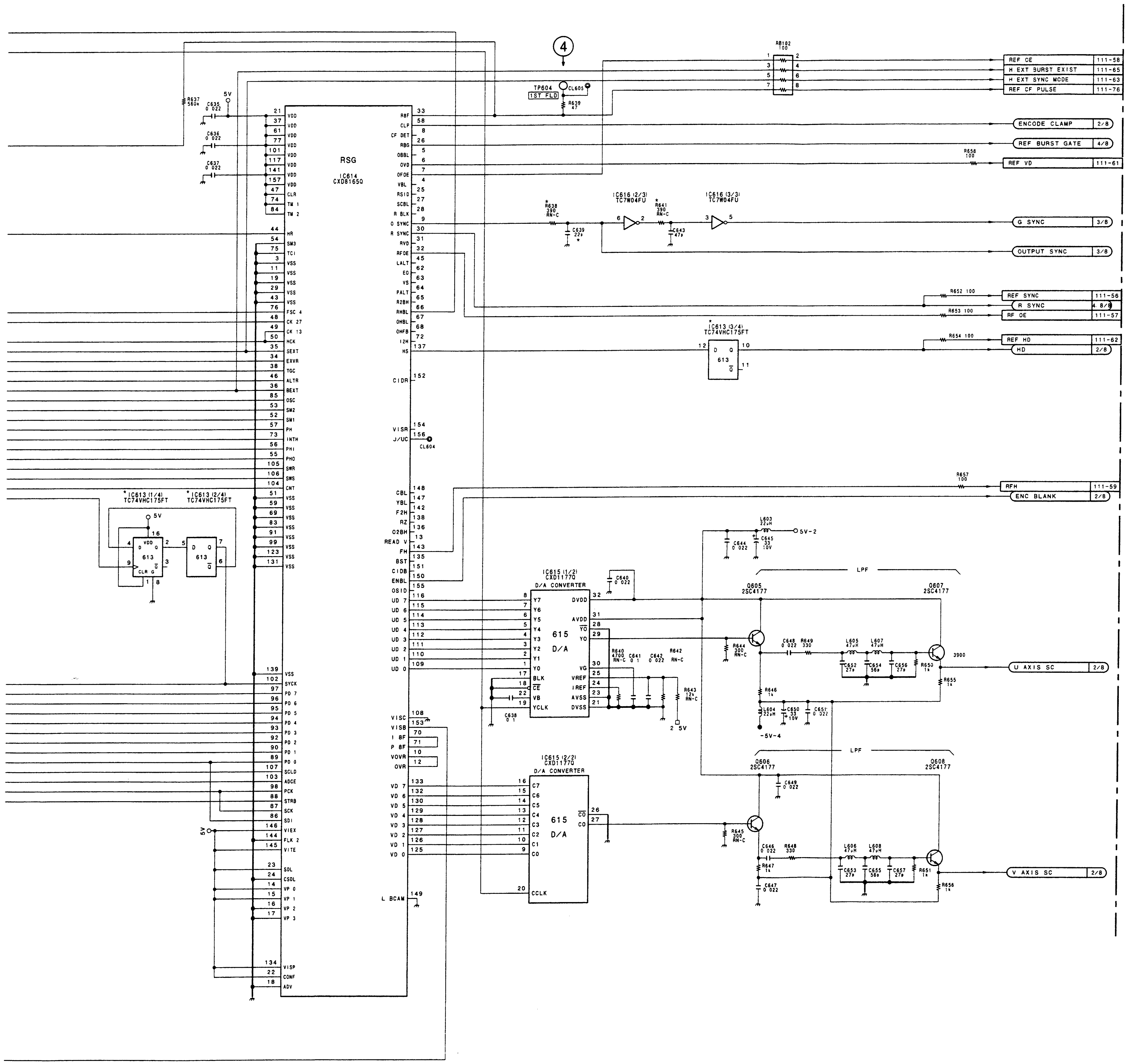

* IO-149/A BOARD

REF NO	CHANGED INFORMATION	LOT NO
C639	ADDED	701-
IC603	TC74VHC125FS→TC74VHC125FT	802-
IC611	TC7S04FU→TC7SH04FU	701-
IC612	TC74VHC123AFS→TC74VHC123AFT	802-
IC613	TC74VHC175FS→TC74VHC175FT	
R638	ADDED	701-
R641	1.5k→390	

* IO-149B/C BOARD

REF NO.	CHANGED INFORMATION	LOT NO.
C639	ADDED	610-
C663	ADDED	
FL1001-1003	ADDED	
IC603	TC74VHC125FS→TC74VHC125FS	802-
IC611	TC7S04FU→TC7SH04FU	610-
IC612	TC74VHC123AFS→TC74VHC123AFT	802-
IC613	TC74VHC175AFS→TC74VHC175FT	
R638	0→390	610-
R641	1.5k→390	
R659	ADDED	
S601	DELETED	702-

# IO-149 BOARD 1-664-945-	-11	-12 AND HIGHER
S601	1-571-275-41	NO MOUNT
X601	1-760-626-21	1-767-262-21

	NTSC	PAL
C611	0.022	0.1
C613	33P	27P
C639	22P	18P
C652	27P	33P
C653	27P	33P
C654	56P	68P
C655	56P	68P
C656	27P	33P
C657	27P	33P
R602	100K	NM
R603	NM	0
R604	100K	NM
R605	NM	0
R613	4.7K	NM
R615	NM	4.7K
R637	560K	680K:RN-C
R638	390:RN-C	2.2K:RN-C
R640	4.7K RN-C	3.3K:RN-C
R641	390:RN-C	910 RN-C
R644	300:RN-C	220:RN-C
R645	300:RN-C	220:RN-C
L605	47UH	27UH
L606	47UH	27UH
L607	47UH	27UH
L608	47UH	27UH
X602	1-527-722-91	1-760-457-91

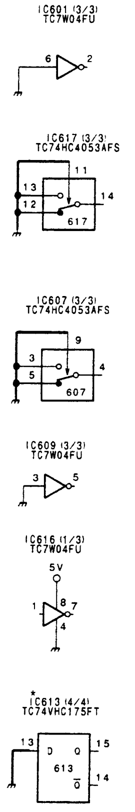

IO-149/149A/149B/149C (5/8)

BOARD SUFFIX : -13

MODEL DSR-80/80P/60/60P

ↄNY-SP0754 / DRUCK 319

IO-149/149A (6/8): VIDEO ANALOG IN/OUT PROCESS (DSR-80/80P)

DSR-80/80P

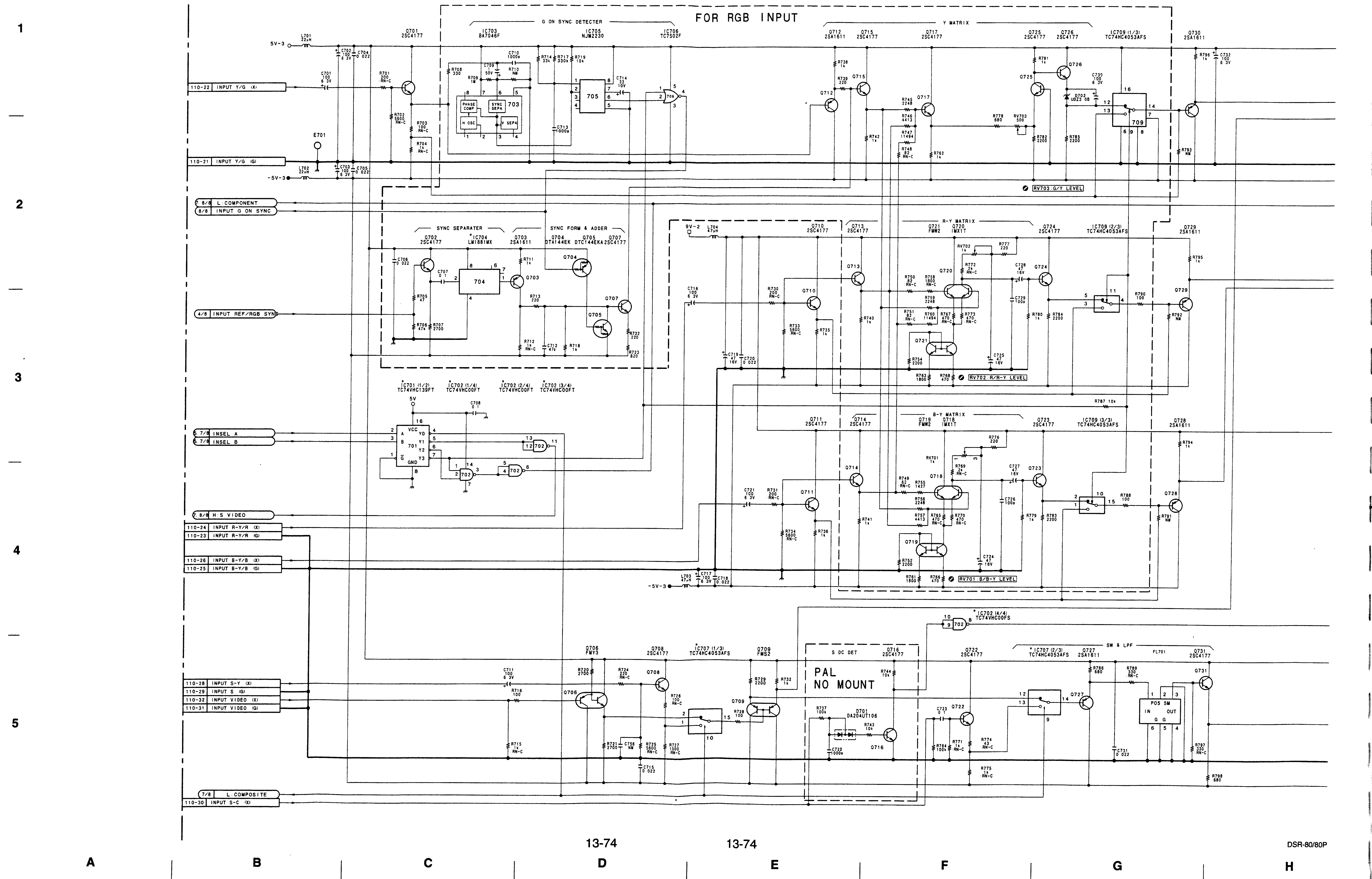

SONY-SP0754 / DRUCK 320

DSR-80/80P

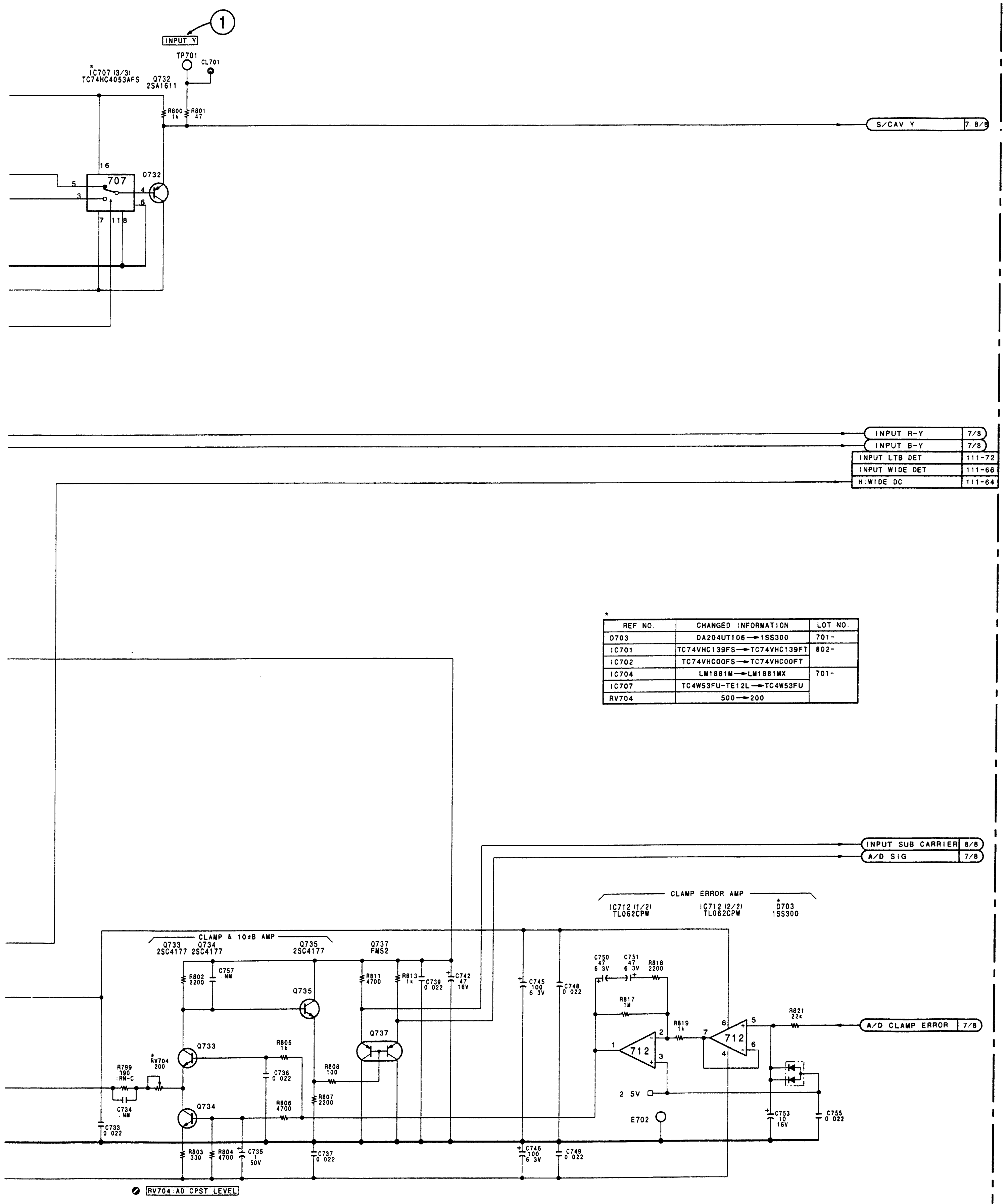

REF NO.	CHANGED INFORMATION	LOT NO.
D703	DA204UT106 → 1SS300	701-
IC701	TC74VHC139FS → TC74VHC139FT	802-
IC702	TC74VHC00FS → TC74VHC00FT	
IC704	LM1881M → LM1881MX	701-
IC707	TC4W53FU-TE12L → TC4W53FU	
RV704	500 → 200	

	NTSC	PAL
C722	0.001	NM
R737	100K	NM
R743	10K	NM
R744	10K	NM
R769	2K:RN-C	560 RN-C
R772	2K:RN-C	560:RN-C
D701	DA204UT106	NM
Q716	2SC4177	NM

IC701 (2/2)
TC74VHC139FT

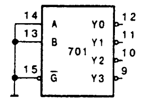

① TP701 MODE: 75% Color Bar/REC • EE (NTSC)

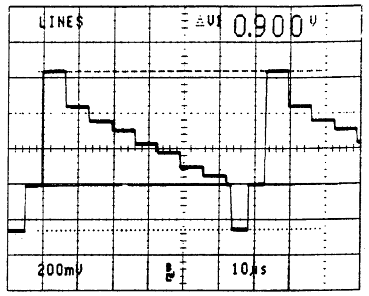

③ TP903 MODE: 75% Color Bar/REC • EE (NTSC) 1

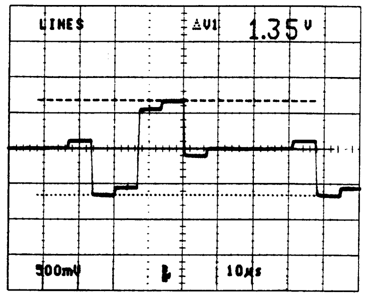

① TP701 MODE: 100% Color Bar/REC • EE (PAL)

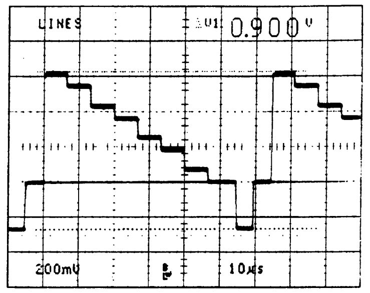

③ TP903 MODE: 100% Color Bar/REC • EE (PAL) 2

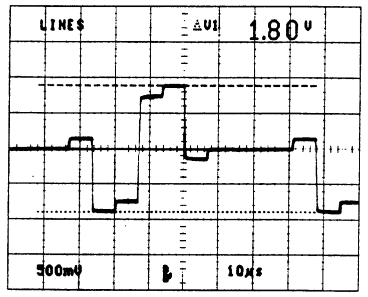

② TP902 MODE: 75% Color Bar/REC • EE (NTSC)

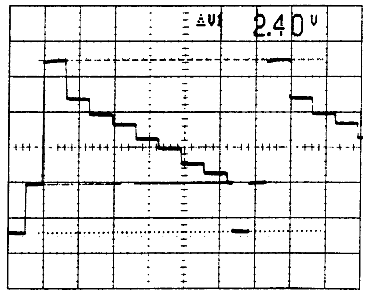

④ TP904 MODE: 75% Color Bar/REC • EE (NTSC) 3

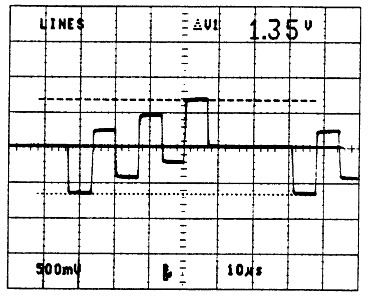

② TP902 MODE: 100% Color Bar/REC • EE (PAL)

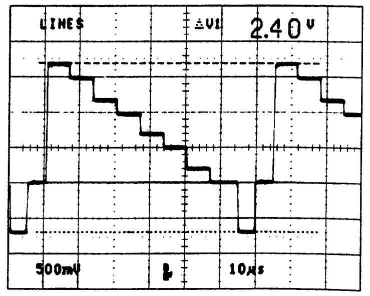

④ TP904 MODE: 100% Color Bar/REC • EE (PAL) 4

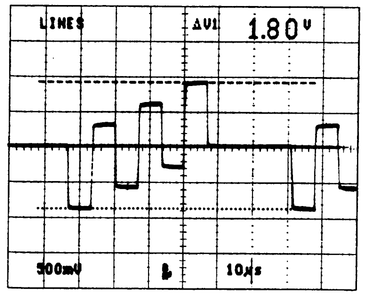

5

IO-149/149A (6/8)
BOARD SUFFIX : -13
MODEL DSR-80/80P

IO-149/149A (7/8): VIDEO ANALOG IN/OUT PROCESS (DSR-80/80P)

DSR-80/80P

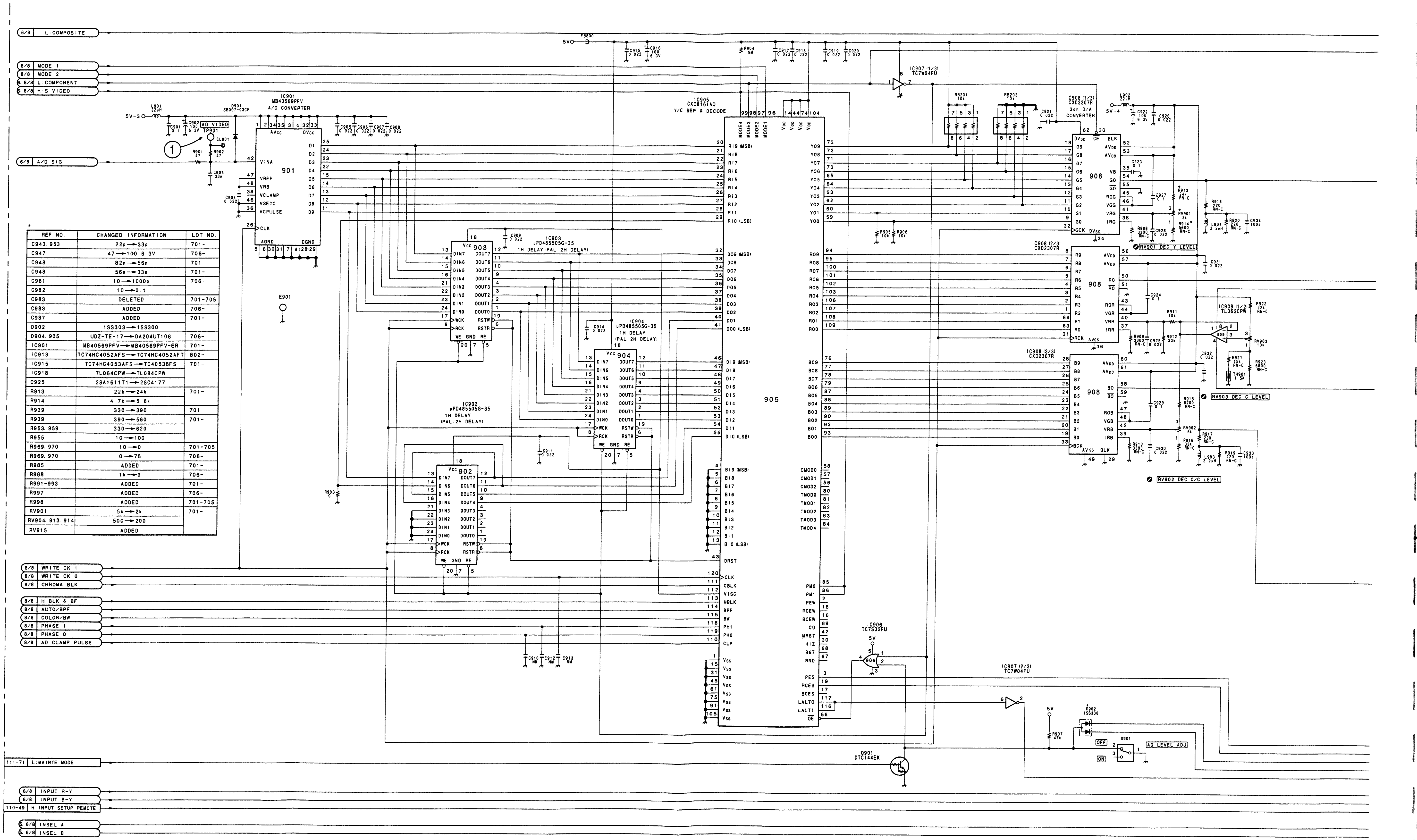

*

REF NO.	CHANGED INFORMATION	LOT NO.
C943. 953	22p → 33p	701-
C947	47 → 100 6.3V	706-
C948	82p → 56p	701
C948	56p → 33p	701-
C981	10 → 1000p	706-
C982	10 → 0.1	
C983	DELETED	701-705
C983	ADDED	706-
C987	ADDED	701-
D902	1SS303 → 1SS300	
D904. 905	UDZ-TE-17 → DA204UT106	706-
IC901	MB40569PFV → MB40569PFV-ER	701-
IC913	TC74HC4052AFS → TC74HC4052AFT	802-
IC915	TC74HC4053AFS → TC4053BFS	701-
IC918	TL064CPW → TL084CPW	
Q925	2SA1611T1 → 2SC4177	
R913	22k → 24k	701-
R914	4.7k → 5.6k	
R939	330 → 390	701
R939	390 → 560	701-
R953. 959	330 → 620	
R955	10 → 100	
R969. 970	10 → 0	701-705
R969. 970	0 → 75	706-
R985	ADDED	701-
R988	1k → 0	706-
R991-993	ADDED	701-
R997	ADDED	706-
R998	ADDED	701-705
RV901	5k → 2k	701-
RV904. 913. 914	500 → 200	
RV915	ADDED	

A | B | C | D | E | F | G | H

SONY-SP0754 / DRUCK 322

 IO-149/149A (7/8)

DSR-80/80P

DSR-80/80P

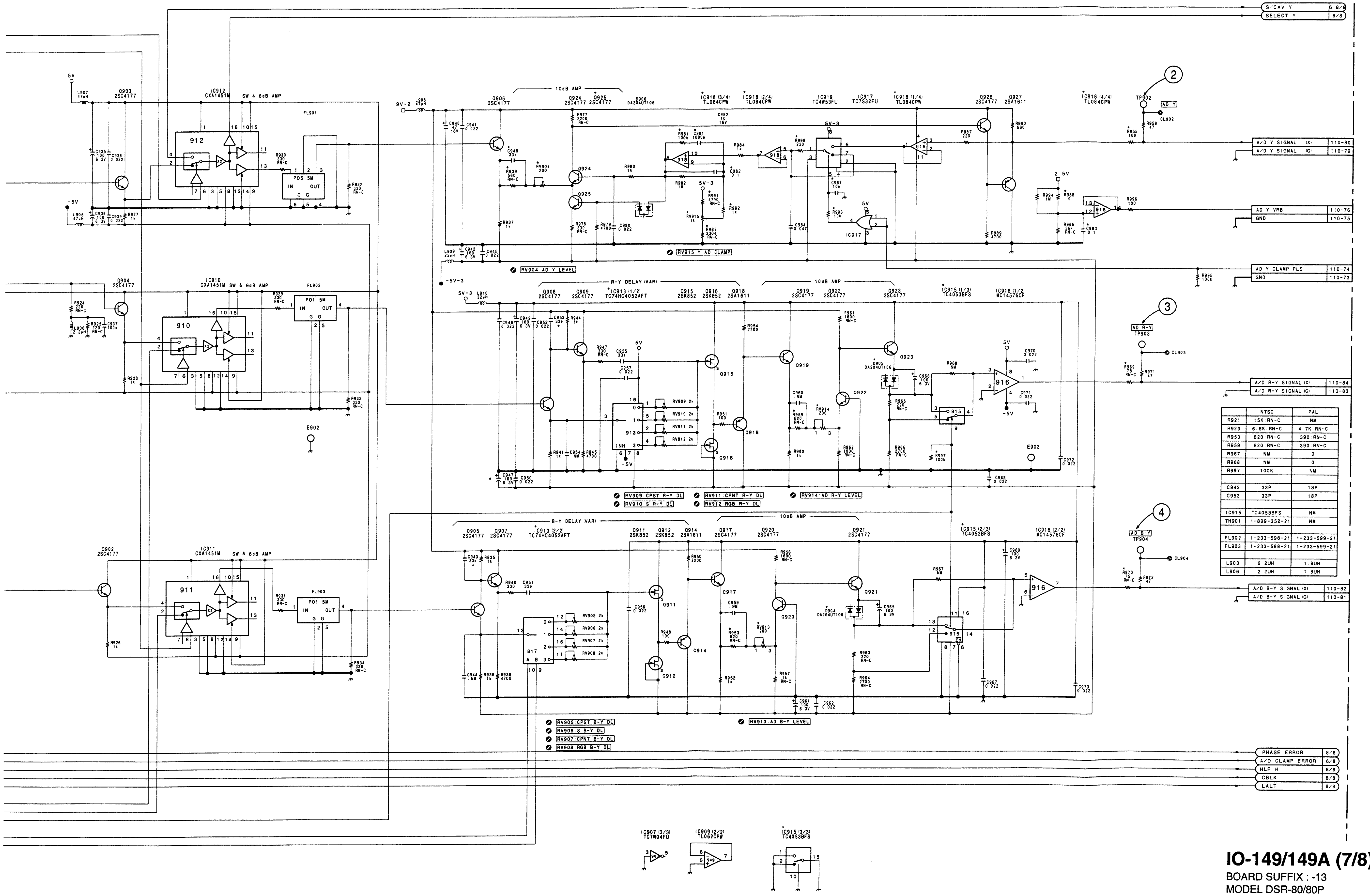

	NTSC	PAL
R921	15K : RN-C	NM
R923	6.8K : RN-C	4.7K : RN-C
R953	620 : RN-C	390 : RN-C
R959	620 : RN-C	390 : RN-C
R967	NM	0
R968	NM	0
R997	100K	NM
C943	33P	18P
C953	33P	18P
IC915	TC4053BFS	NM
TH901	1-809-352-21	NM
FL902	1-233-598-21	1-233-599-21
FL903	1-233-598-21	1-233-599-21
L903	2.2UH	1.8UH
L906	2.2UH	1.8UH

1 2 3 4 5

IO-149/149A (7/8)

BOARD SUFFIX : -13
MODEL DSR-80/80P

IO-149/149A (8/8): VIDEO ANALOG IN/OUT PROCESS (DSR-80/80P)

DSR-80/80P

DSR-80/80P

1

2

3

4

5

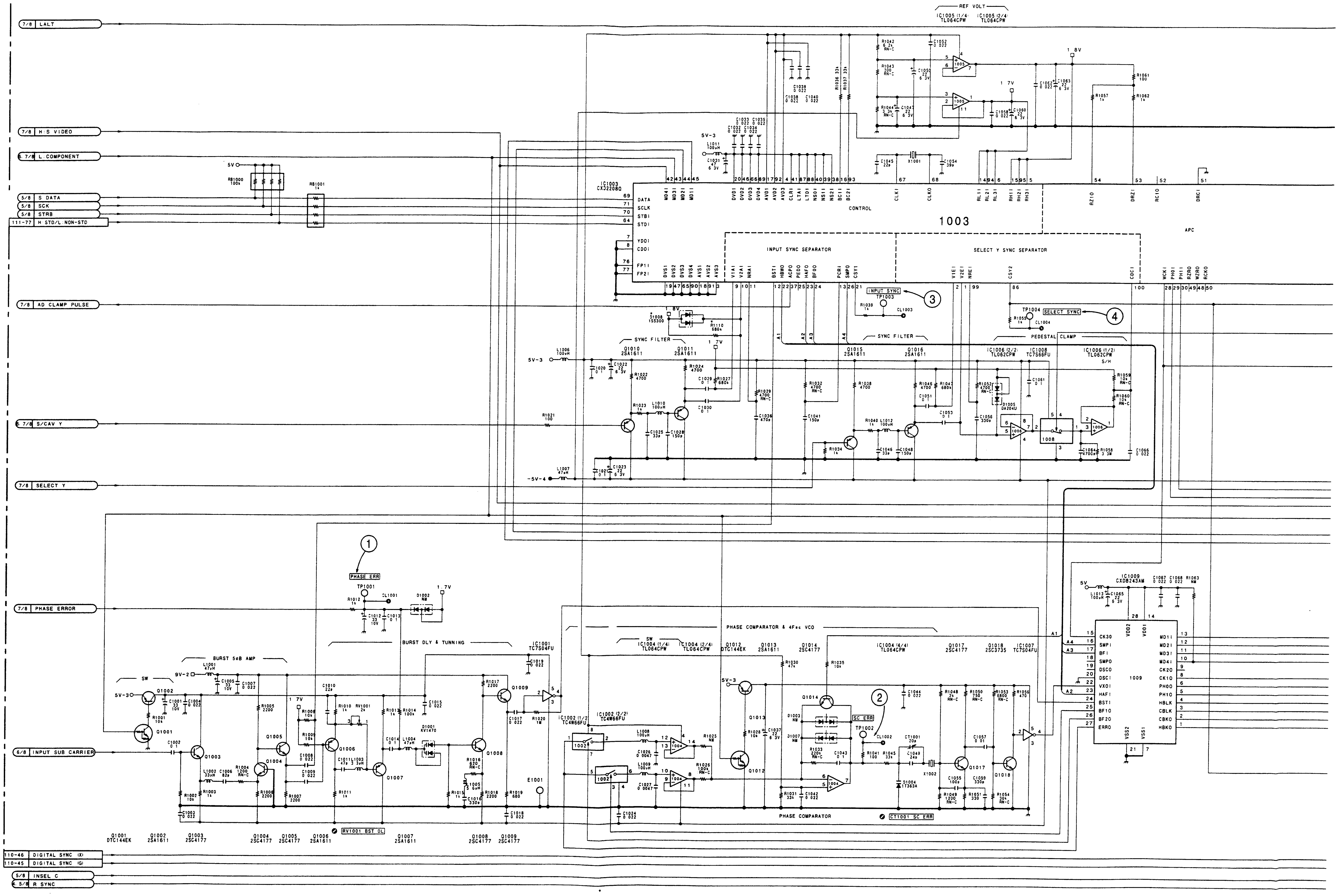

A | B | C | D | E | F | G | H

SONY-SP0754 / DRUCK 324

IO-149/149A (8/8)

DSR-80/80P

DSR-80/80P

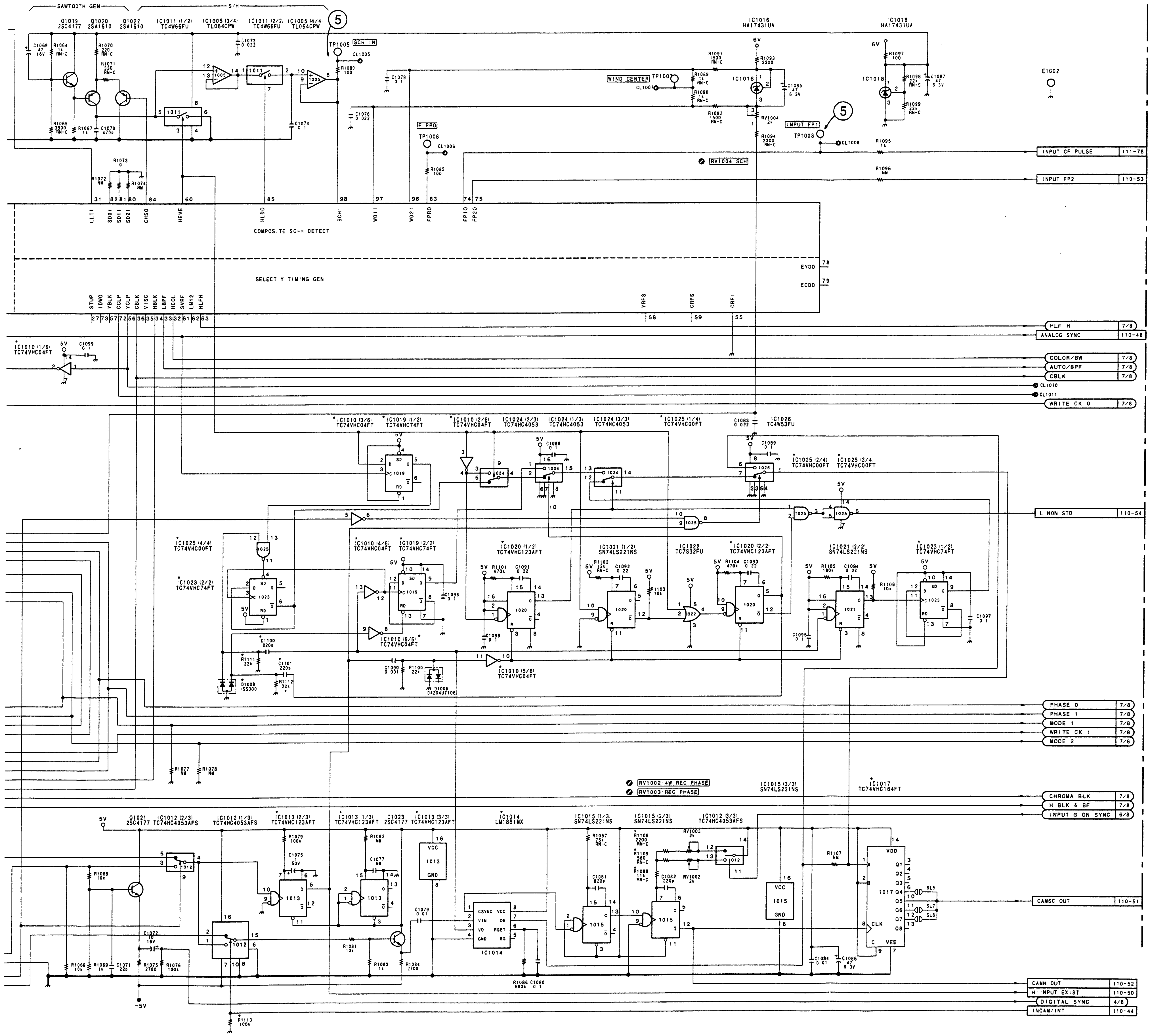

IO-149 (8/8)

① TP1001 MODE: 75% Color Bar/PB (NTSC)
③ TP1003 MODE: 75% Color Bar/PB (NTSC)

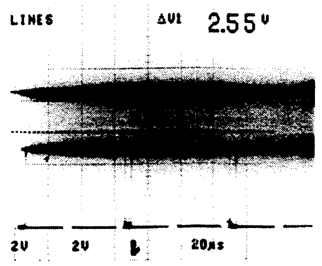

④ TP1004 MODE: 75% Color Bar/PB (NTSC)
③ TP1003 MODE: 75% Color Bar/PB (NTSC)

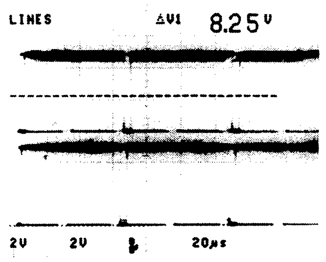

① TP1001 MODE: 100% Color Bar/PB (PAL)
③ TP1003 MODE: 100% Color Bar/PB (PAL)

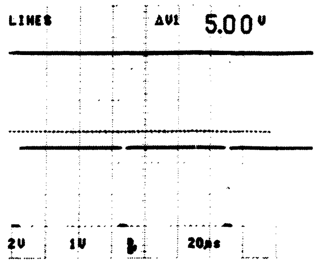

④ TP1004 MODE: 100% Color Bar/PB (PAL)
③ TP1003 MODE: 100% Color Bar/PB (PAL)

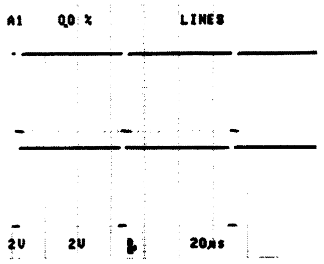

② TP1002 MODE: 75% Color Bar/PB (NTSC)
③ TP1003 MODE: 75% Color Bar/PB (NTSC)

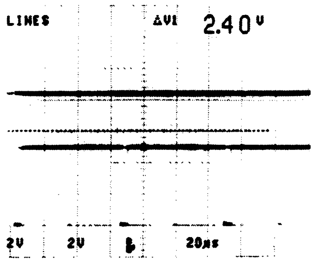

⑤ TP1005,1008 MODE: 75% Color Bar/PB (NTSC)
③ TP1003 MODE: 75% Color Bar/PB (NTSC)

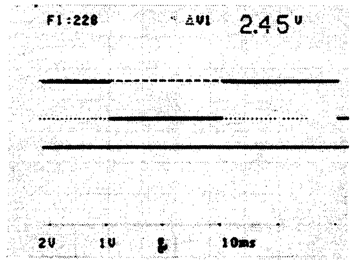

② TP1002 MODE: 100% Color Bar/PB (PAL)
③ TP1003 MODE: 100% Color Bar/PB (PAL)

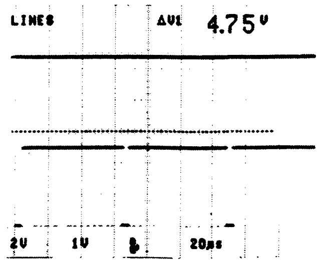

⑤ TP1005,1008 MODE: 100% Color Bar/PB (PAL)
③ TP1003 MODE: 100% Color Bar/PB (PAL)

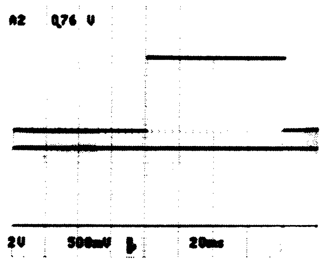

	NTSC	PAL
C1011	47P	22P
C1016	330P	220P
C1070	470P	390P
R1025	NM	330K RN-C
R1026	100K RN-C	330K RN-C
R1072	NM	0
R1077	NM	0
R1078	NM	0
R1091	1.5K RN-C	1.2K RN-C
R1092	1.5K RN-C	1.2K RN-C
X1001	1-760-109-21	1-760-183-21
X1002	1-527-722-91	1-760-457-91
D1002	NM	DA204UT106
D1003	NM	DA204UT106
D1007	NM	DA204UT106
L1004	47UH	33UH

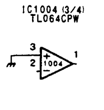

*

REF NO.	CHANGED INFORMATION	LOT NO
C1100, 1101	ADDED	706-
D1008, 1009	ADDED	
IC1010	TC74VHC164FS→TC74VHC04FT	802-
IC1013, 1020	TC74VHC175FS→TC74VHC175FT	
IC1014	LM1881M→LM1881MX	701-
IC1017	TC74VHC164FS→TC74VHC164FT	802-
IC1019, 1023	TC74VHC74FS→TC74VHC74FT	
IC1025	TC74VHC00FS→TC74VHC00FT	
R1088	12k→11k	701-801
R1108	ADDED	701-706
R1108	1.5k→2.2k	707-
R1109	ADDED	701-
R1110-1113	ADDED	706-

IO-149/149A (8/8)

BOARD SUFFIX : -13
MODEL DSR-80/80P

NY-SP0754 / DRUCK 325

KY-336/336B (1/2): KEY SWITCH/DISPLAY

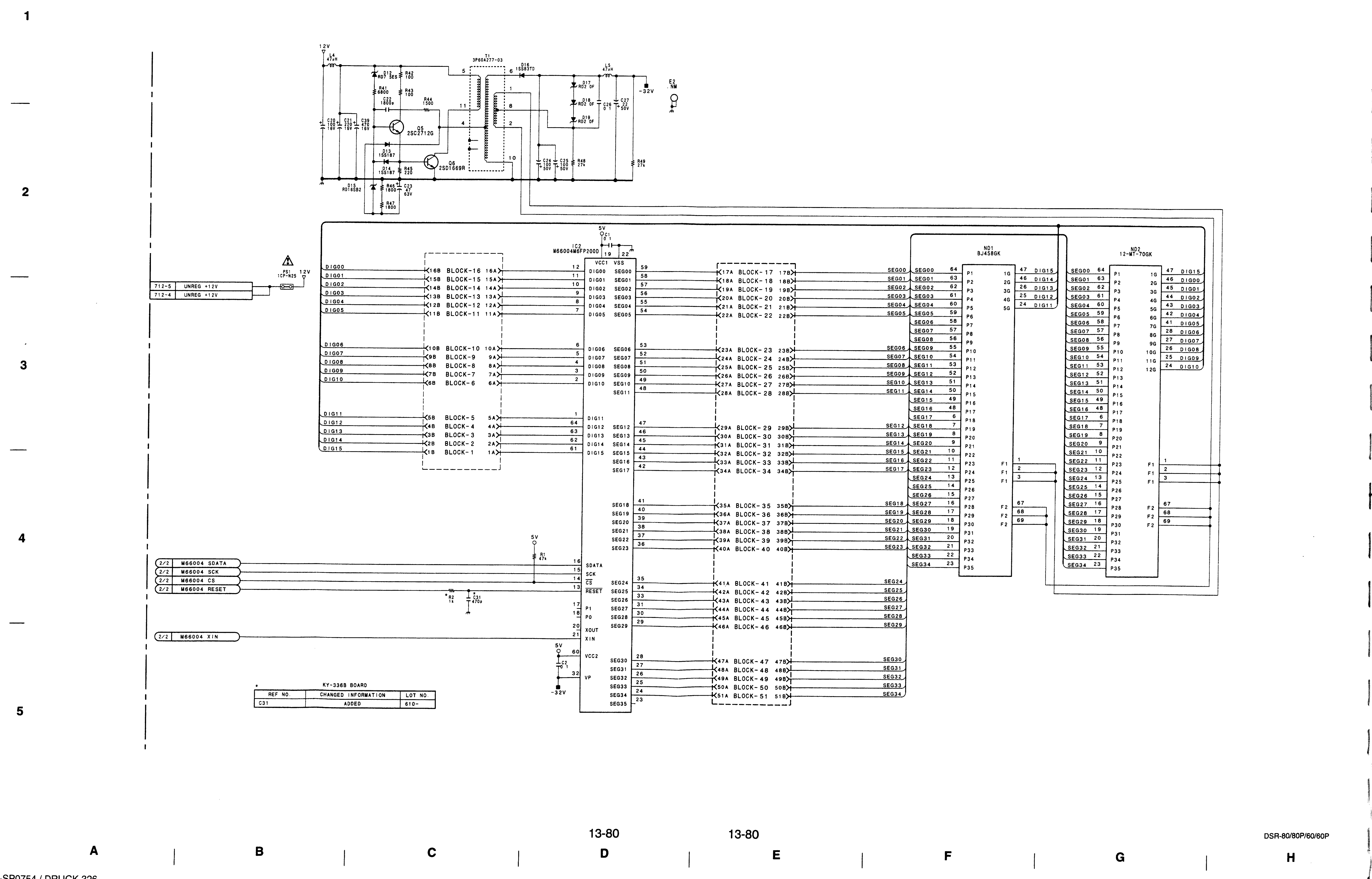

SONY-SP0754 / DRUCK 326

 KY-336/336B (1/2)

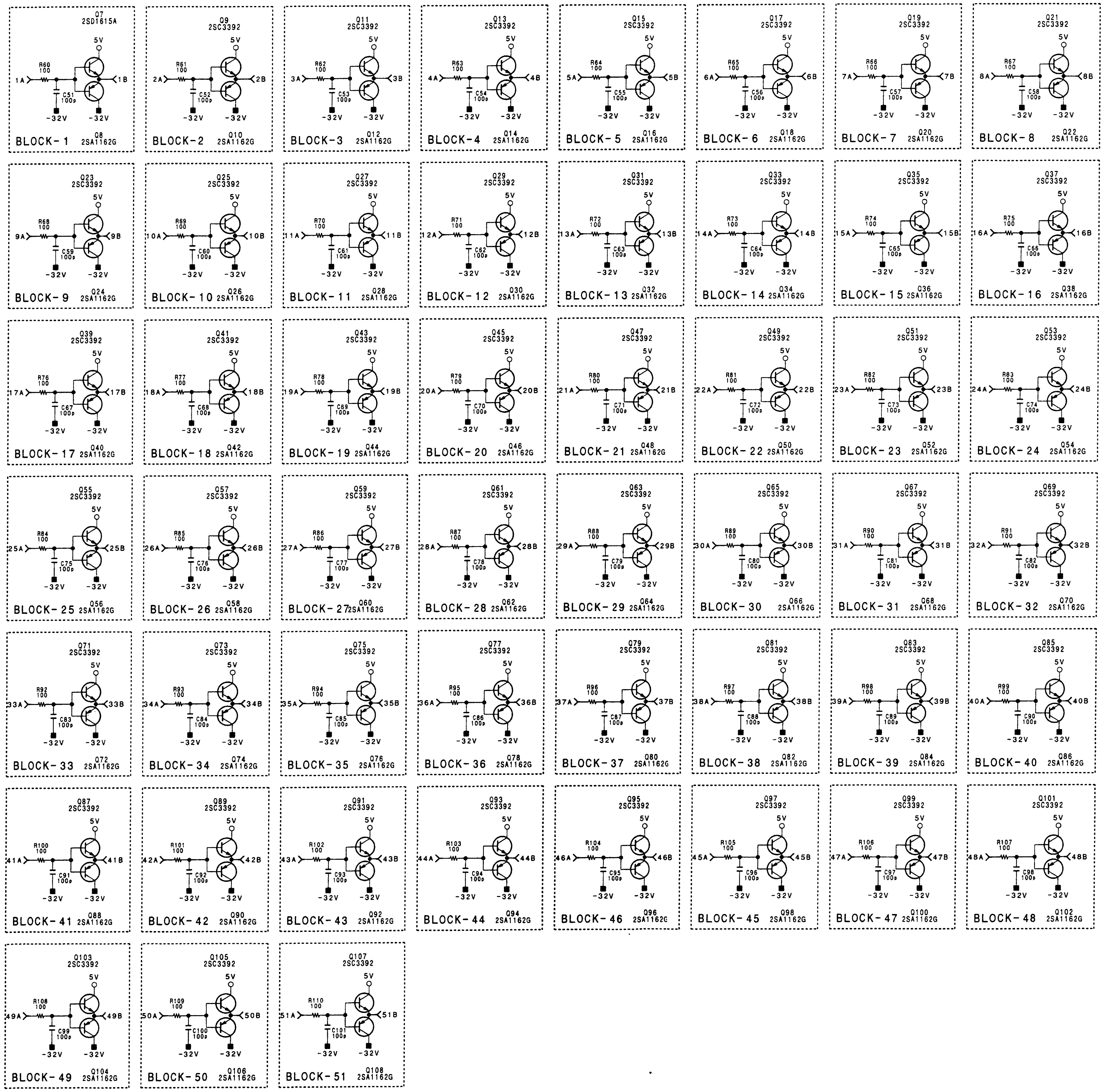

	DSR-80/80P	DSR-60/60P
C8	0 1μ	NO MOUNT
C9	0.1μ	NO MOUNT
C10	0.1μ	NO MOUNT
C11	0.1μ	NO MOUNT
R35	120Ω	NO MOUNT
RV1	20k	NO MOUNT
RV2	20k	NO MOUNT
RV3	20k	NO MOUNT
RV4	20k	NO MOUNT
S6	1-692-891-21	NO MOUNT
S7	1-571-977-21	NO MOUNT
S8	1-571-977-21	NO MOUNT
S9	1-571-977-21	NO MOUNT
S10	1-571-977-21	NO MOUNT
S13	1-571-977-21	NO MOUNT
D9	ISS300	NO MOUNT
D10	ISS300	NO MOUNT
D21	UDZ-TE-17-6.2B	NO MOUNT
D22	UDZ-TE-17-6.2B	NO MOUNT
D23	UDZ-TE-17-6.2B	NO MOUNT
D24	UDZ-TE-17-6.2B	NO MOUNT

1 – 2 – 3 – 4 – 5

KY-336/336B (1/2)
MODEL DSR-80/80P/60/60P

KY-336/336B (2/2): KEY SWITCH/DISPLAY

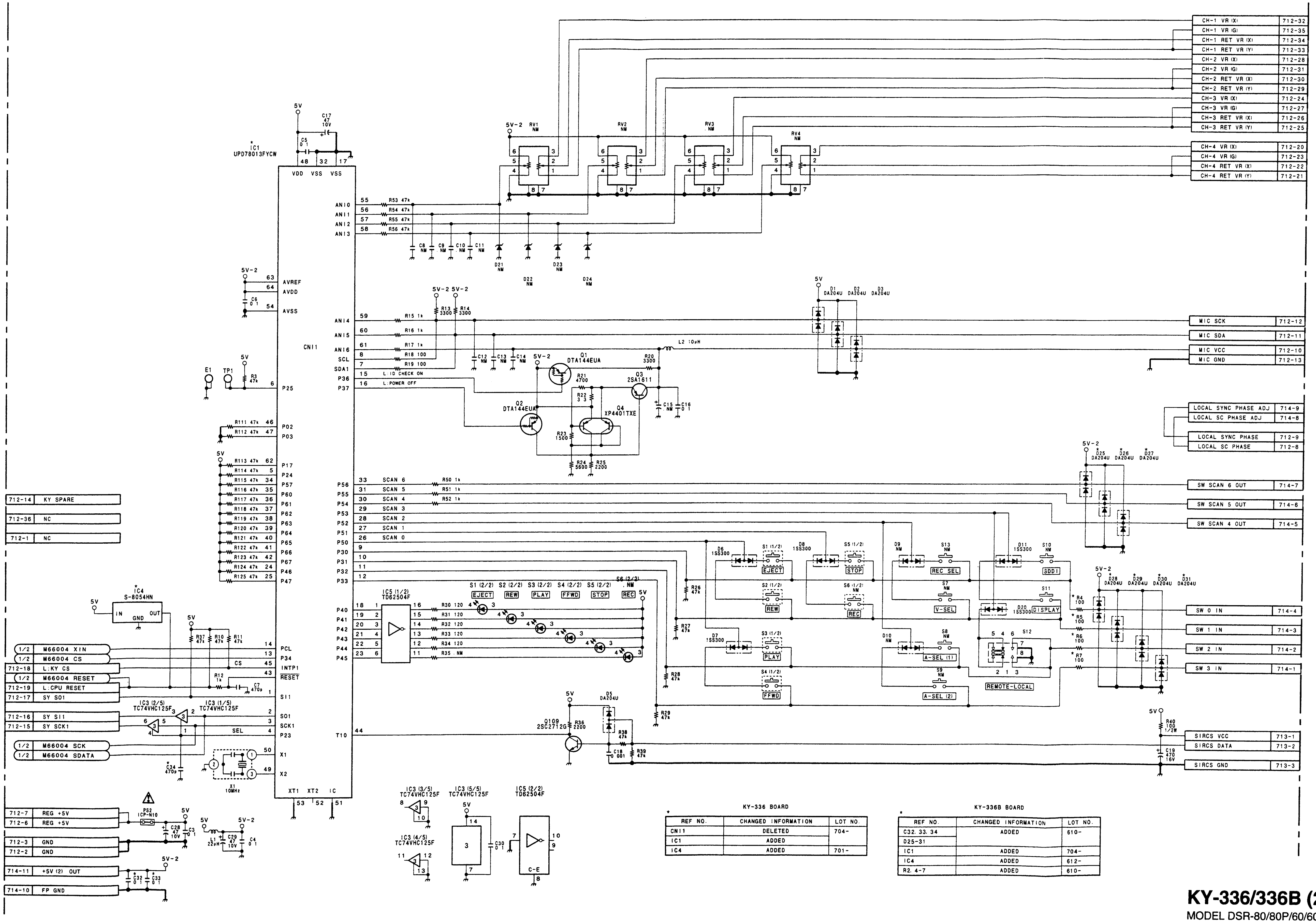

KY-336 BOARD

REF NO.	CHANGED INFORMATION	LOT NO.
CN11	DELETED	704-
IC1	ADDED	
IC4	ADDED	701-

KY-336B BOARD

REF NO.	CHANGED INFORMATION	LOT NO.
C32, 33, 34	ADDED	610-
D25-31		
IC1	ADDED	704-
IC4	ADDED	612-
R2, 4-7	ADDED	610-

KY-336/336B (2/2)

MODEL DSR-80/80P/60/60P

MS-43 (1/2): DRUM/CAPSTAN DRIVE MECHA SENSOR

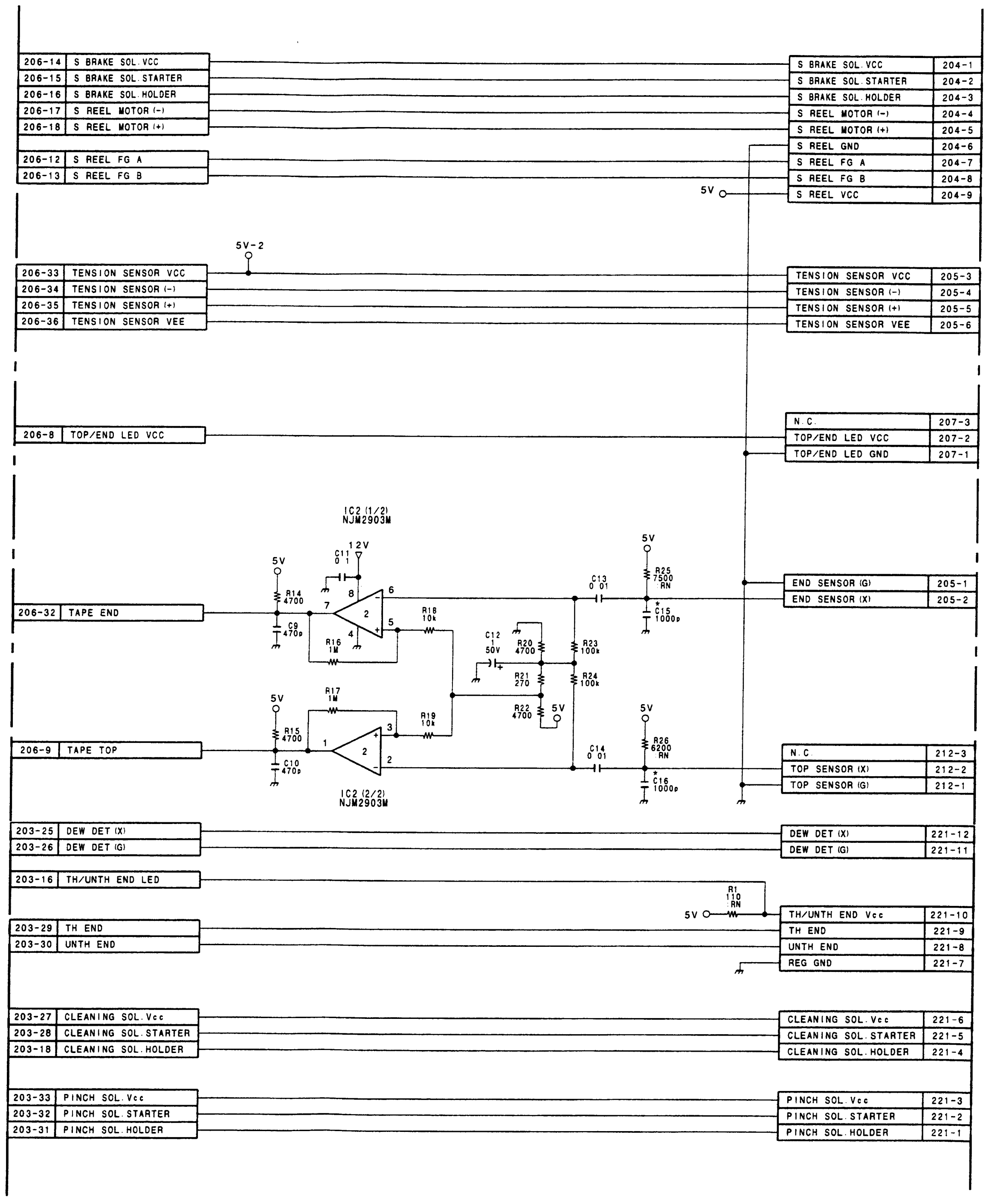

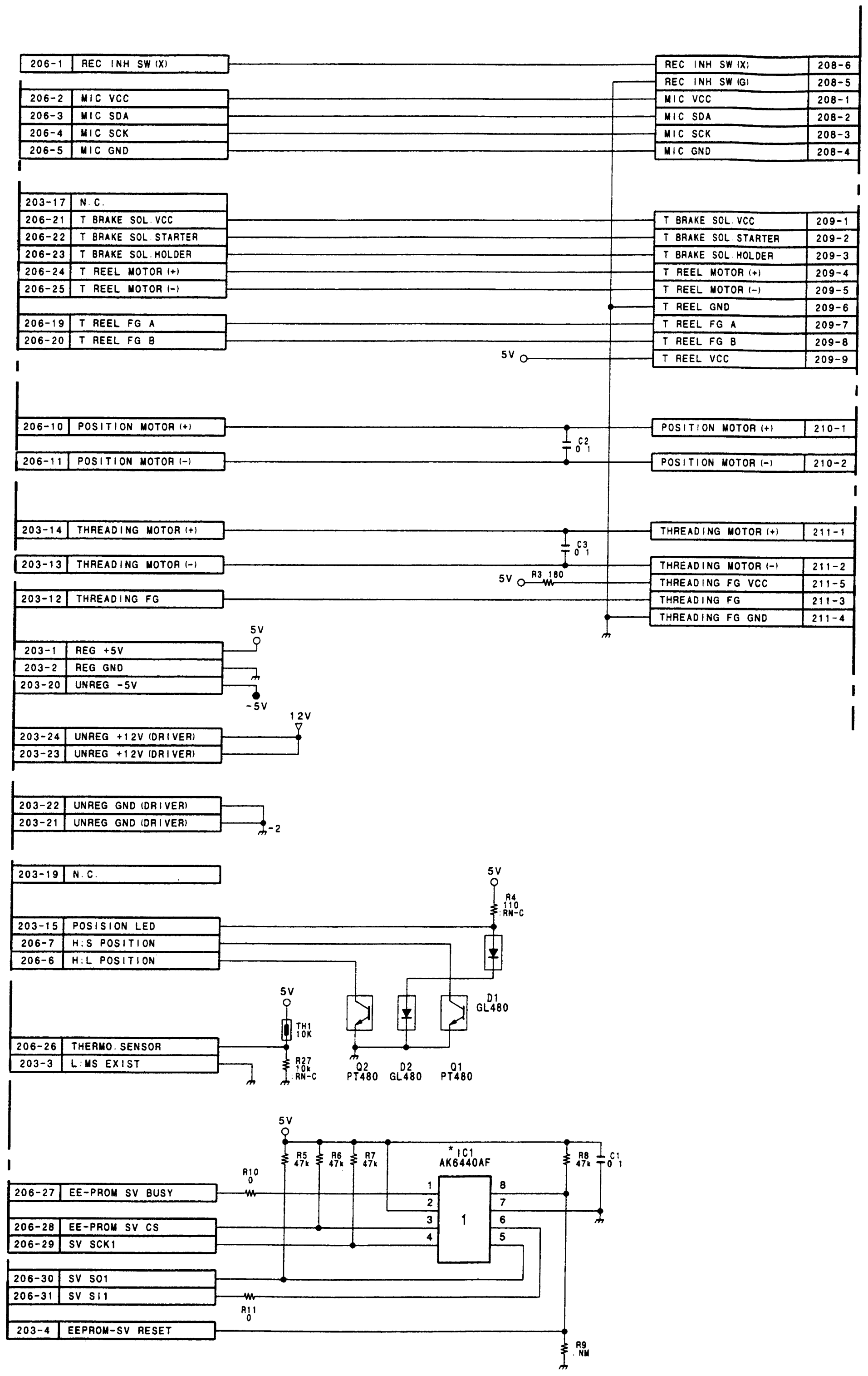

*

REF NO.	CHANGED INFORMATION	LOT NO.
C15, 16	47p → 1000p	611-
IC1	AK6440HF → AK6440AF	

MS-43 (1/2)
MODEL DSR-80/80P/60/60P

MS-43 (2/2): DRUM/CAPSTAN DRIVE MECHA SENSOR

1

2

3

4

5

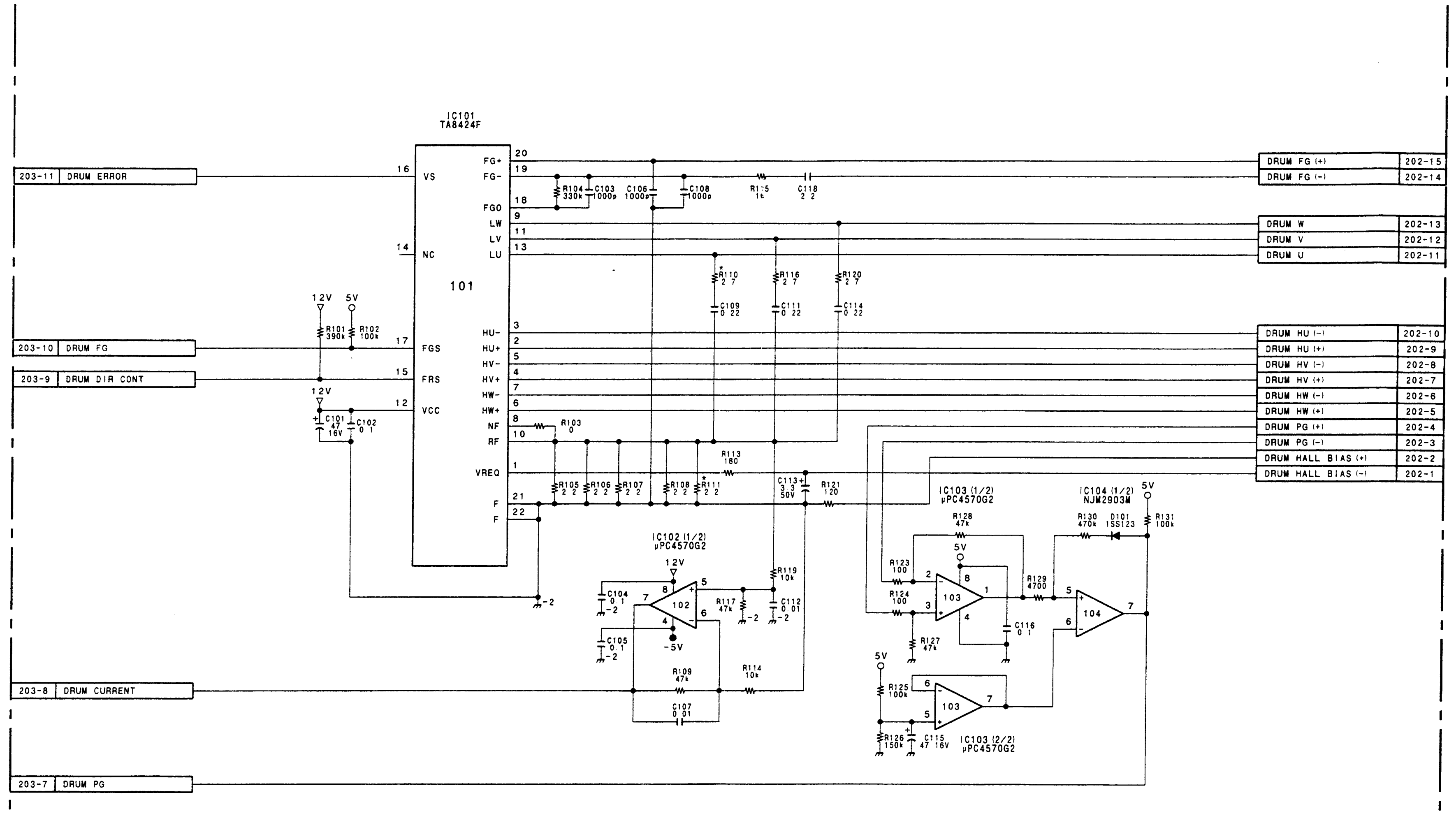

*

REF NO.	CHANGED INFORMATION	LOT NO.
R110	2.2 → 2.7	610-
R111	2.7 → 2.2	

PRE-34 (1/3): REC/PB DIGITAL PROCESS

DSR-80/80P

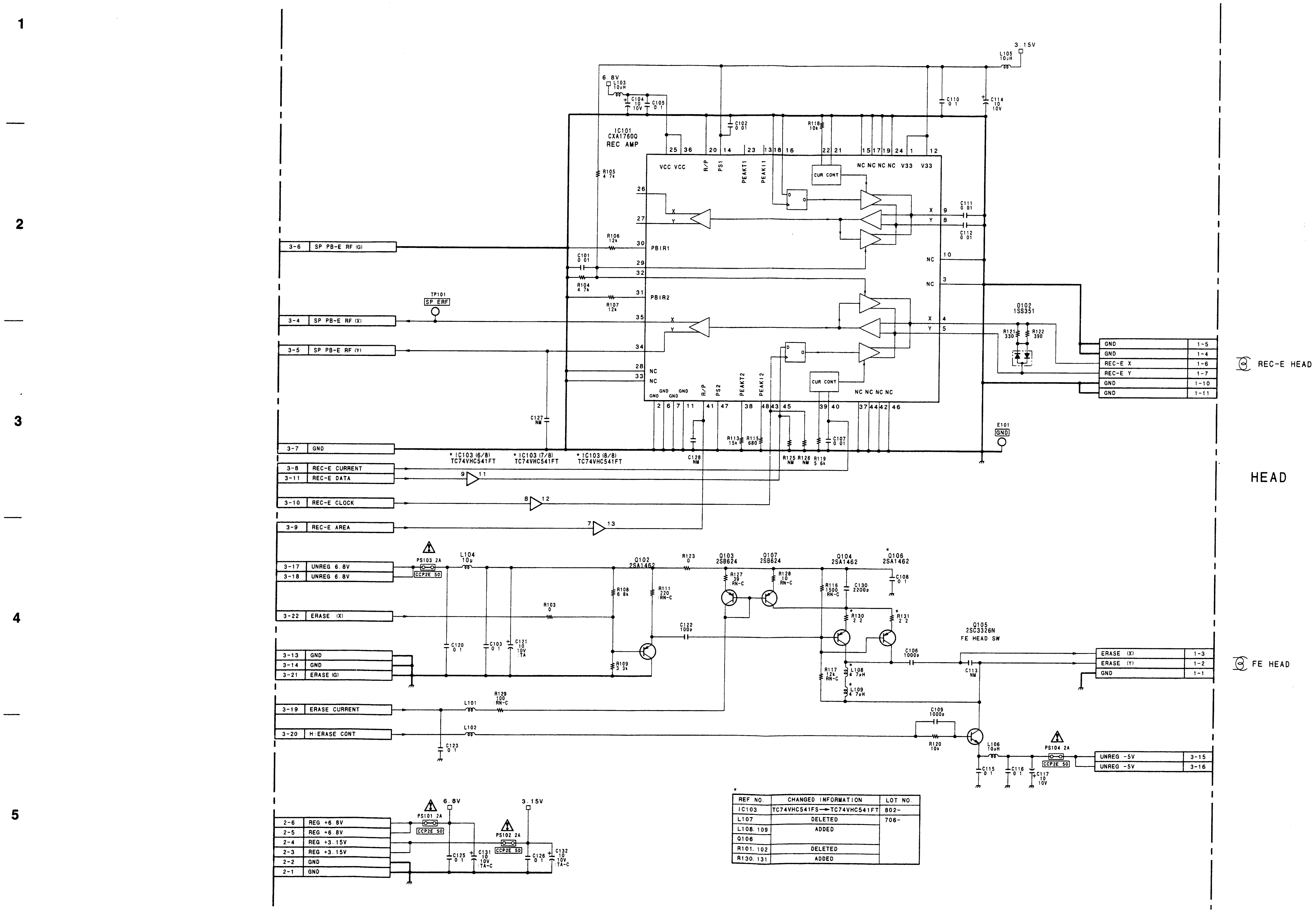

*

REF NO.	CHANGED INFORMATION	LOT NO.
IC103	TC74VHC541FS→TC74VHC541FT	802-
L107	DELETED	706-
L108. 109	ADDED	
Q106		
R101. 102	DELETED	
R130. 131	ADDED	

PRE-34 (1/3)
BOARD SUFFIX : -13
MODEL DSR-80/80P

A | B | C | D | E | F | G | H

PRE-34 (2/3): REC/PB DIGITAL PROCESS

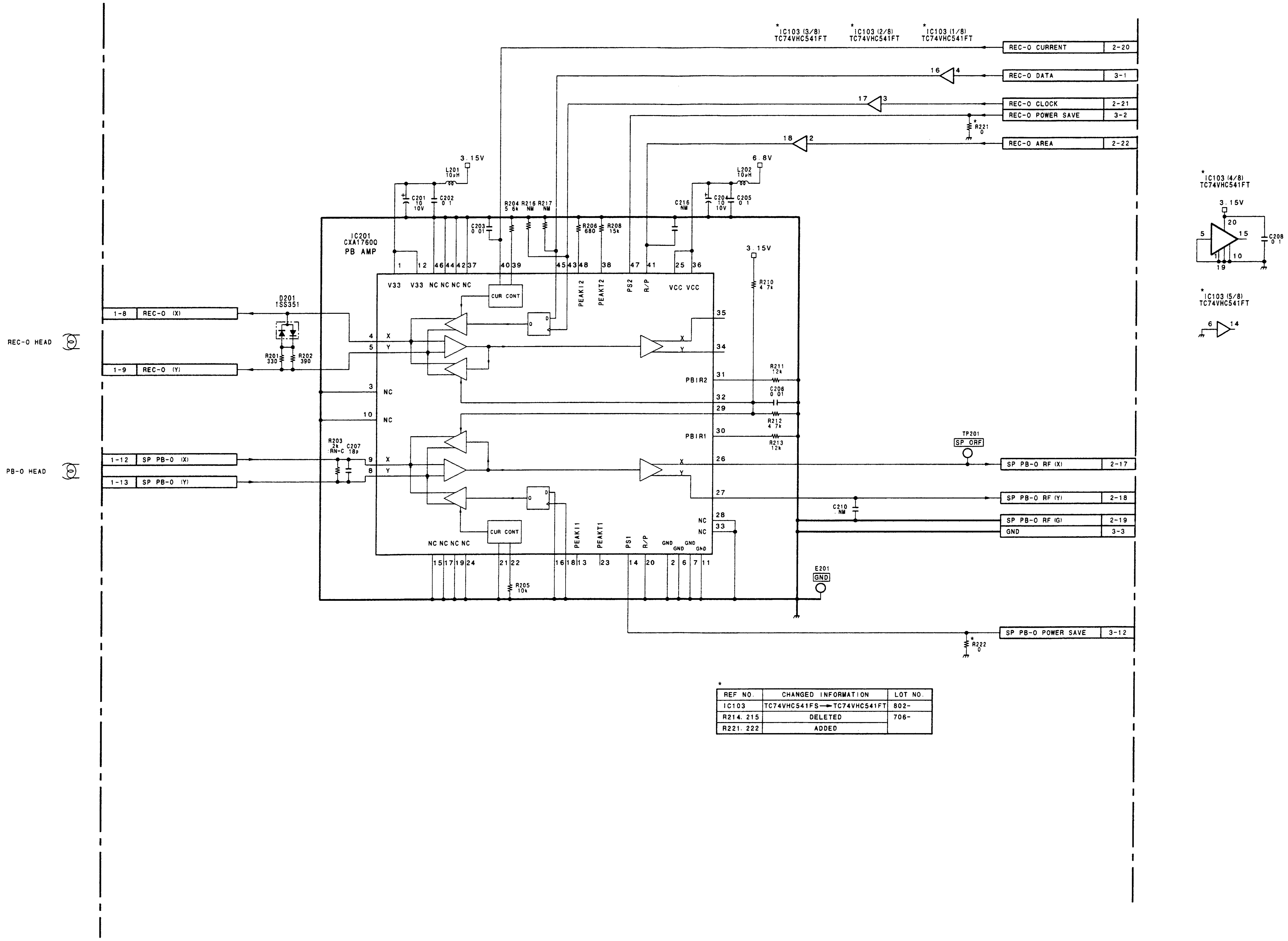

*

REF NO.	CHANGED INFORMATION	LOT NO.
IC103	TC74VHC541FS → TC74VHC541FT	802-
R214. 215	DELETED	706-
R221. 222	ADDED	

PRE-34 (2/3)
BOARD SUFFIX : -11
MODEL DSR-80/80P

PRE-34 (3/3): REC/PB DIGITAL PROCESS

DSR-80/80P

1

2

3

4

5

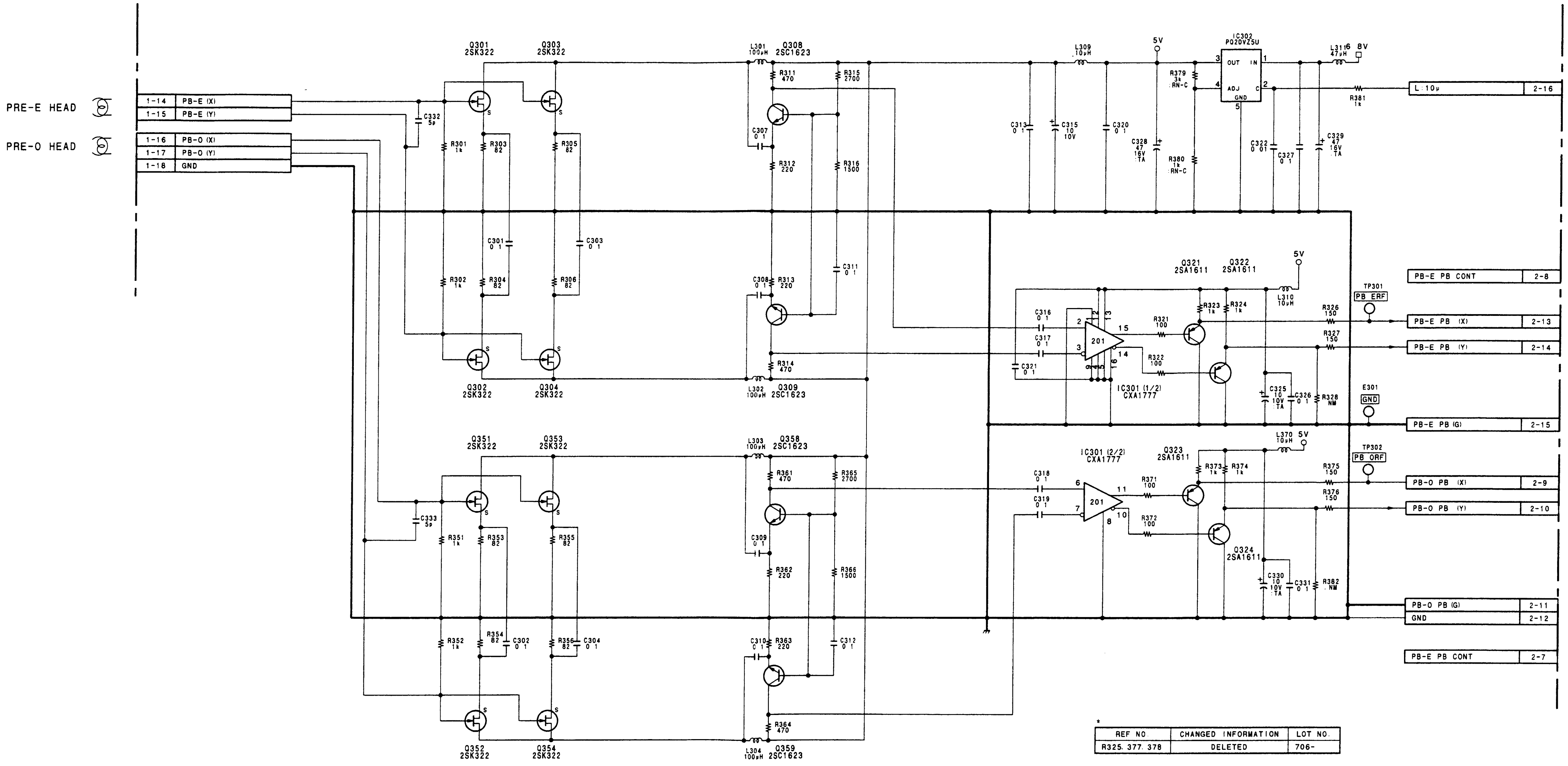

REF NO	CHANGED INFORMATION	LOT NO.
R325, 377, 378	DELETED	706-

PRE-34 (3/3)
BOARD SUFFIX : -13
MODEL DSR-80/80P

DSR-80/80P

A | B | C | D | E | F | G | H

PRE-34 (1/3): REC/PB DIGITAL PROCESS

DSR-80/80P

1

2

3

4

5

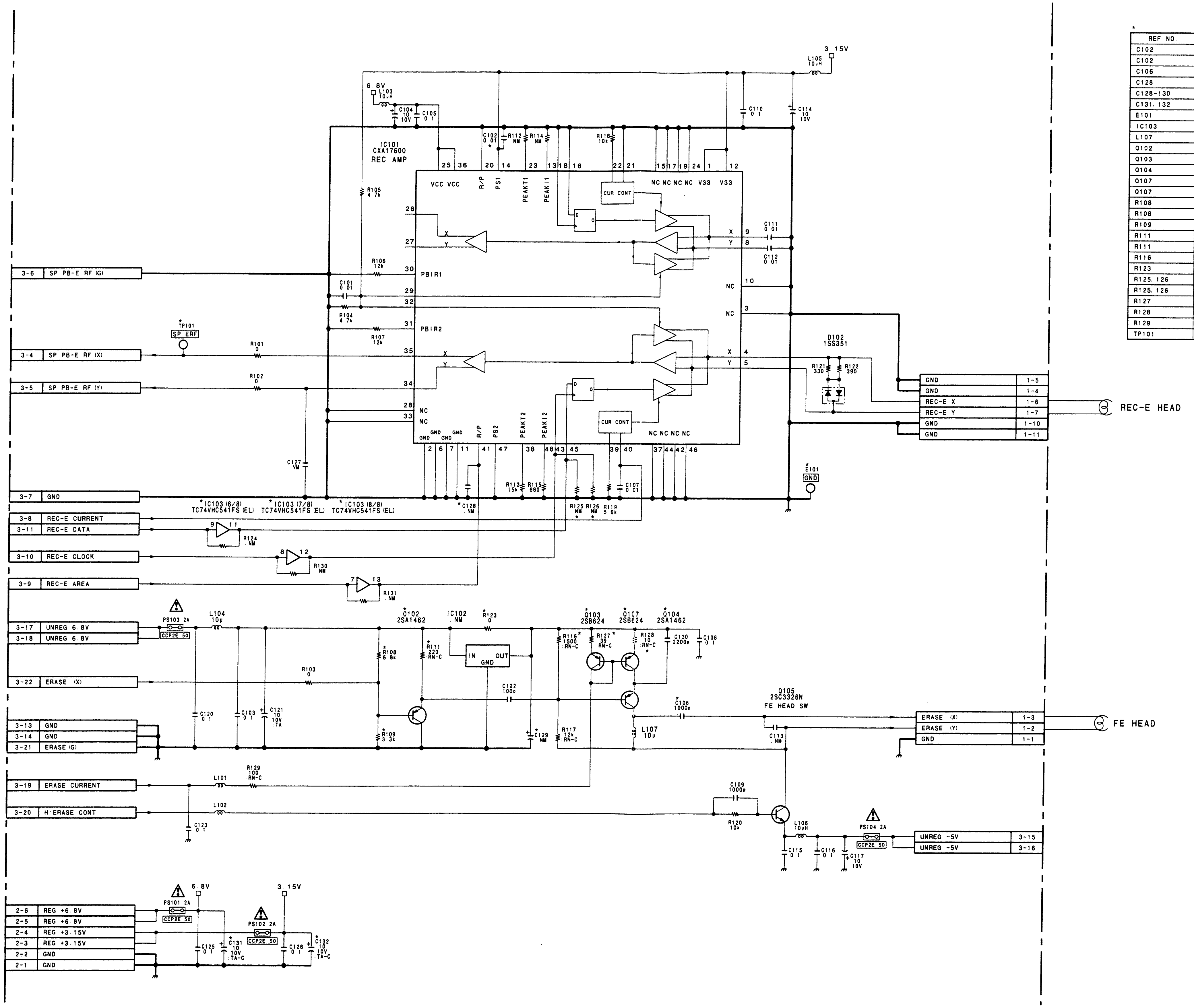

*

REF NO.	CHANGED INFORMATION	LOT NO.
C102	DELETED	701
C102	ADDED	702-
C106	ADDED	701-
C128	ADDED	701
C128-130	DELETED	702-
C131. 132	ADDED	
E101	ADDED	701-
IC103	ADDED	
L107	ADDED	
Q102	2SA1226→2SA1462	702-
Q103	FMS1-T→2SB624	
Q104	2SA1226→2SA1462	701-
Q107	ADDED	
Q107	FMS1-T→2SB624	702-
R108	10k→3.9k	701
R108	3.9k→6.8k	702-
R109	10k→3.3k	701-
R111	220→120	701
R111	120→220	702-
R116	1k→1.5k	701-
R123	ADDED	702-
R125. 126	ADDED	701
R125. 126	DELETED	702-
R127	ADDED	
R128	ADDED	
R129	470→100	
TP101	ADDED	701-

PRE-34 (1/3)
BOARD SUFFIX : -11, 12
MODEL DSR-80/80P

A | B | C | D | E | F | G | H

SONY-SP0754 / DRUCK 336

PRE-34 (2/3): REC/PB DIGITAL PROCESS

DSR-80/80P

1

–

2

–

3

–

4

–

5

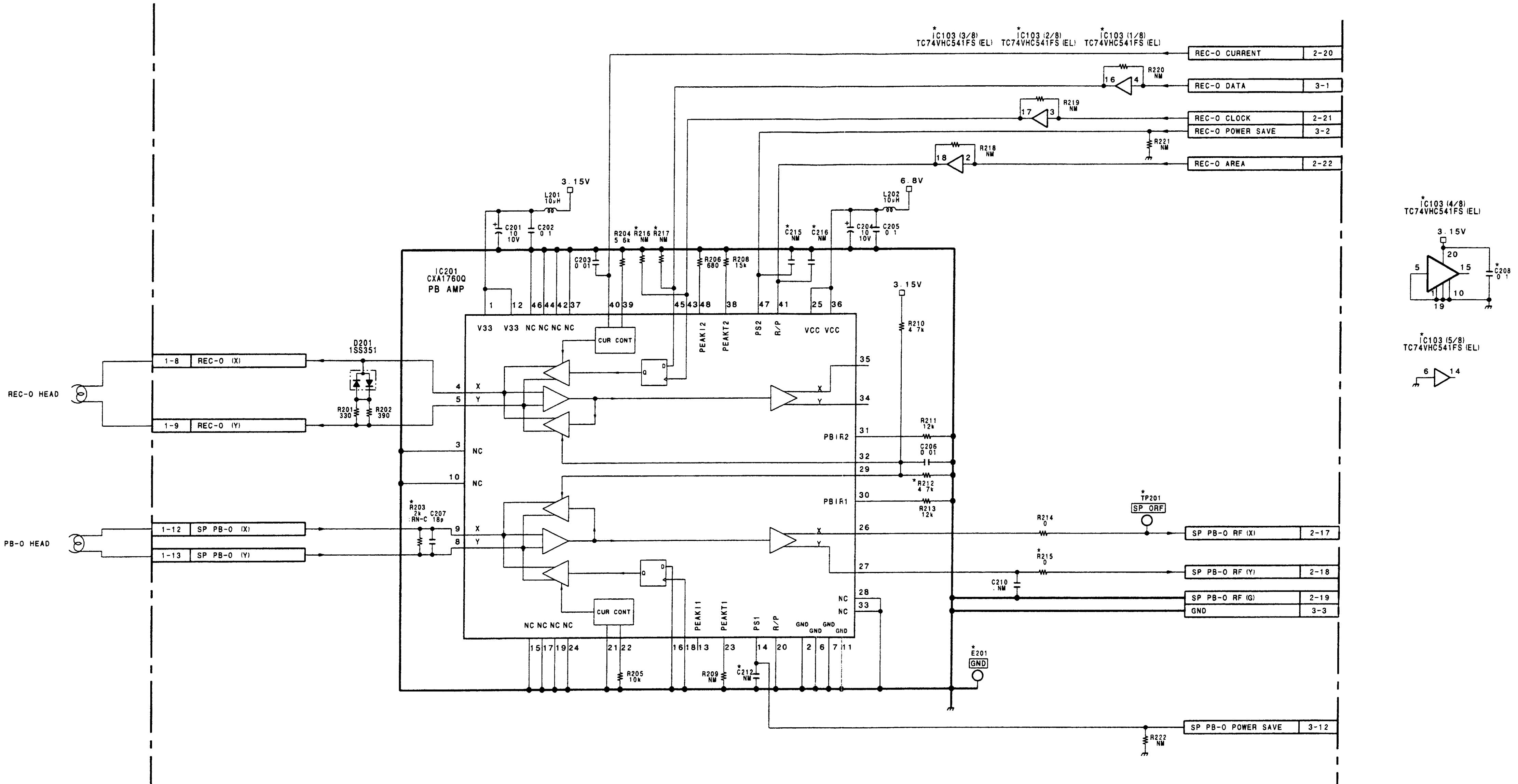

*

REF NO.	CHANGED INFORMATION	LOT NO.
C208	ADDED	702-
C212, 215, 216	ADDED	701-
E210	ADDED	
IC103	ADDED	702-
R203	1.5k → 2k	
R216, 217	ADDED	701
R216, 217	DELETED	702-
TP201	ADDED	701-

PRE-34 (2/3)
BOARD SUFFIX : -11, 12
MODEL DSR-80/80P

PRE-34 (3/3): REC/PB DIGITAL PROCESS

DSR-80/80P

1

2

3

4

5

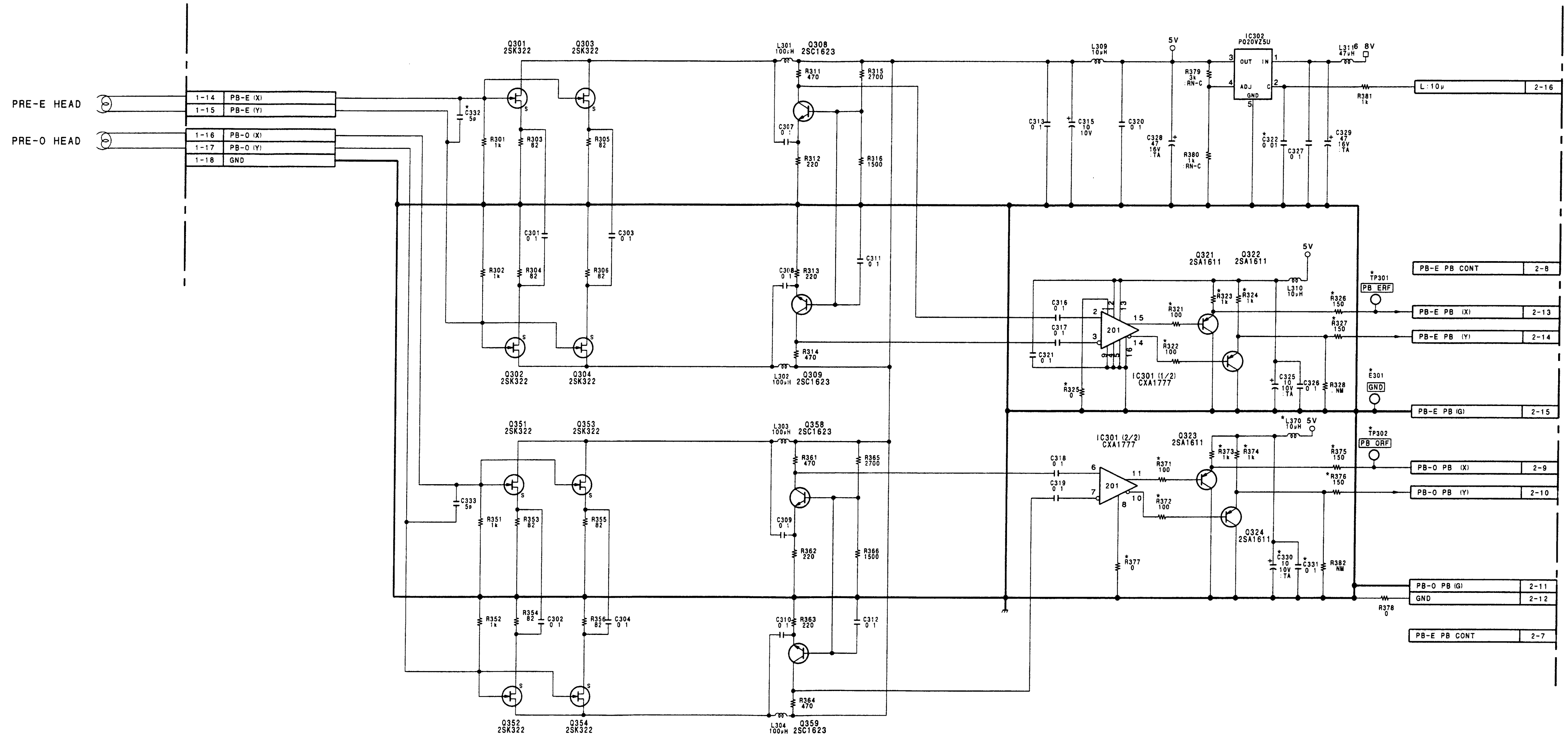

*

REF NO.	CHANGED INFORMATION	LOT NO.
C330. 331	ADDED	702-
C322	1000p→0.01	701-
E301	ADDED	
L370	ADDED	702-
R321. 322. 371. 372	47→100	701-
R323. 324. 373. 374	470→1k	
R325. 377	1k→0	
R326. 327. 375. 376	22→150	
TP301. 302	ADDED	

PRE-34 (3/3)

BOARD SUFFIX : -11, 12
MODEL DSR-80/80P

A | B | C | D | E | F | G | H

SONY-SP0754 / DRUCK 338

PRE-39: PB DIGITAL PROCESS

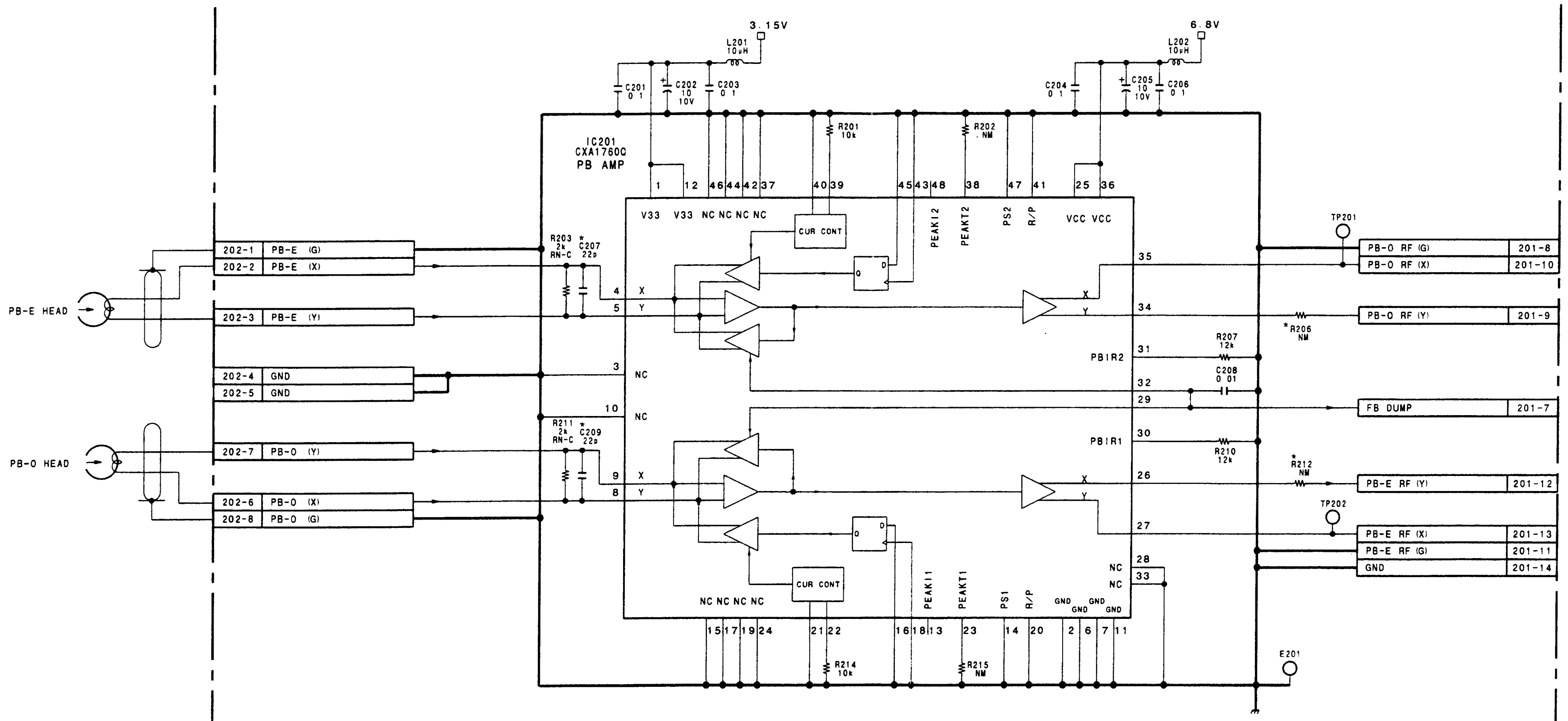

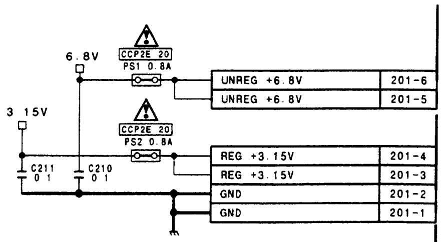

*

REF NO.	CHANGED INFORMATION	LOT NO.
C207, 209	10p → 22p	610-
R206, 212	DELETED	

PRE-39
MODEL DSR-60/60P

RP-101 (1/7): REC/PB HEAD AMP, RF A/D

DSR-80/80P

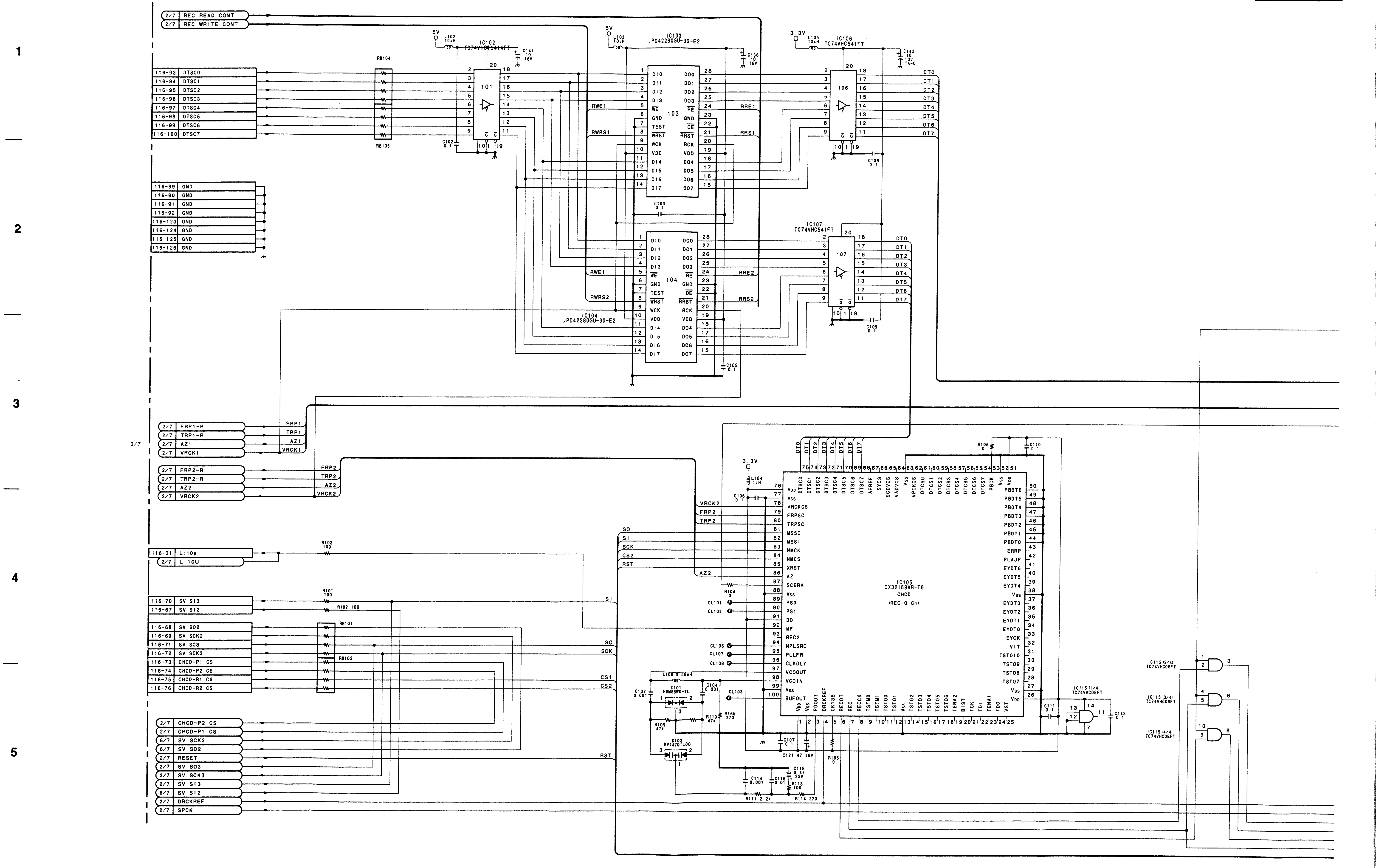

A | B | C | D | E | F | G | H

SONY-SP0754 / DRUCK 340

DSR-80/80P

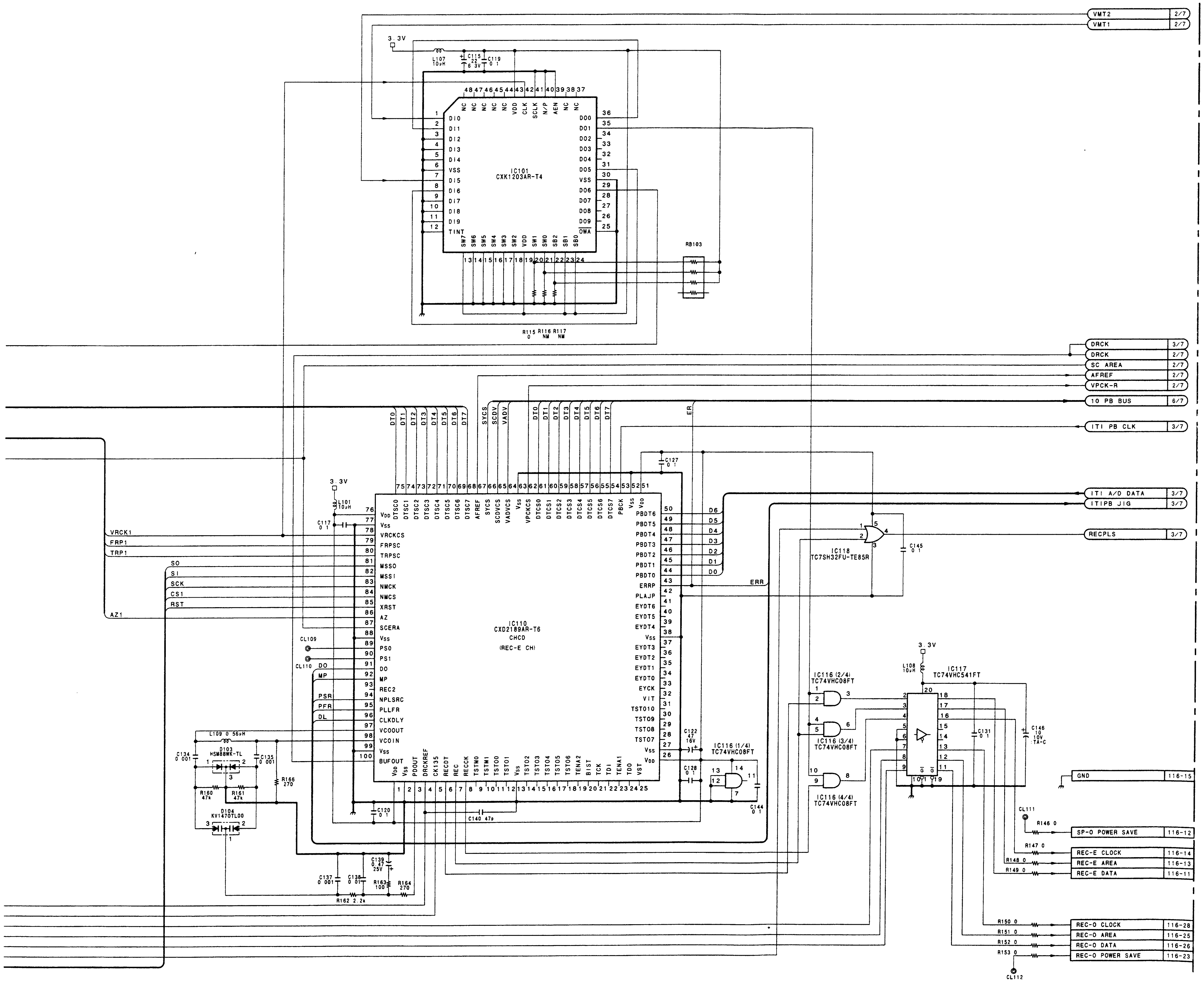

RP-101 (1/7)

BOARD SUFFIX : -14
MODEL DSR-80/80P

RP-101 (2/7): REC/PB HEAD AMP, RF A/D

DSR-80/80P

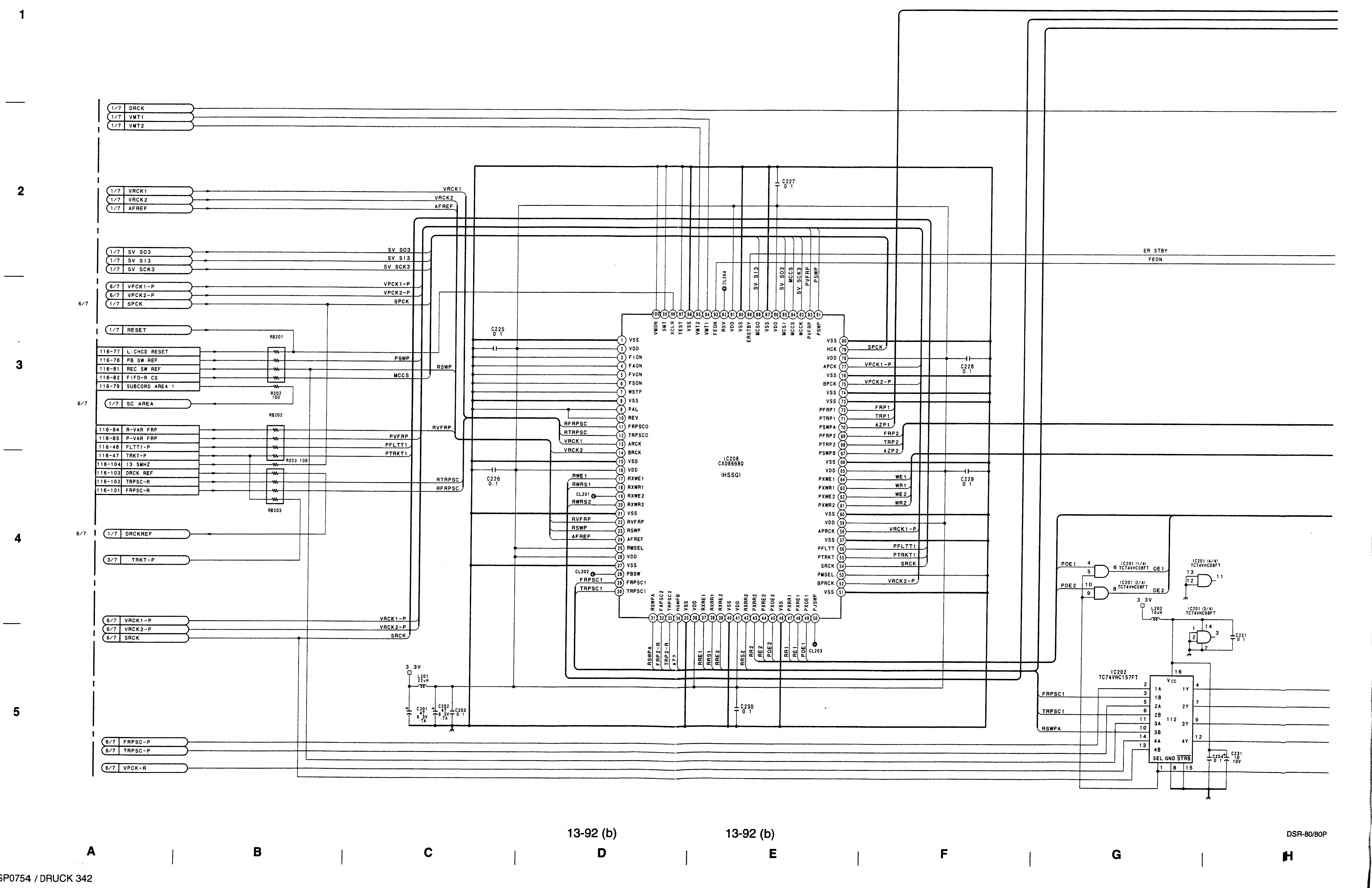

SONY-SP0754 / DRUCK 342

DSR-80/80P

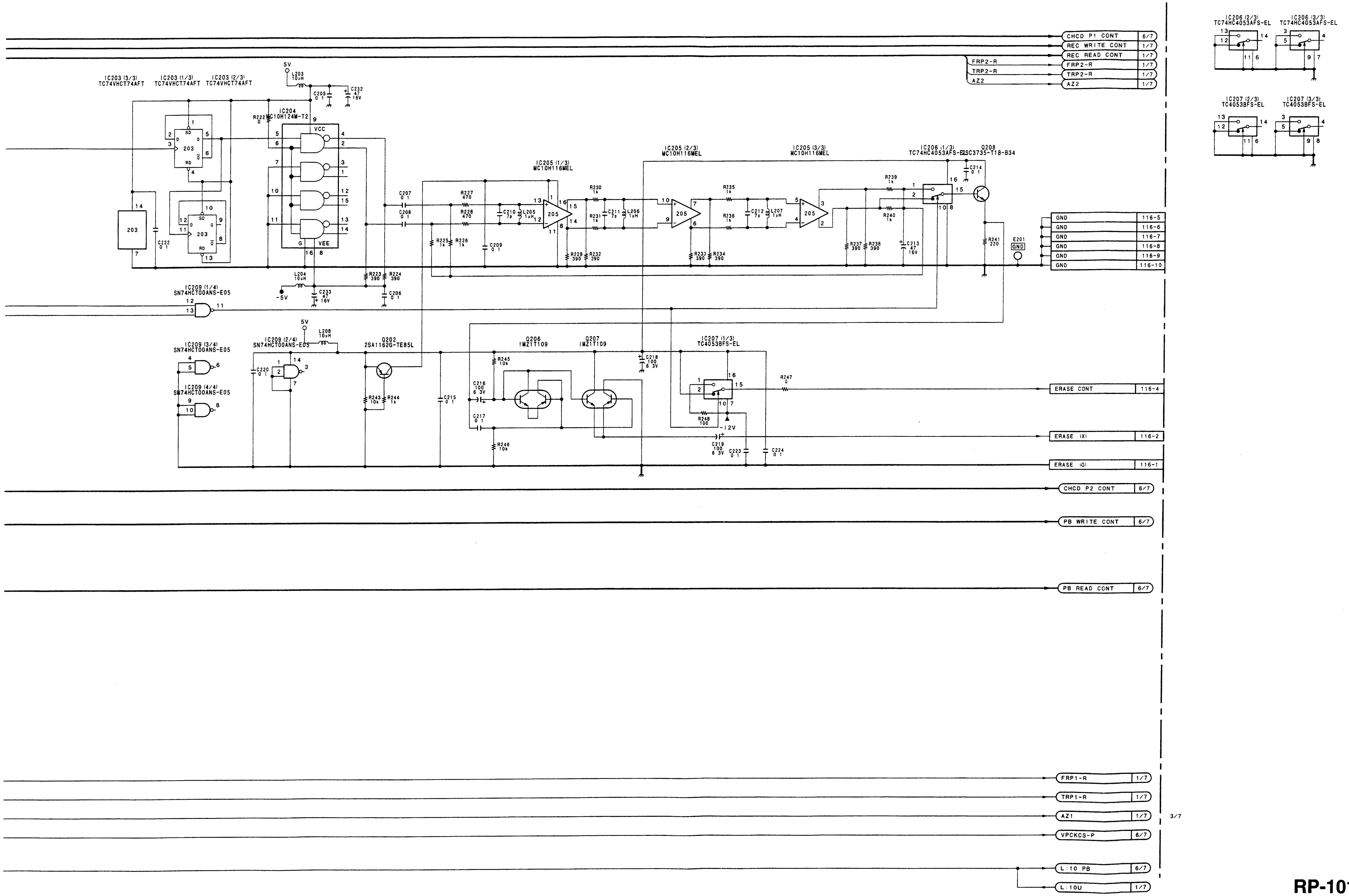

1

2

3

4

5

RP-101 (2/7)
BOARD SUFFIX : -14
MODEL DSR-80/80P

DSR-80/80P

RP-101 (3/7): REC/PB HEAD AMP, RF A/D

RP-101 (3/7)

1 ① TP301 (MODE: 75% Color Bar/PB (NTSC))
② TP303 (MODE: 100% Color Bar/PB (PAL))

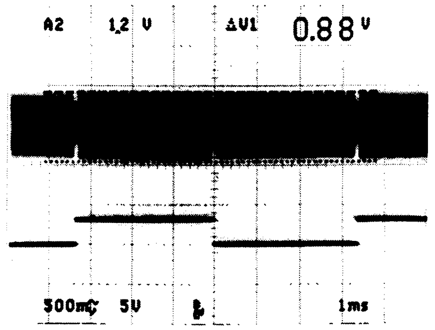

2

3

4

5

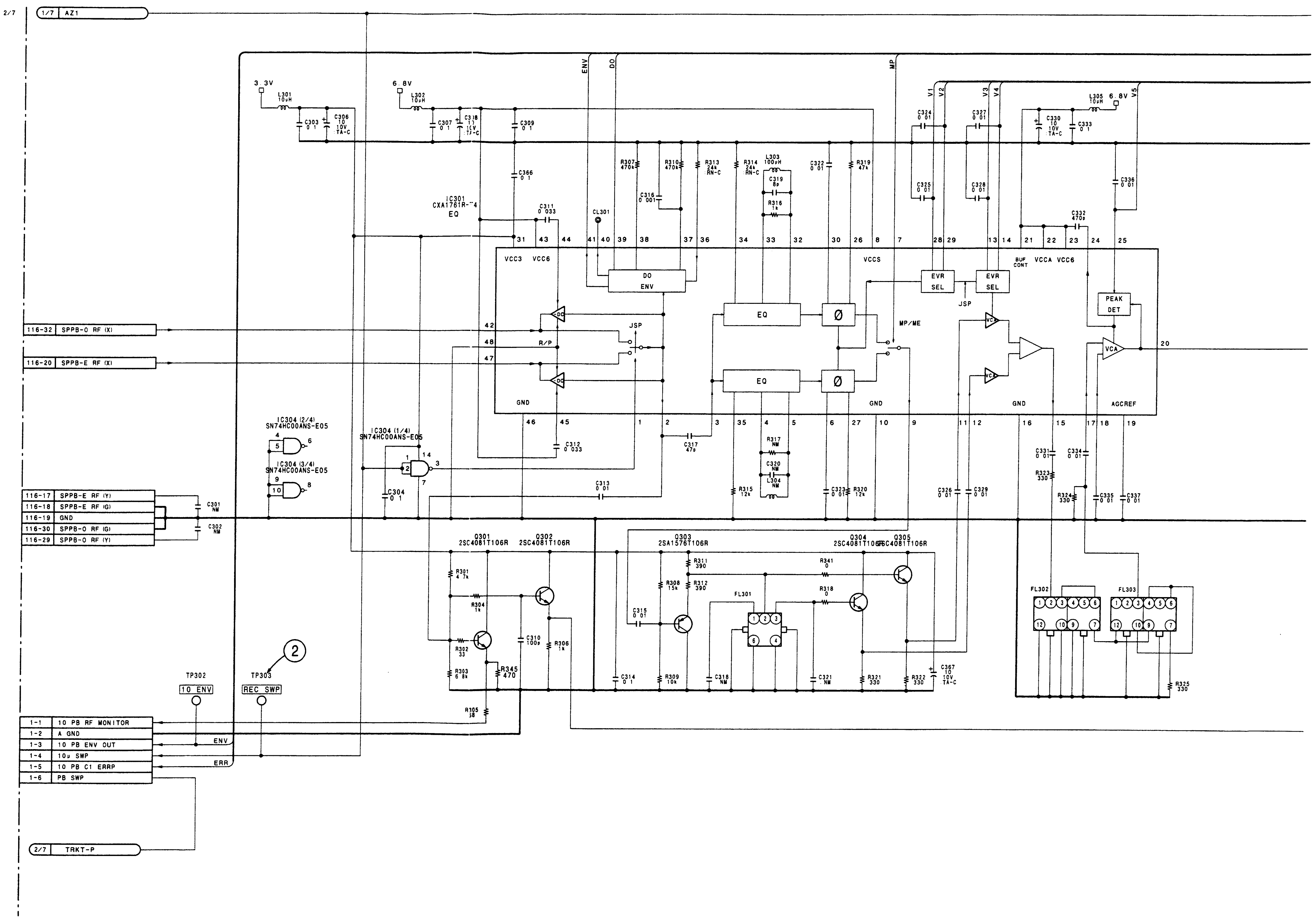

DSR-80/80P

1

2

3

4

5

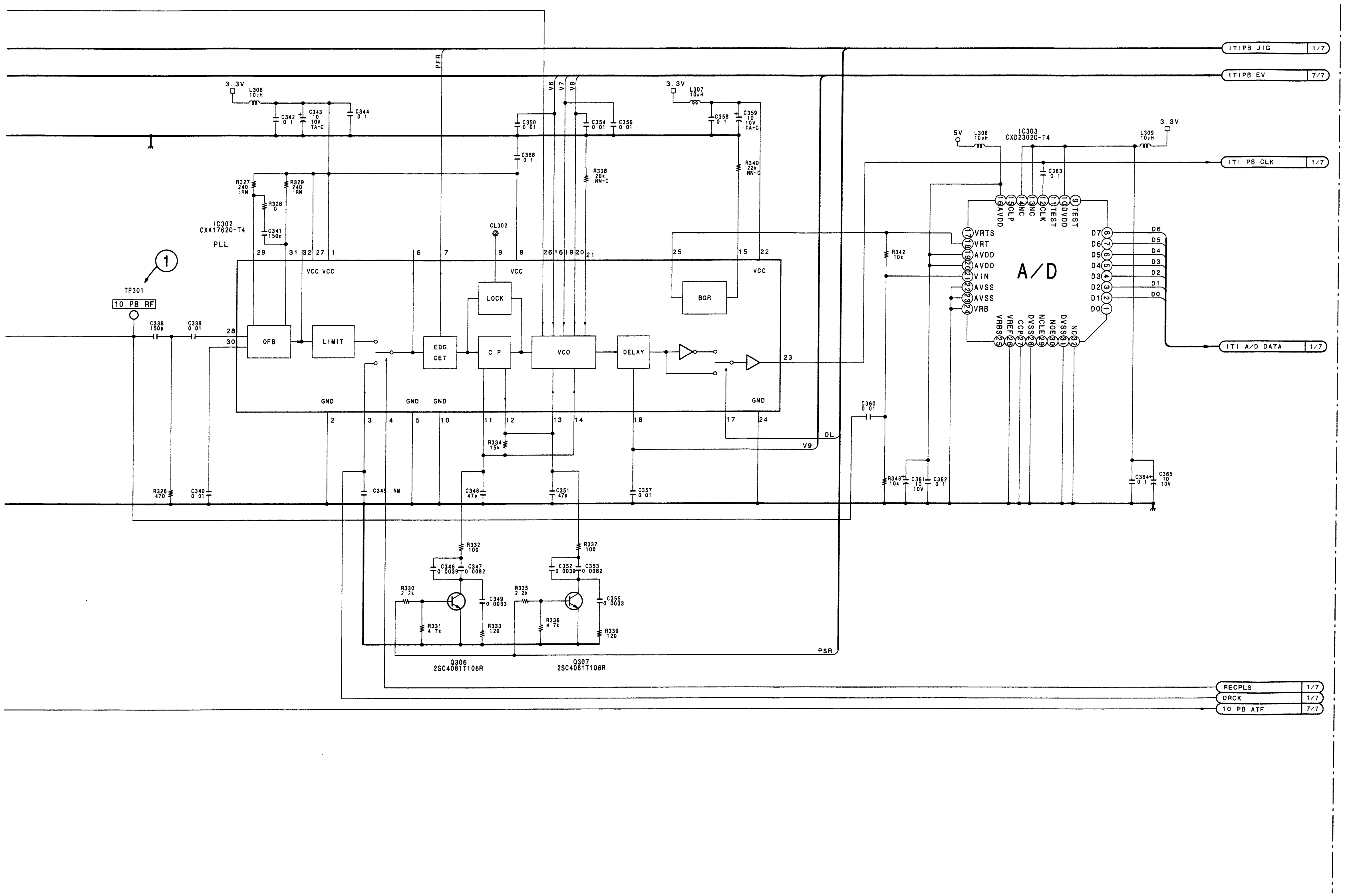

RP-101 (3/7)

BOARD SUFFIX : -14
MODEL DSR-80/80P

RP-101 (4/7): REC/PB HEAD AMP, RF A/D

DSR-80/80P

1

2

3

4

5

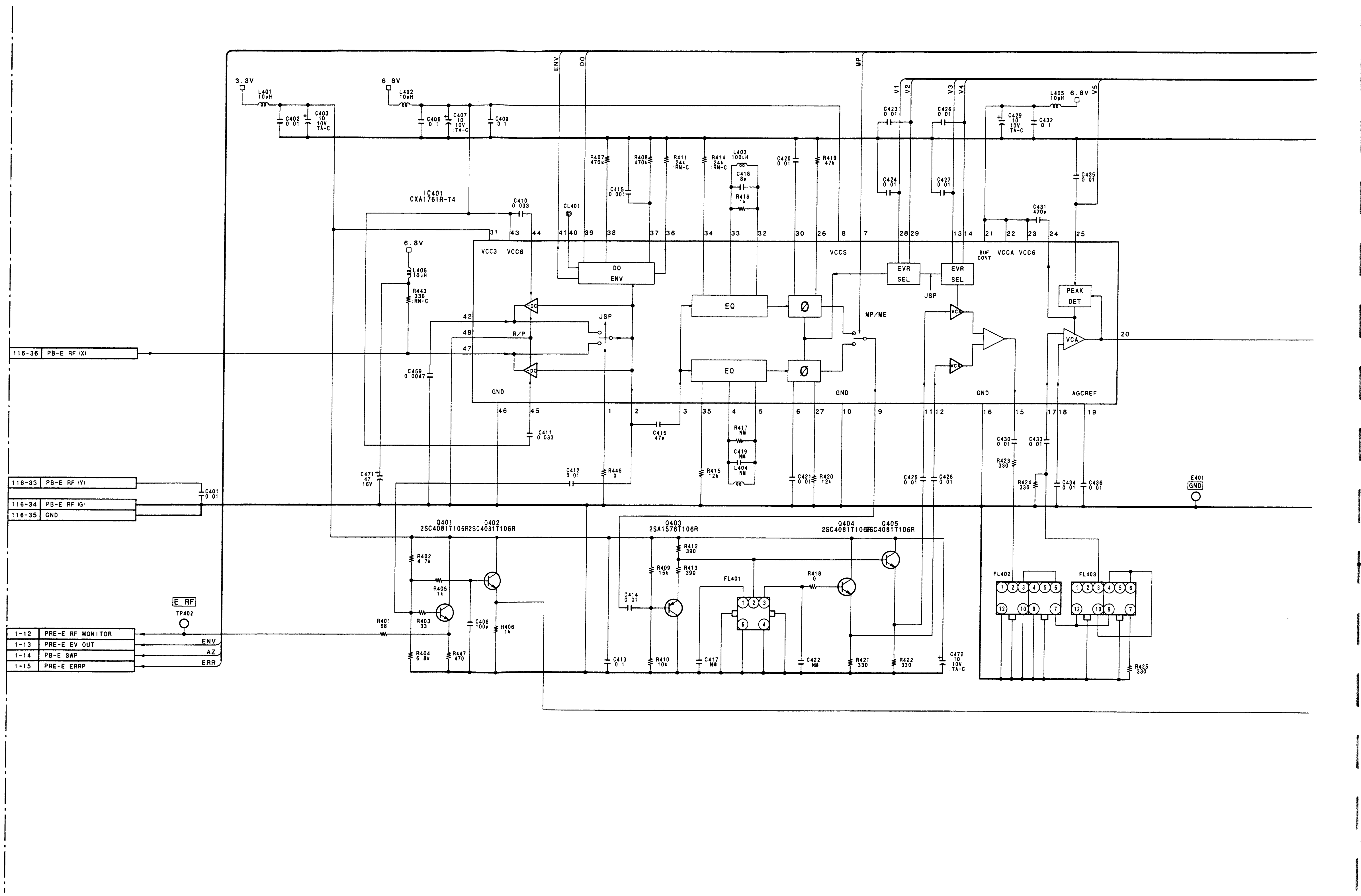

A | B | C | D | E | F | G | H

1

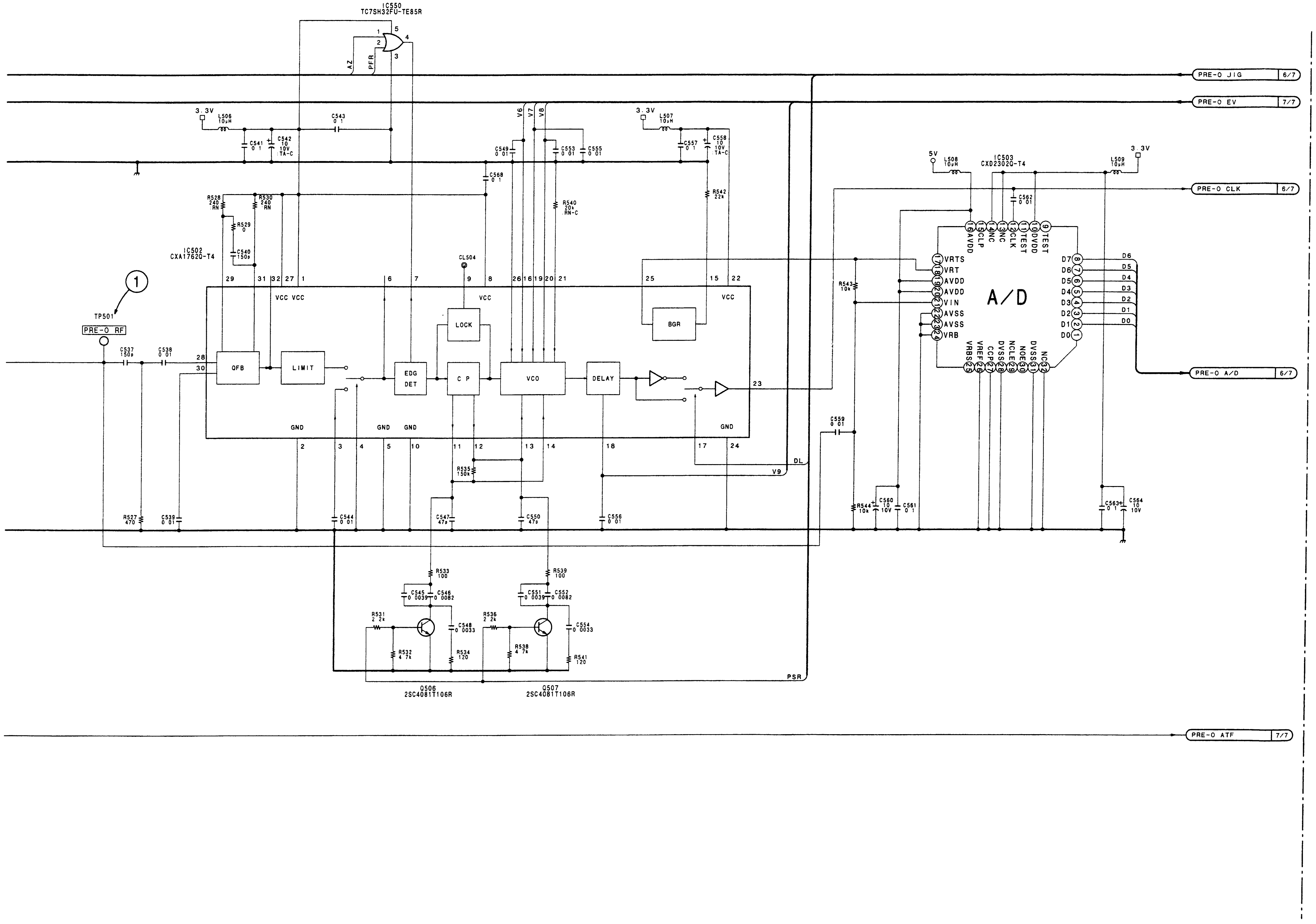

① TP401 MODE: 75% Color Bar/PB (NTSC)
① TP501 MODE: 100% Color Bar/PB (PAL)
② TP303

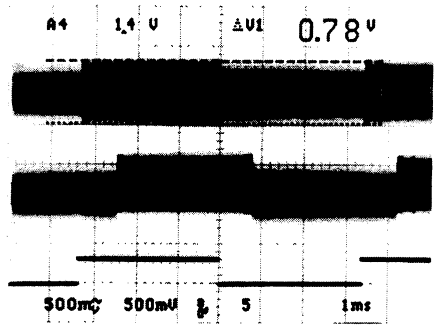

2

3

4

5

RP-101 (5/7)
BOARD SUFFIX : -14
MODEL DSR-80/80P

RP-101 (6/7): REC/PB HEAD AMP, RF A/D

DSR-80/80P

1
2
3
4
5

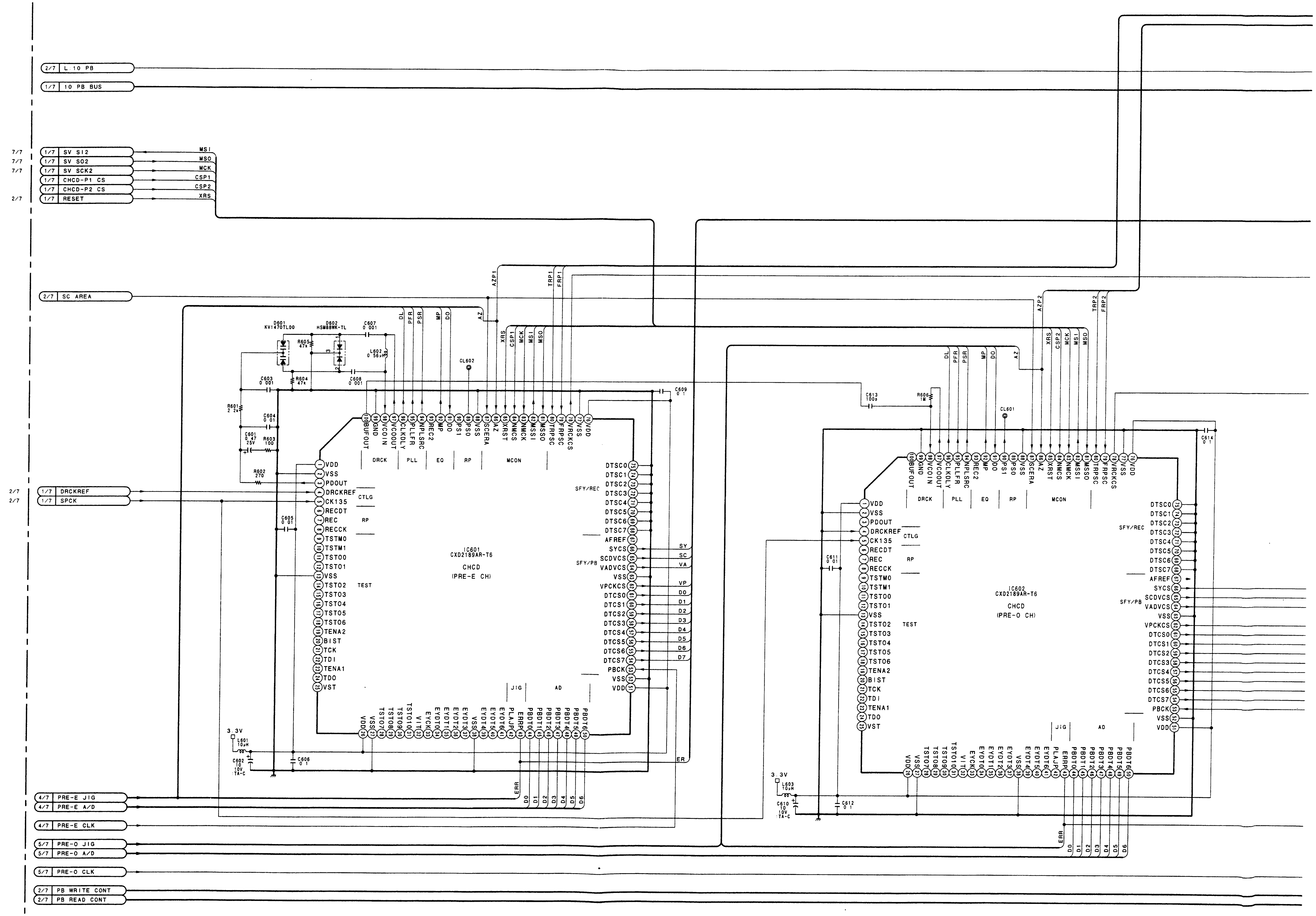

A | B | C | D | E | F | G | H

RP-101 (4/7)

DSR-80/80P

DSR-80/80P

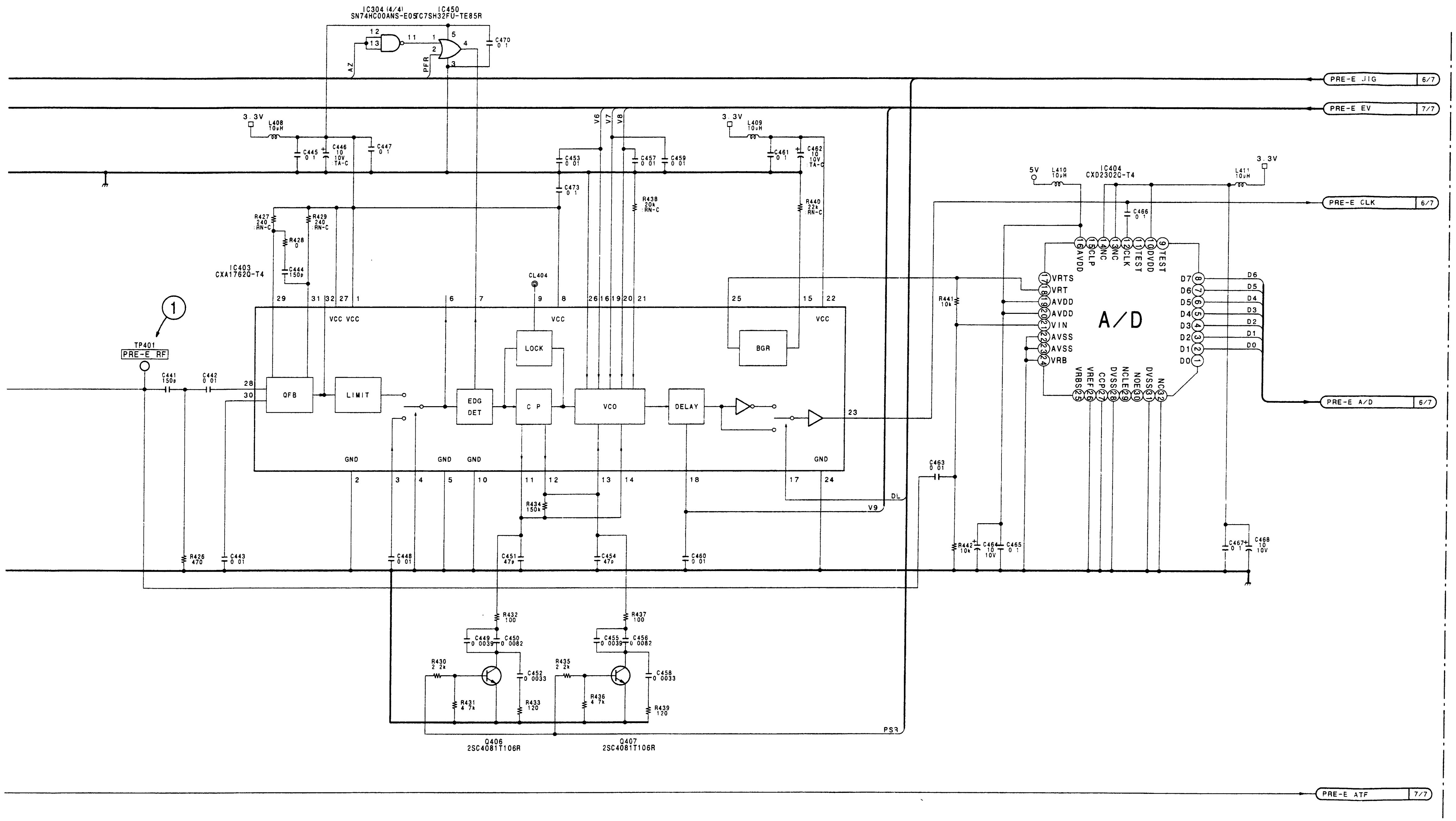

① TP401 MODE: 75% Color Bar/PB (NTSC)
① TP501 MODE: 100% Color Bar/PB (PAL)
② TP303

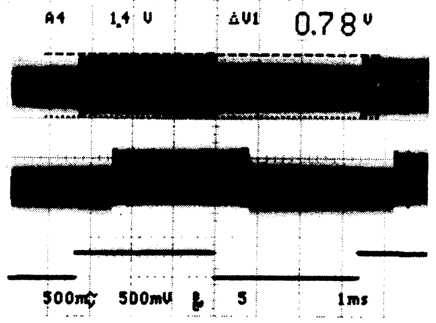

1
2
3
4
5

RP-101 (4/7)
BOARD SUFFIX : -14
MODEL DSR-80/80P

13-97 (b)

DSR-80/80P

RP-101 (5/7): REC/PB HEAD AMP, RF A/D

1

2

3

4

5

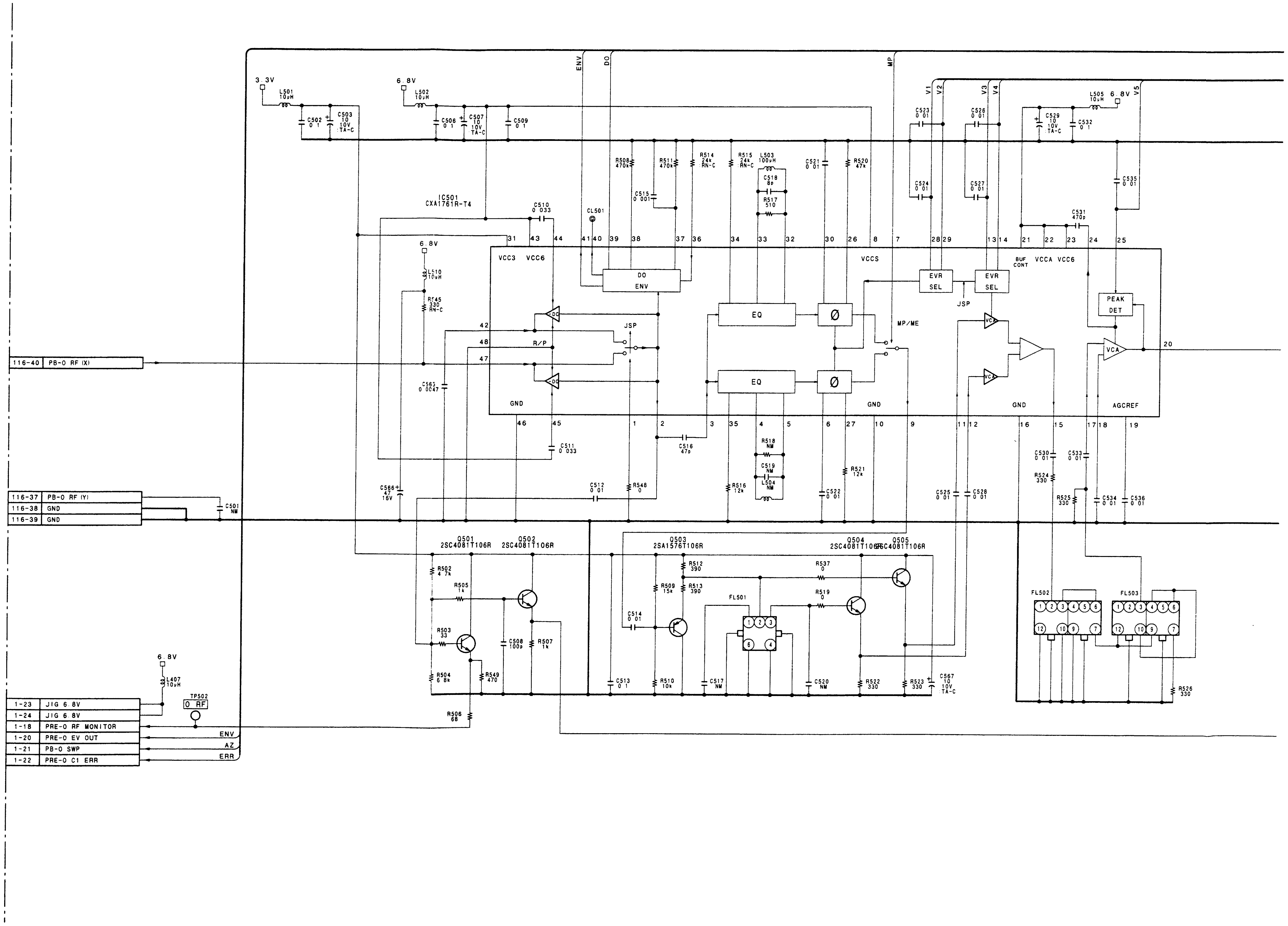

DSR-80/80P

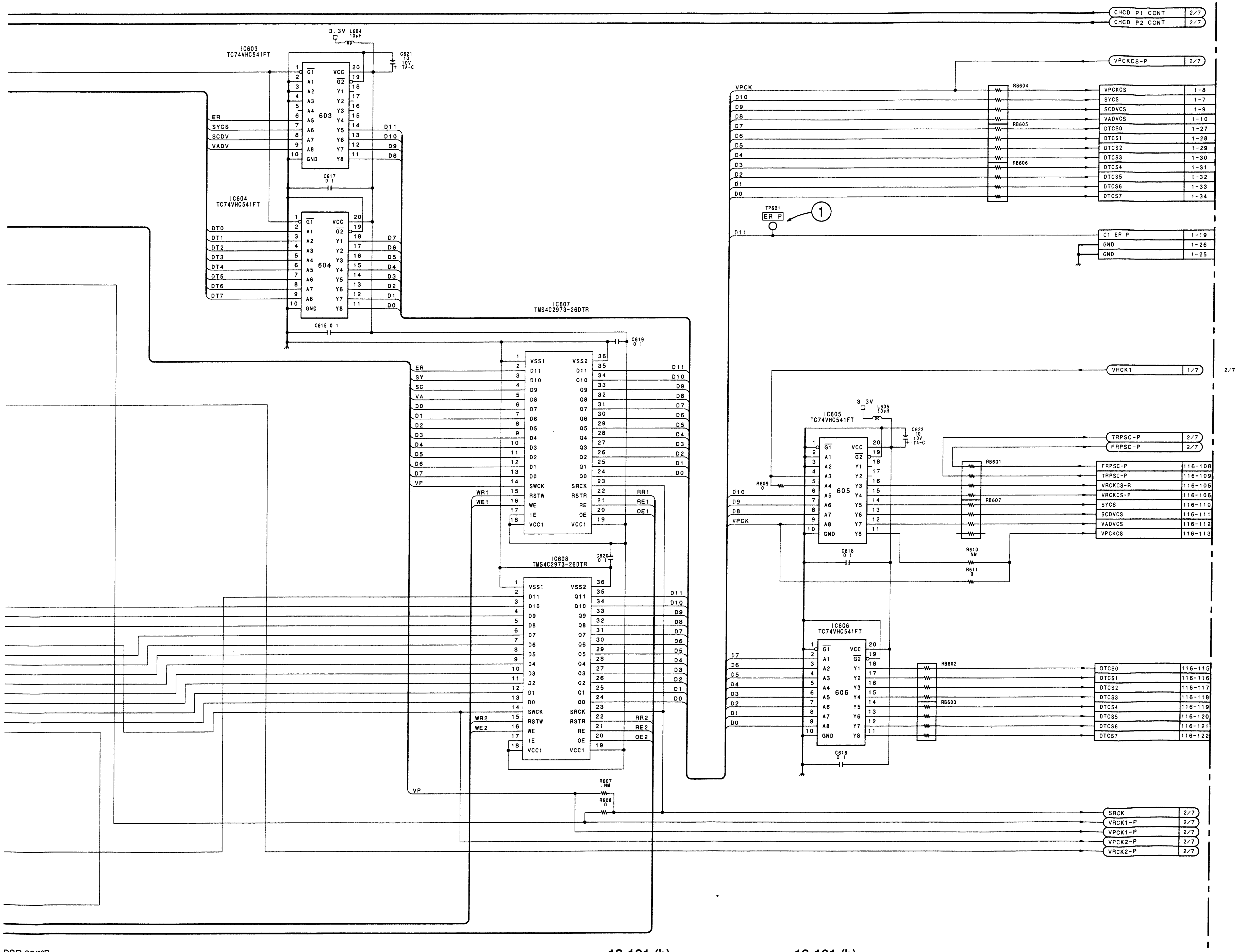

RP-101 (6/7)

BOARD SUFFIX : -14
MODEL DSR-80/80P

RP-101 (7/7): REC/PB HEAD AMP, RF A/D

DSR-80/80P

1

2

3

4

5

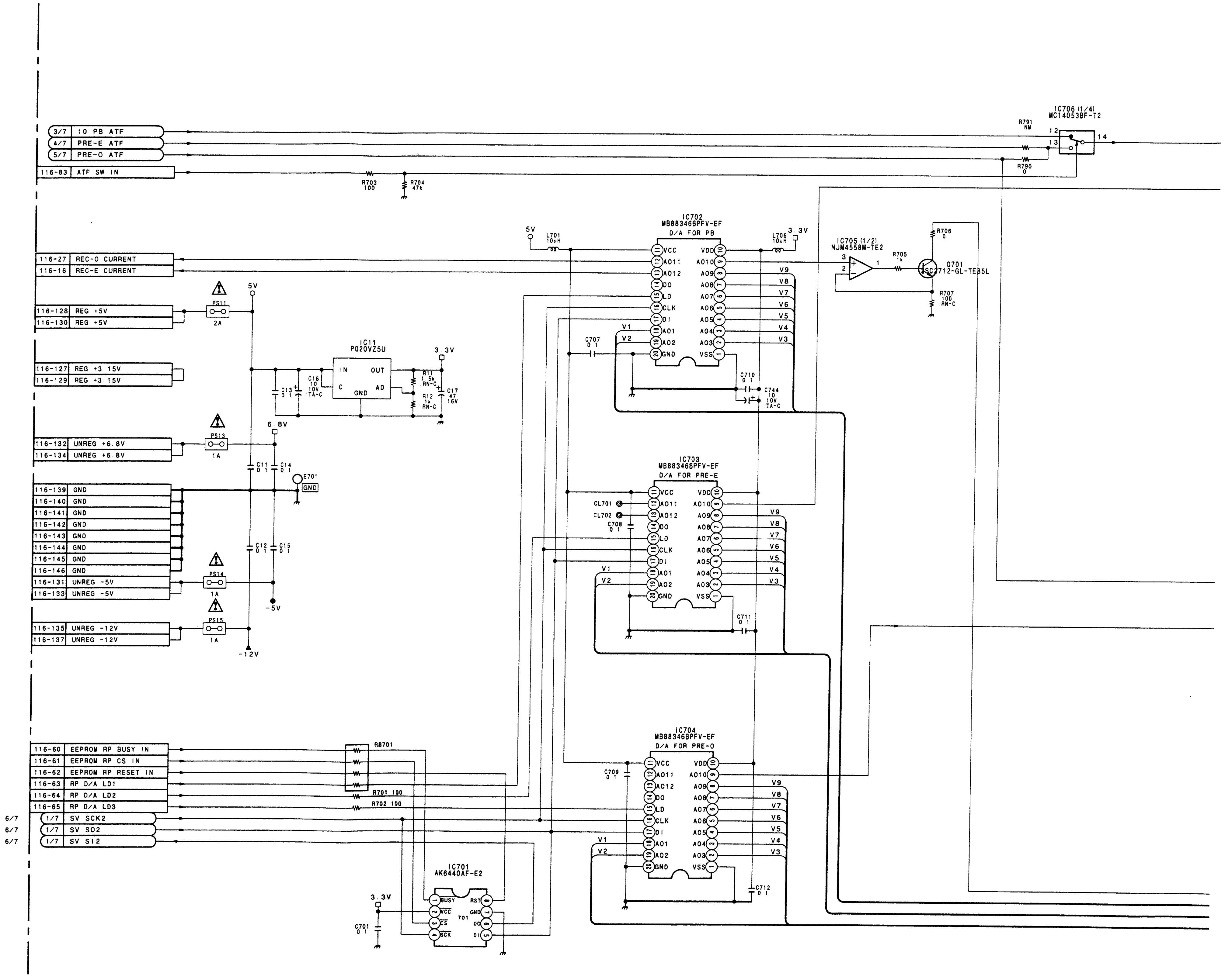

A B C D E F G H

DSR-80/80P

1

—

2

—

3

—

4

—

5

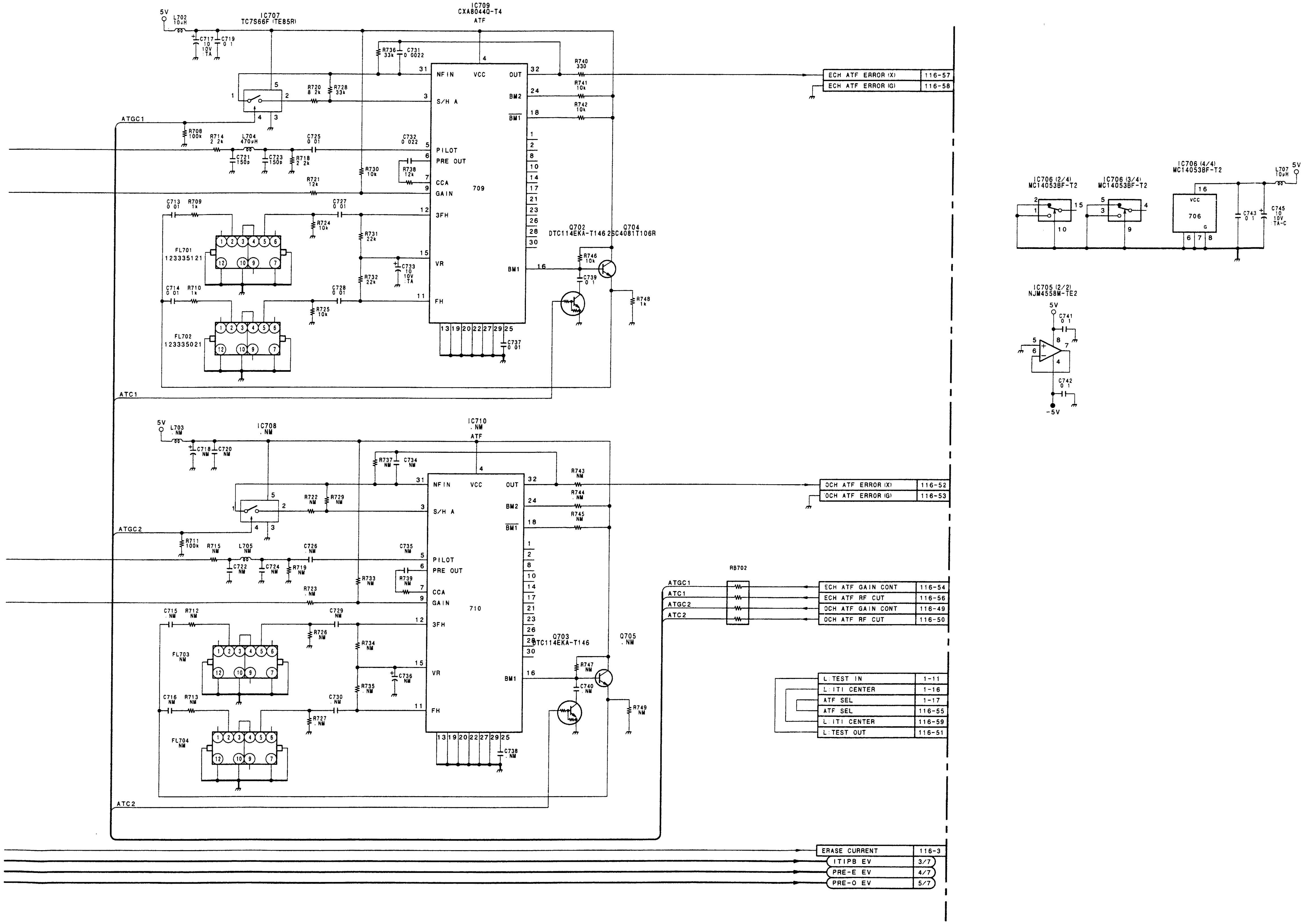

RP-101 (7/7)

BOARD SUFFIX : -14
MODEL DSR-80/80P

)NY-SP0754 / DRUCK 353

RP-101 (1/7): REC/PB HEAD AMP, RF A/D

DSR-80/80P

DSR-80/80P

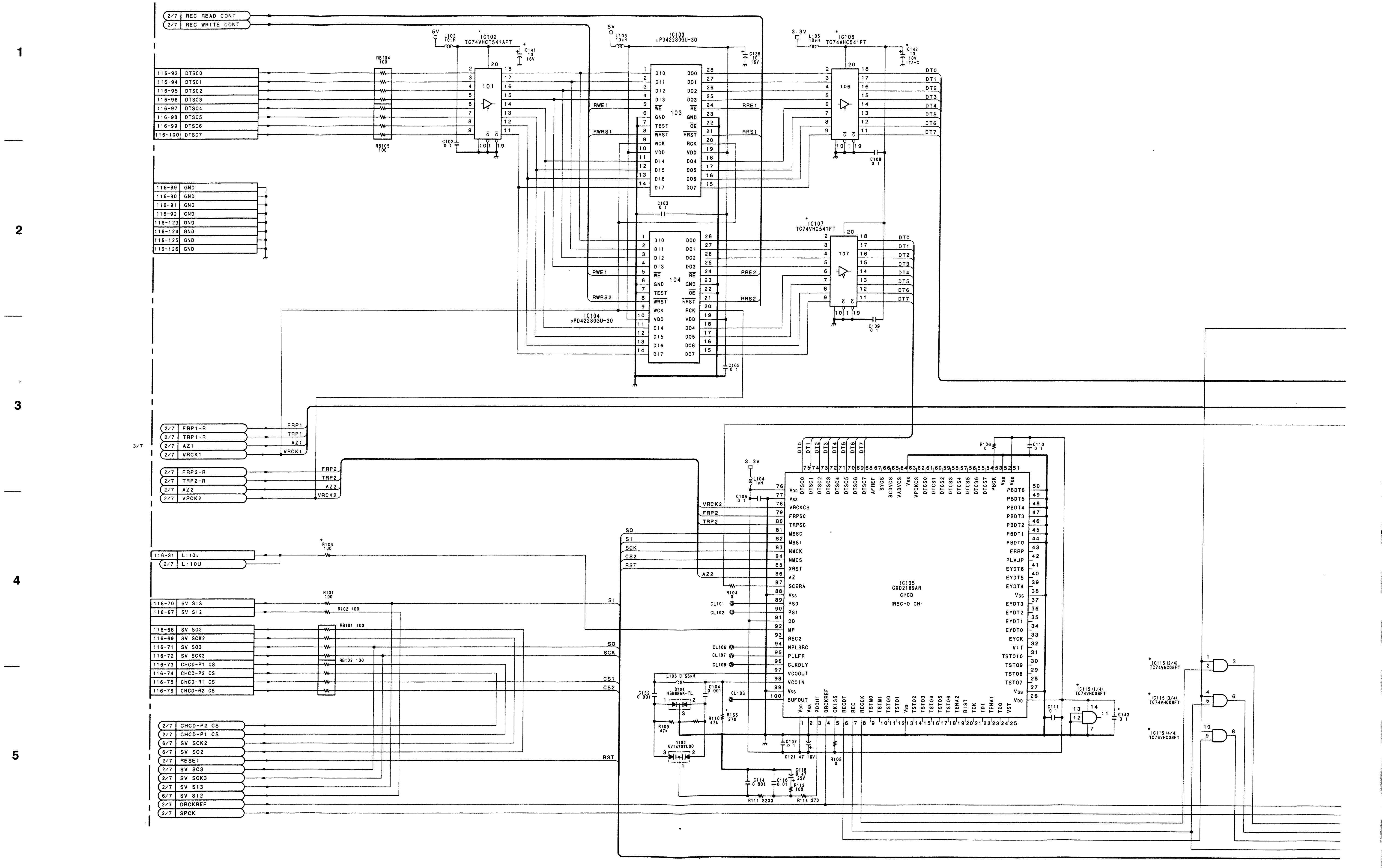

A | B | C | D | E | F | G | H

DSR-80/80P

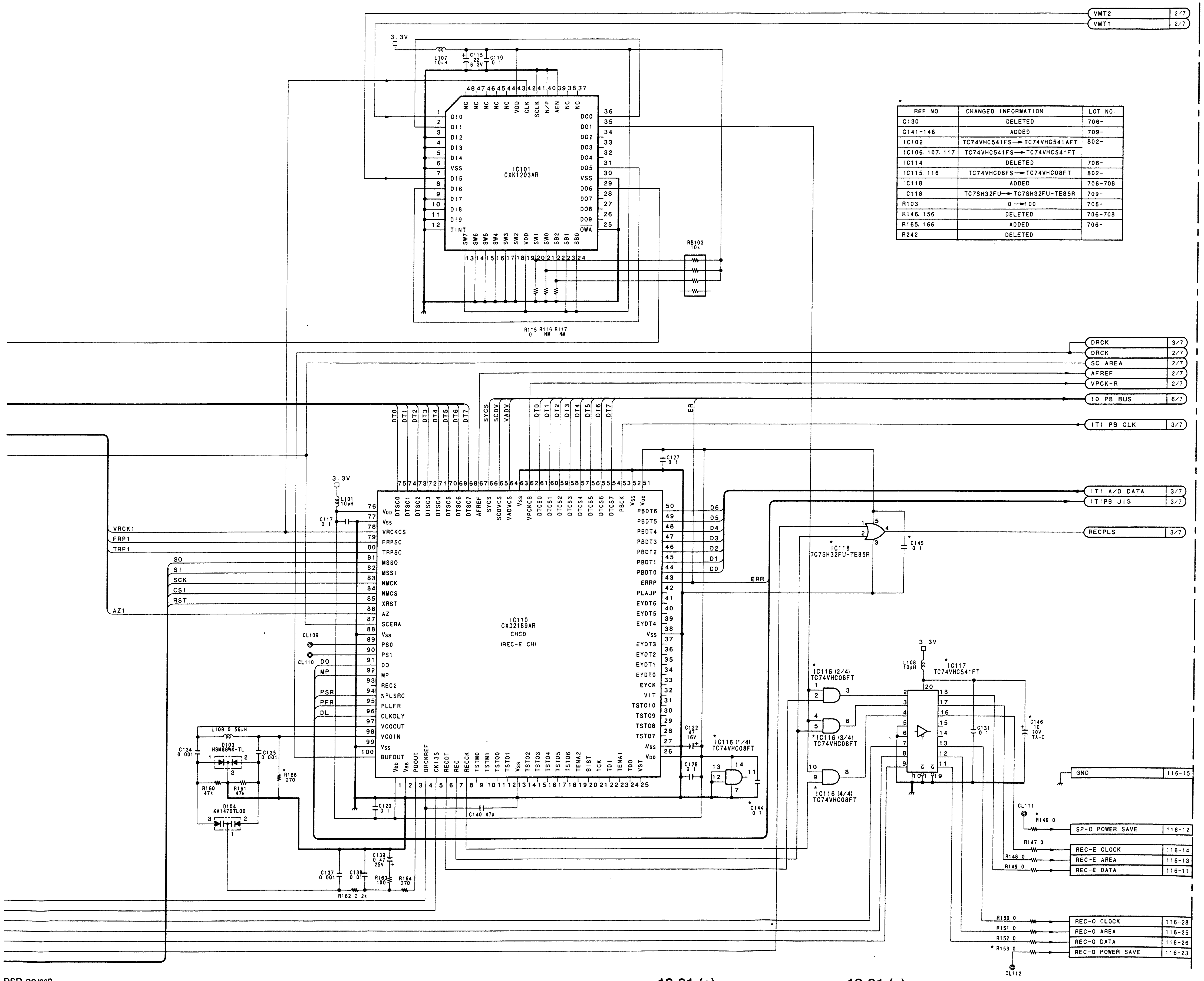

*

REF NO.	CHANGED INFORMATION	LOT NO.
C130	DELETED	706-
C141-146	ADDED	709-
IC102	TC74VHC541FS→TC74VHC541AFT	802-
IC106, 107, 117	TC74VHC541FS→TC74VHC541FT	
IC114	DELETED	706-
IC115, 116	TC74VHC08FS→TC74VHC08FT	802-
IC118	ADDED	706-708
IC118	TC7SH32FU→TC7SH32FU-TE85R	709-
R103	0 →100	706-
R146, 156	DELETED	706-708
R165, 166	ADDED	706-
R242	DELETED	

RP-101 (1/7)

BOARD SUFFIX : -13
MODEL DSR-80/80P

RP-101 (2/7): REC/PB HEAD AMP, RF A/D

DSR-80/80P

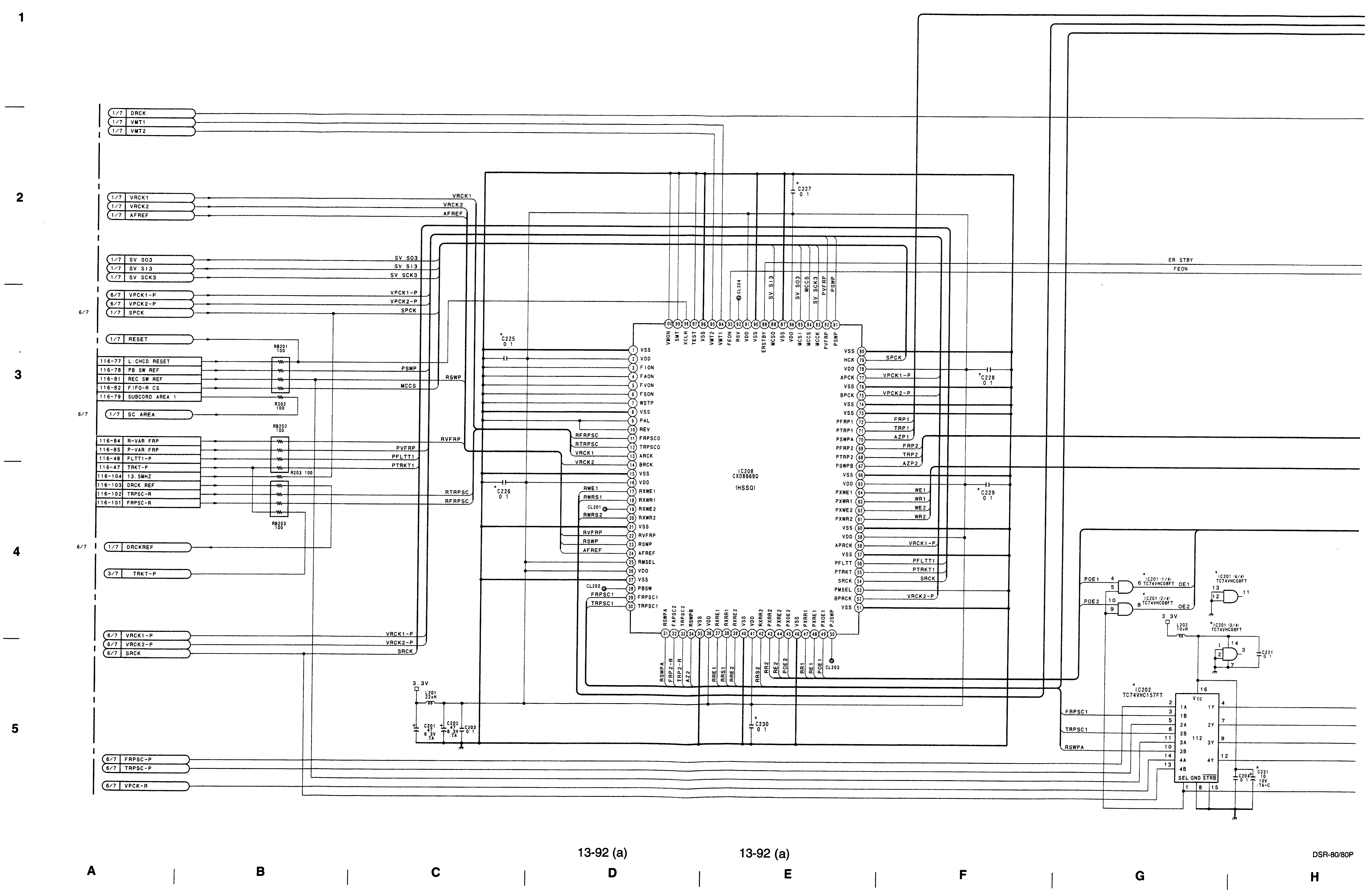

SONY-SP0754 / DRUCK 356

 DSR-80/80P

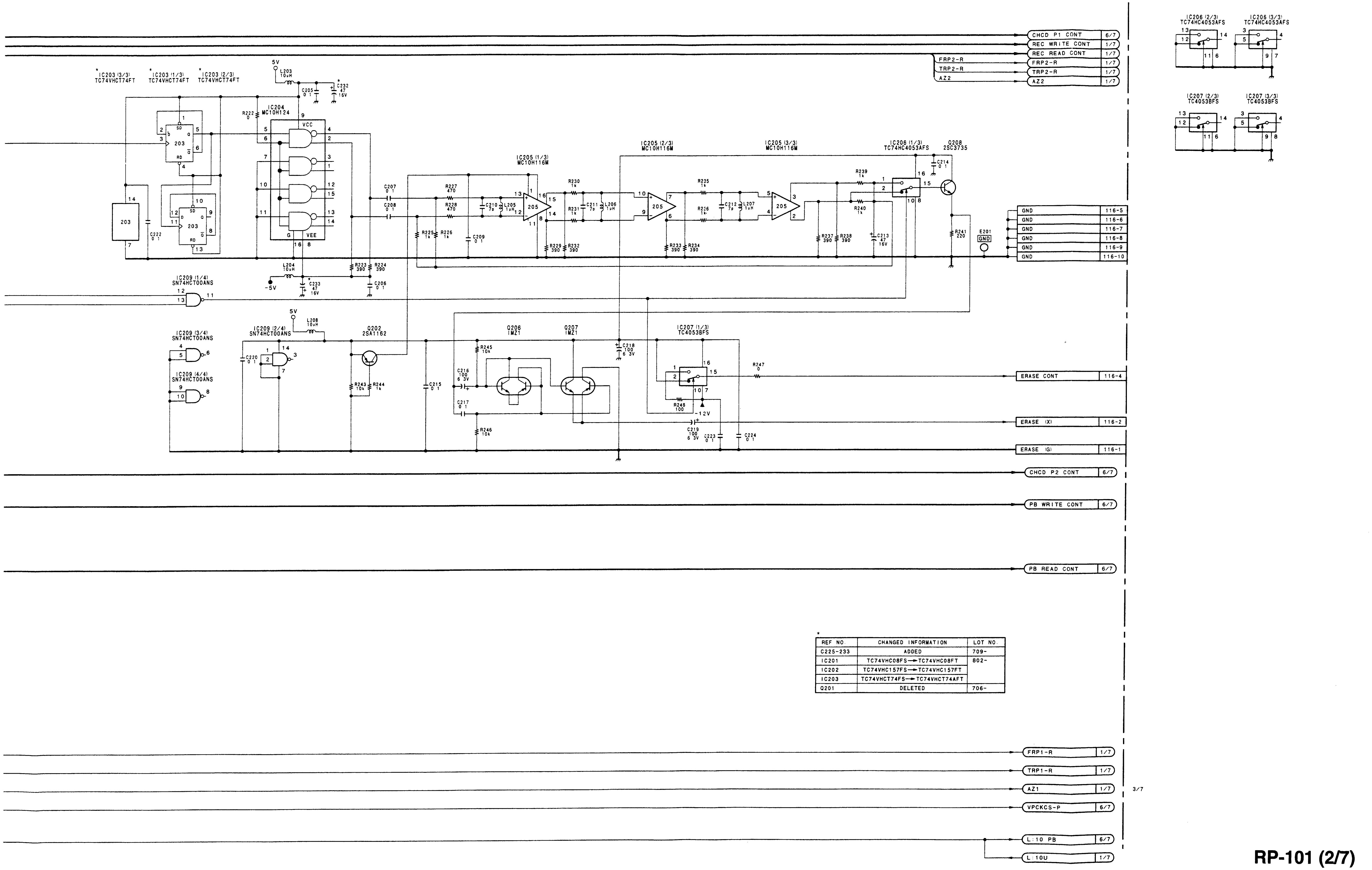

*

REF NO.	CHANGED INFORMATION	LOT NO.
C225-233	ADDED	709-
IC201	TC74VHC08FS→TC74VHC08FT	802-
IC202	TC74VHC157FS→TC74VHC157FT	
IC203	TC74VHCT74FS→TC74VHCT74AFT	
Q201	DELETED	706-

1
2
3
4
5

RP-101 (2/7)
BOARD SUFFIX : -13
MODEL DSR-80/80P

I | J | K | L | M | N | O | P

DSR-80/80P

RP-101 (3/7): REC/PB HEAD AMP, RF A/D

RP-101 (3/7)

① TP301 (MODE: 75% Color Bar/PB (NTSC))
② TP303 (MODE: 100% Color Bar/PB (PAL))

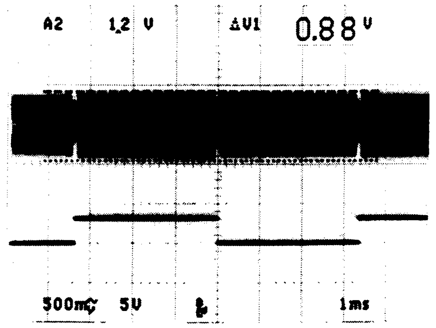

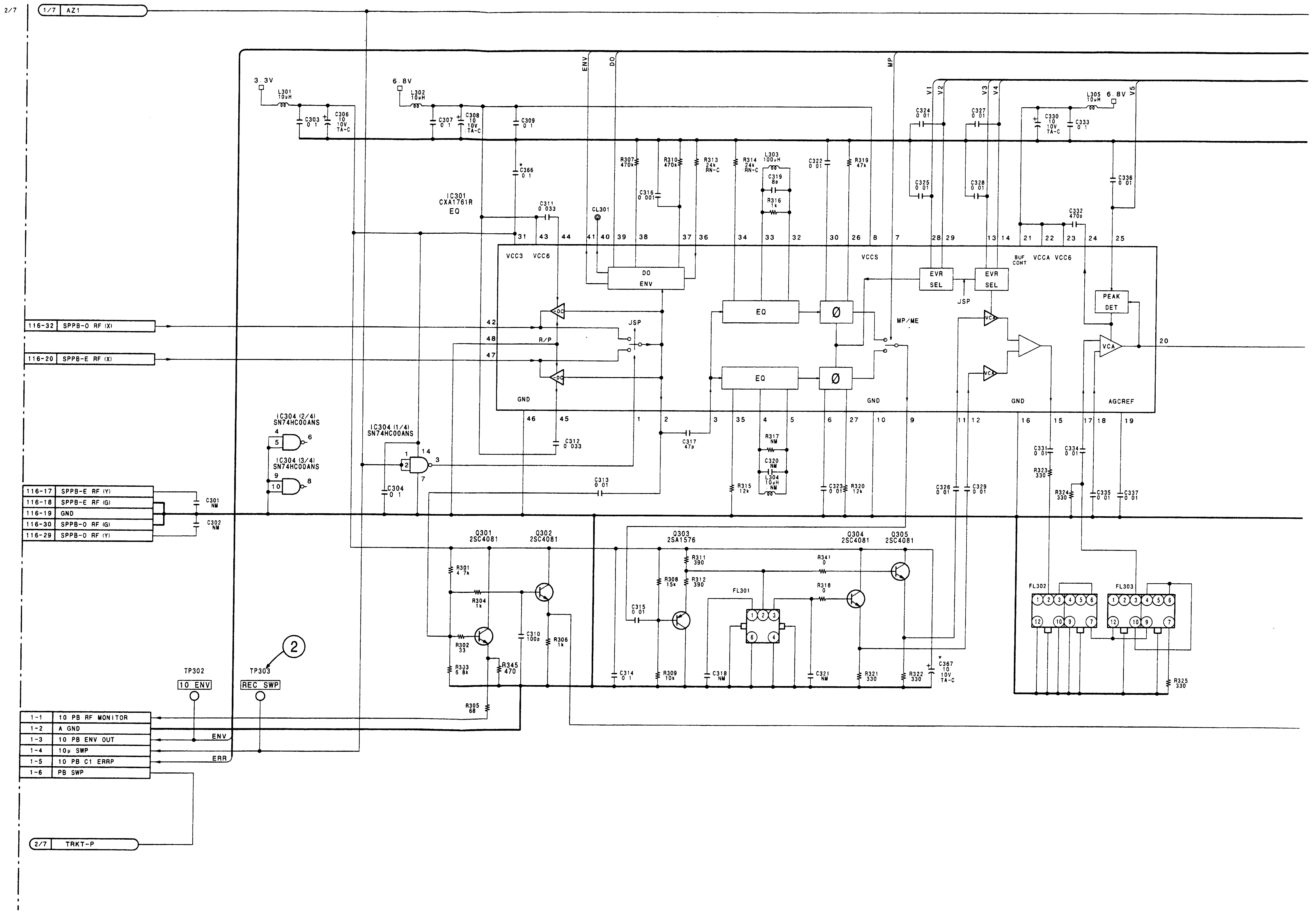

DSR-80/80P

1
2
3
4
5

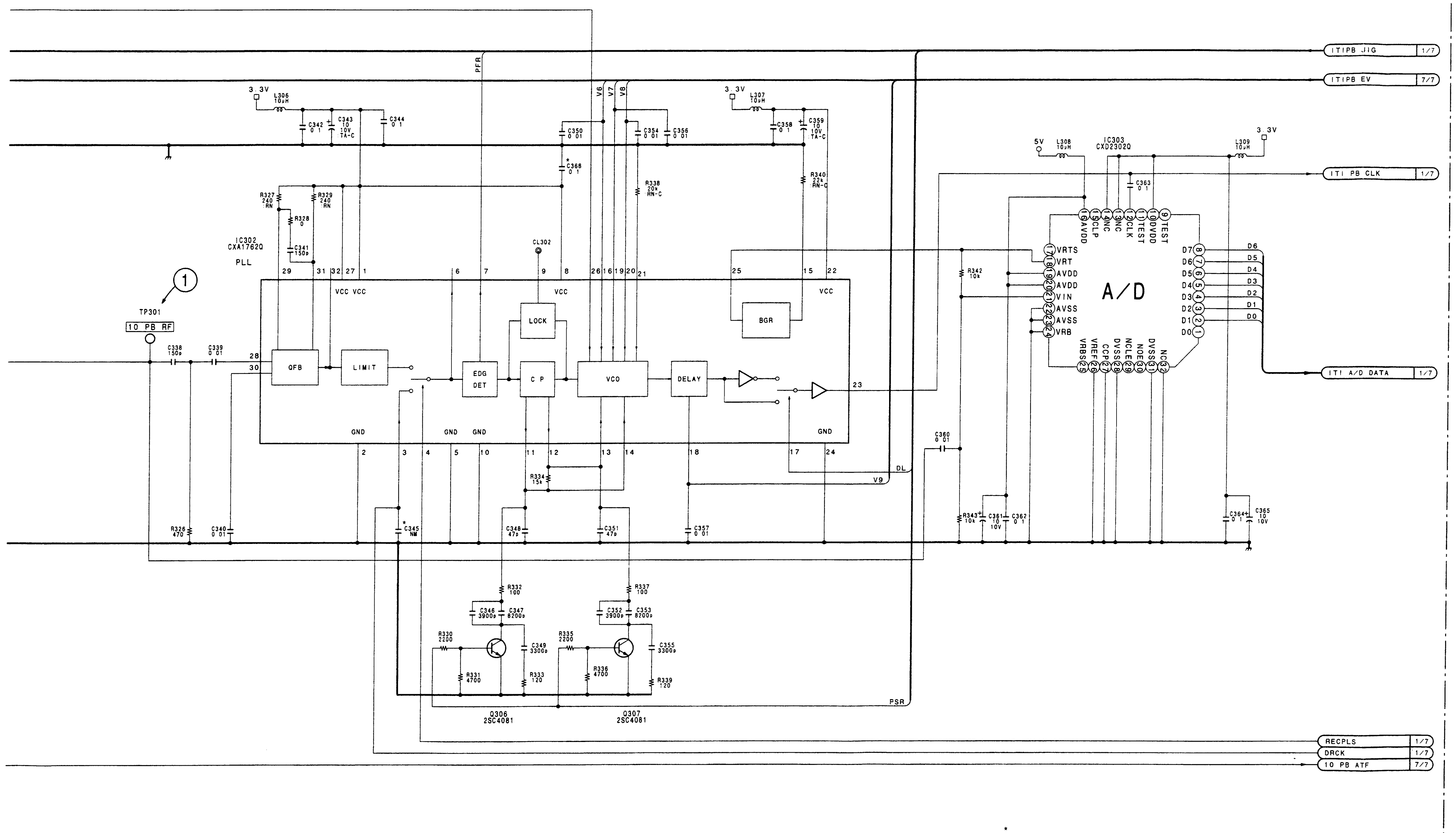

*

REF NO.	CHANGED INFORMATION	LOT NO.
C345	DELETED	709-
C366-368	ADDED	
Q308	DELETED	
R344		

RP-101 (3/7)
BOARD SUFFIX : -13
MODEL DSR-80/80P

I | J | K | L | M | N | O | P

RP-101 (4/7): REC/PB HEAD AMP, RF A/D

DSR-80/80P

1

2

3

4

5

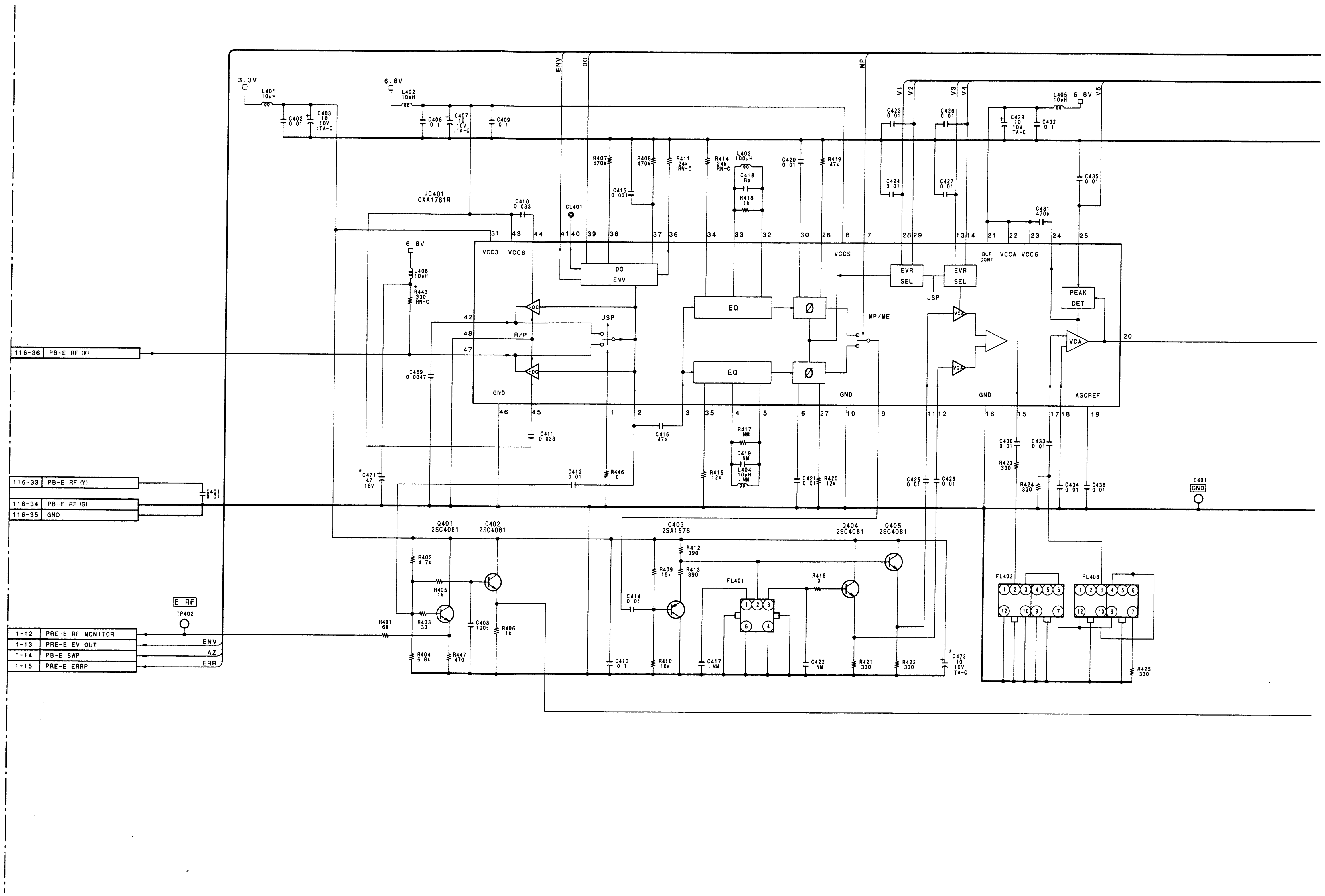

A | B | C | D | E | F | G | H

SONY-SP0754 / DRUCK 360

DSR-80/80P

1

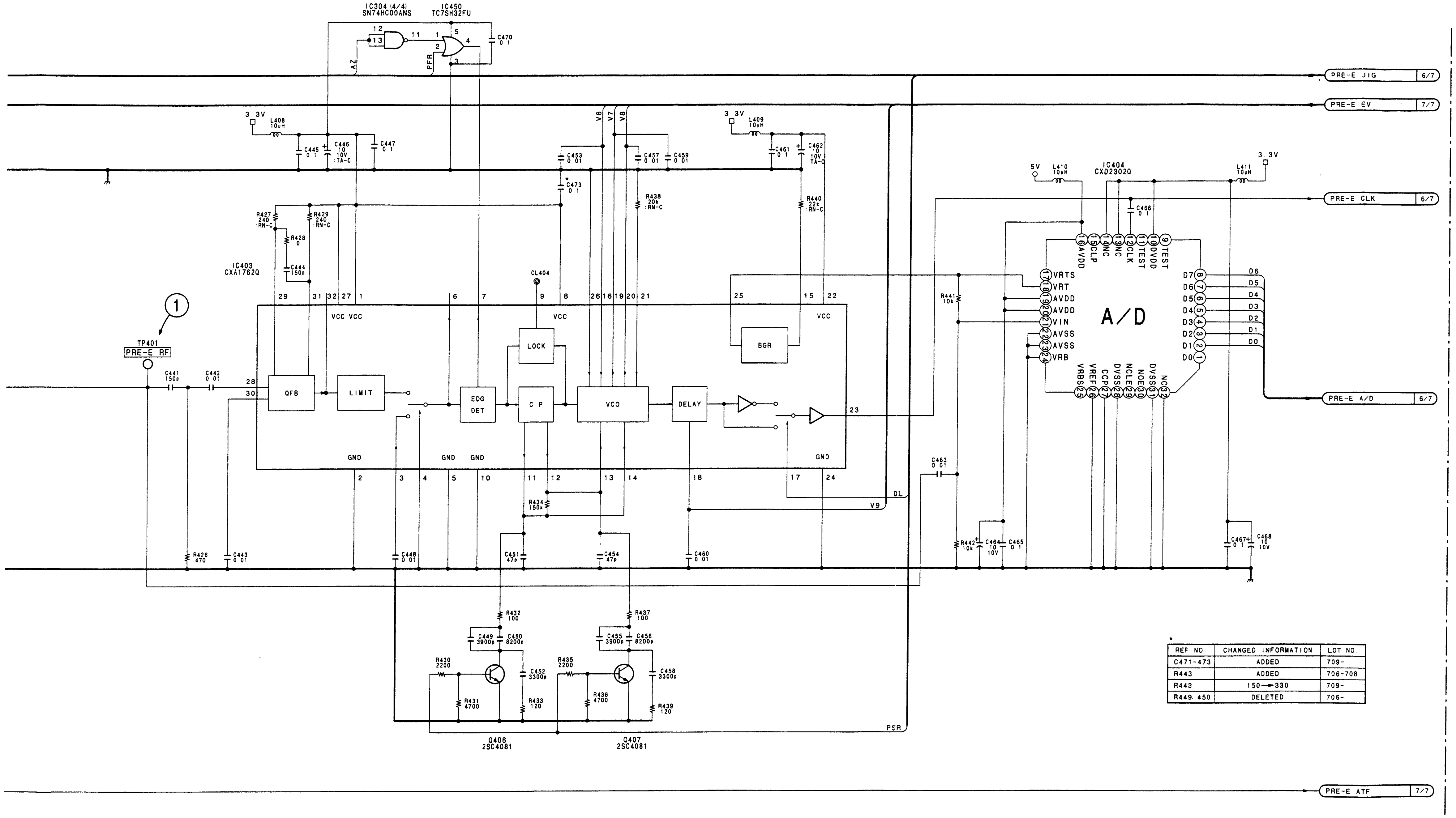

① TP401 MODE: 75% Color Bar/PB (NTSC)
① TP501 MODE: 100% Color Bar/PB (PAL)
② TP303

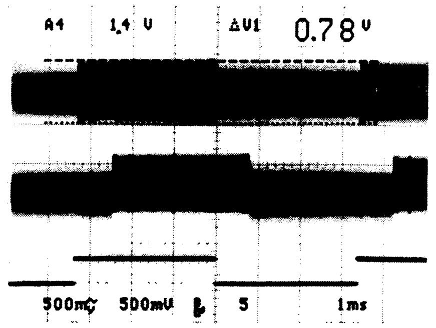

2

3

*

REF NO.	CHANGED INFORMATION	LOT NO.
C471-473	ADDED	709-
R443	ADDED	706-708
R443	150 → 330	709-
R449. 450	DELETED	706-

4

5

RP-101 (4/7)

BOARD SUFFIX : -13
MODEL DSR-80/80P

RP-101 (5/7): REC/PB HEAD AMP, RF A/D

DSR-80/80P

1

2

3

4

5

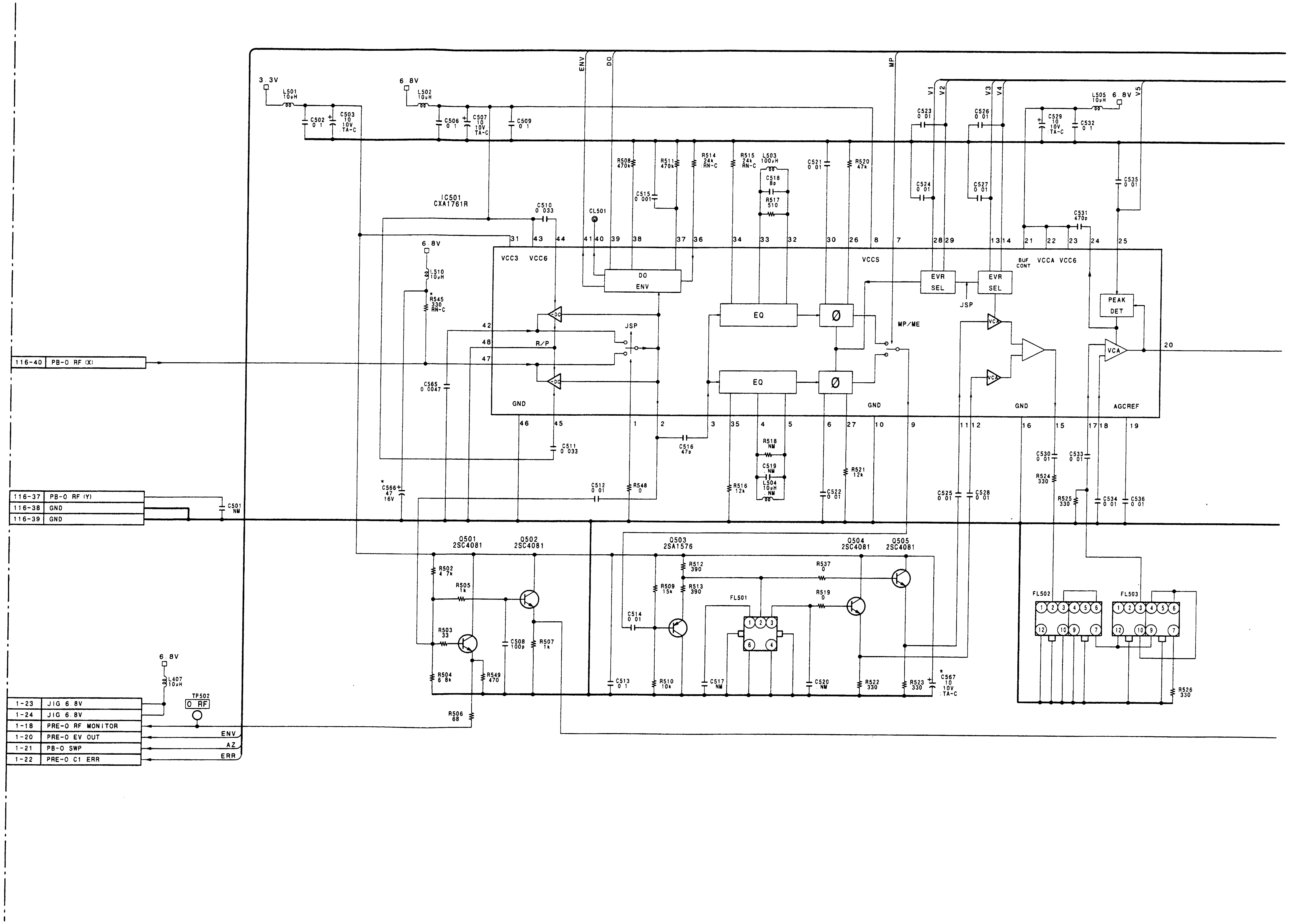

A | B | C | D | E | F | G | H

DSR-80/80P

1

① TP401 MODE: 75% Color Bar/PB (NTSC)
① TP501 MODE: 100% Color Bar/PB (PAL)
② TP303

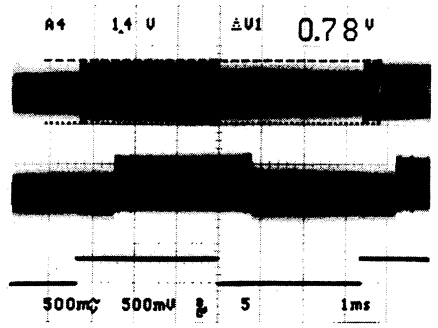

2

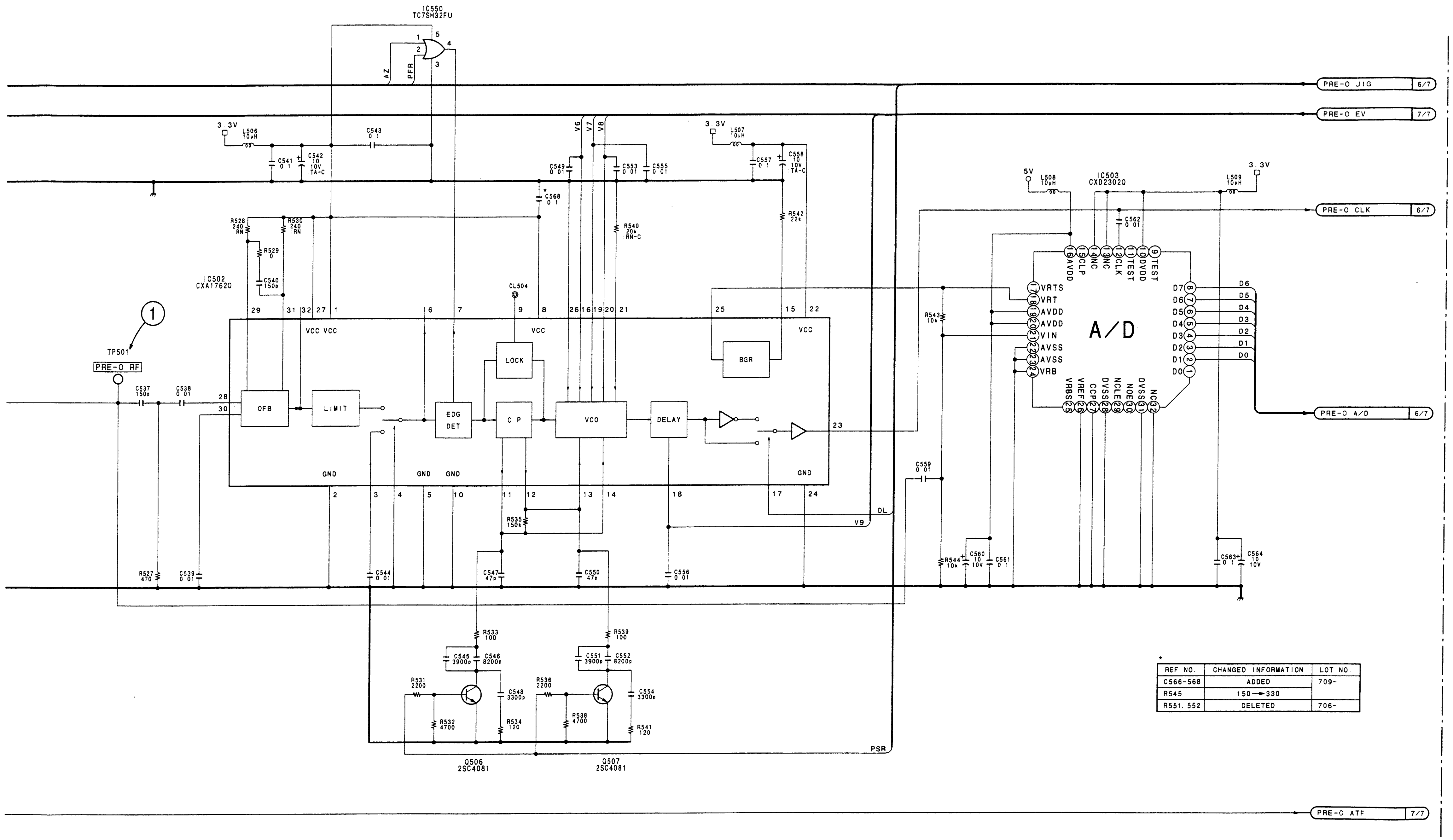

*

REF NO.	CHANGED INFORMATION	LOT NO.
C566-568	ADDED	709-
R545	150→330	
R551, 552	DELETED	706-

3

4

5

RP-101 (5/7)

BOARD SUFFIX : -13
MODEL DSR-80/80P

RP-101 (6/7): REC/PB HEAD AMP, RF A/D

DSR-80/80P

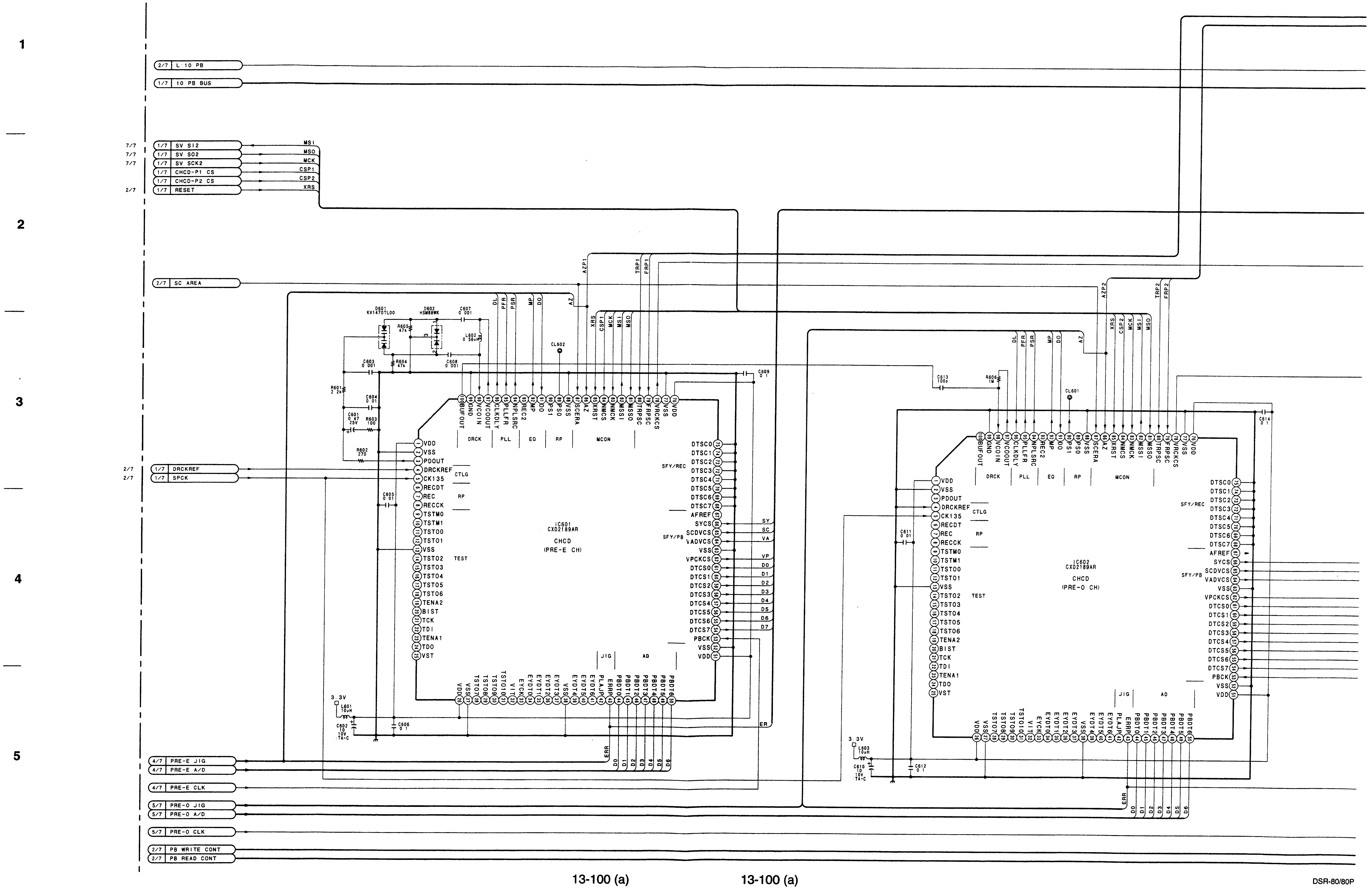

A | B | C | D | E | F | G | H

DSR-80/80P

DSR-80/80P

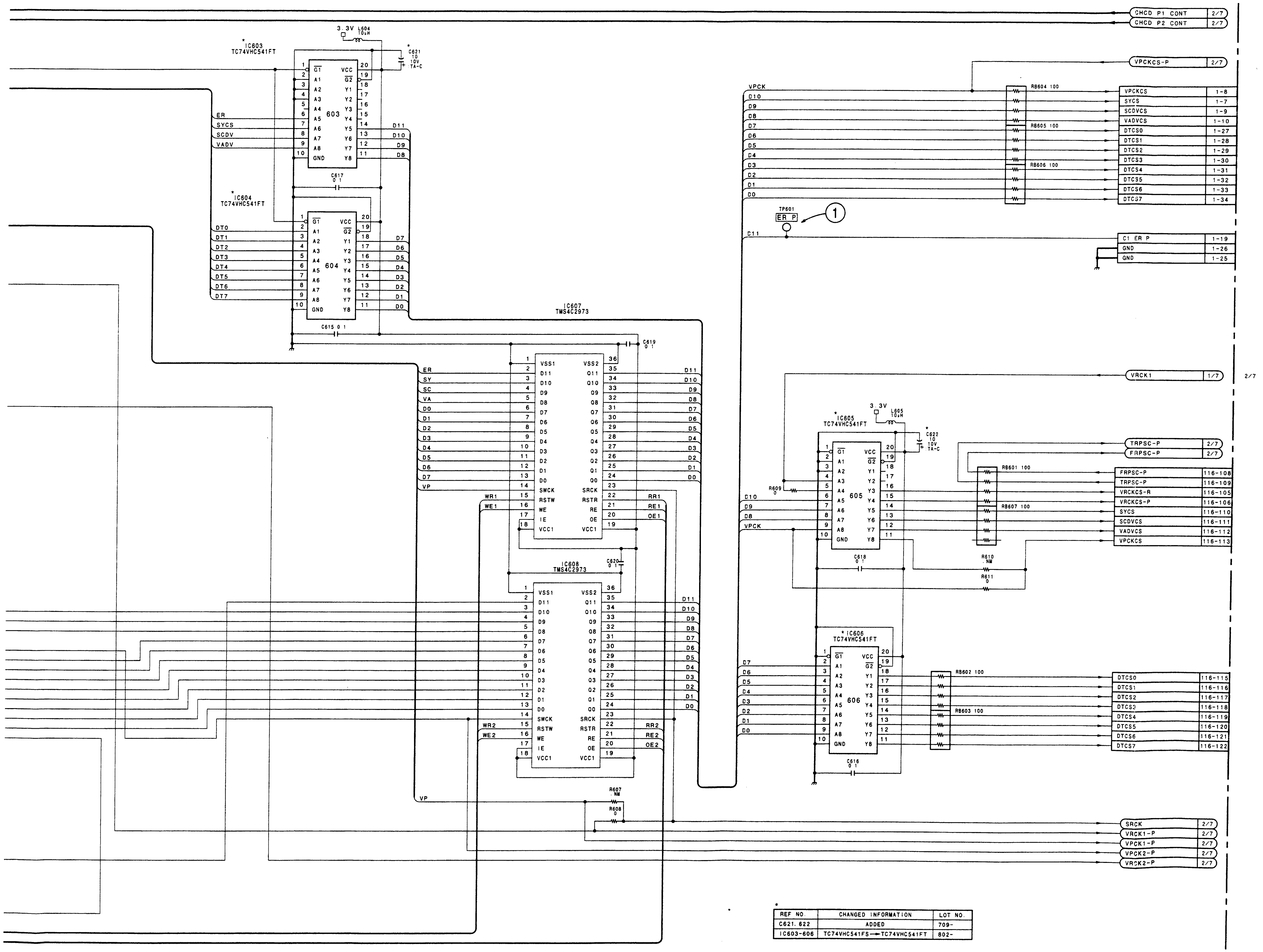

*

REF NO.	CHANGED INFORMATION	LOT NO.
C621, 622	ADDED	709-
IC603-606	TC74VHC541FS→TC74VHC541FT	802-

1 2 3 4 5

RP-101 (6/7)

BOARD SUFFIX : -13
MODEL DSR-80/80P

DSR-80/80P

I J K L M N O P

RP-101 (7/7): REC/PB HEAD AMP, RF A/D

DSR-80/80P

1

2

3

4

5

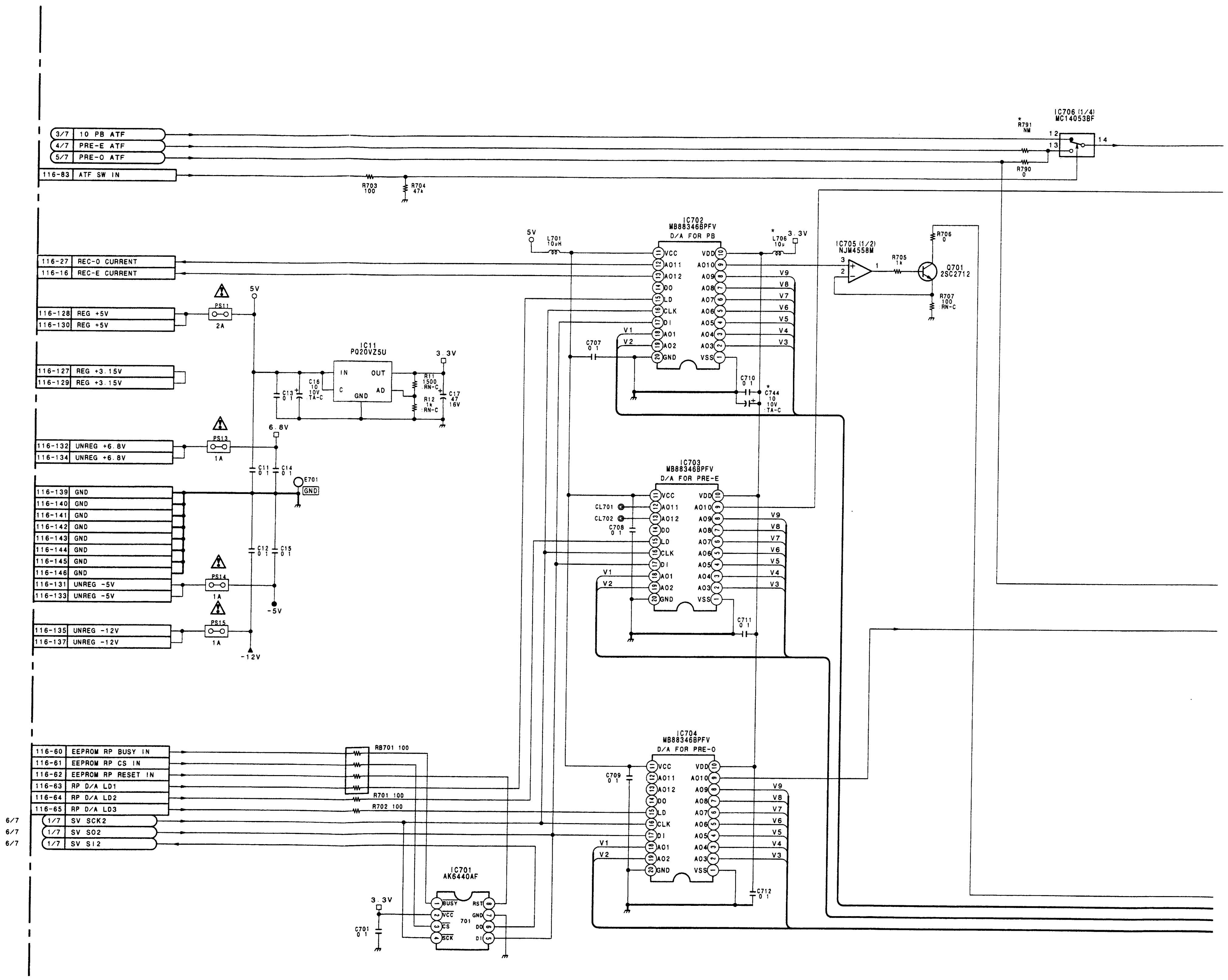

A | B | C | D | E | F | G | H

SONY-SP0754 / DRUCK 366

DSR-80/80P

DSR-80/80P

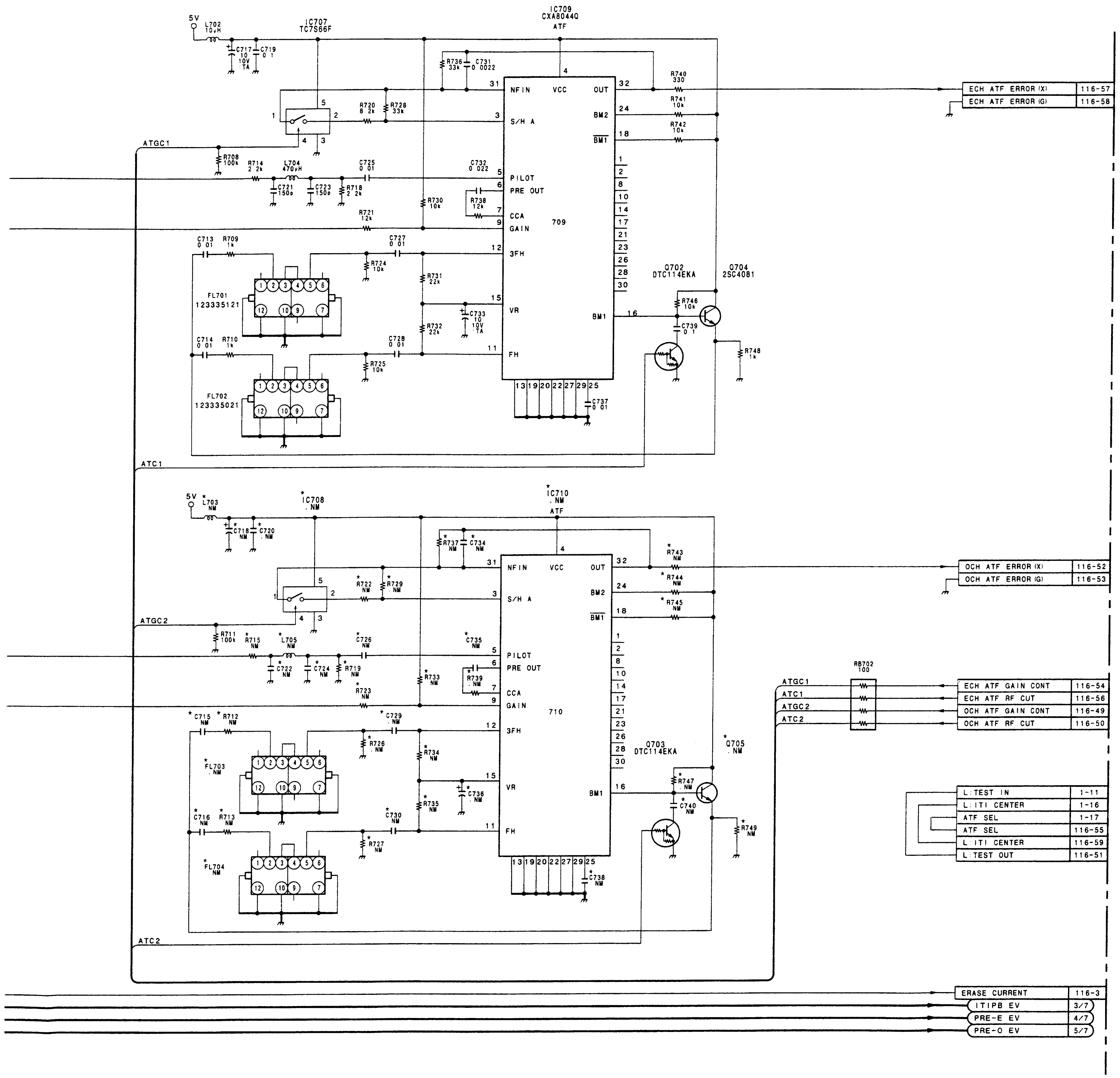

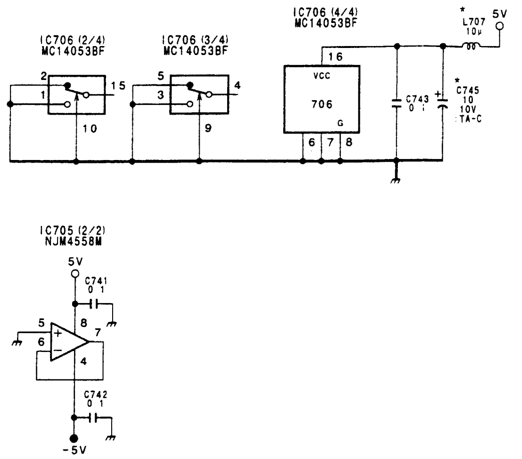

*

REF NO.	CHANGED INFORMATION	LOT NO.
C715. 716. 718. 720. 722	DELETED	706-
C724. 726. 729. 730		
C734-736. 738. 740		
C744. 745	ADDED	709-
FL703. 704	DELETED	706-
IC708. 710		
L703. 704		
L706. 707	ADDED	709-
Q705	DELETED	706-
R712. 713. 715. 719. 722		
R723. 726. 727. 729		
R733-735. 737. 739		
R743-745. 747. 749		

1 2 3 4 5

RP-101 (7/7)

BOARD SUFFIX : -13
MODEL DSR-80/80P

RP-101 (1/7): REC/PB HEAD AMP, RF A/D

DSR-80/80P

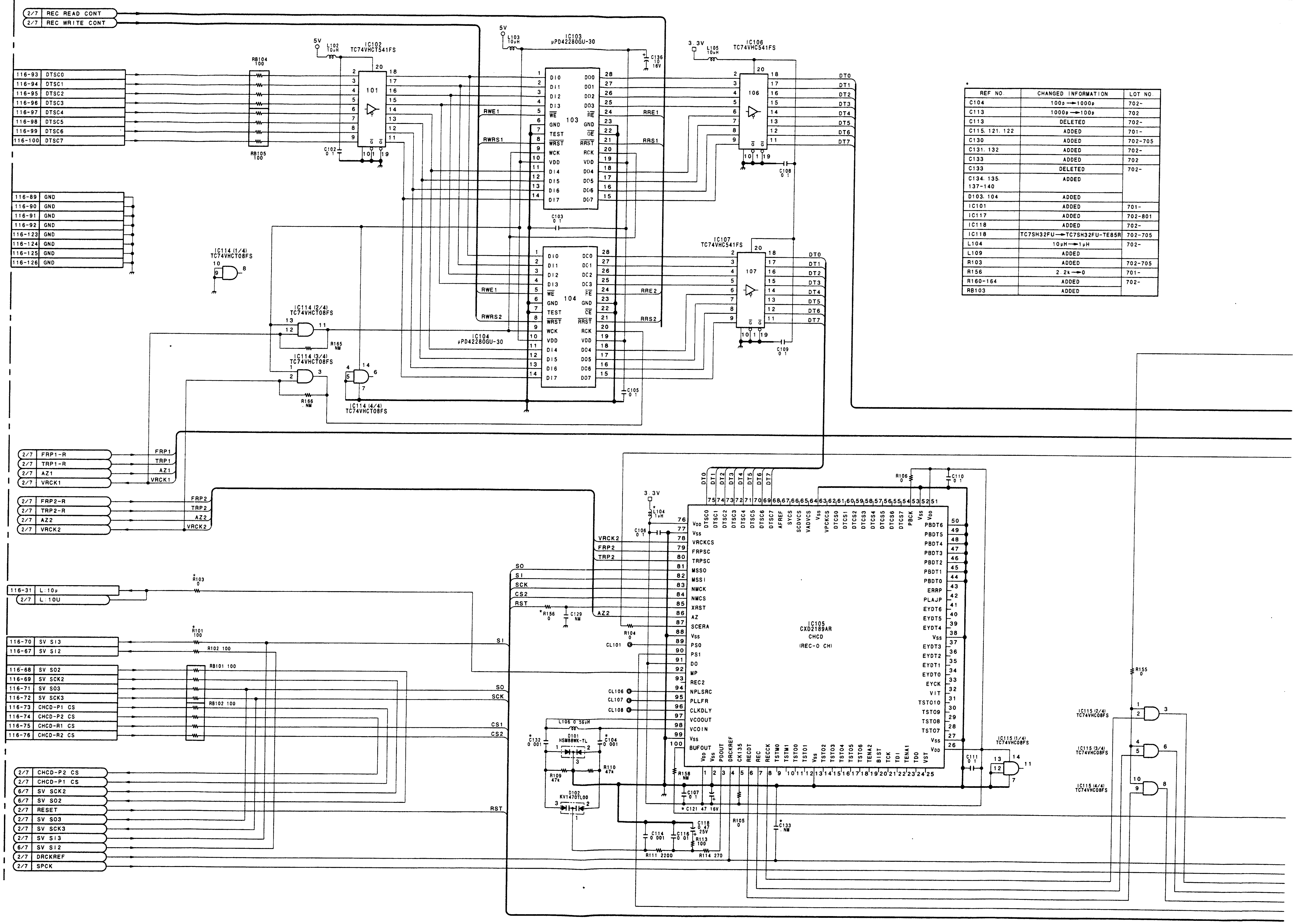

*

REF NO.	CHANGED INFORMATION	LOT NO.
C104	100p → 1000p	702-
C113	1000p → 100p	702
C113	DELETED	702-
C115, 121, 122	ADDED	701-
C130	ADDED	702-705
C131, 132	ADDED	702-
C133	ADDED	702
C133	DELETED	702-
C134, 135, 137-140	ADDED	
D103, 104	ADDED	
IC101	ADDED	701-
IC117	ADDED	702-801
IC118	ADDED	702-
IC118	TC7SH32FU → TC7SH32FU-TE85R	702-705
L104	10μH → 1μH	702-
L109	ADDED	
R103	ADDED	702-705
R156	2.2k → 0	701-
R160-164	ADDED	702-
RB103	ADDED	

DSR-80/80P

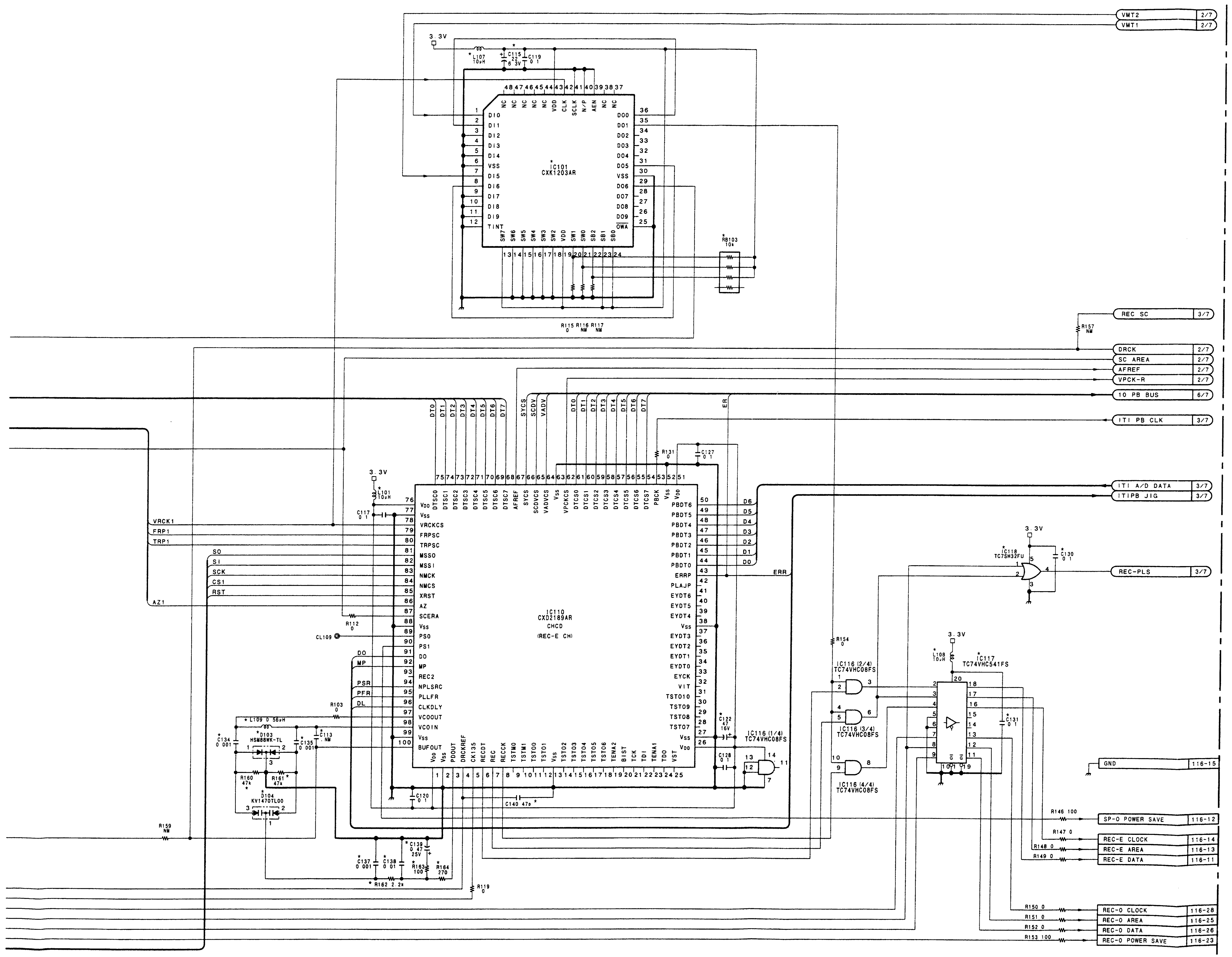

RP-101 (1/7)

BOARD SUFFIX : -11, 12
MODEL DSR-80/80P

RP-101 (2/7): REC/PB HEAD AMP, RF A/D

DSR-80/80P

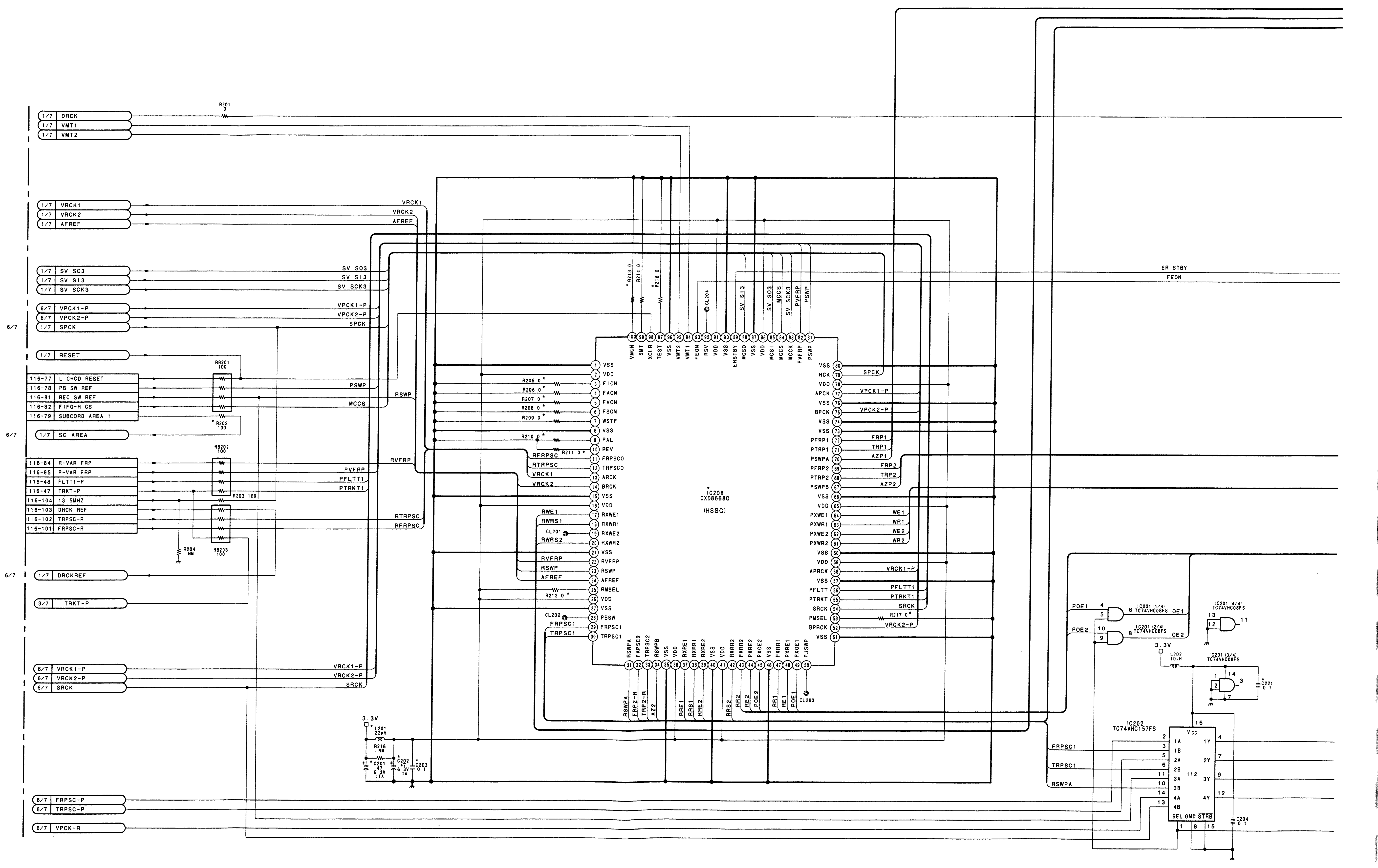

1 2 3 4 5

A | B | C | D | E | F | G | H

SONY-SP0754 / DRUCK 370

DSR-80/80P

DSR-80/80P

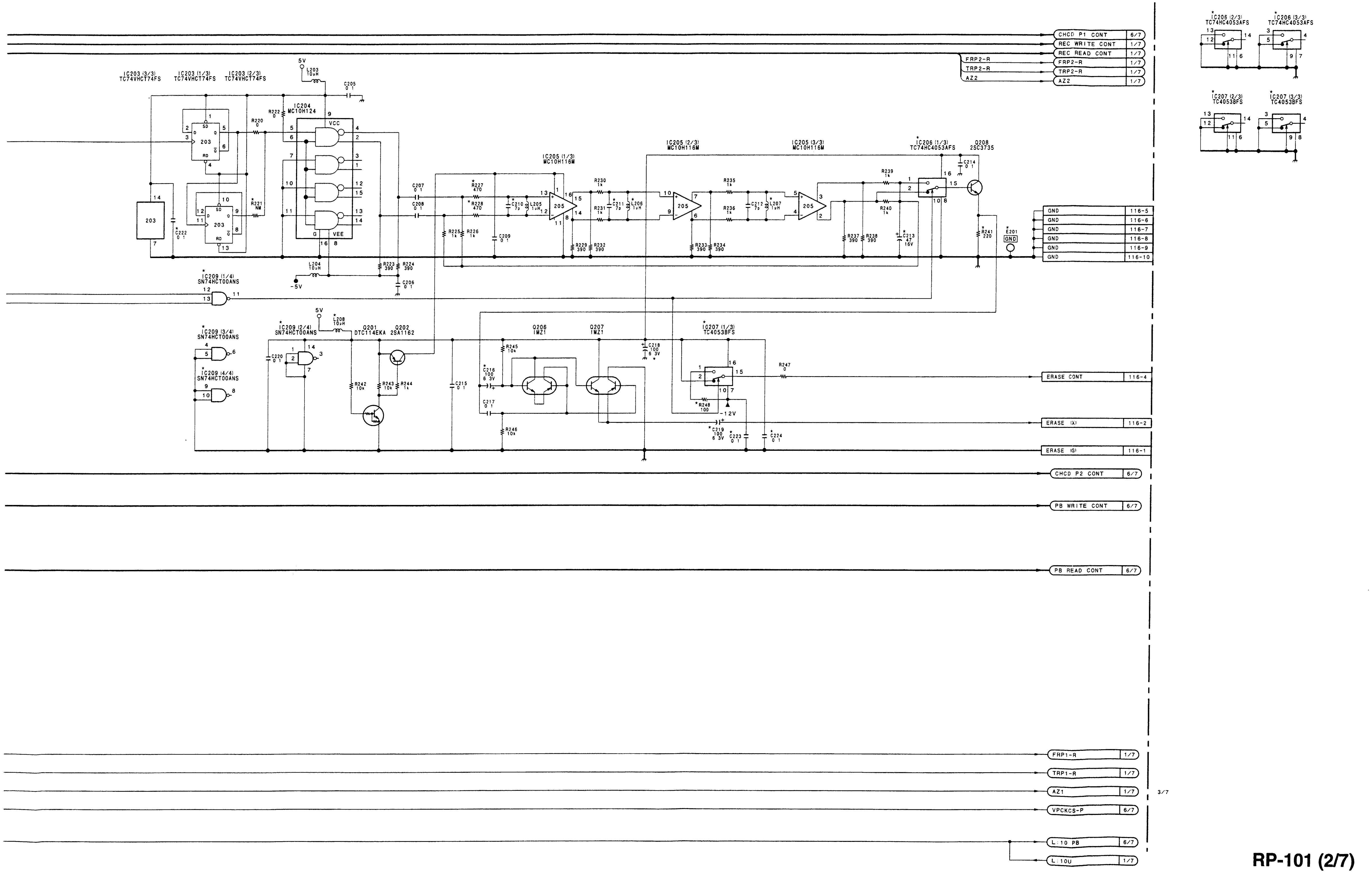

1

2

3

4

5

RP-101 (2/7)

BOARD SUFFIX : -11, 12
MODEL DSR-80/80P

DSR-80/80P

RP-101 (3/7): REC/PB HEAD AMP, RF A/D

RP-101 (3/7)

① TP301 (MODE: 75% Color Bar/PB (NTSC))
② TP303 (MODE: 100% Color Bar/PB (PAL))

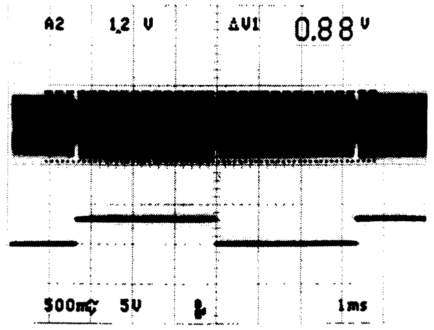

1

2

3

4

5

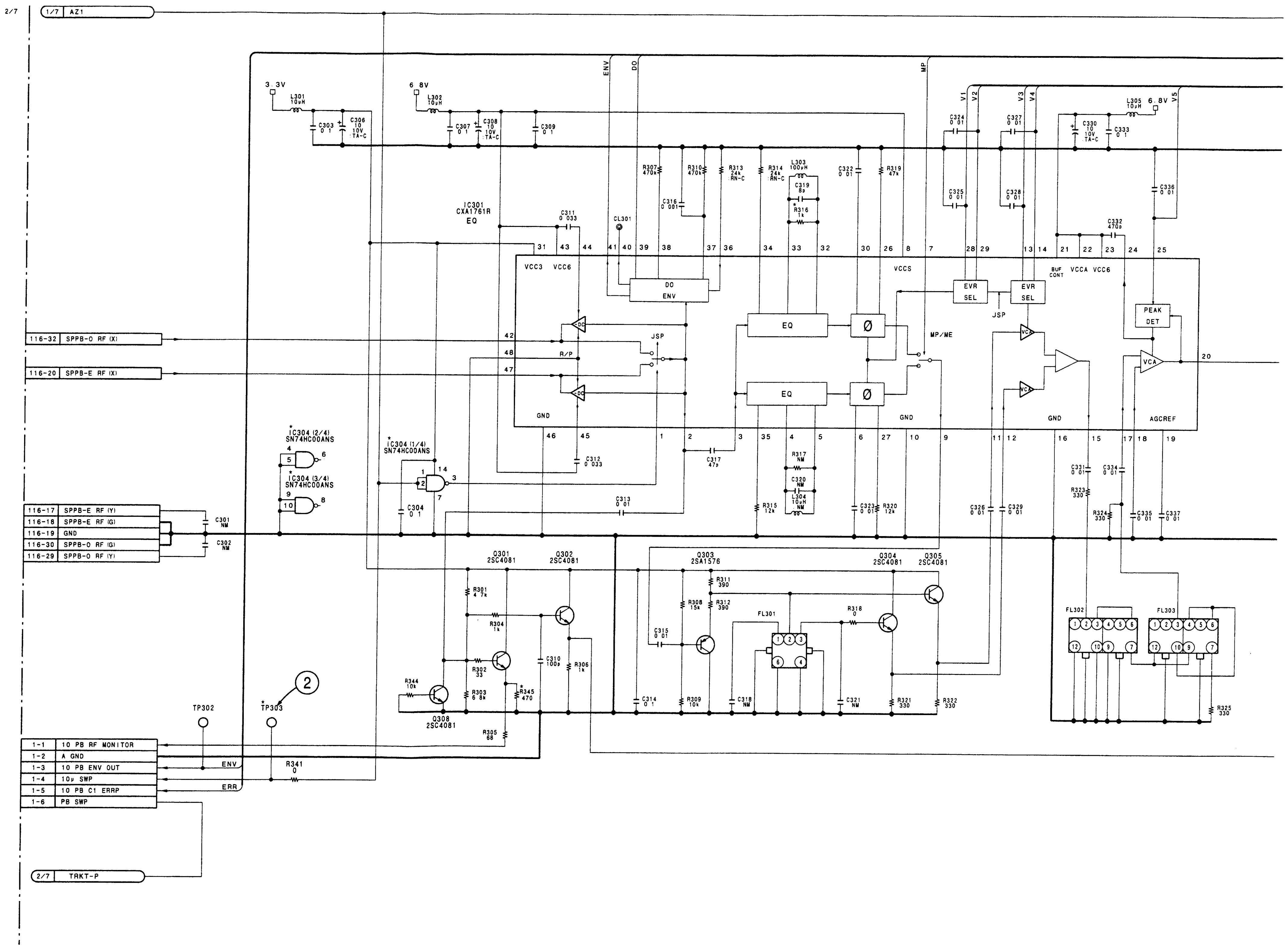

DSR-80/80P

1

2

3

4

5

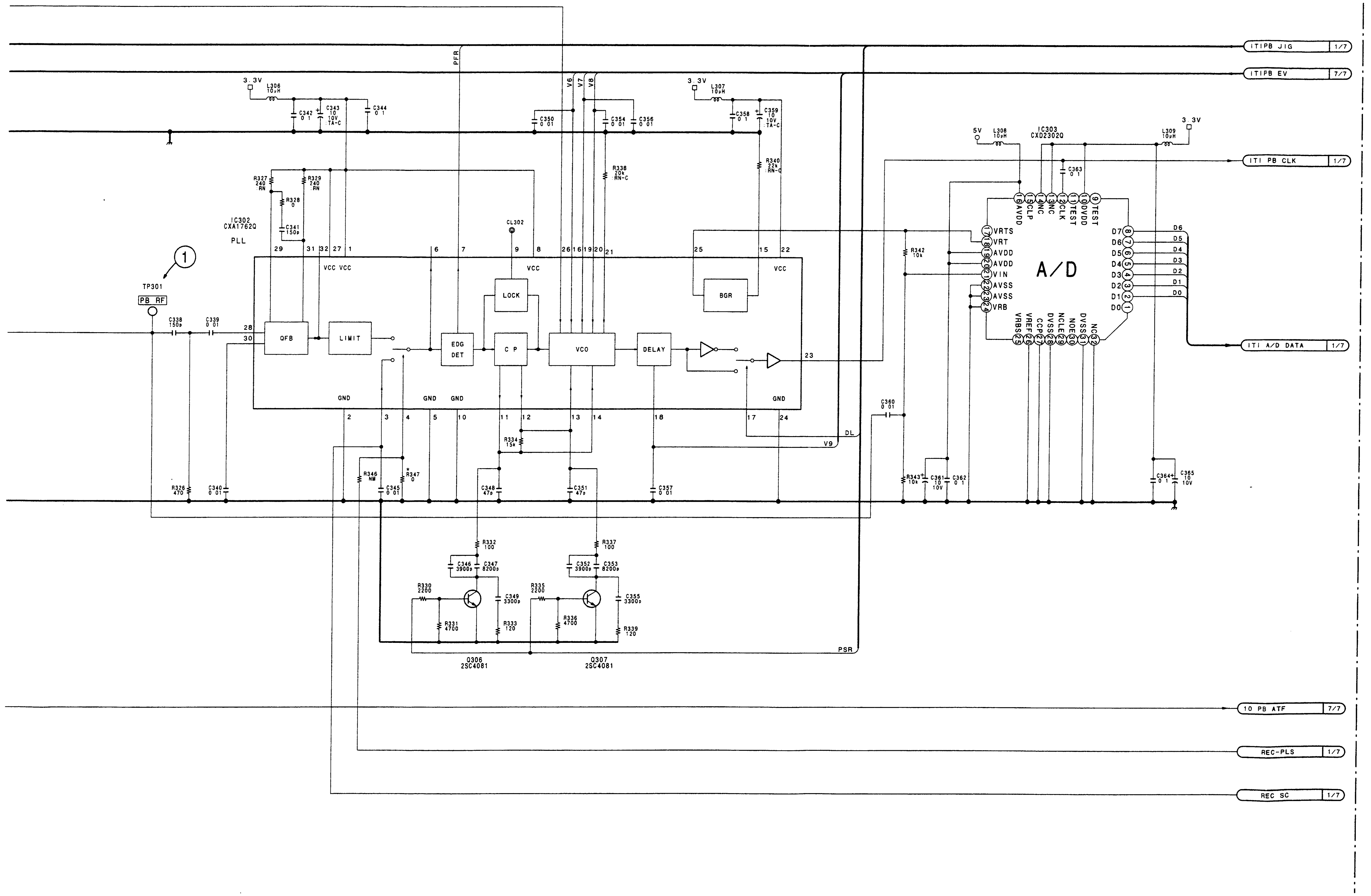

RP-101 (3/7)

BOARD SUFFIX : -11, 12
MODEL DSR-80/80P

RP-101 (4/7): REC/PB HEAD AMP, RF A/D

1
2
3
4
5

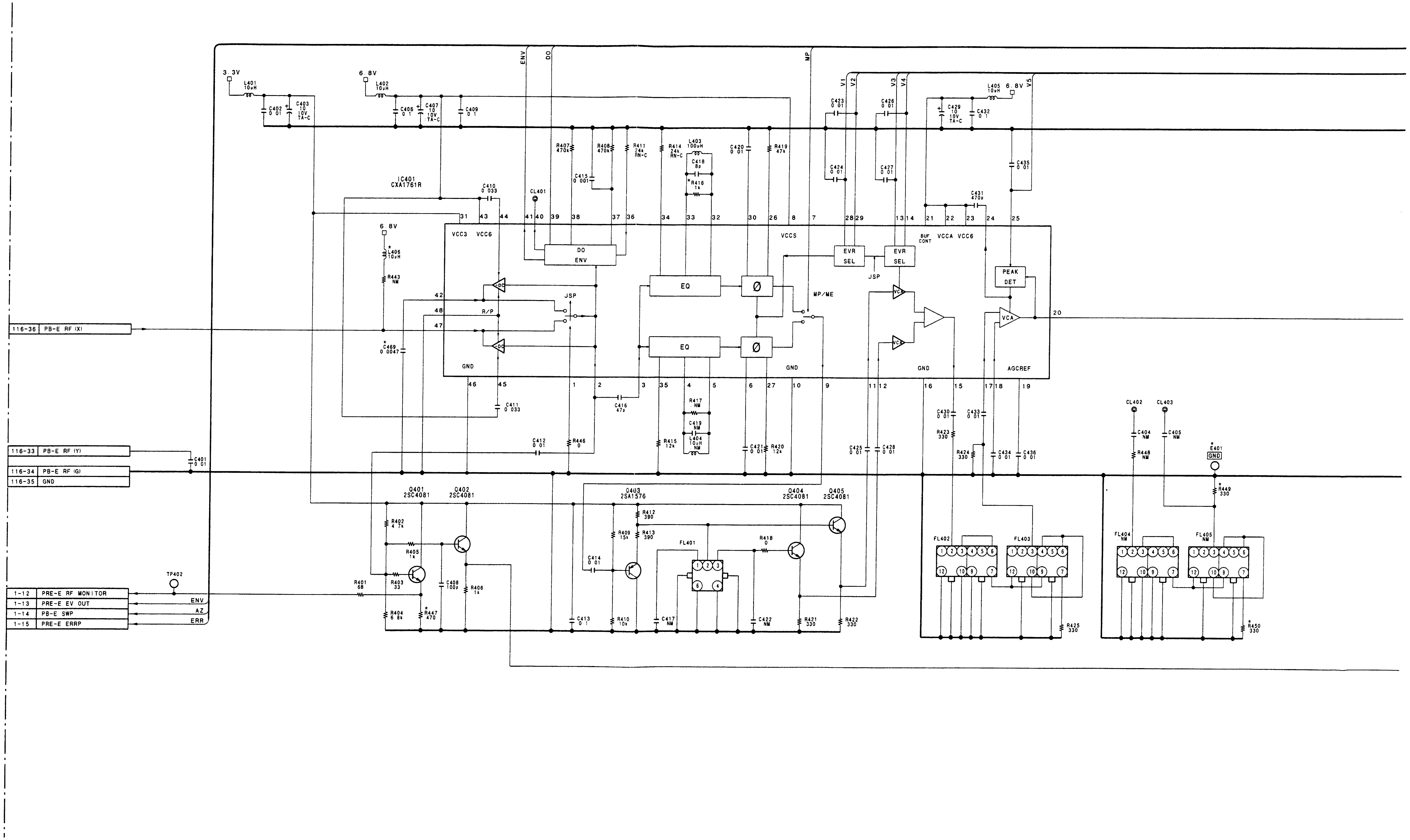

SONY-SP0754 / DRUCK 374

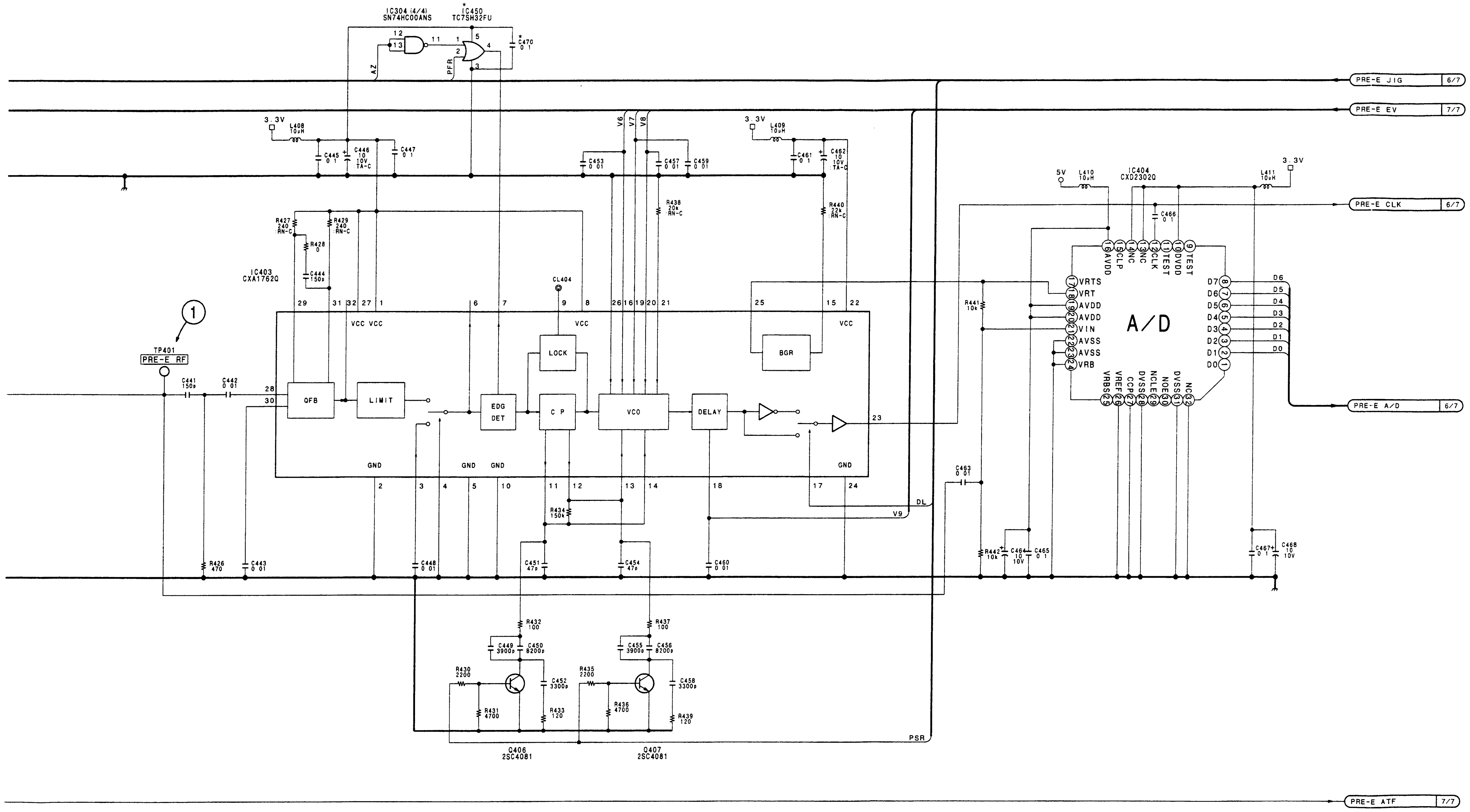

① TP401 MODE: 75% Color Bar/PB (NTSC)
① TP501 MODE: 100% Color Bar/PB (PAL)
② TP303

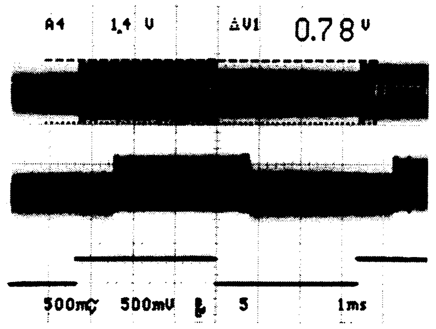

RP-101 (4/7)

BOARD SUFFIX : -11, 12
MODEL DSR-80/80P

RP-101 (5/7): REC/PB HEAD AMP, RF A/D

DSR-80/80P

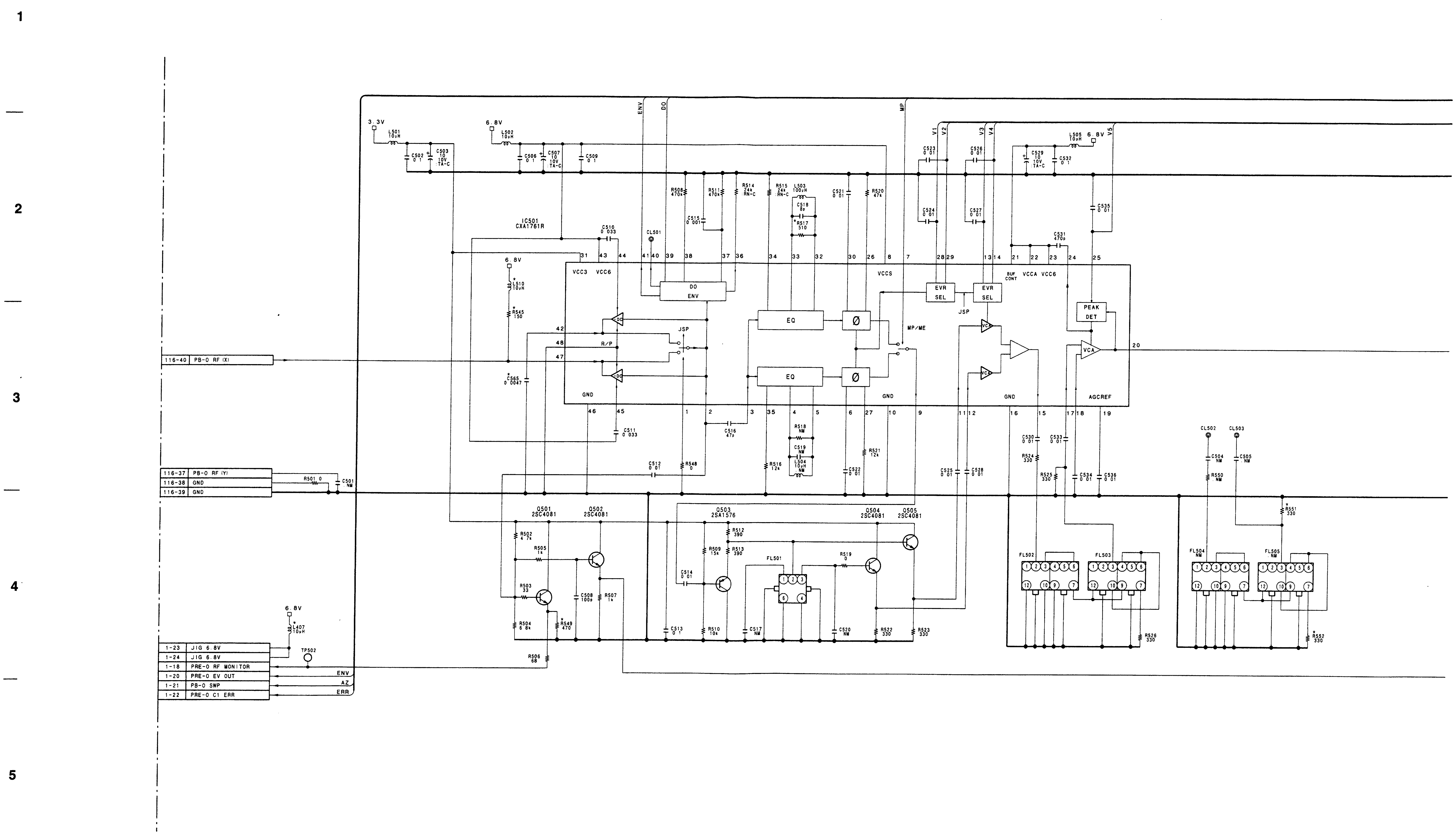

A B C D E F G H

DSR-80/80P

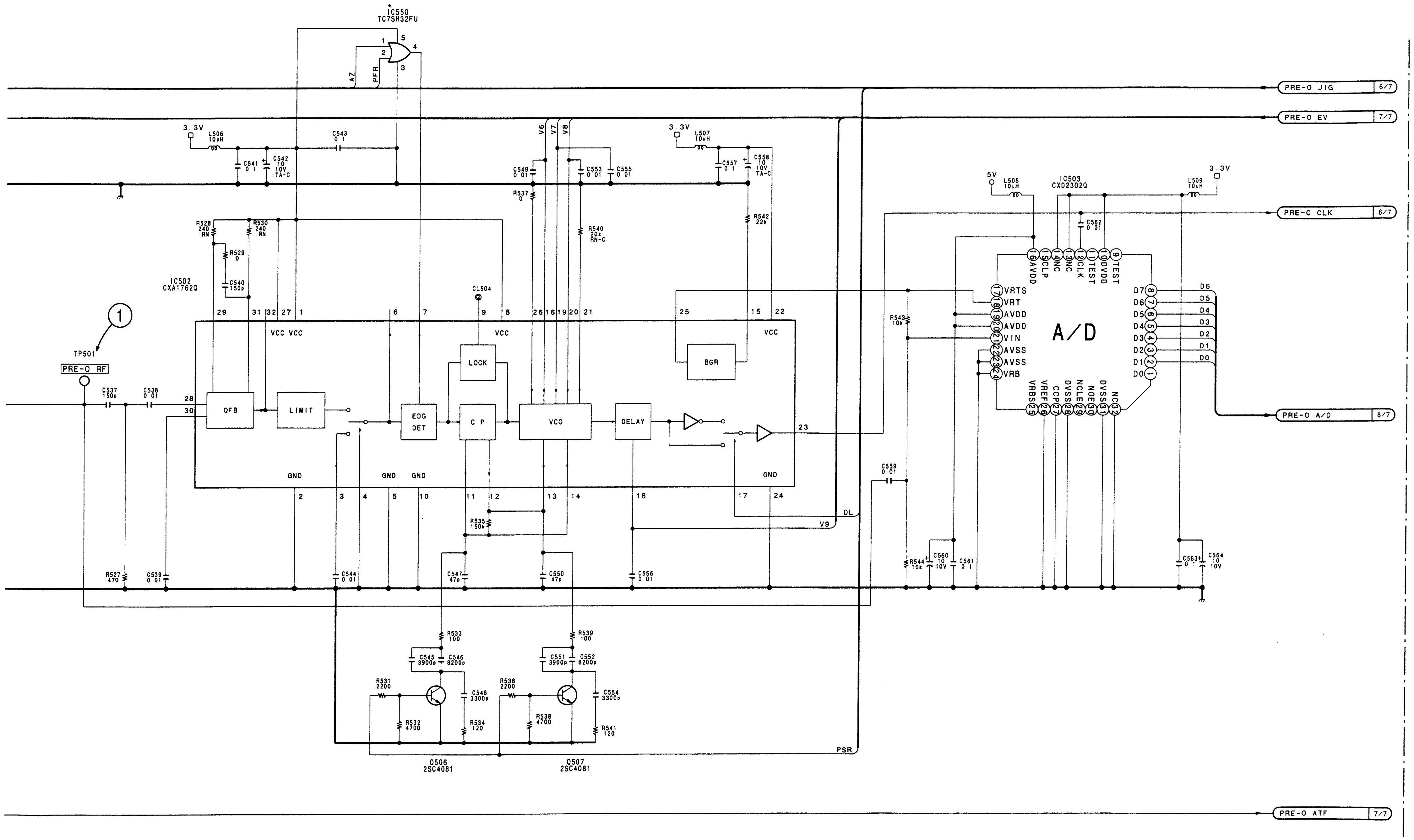

① TP401 MODE: 75% Color Bar/PB (NTSC)
① TP501 MODE: 100% Color Bar/PB (PAL)
② TP303

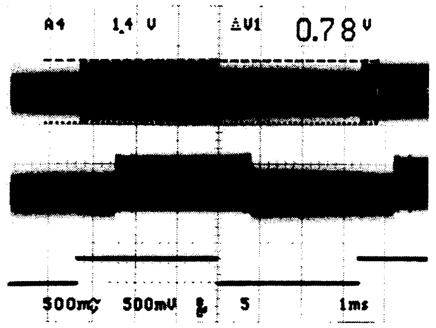

RP-101 (5/7)
BOARD SUFFIX : -11, 12
MODEL DSR-80/80P

RP-101 (6/7): REC/PB HEAD AMP, RF A/D

DSR-80/80P

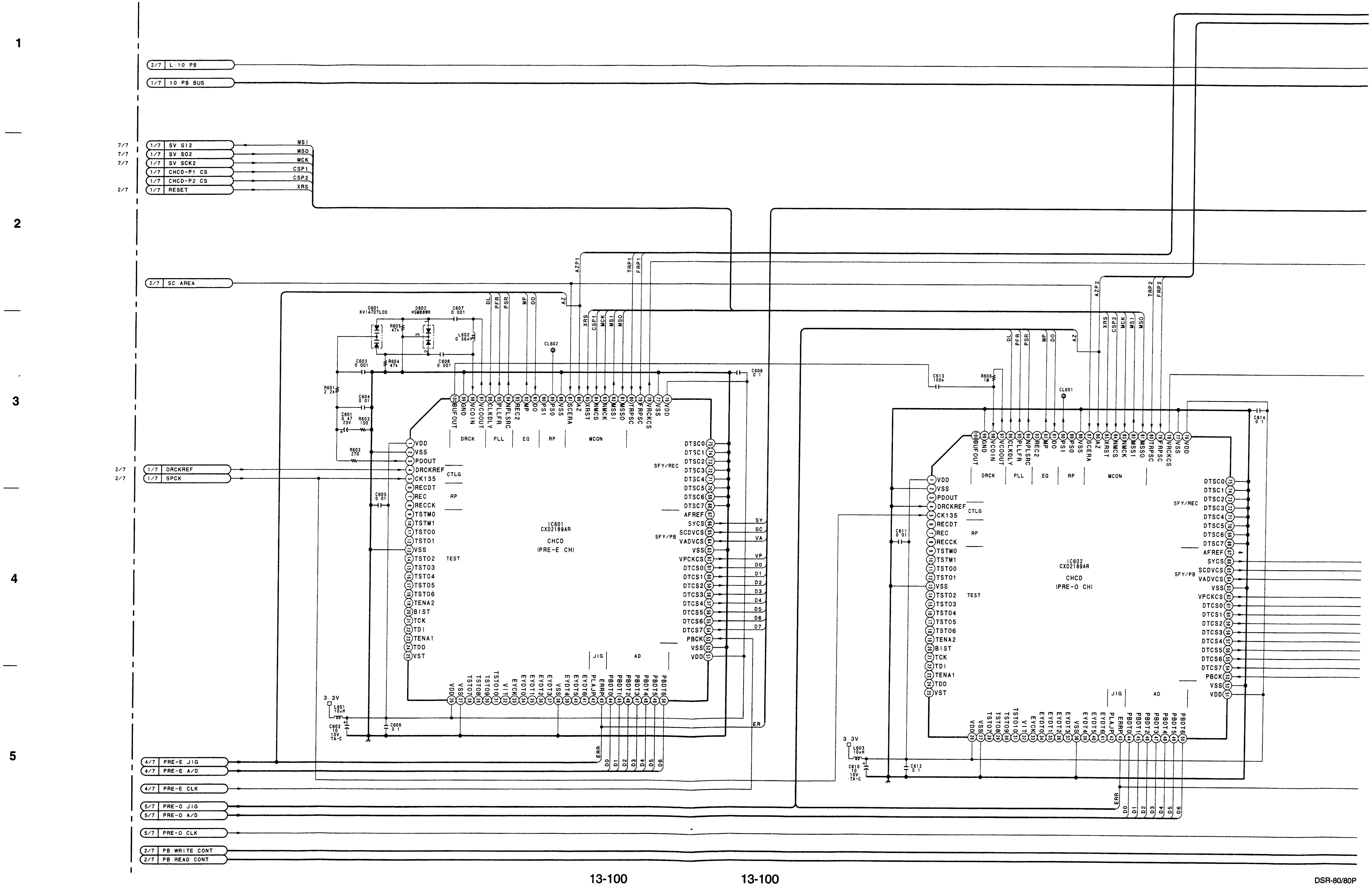

A B C D E F G H

SONY-SP0754 / DRUCK 378

DSR-80/80P

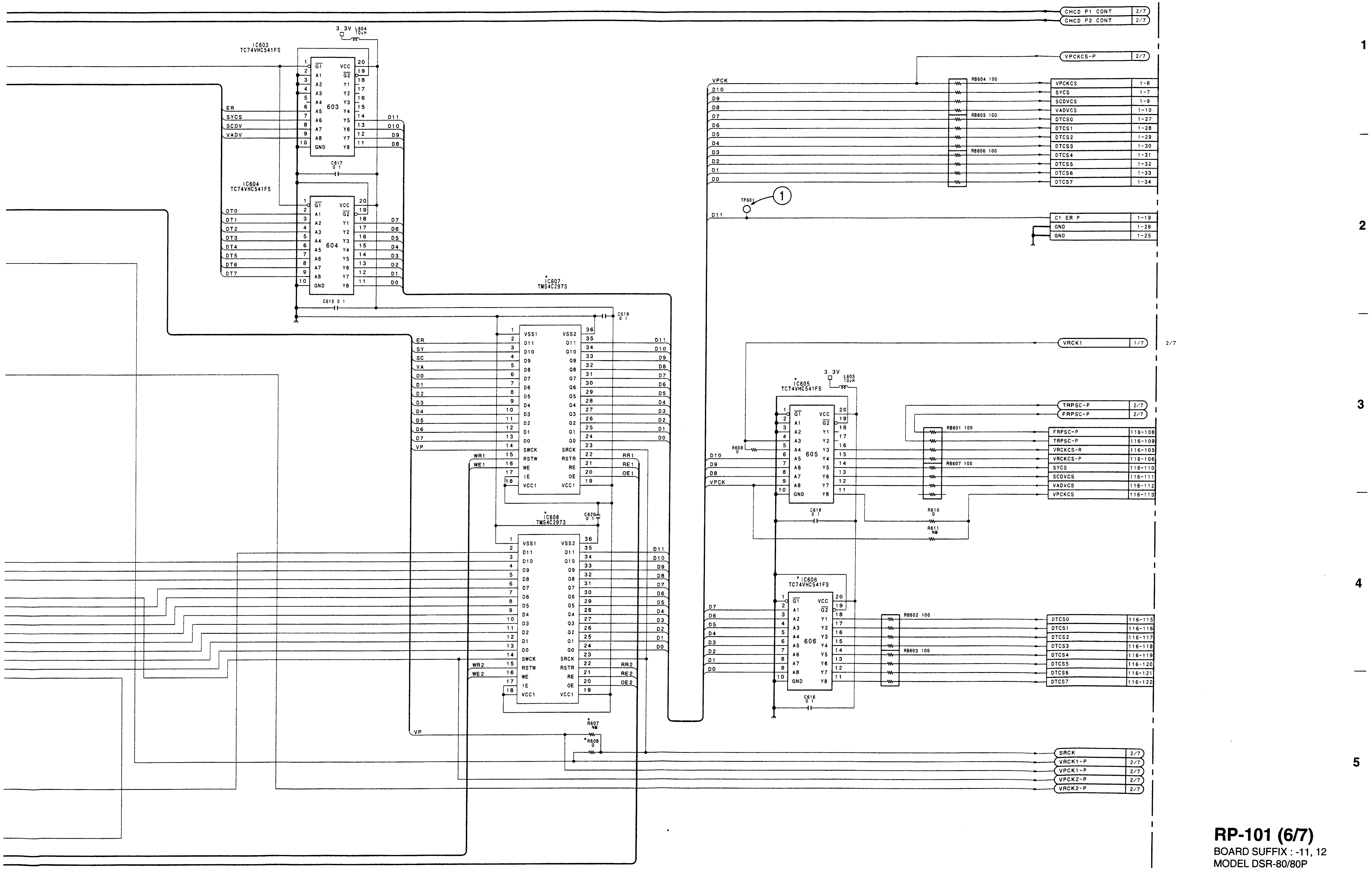

RP-101 (6/7)

BOARD SUFFIX : -11, 12
MODEL DSR-80/80P

RP-101 (7/7): REC/PB HEAD AMP, RF A/D

DSR-80/80P

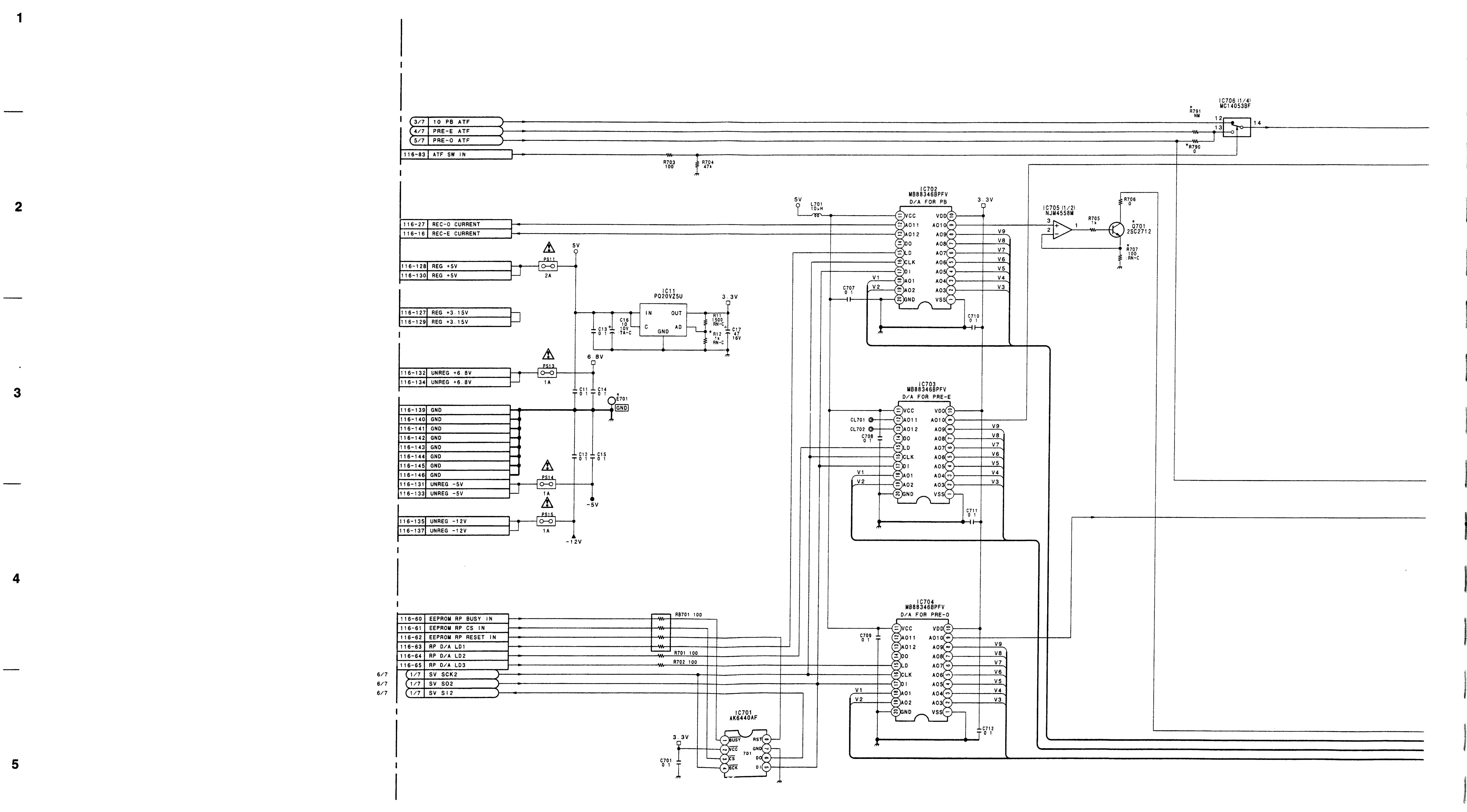

1

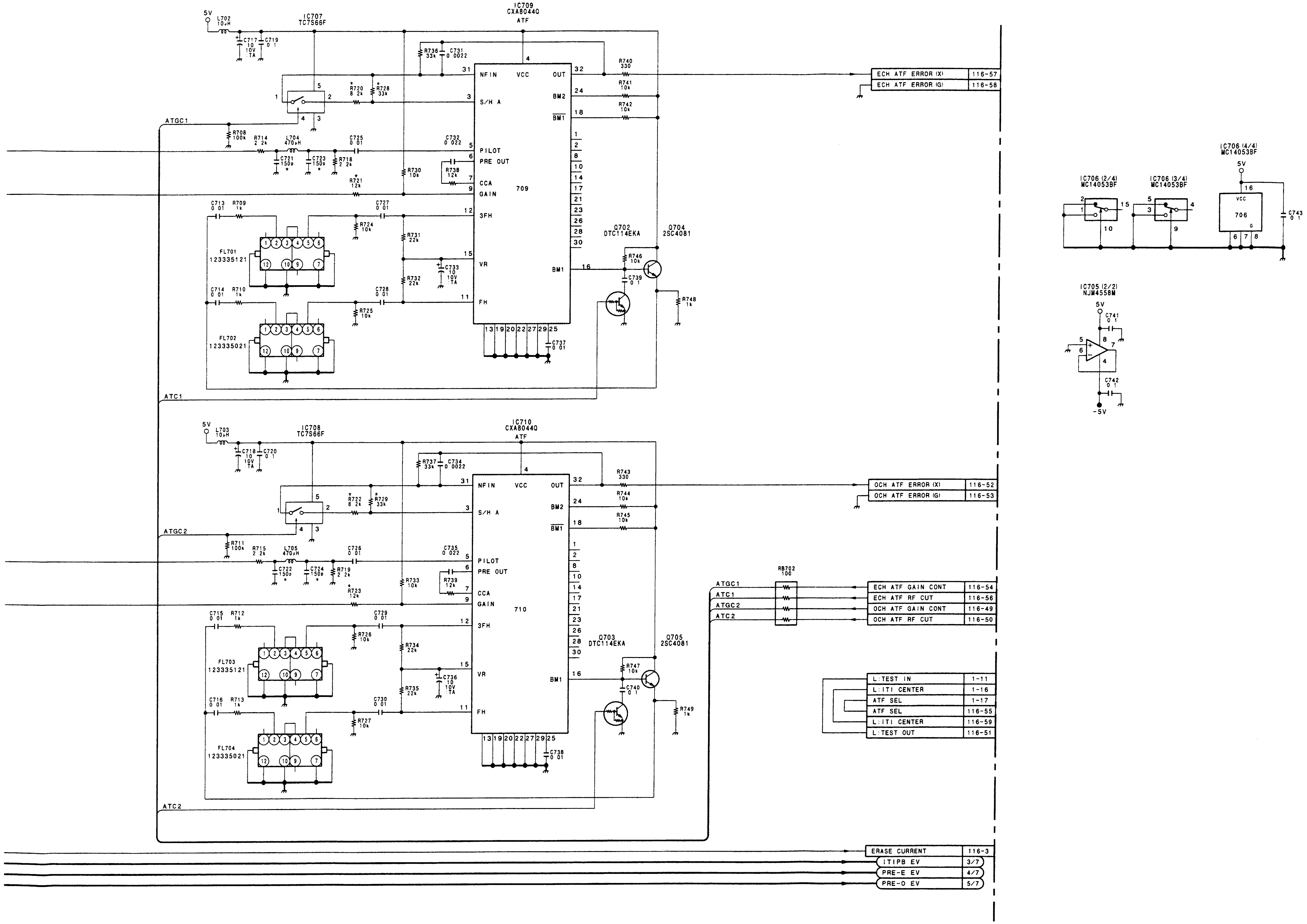

2

3

4

5

RP-101 (7/7)
BOARD SUFFIX : -11, 12
MODEL DSR-80/80P

RP-103 (1/2): HEAD AMP

DSR-60/60P

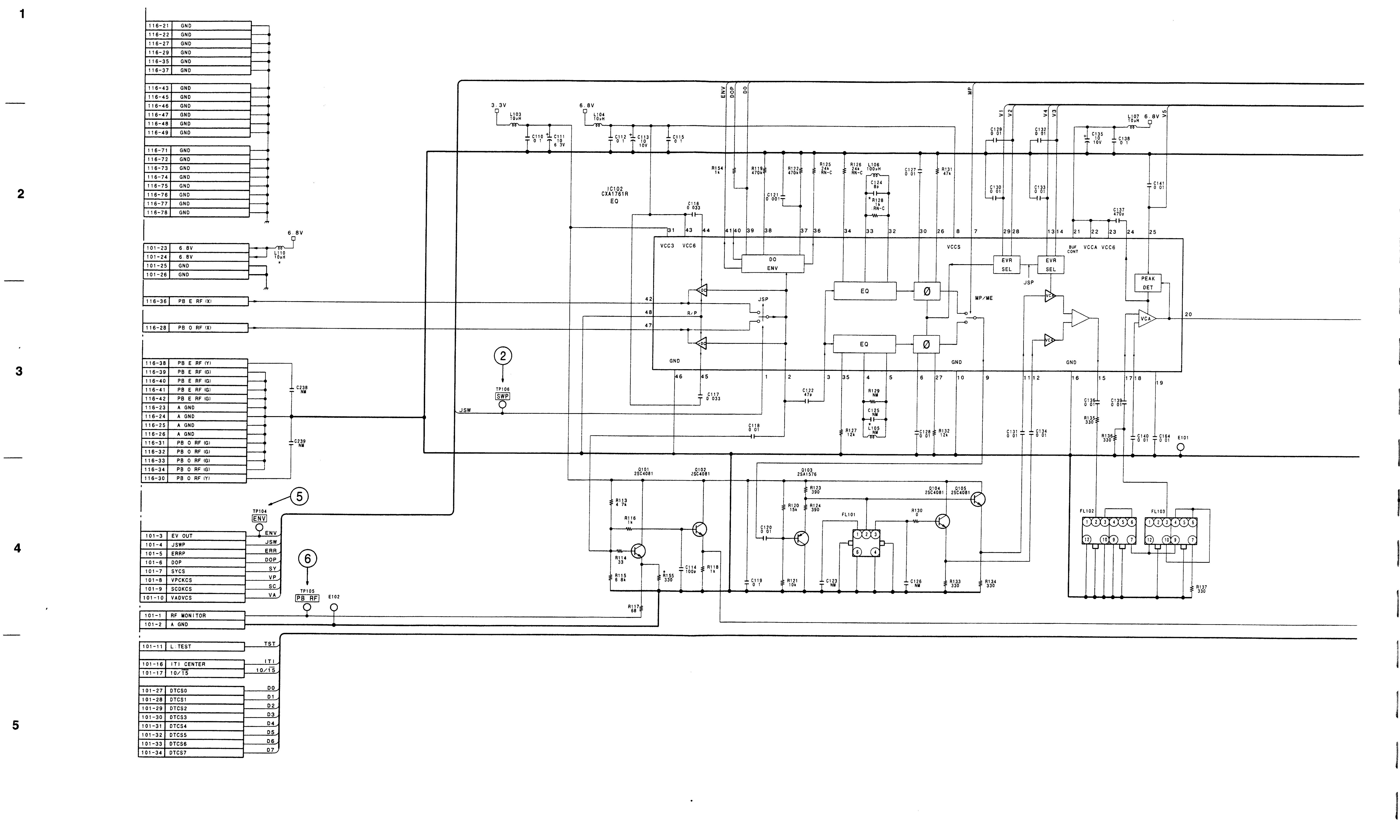

A B C D E F G H

SONY-SP0754 / DRUCK 382

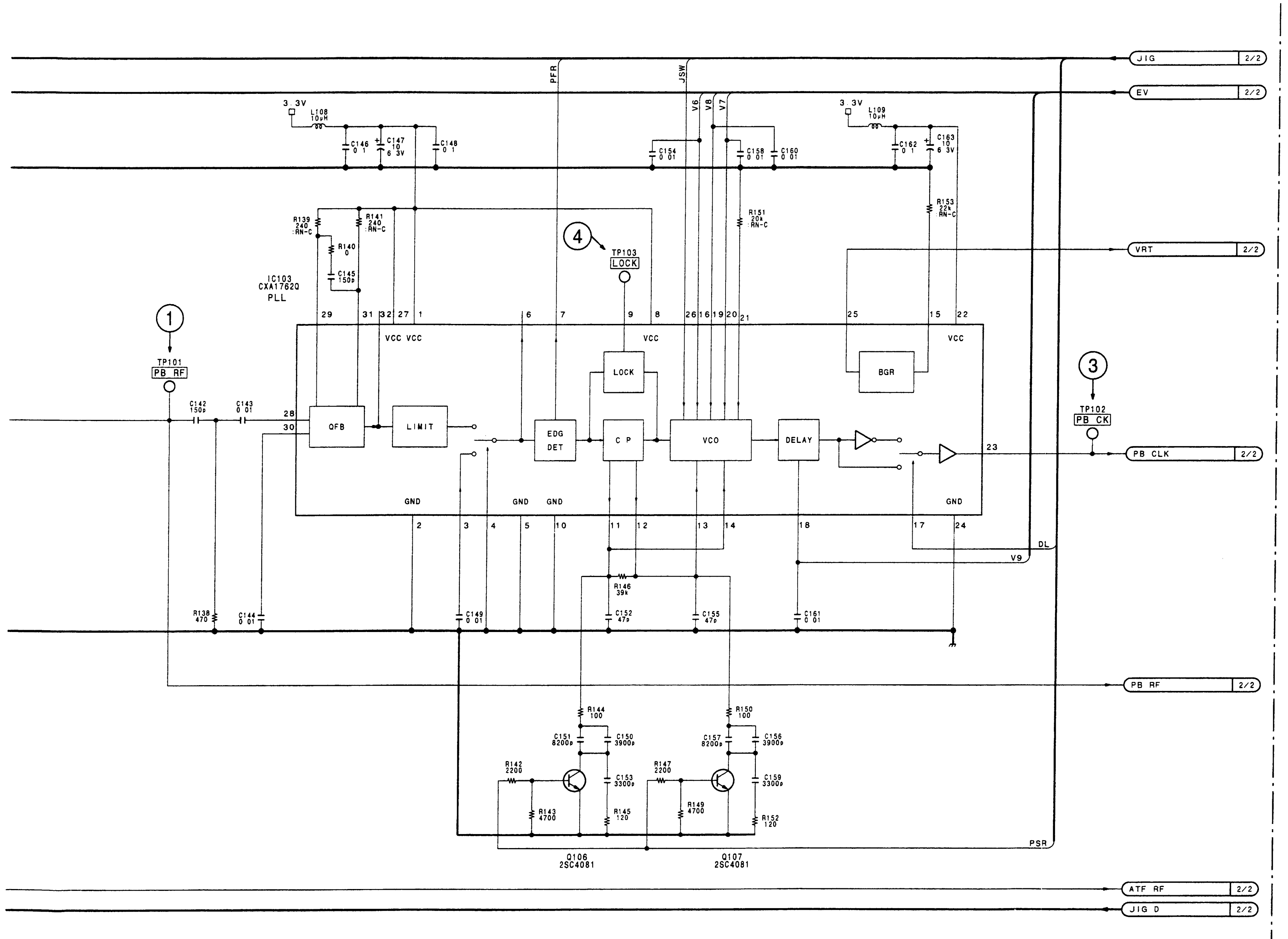

REF NO.	CHANGED INFORMATION	LOT NO.
L105	DELETED	610-
L110	ADDED	
R128	1k → 510	
R128	510 → 1k	701-
R155	220 → 330	610-

① TP101 (MODE: 75% Color Bar/PB (NTSC))
② TP106 (MODE: 100% Color Bar/PB (PAL))

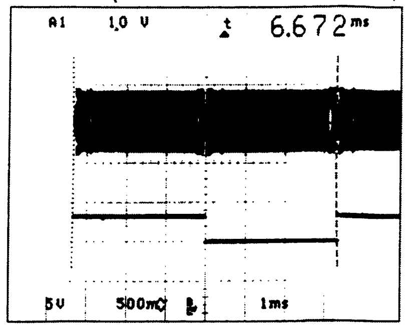

⑤ TP104 MODE: 75% Color Bar/PB (NTSC)
MODE: 100% Color Bar/PB (PAL)

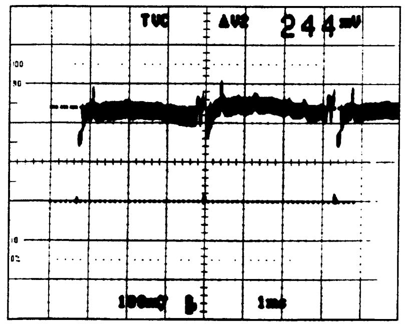

③ TP102 MODE: 75% Color Bar/PB (NTSC)
MODE: 100% Color Bar/PB (PAL)

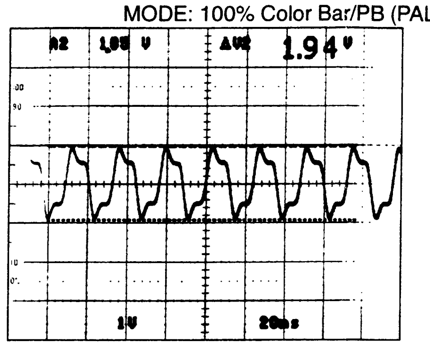

⑥ TP105 (MODE: 75% Color Bar/PB (NTSC))
② TP106 (MODE: 100% Color Bar/PB (PAL))

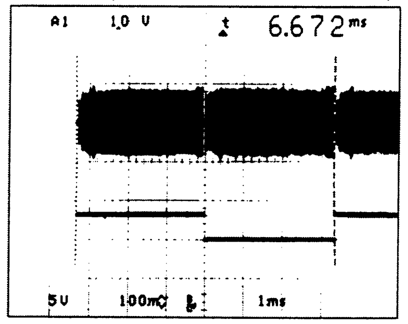

④ TP103 (MODE: 75% Color Bar/PB (NTSC))
② TP106 (MODE: 100% Color Bar/PB (PAL))

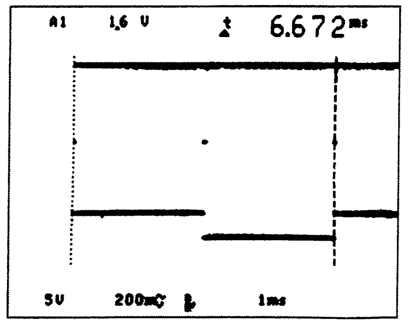

RP-103 (1/2)
MODEL DSR-60/60P

RP-103 (2/2): HEAD AMP

DSR-60/60P

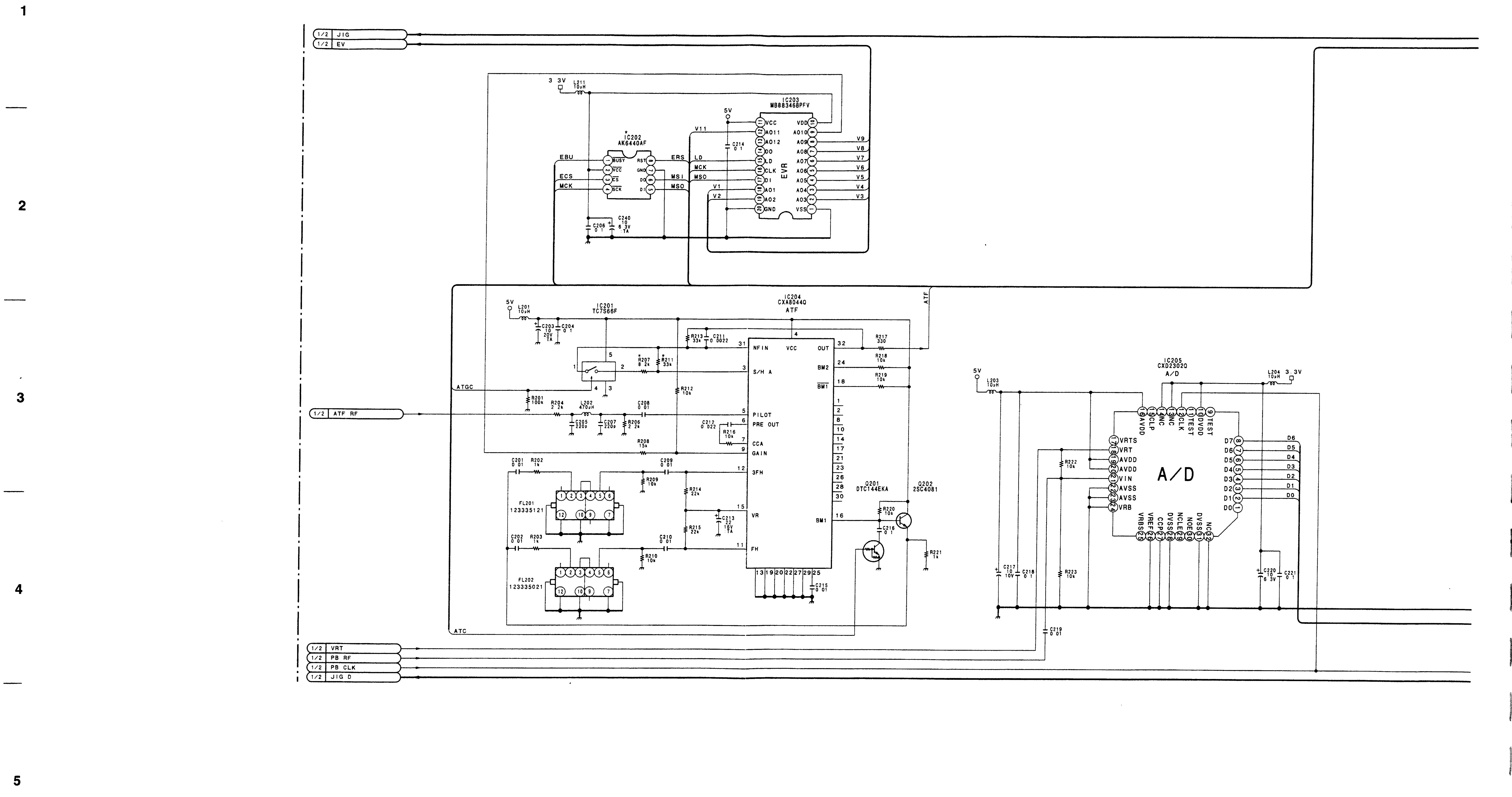

DSR-60/60P

1

2

3

4

5

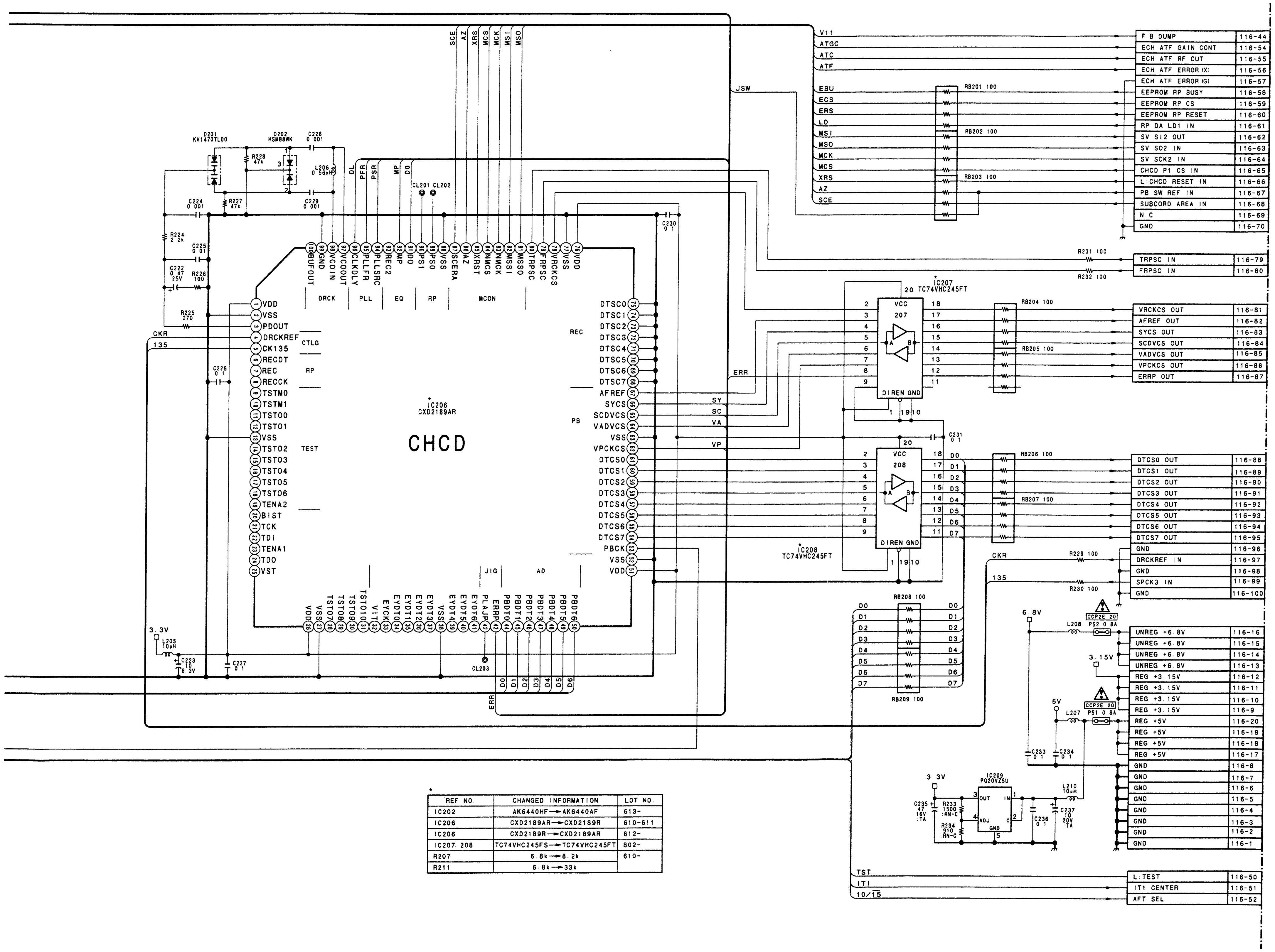

*

REF NO.	CHANGED INFORMATION	LOT NO.
IC202	AK6440HF → AK6440AF	613-
IC206	CXD2189AR → CXD2189R	610-611
IC206	CXD2189R → CXD2189AR	612-
IC207. 208	TC74VHC245FS → TC74VHC245FT	802-
R207	6.8k → 8.2k	610-
R211	6.8k → 33k	

RP-103 (2/2)
MODEL DSR-60/60P

SDI-26A (1/6): QSDI OUTPUT INTERFACE (DSR-60/60P)
SDI-26 (1/6): QSDI INPUT/OUTPUT INTERFACE (DSR-80/80P)

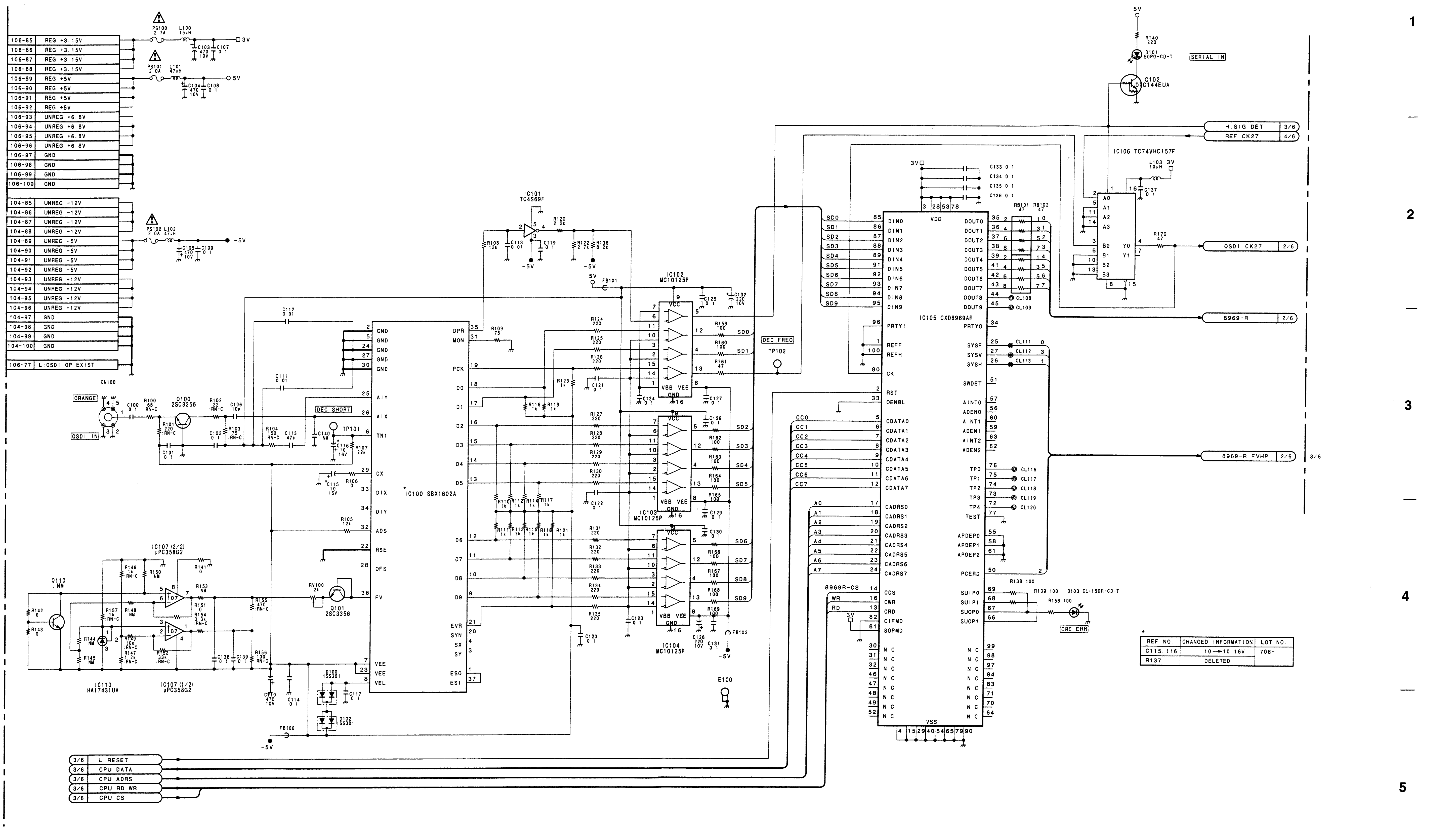

REF NO	CHANGED INFORMATION	LOT NO.
C115, 116	10 → 10 16V	706-
R137	DELETED	

SDI-26/26A (1/6)
BOARD SUFFIX : -13
MODEL DSR-80/80P/60/60P
MODEL DSBK-110/110P

SDI-26A (2/6): QSDI OUTPUT INTERFACE (DSR-60/60P)
SDI-26 (2/6): QSDI INPUT/OUTPUT INTERFACE (DSR-80/80P)

1

2

3

4

5

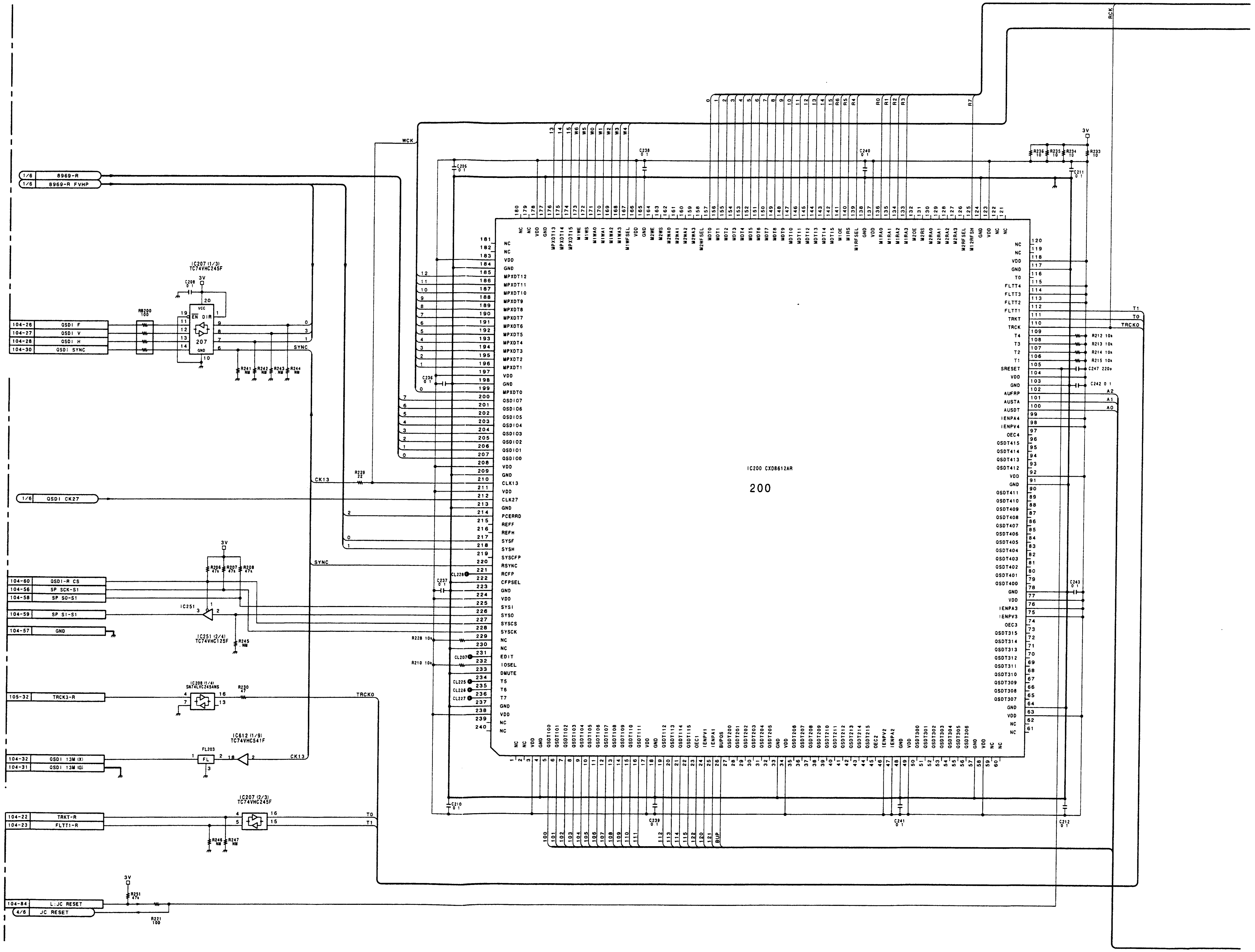

1

2

3

4

5

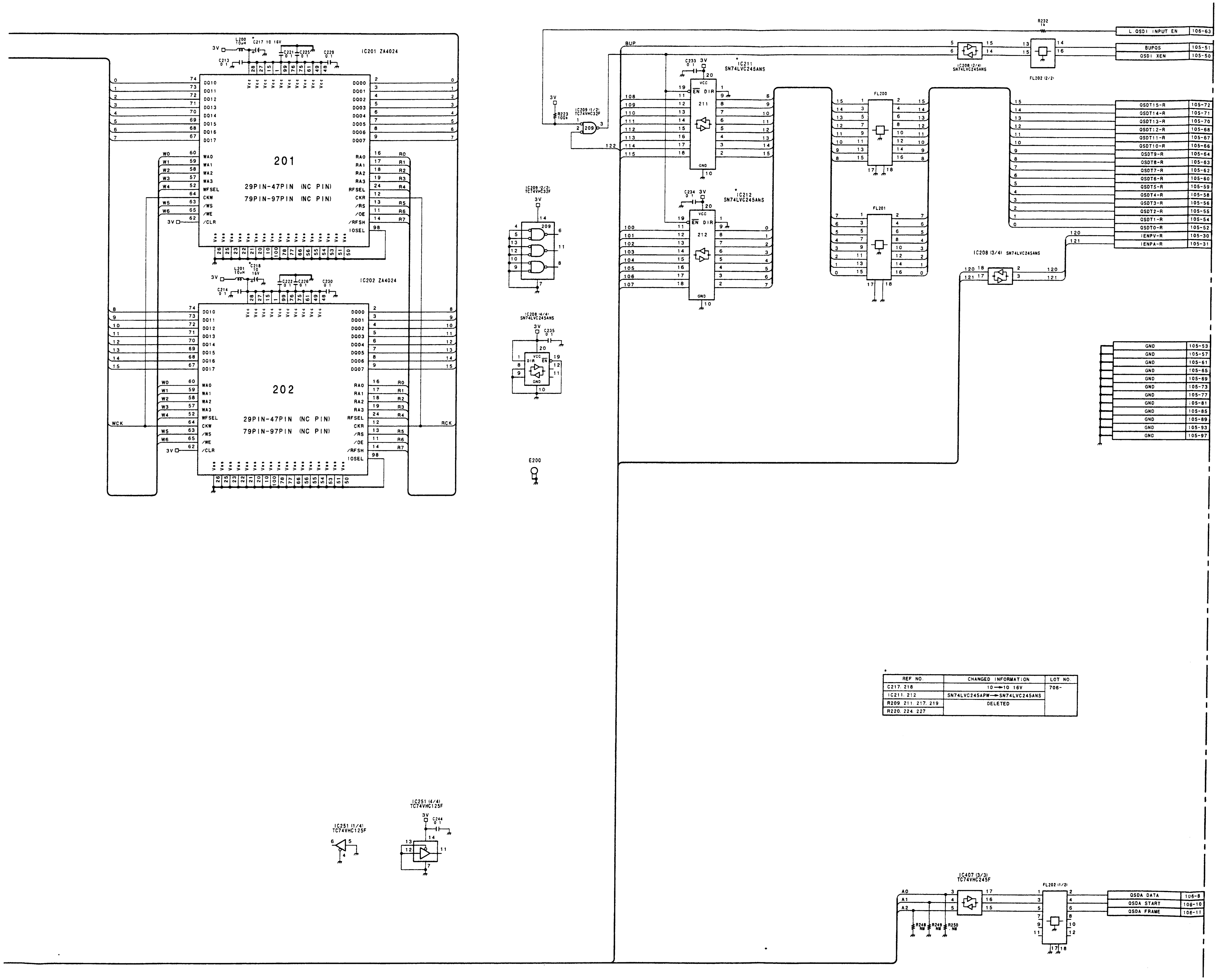

*

REF NO.	CHANGED INFORMATION	LOT NO.
C217, 218	10 → 10 16V	706-
IC211, 212	SN74LVC245APW → SN74LVC245ANS	
R209, 211, 217, 219	DELETED	
R220, 224, 227		

SDI-26/26A (2/6)

BOARD SUFFIX : -13
MODEL DSR-80/80P/60/60P
MODEL DSBK-110/110P

SDI-26A (3/6): QSDI OUTPUT INTERFACE (DSR-60/60P)
SDI-26 (3/6): QSDI INPUT/OUTPUT INTERFACE (DSR-80/80P)

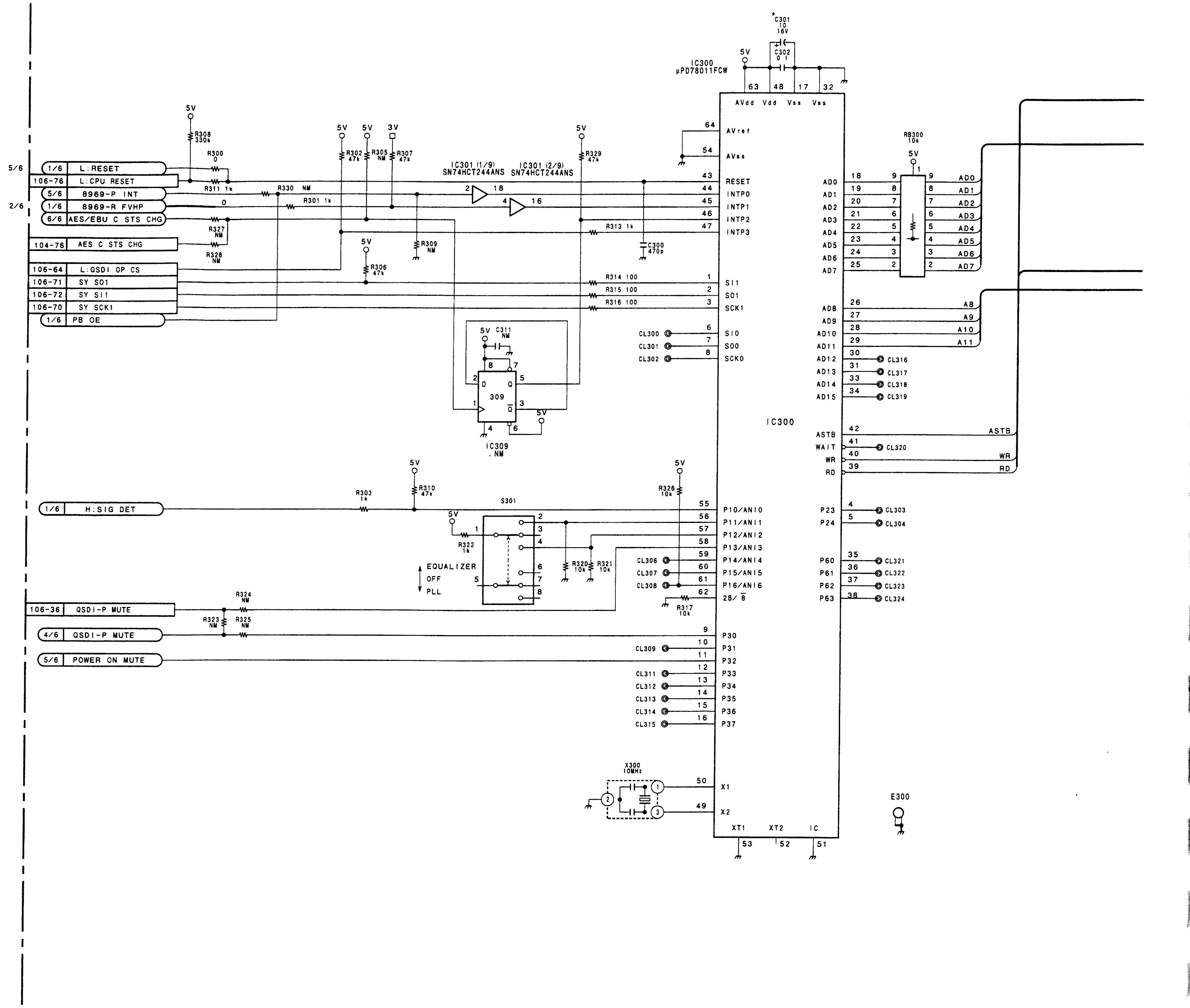

SDI-26/26A (3/6)

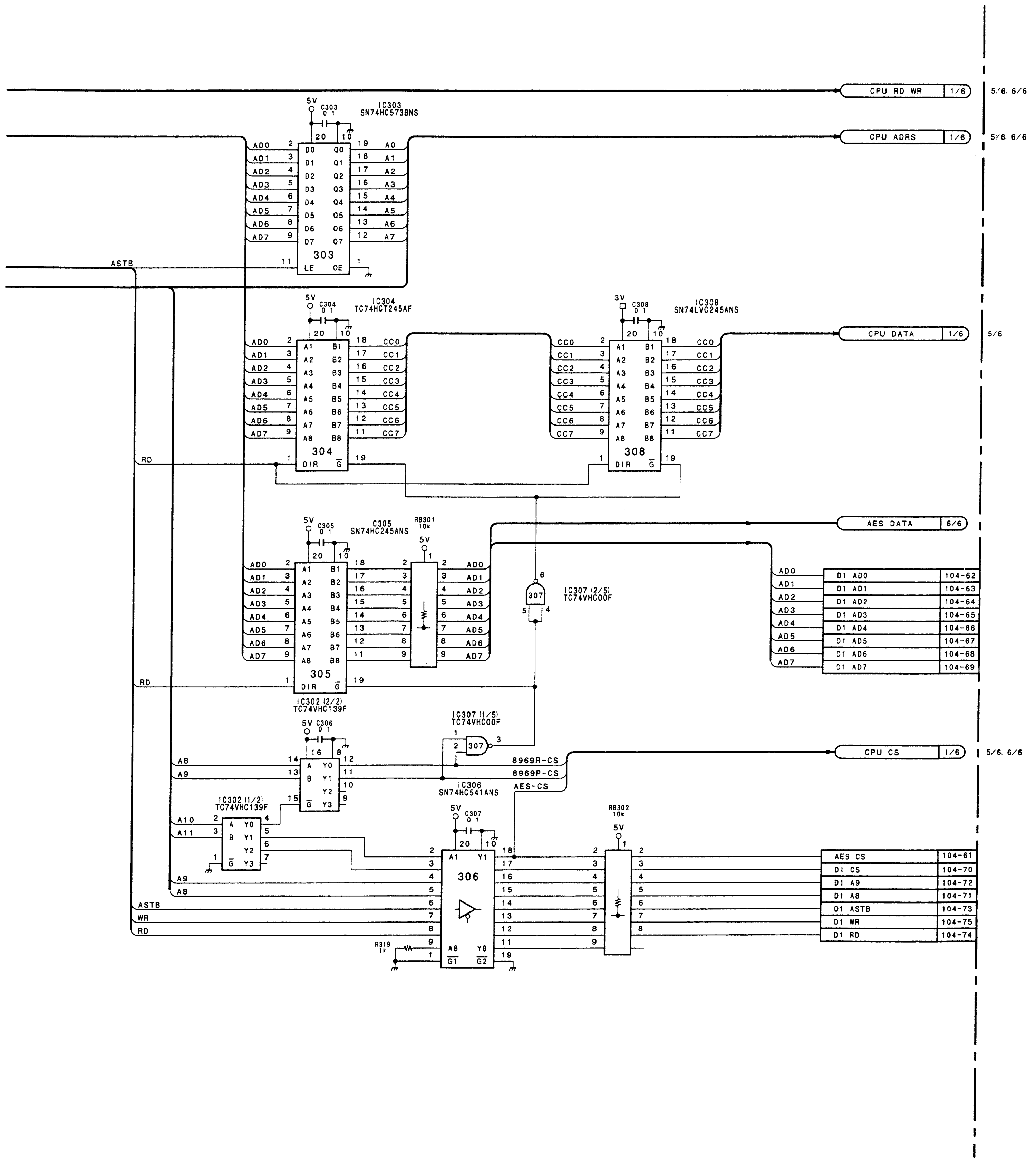

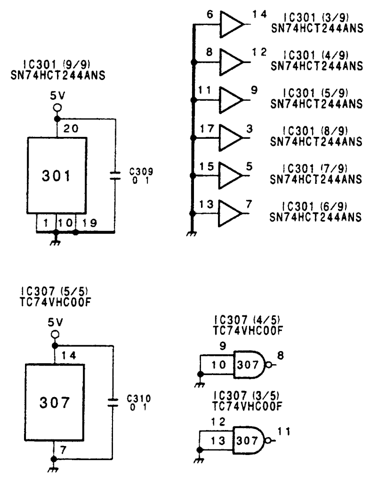

REF NO.	CHANGED INFORMATION	LOT NO.
CN1300	DELETED	802-
R312, 318	DELETED	706-

SDI-26/26A (3/6)
BOARD SUFFIX : -13
MODEL DSR-80/80P/60/60P
MODEL DSBK-110/110P

SDI-26A (4/6): QSDI OUTPUT INTERFACE (DSR-60/60P)
SDI-26 (4/6): QSDI INPUT/OUTPUT INTERFACE (DSR-80/80P)

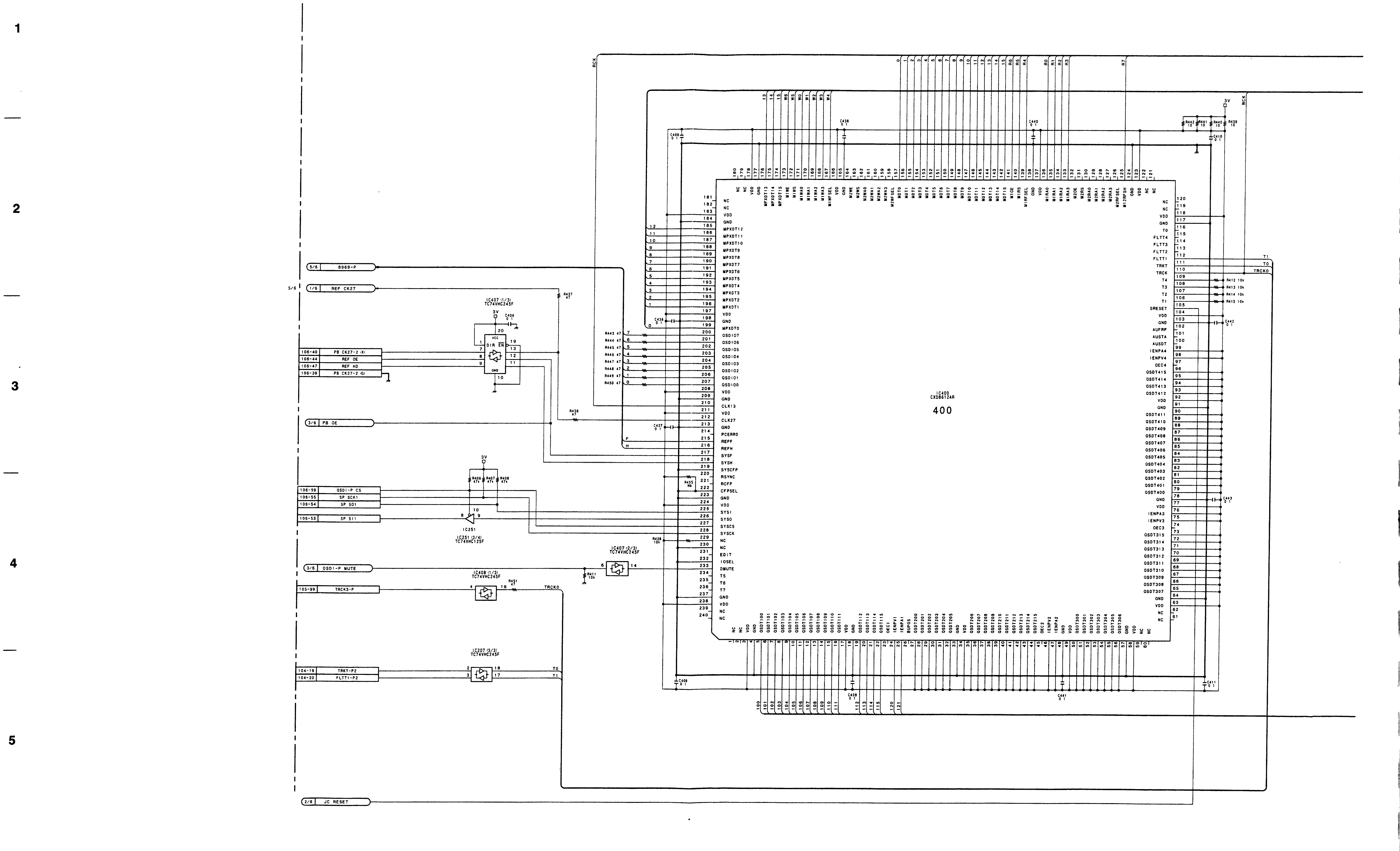

DSR-80/80P/60/60P

A | B | C | D | E | F | G | H

SONY-SP0754 / DRUCK 392

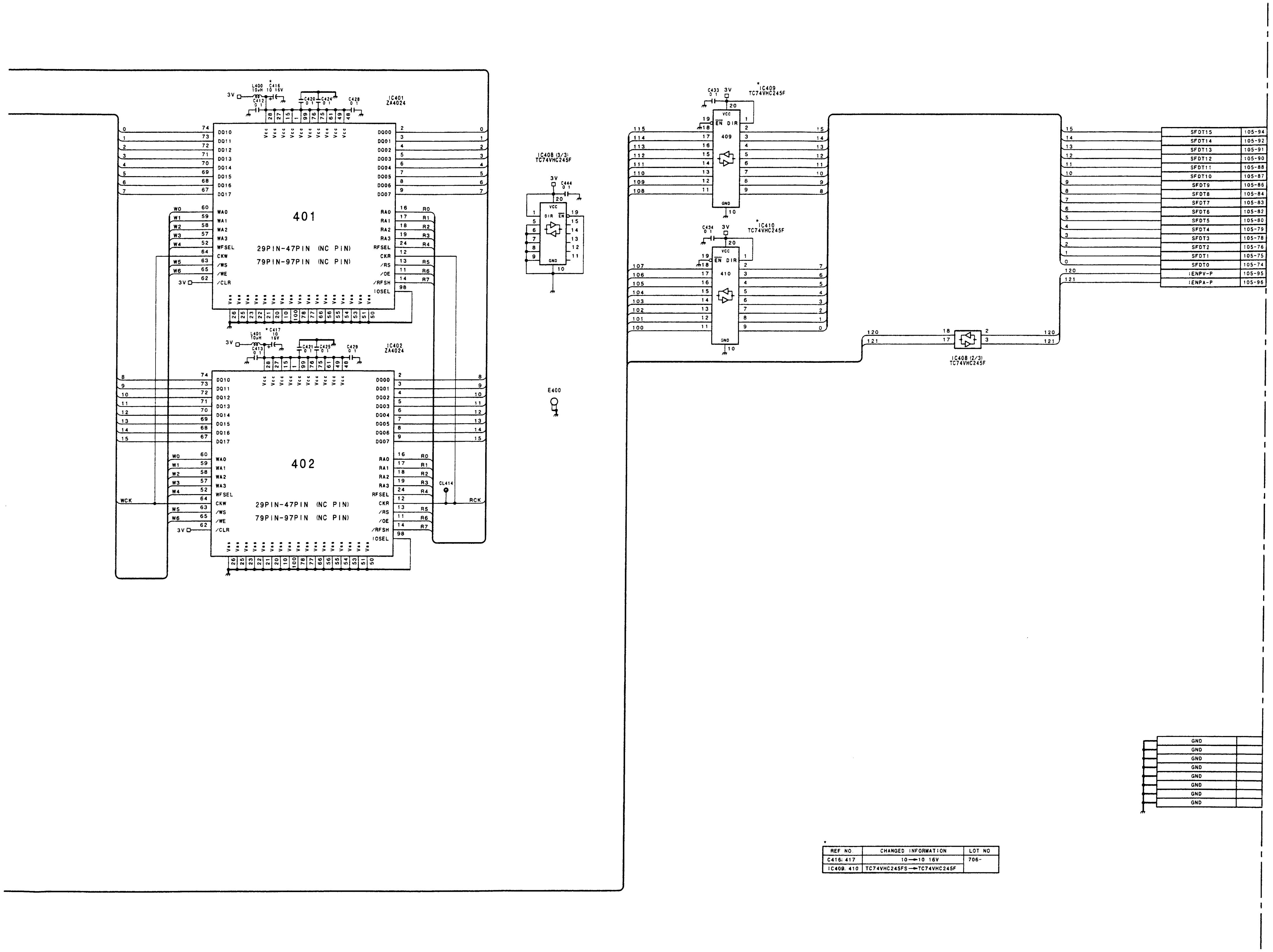

REF NO.	CHANGED INFORMATION	LOT NO
C416, 417	10 → 10 16V	706-
IC409, 410	TC74VHC245FS → TC74VHC245F	

1 — 2 — 3 — 4 — 5

SDI-26/26A (4/6)

BOARD SUFFIX : -13
MODEL DSR-80/80P/60/60P
MODEL DSBK-110/110P

 SDI-26/26A

SDI-26A: QSDI OUTPUT INTERFACE (DSR-60/60P)
SDI-26: QSDI INPUT/OUTPUT INTERFACE (DSR-80/80P)

① TP502 MODE: 75% Color Bar/PB (NTSC)
MODE: 100% Color Bar/PB (PAL)

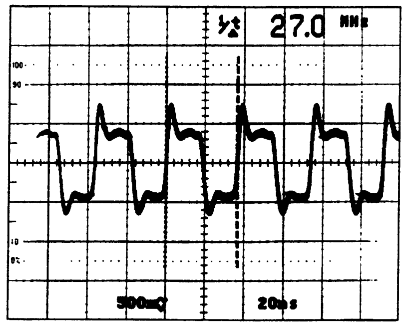

 13-116 (a)

SDI-26A (5/6): QSDI OUTPUT INTERFACE (DSR-60/60P)
SDI-26 (5/6): QSDI INPUT/OUTPUT INTERFACE (DSR-80/80P)

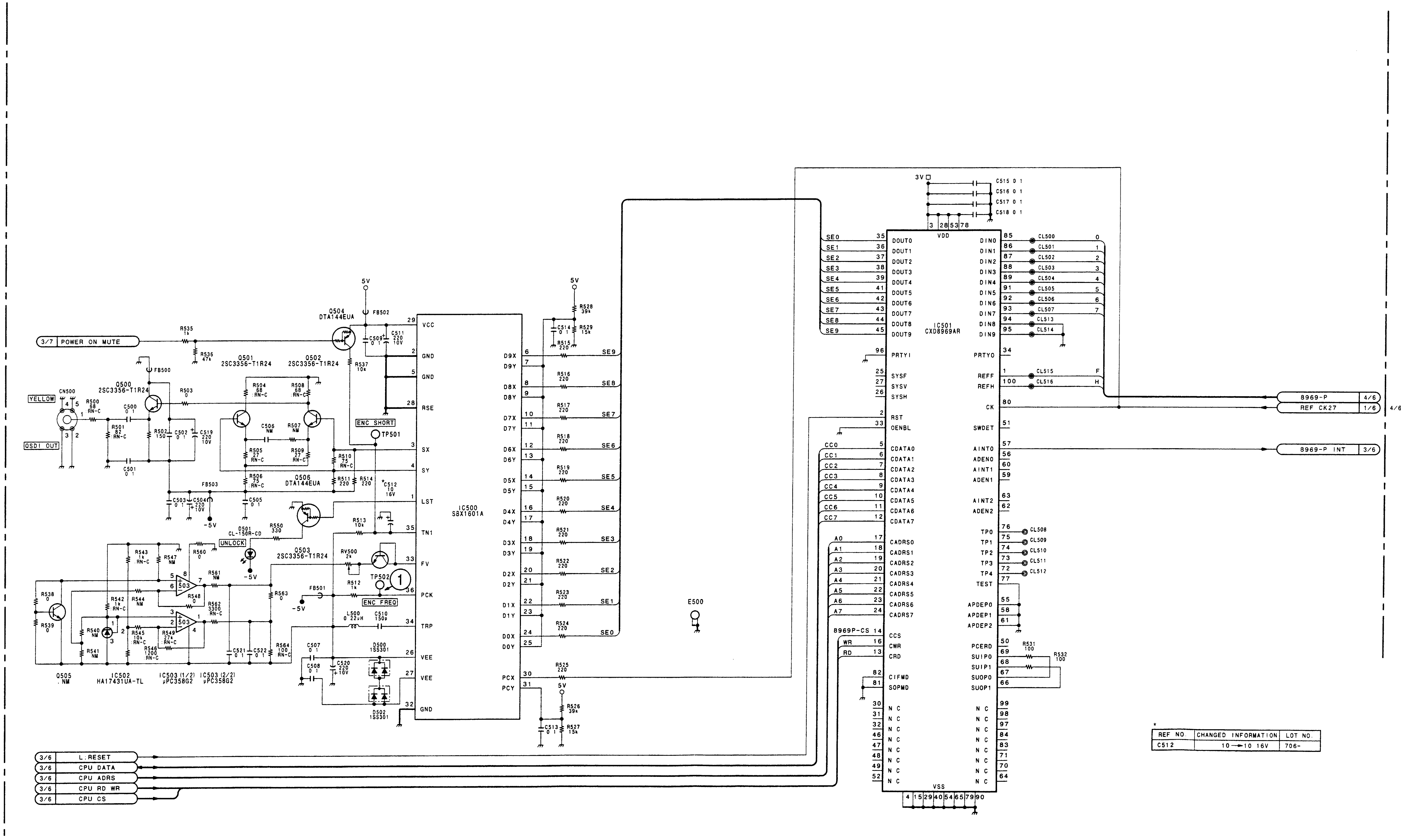

REF NO.	CHANGED INFORMATION	LOT NO.
C512	10 → 10 16V	706-

SDI-26/26A (5/6)
BOARD SUFFIX : -13
MODEL DSR-80/80P/60/60P
MODEL DSBK-110/110P

SDI-26 (6/6): QSDI INPUT/OUTPUT INTERFACE (DSR-80/80P)

DSR-80/80P

DSR-80/80P

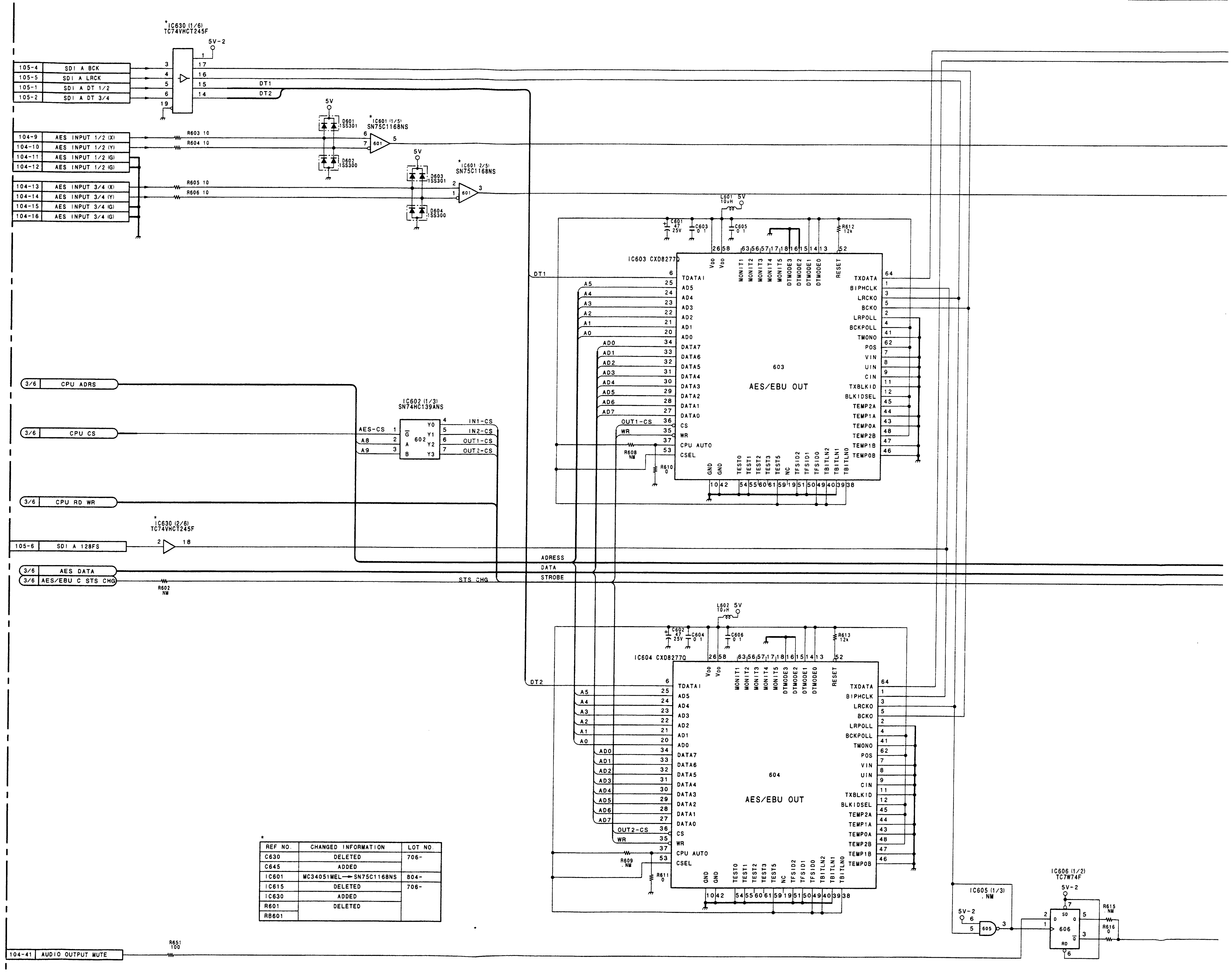

*

REF NO.	CHANGED INFORMATION	LOT NO.
C630	DELETED	706-
C645	ADDED	
IC601	MC34051MEL→SN75C1168NS	804-
IC615	DELETED	706-
IC630	ADDED	
R601	DELETED	
RB601		

1 2 3 4 5

A B C D E F G H

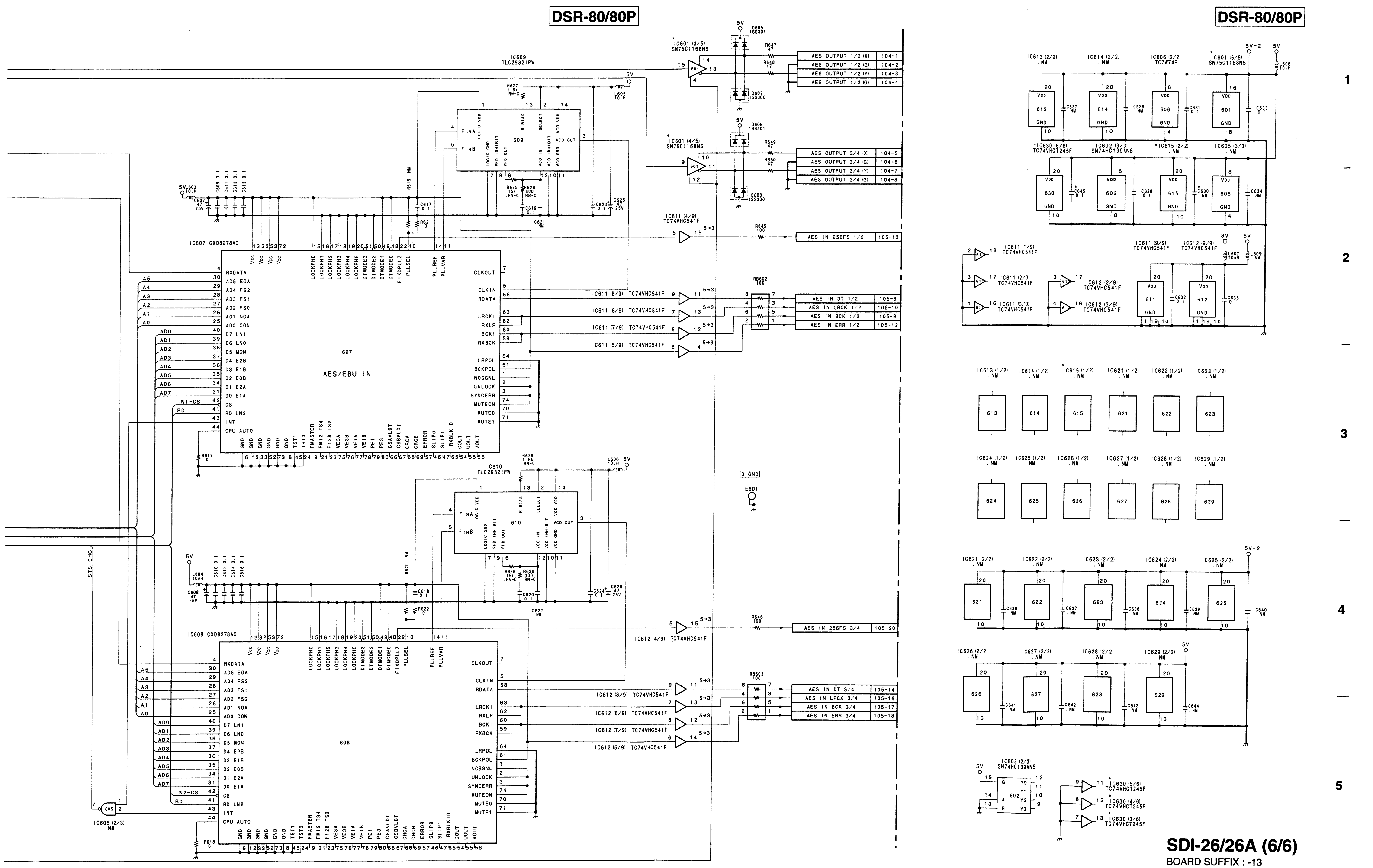

SDI-26/26A (6/6)

BOARD SUFFIX : -13
MODEL DSR-80/80P/60/60P
MODEL DSBK-110/110P

SDI-26A (1/6): QSDI OUTPUT INTERFACE (DSR-60/60P)
SDI-26 (1/6): QSDI INPUT/OUTPUT INTERFACE (DSR-80/80P)

1

2

3

4

5

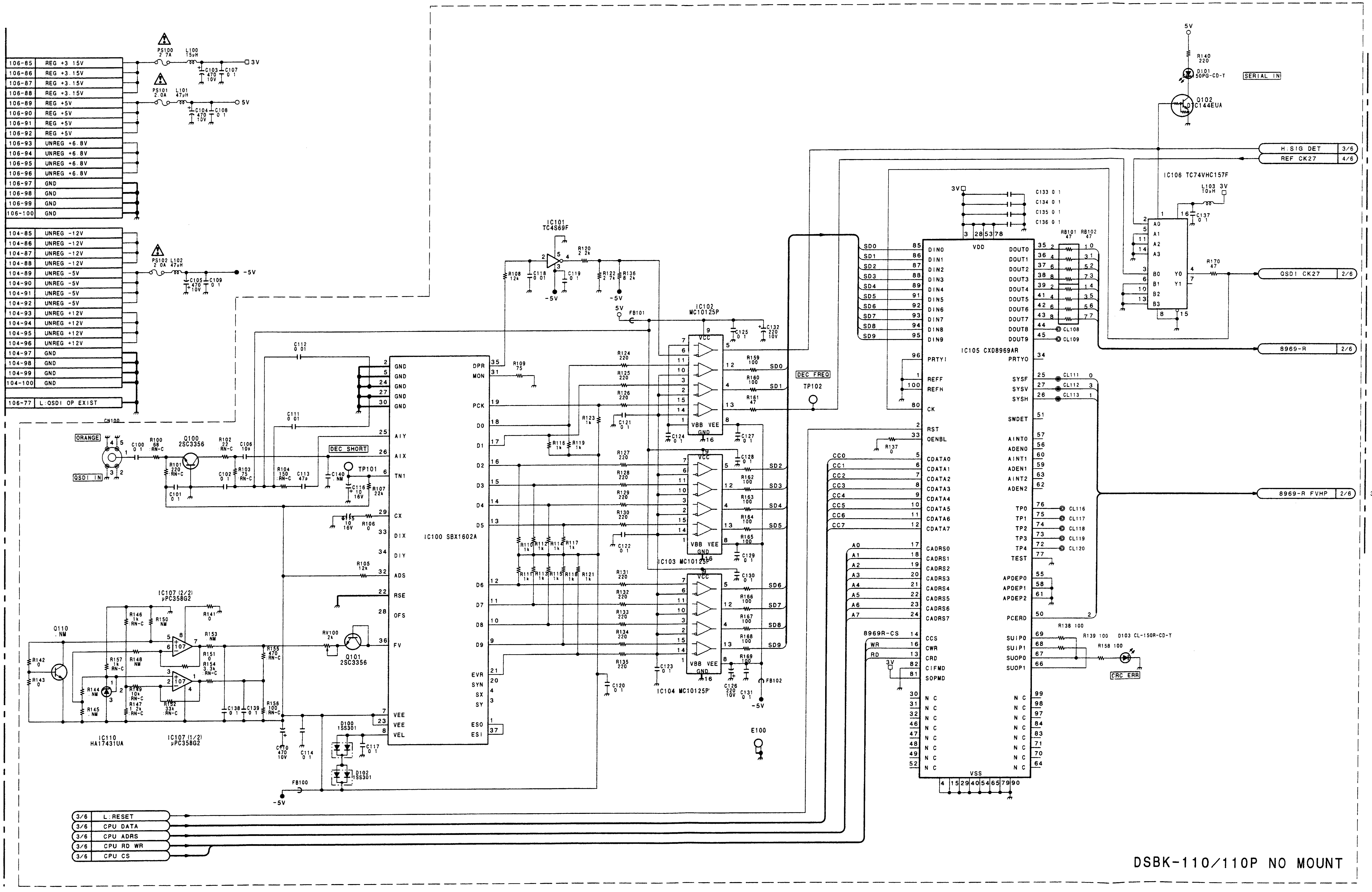

SDI-26/26A (1/6)
BOARD SUFFIX : -11, 12
MODEL DSR-80/80P/60/60P
MODEL DSBK-110/110P

SDI-26A (2/6): QSDI OUTPUT INTERFACE (DSR-60/60P)
SDI-26 (2/6): QSDI INPUT/OUTPUT INTERFACE (DSR-80/80P)

1

2

3

4

5

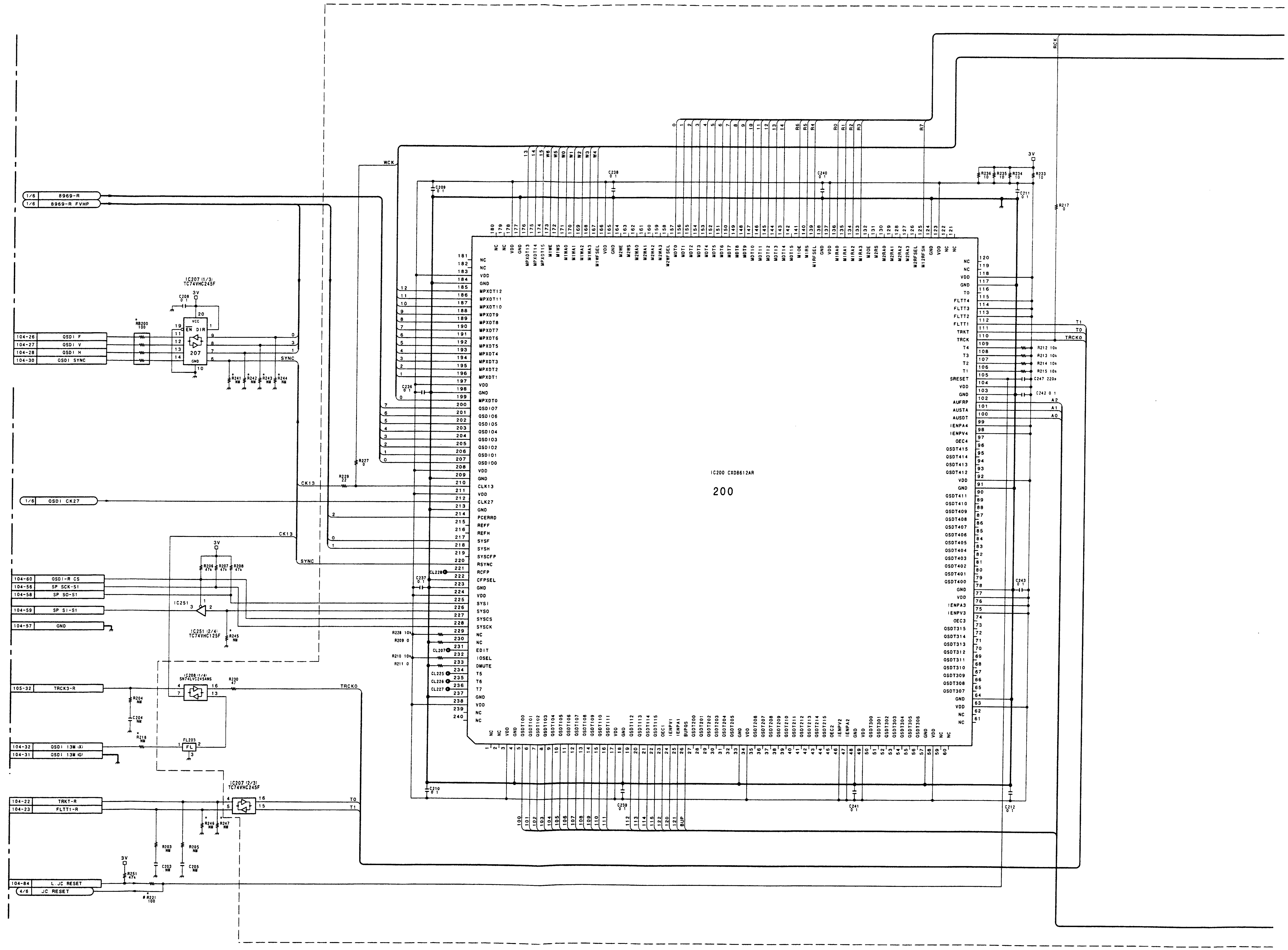

A B C D E F G H

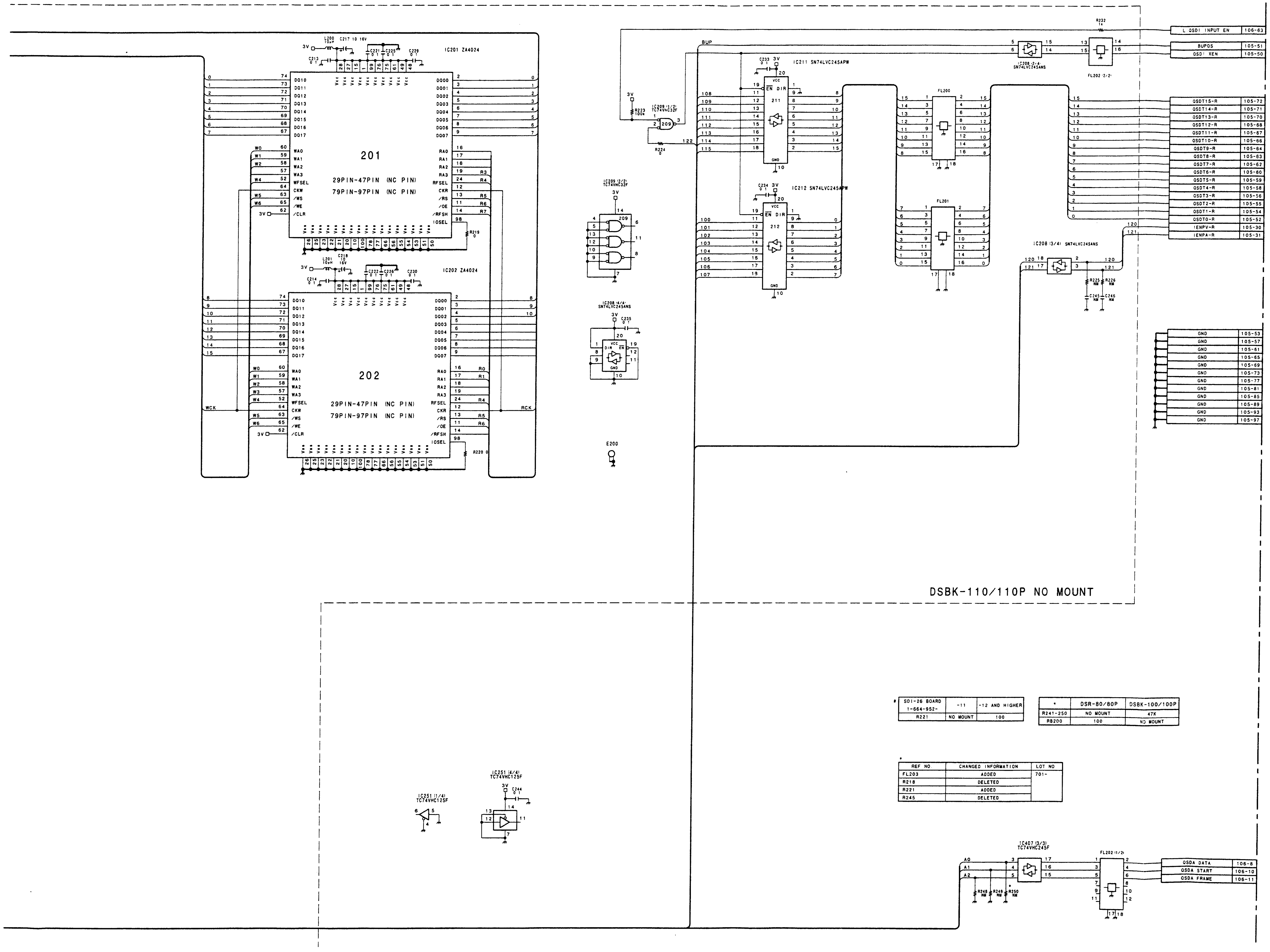

# SDI-26 BOARD 1-664-952-	-11	-12 AND HIGHER
R221	NO MOUNT	100

*	DSR-80/80P	DSBK-100/100P
R241-250	NO MOUNT	47K
RB200	100	NO MOUNT

*

REF NO.	CHANGED INFORMATION	LOT NO
FL203	ADDED	701-
R218	DELETED	
R221	ADDED	
R245	DELETED	

SDI-26/26A (2/6)

BOARD SUFFIX : -11, 12
MODEL DSR-80/80P/60/60P
MODEL DSBK-110/110P

SDI-26A (3/6): QSDI OUTPUT INTERFACE (DSR-60/60P)
SDI-26 (3/6): QSDI INPUT/OUTPUT INTERFACE (DSR-80/80P)

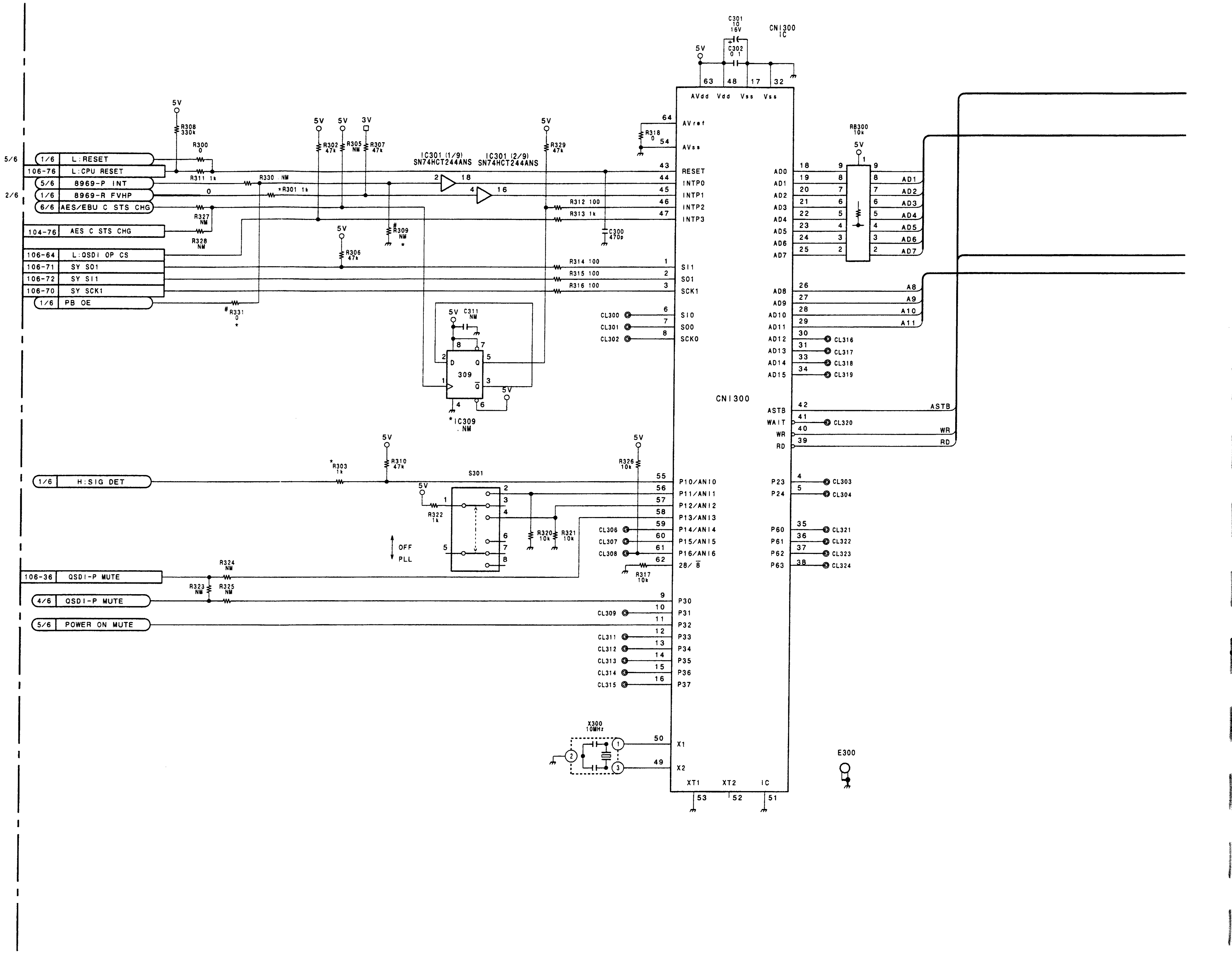

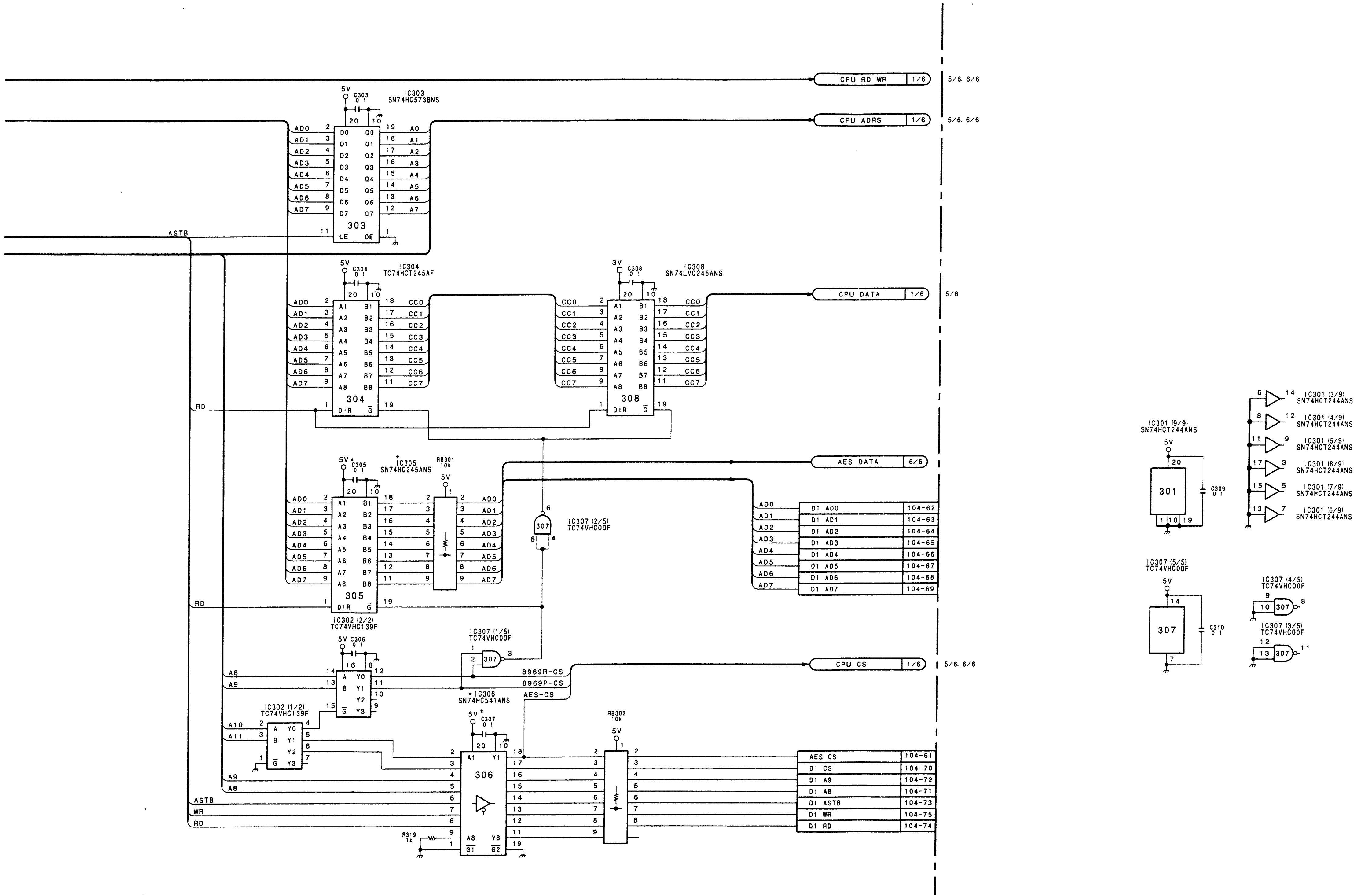

*

REF NO.	CHANGED INFORMATION	LOT NO.
IC300	ADDED	701-
IC309	DELETED	
R309	DELETED	
R331	ADDED	

# SDI-26 BOARD 1-664-952-	-11	-12 AND HIGHER
R309	10K	NO MOUNT
R331	NO MOUNT	0

*	DSR-80/80P	DSBK-100/100P
C305. 307	0.1	NO MOUNT
IC305	SN74HC245NS	NO MOUNT
IC306	SN74HC541ANS	NO MOUNT
R301. 303 R319	1K	NO MOUNT

SDI-26/26A (3/6)

BOARD SUFFIX : -11, 12
MODEL DSR-80/80P/60/60P
MODEL DSBK-110/110P

SDI-26A (4/6): QSDI OUTPUT INTERFACE (DSR-60/60P)
SDI-26 (4/6): QSDI INPUT/OUTPUT INTERFACE (DSR-80/80P)

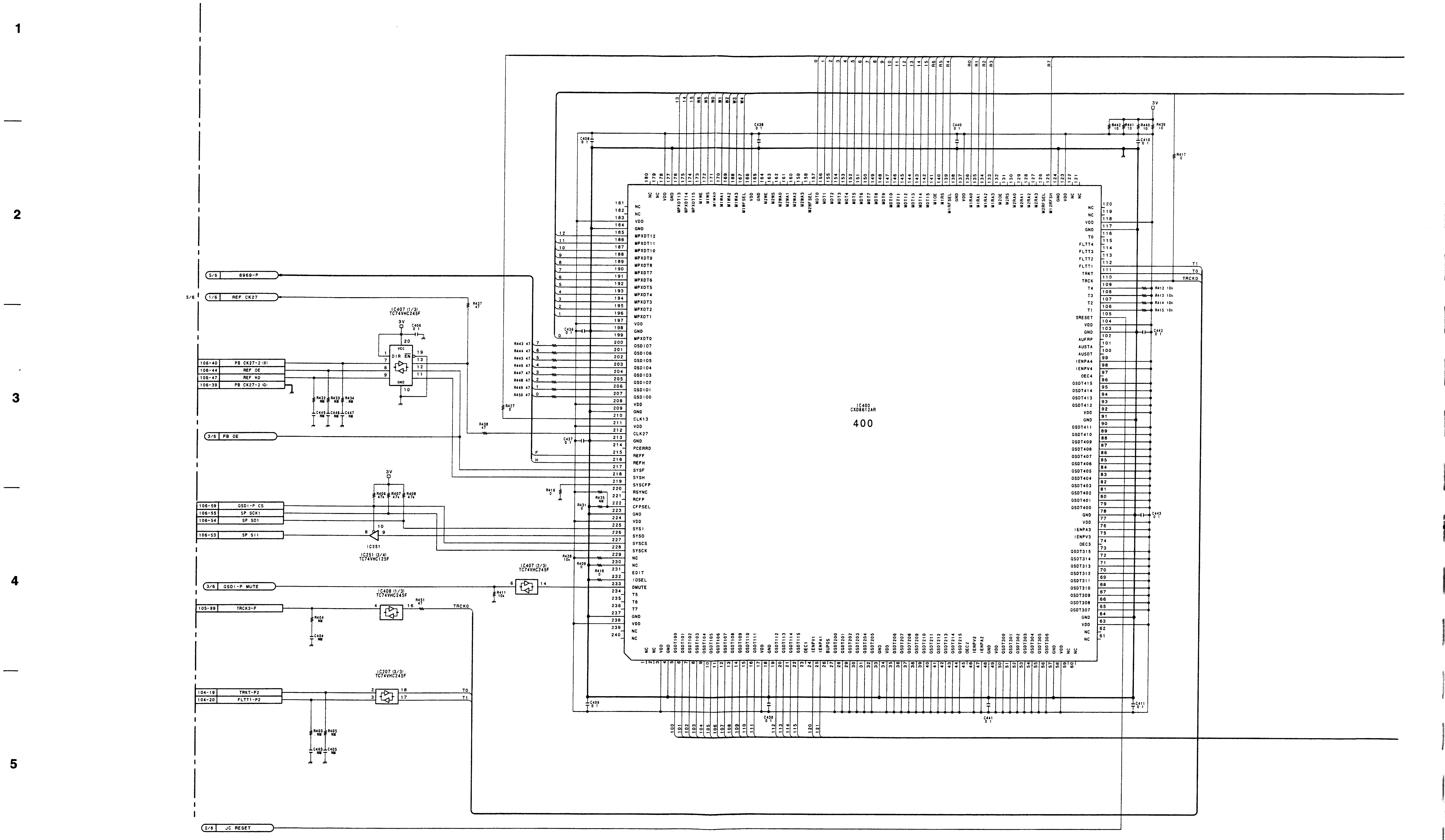

DSR-80/80P/60/60P

A | B | C | D | E | F | G | H

SONY-SP0754 / DRUCK 404

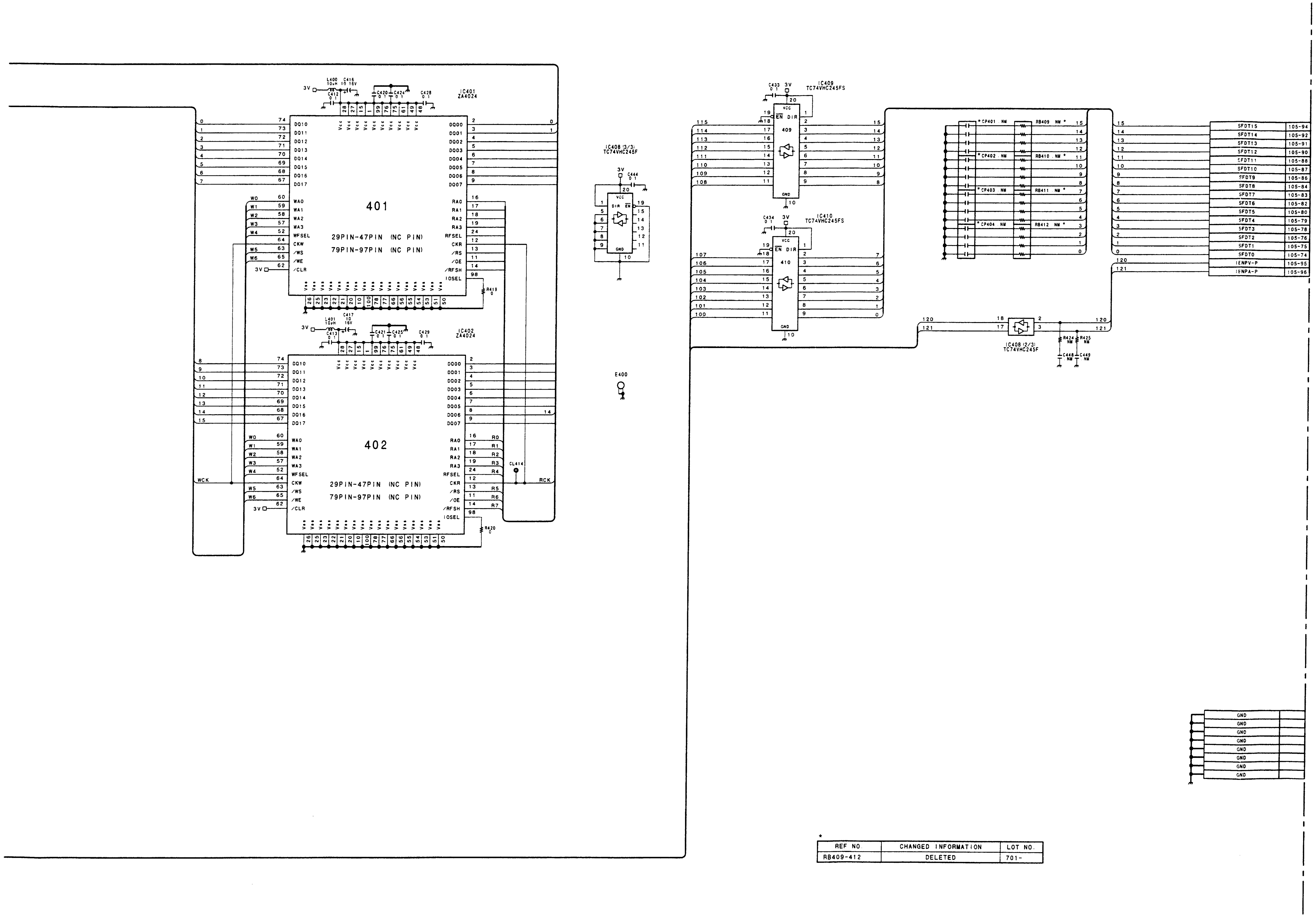

REF NO	CHANGED INFORMATION	LOT NO.
RB409-412	DELETED	701-

SDI-26/26A (4/6)
BOARD SUFFIX : -11, 12
MODEL DSR-80/80P/60/60P
MODEL DSBK-110/110P

 SDI-26/26A

SDI-26A: QSDI OUTPUT INTERFACE (DSR-60/60P)
SDI-26: QSDI INPUT/OUTPUT INTERFACE (DSR-80/80P)

① TP502 MODE: 75% Color Bar/PB (NTSC)
MODE: 100% Color Bar/PB (PAL)

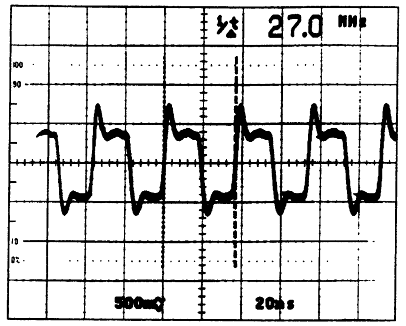

SDI-26A (5/6): QSDI OUTPUT INTERFACE (DSR-60/60P)
SDI-26 (5/6): QSDI INPUT/OUTPUT INTERFACE (DSR-80/80P)

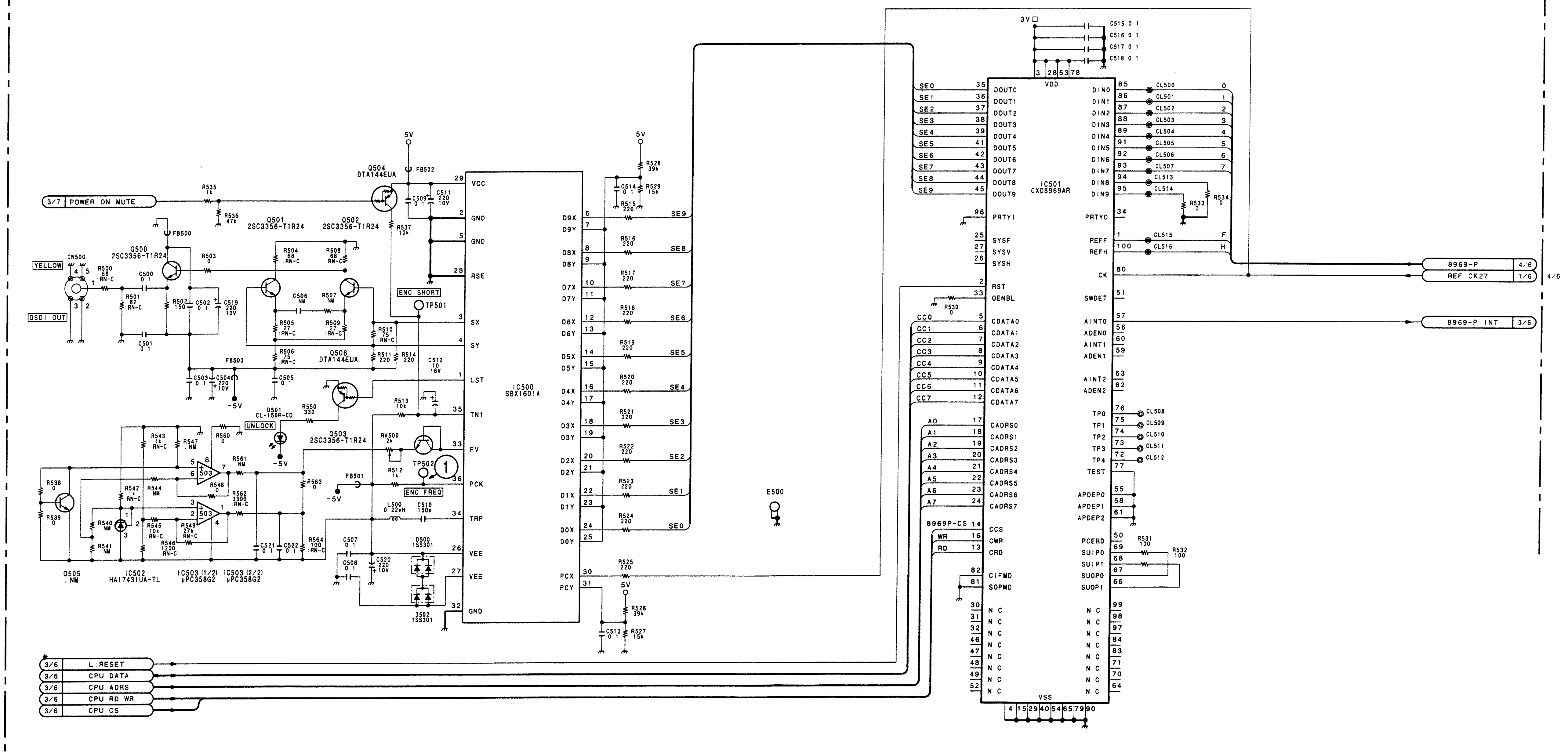

SDI-26/26A (5/6)
BOARD SUFFIX : -11, 12
MODEL DSR-80/80P/60/60P
MODEL DSBK-110/110P

SDI-26 (6/6)

SDI-26 (6/6): QSDI INPUT/OUTPUT INTERFACE (DSR-80/80P)

DSR-80/80P

DSR-80/80P

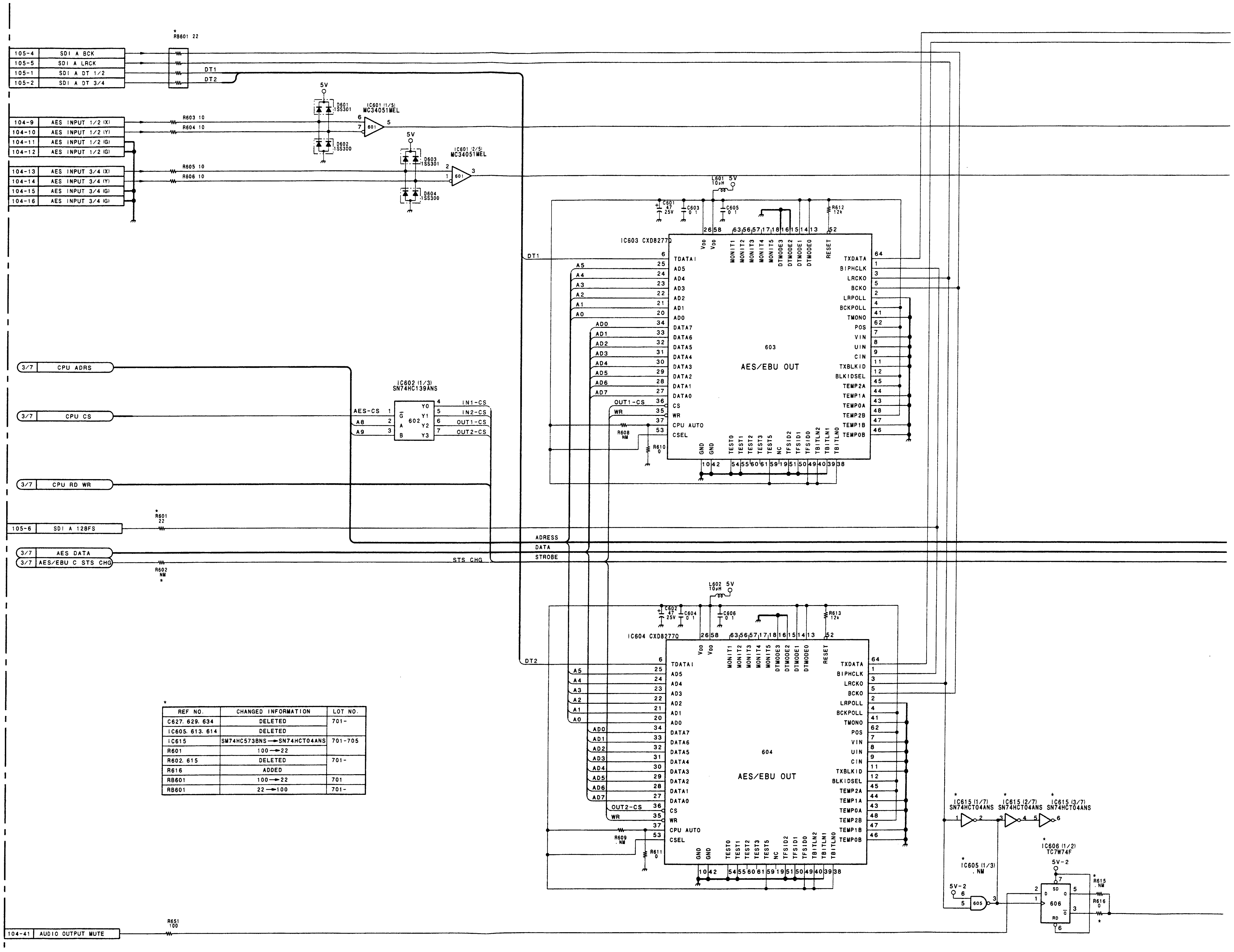

*

REF NO.	CHANGED INFORMATION	LOT NO.
C627. 629. 634	DELETED	701-
IC605. 613. 614	DELETED	
IC615	SM74HC573BNS → SN74HCT04ANS	701-705
R601	100 → 22	
R602. 615	DELETED	701-
R616	ADDED	
RB601	100 → 22	701
RB601	22 → 100	701-

13-118

SONY-SP0754 / DRUCK 408

DSR-80/80P

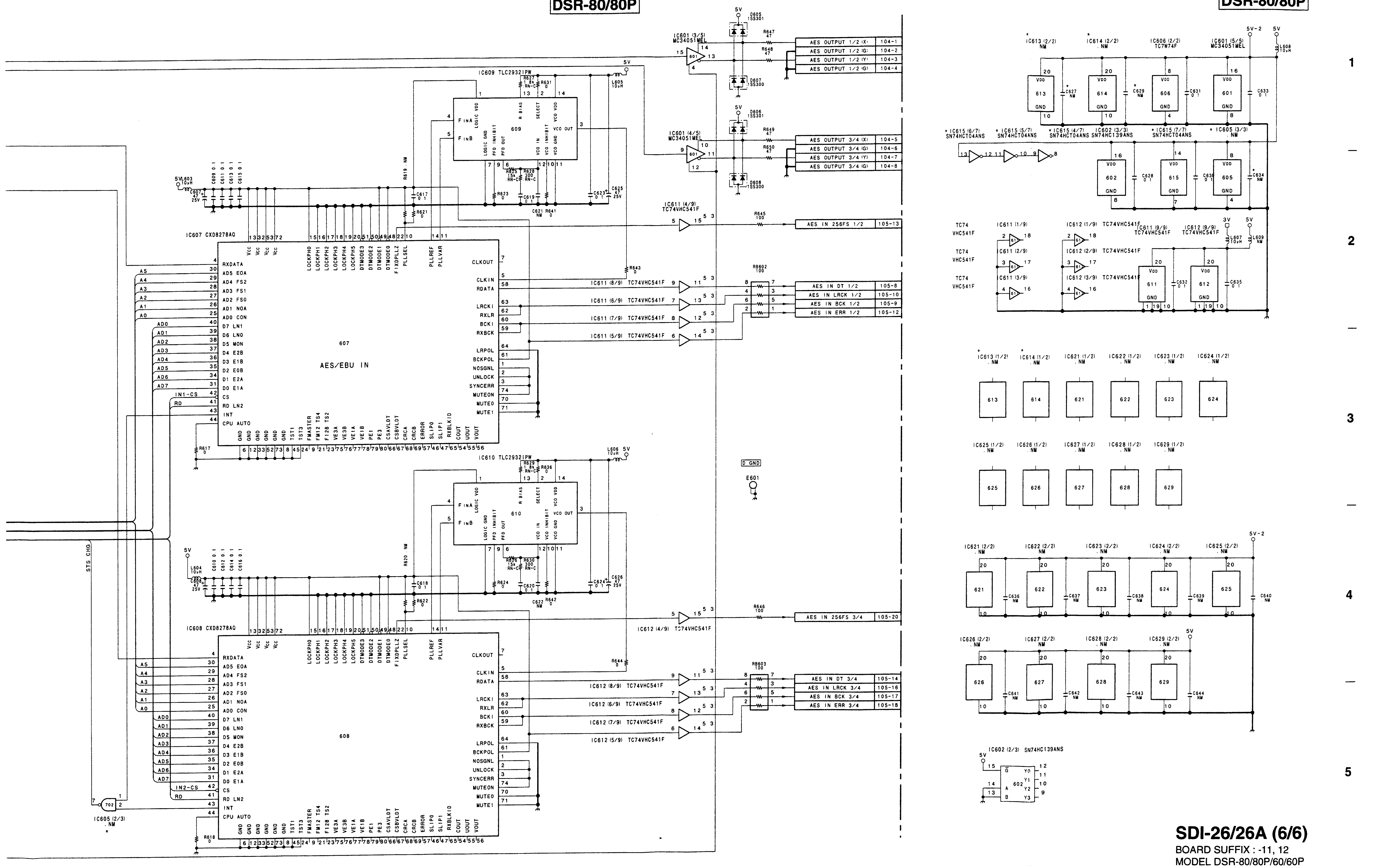

SDI-26/26A (6/6)

BOARD SUFFIX : -11, 12
MODEL DSR-80/80P/60/60P
MODEL DSBK-110/110P

SDI-27 (1/2): SDI INPUT INTERFACE

DSR-80/80P

DSR-80/80P

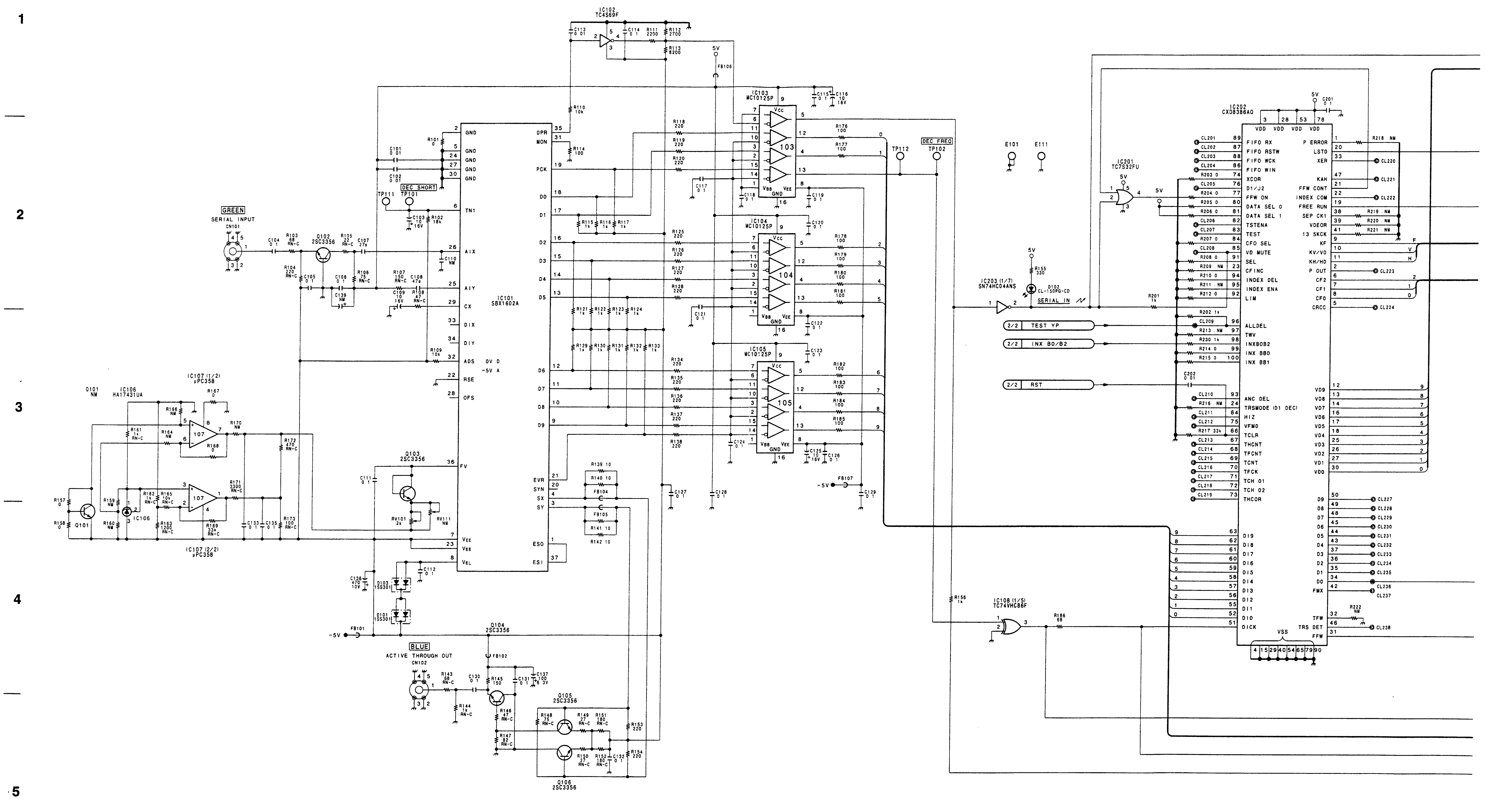

DSR-80/80P

A B C D E F G H

SONY-SP0754 / DRUCK 410

DSR-80/80P

DSR-80/80P

1

—

2

—

3

—

4

—

5

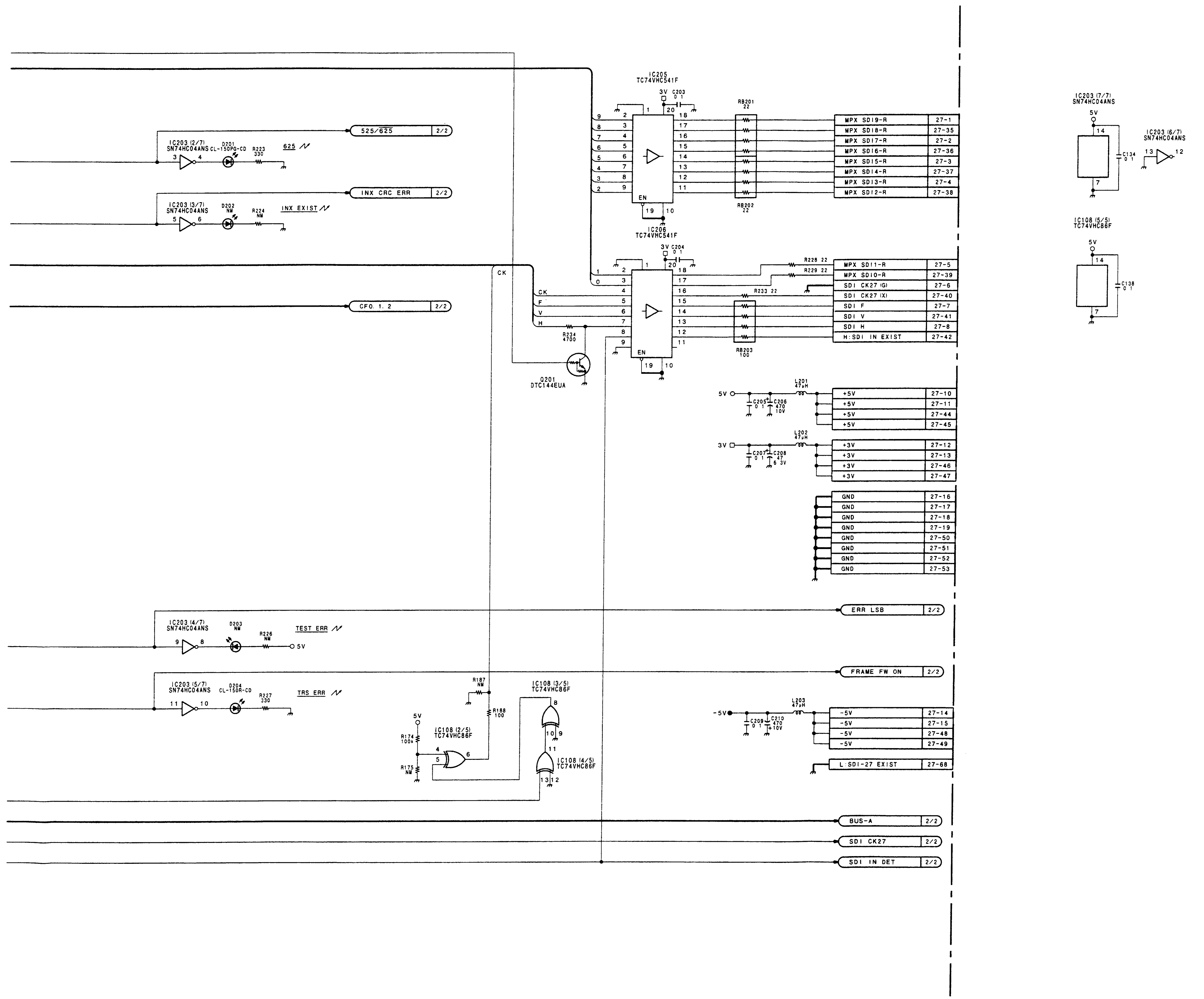

SDI-27 (1/2)
MODEL DSBK-120/120P

I | J | K | L | M | N | O | P

SDI-27 (2/2): SDI INPUT INTERFACE

DSR-80/80P

1

2

3

4

5

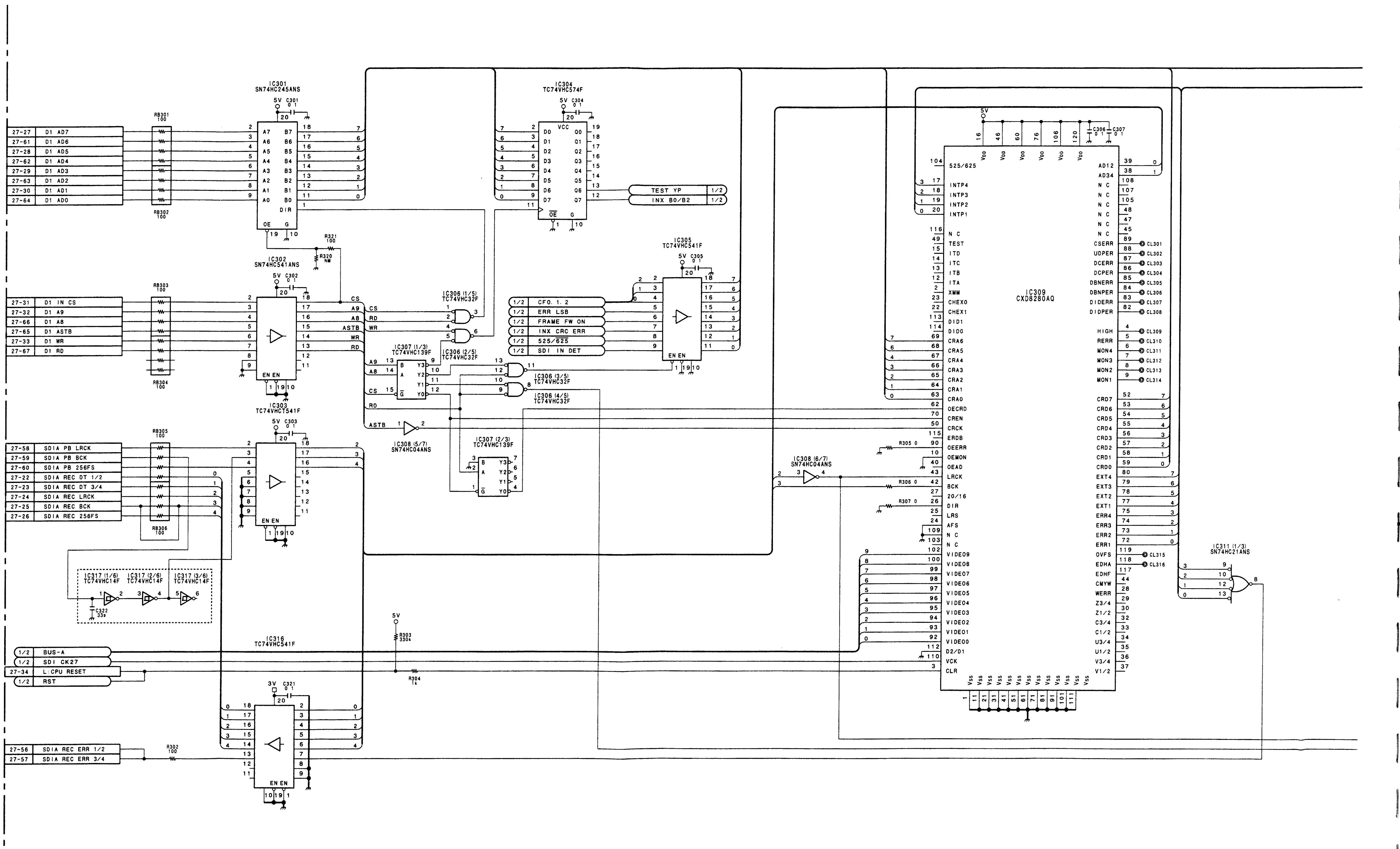

A | B | C | D | E | F | G | H

SONY-SP0754 / DRUCK 412

1

2

3

4

5

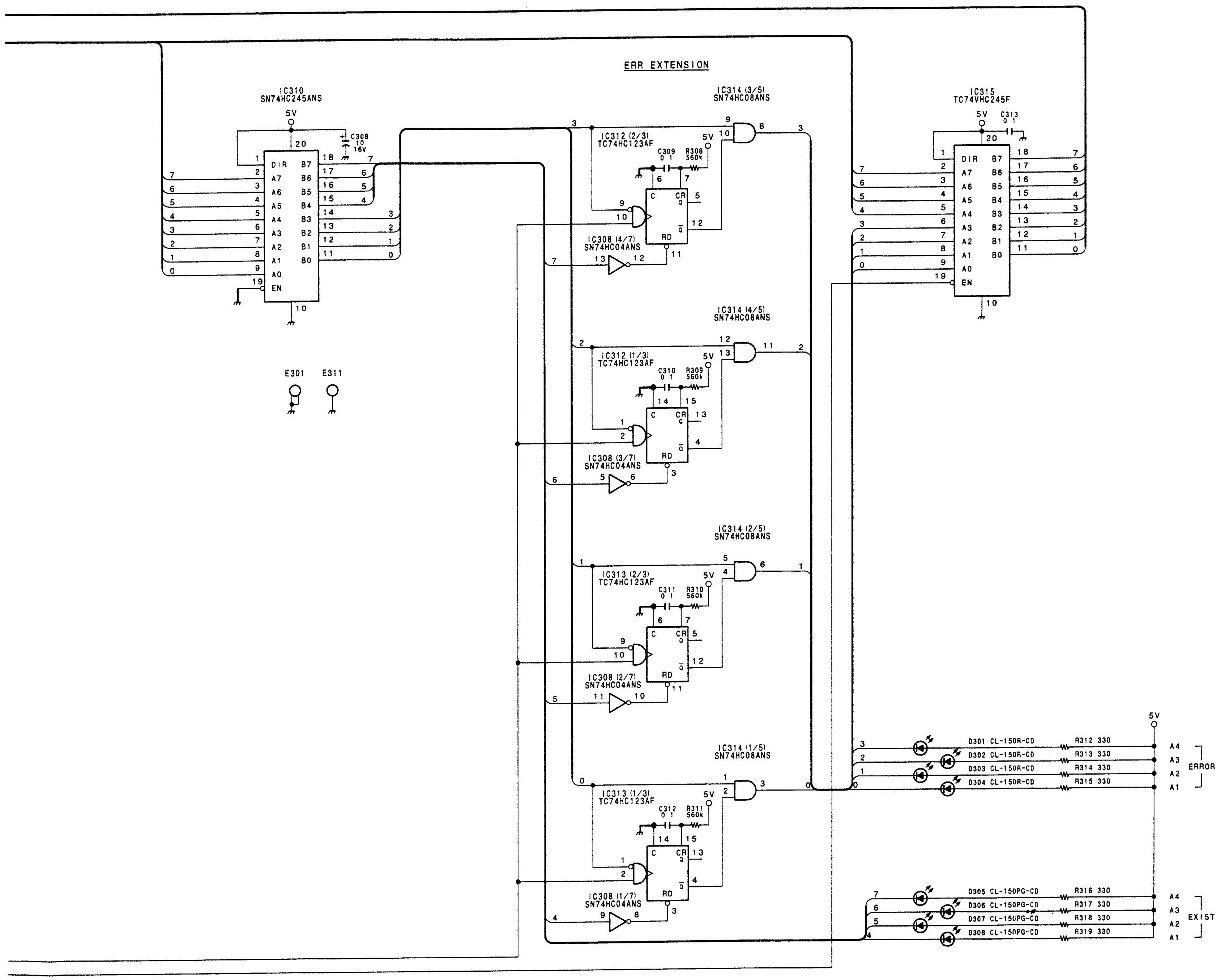

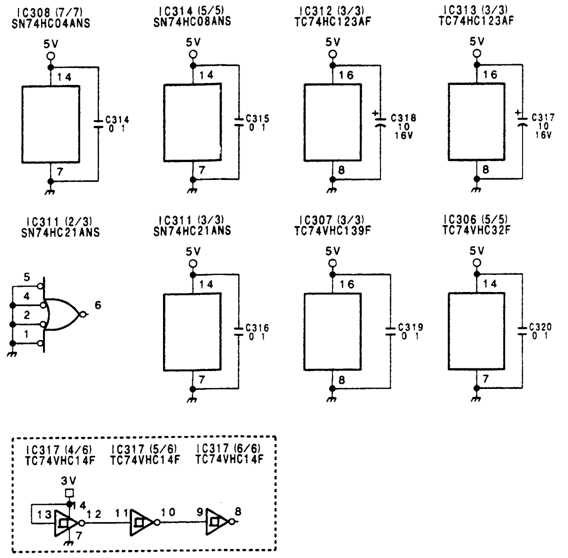

SDI-27 (2/2)

MODEL DSBK-120/120P

SDI-28 (1/2): SDI OUTPUT INTERFACE

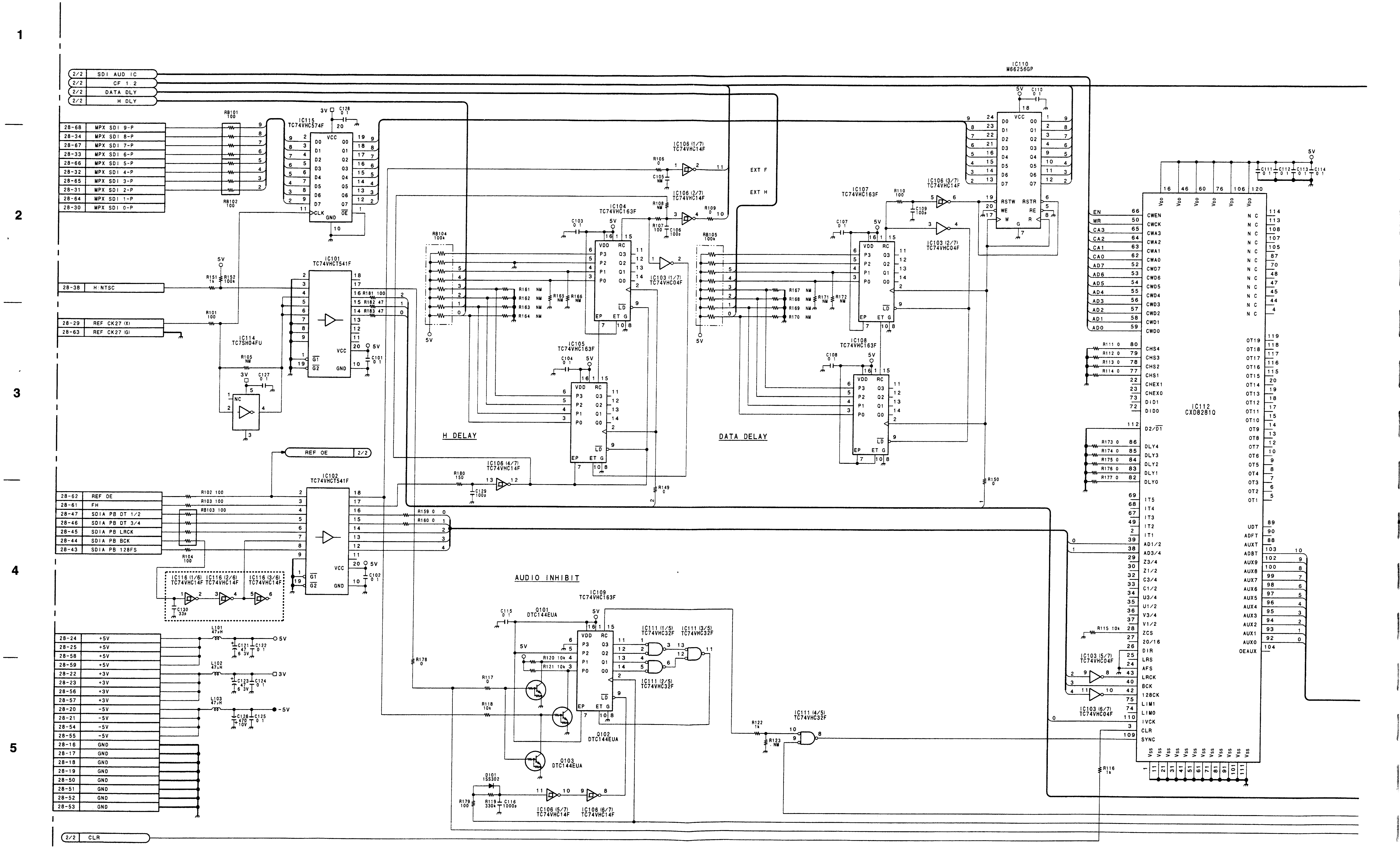

DSR-80/80P/60/60P

A B C D E F G H

SONY-SP0754 / DRUCK 414

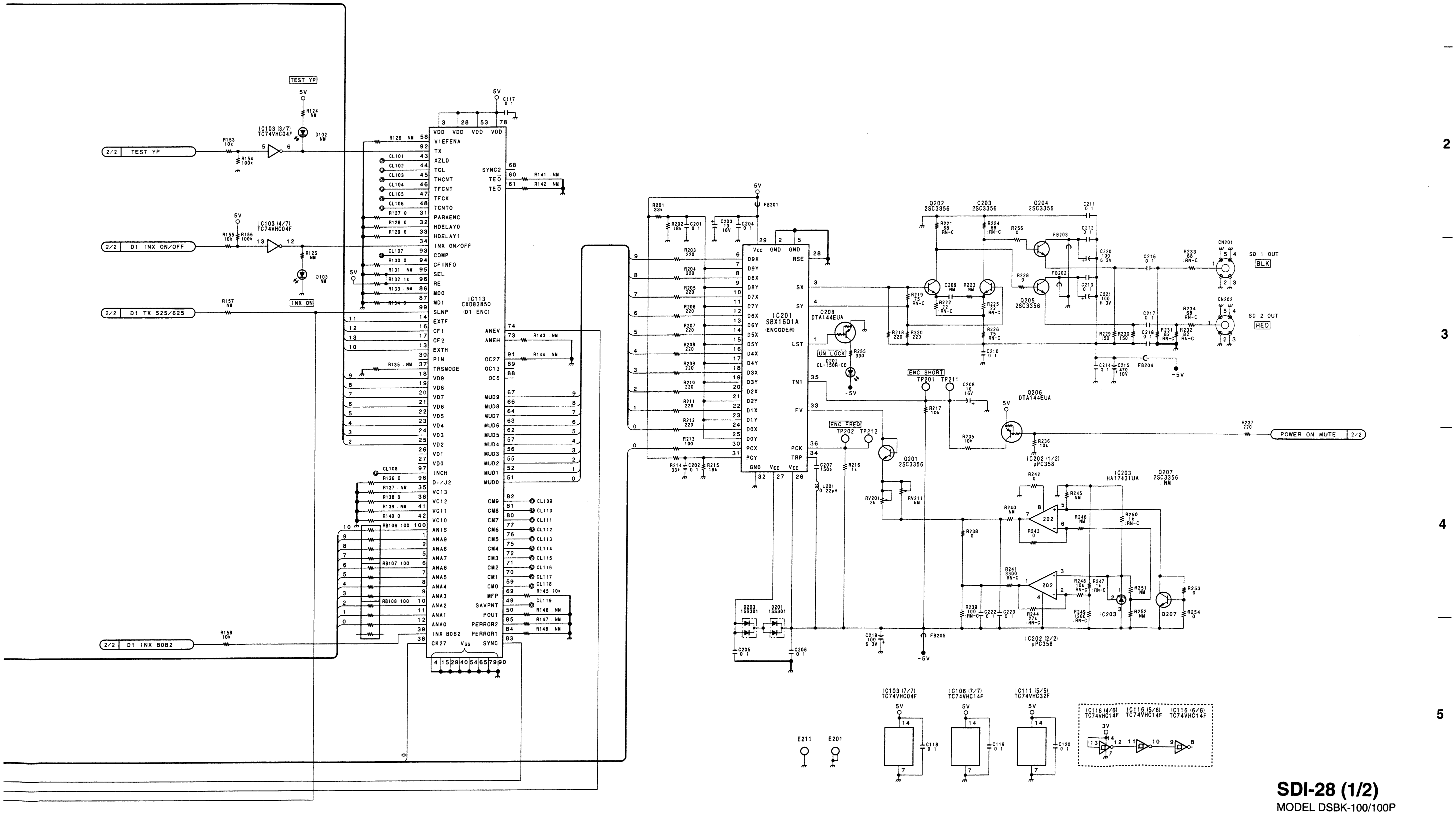

SDI-28 (1/2)

MODEL DSBK-100/100P
MODEL DSBK-120/120P

SDI-28 (2/2): SDI OUTPUT INTERFACE

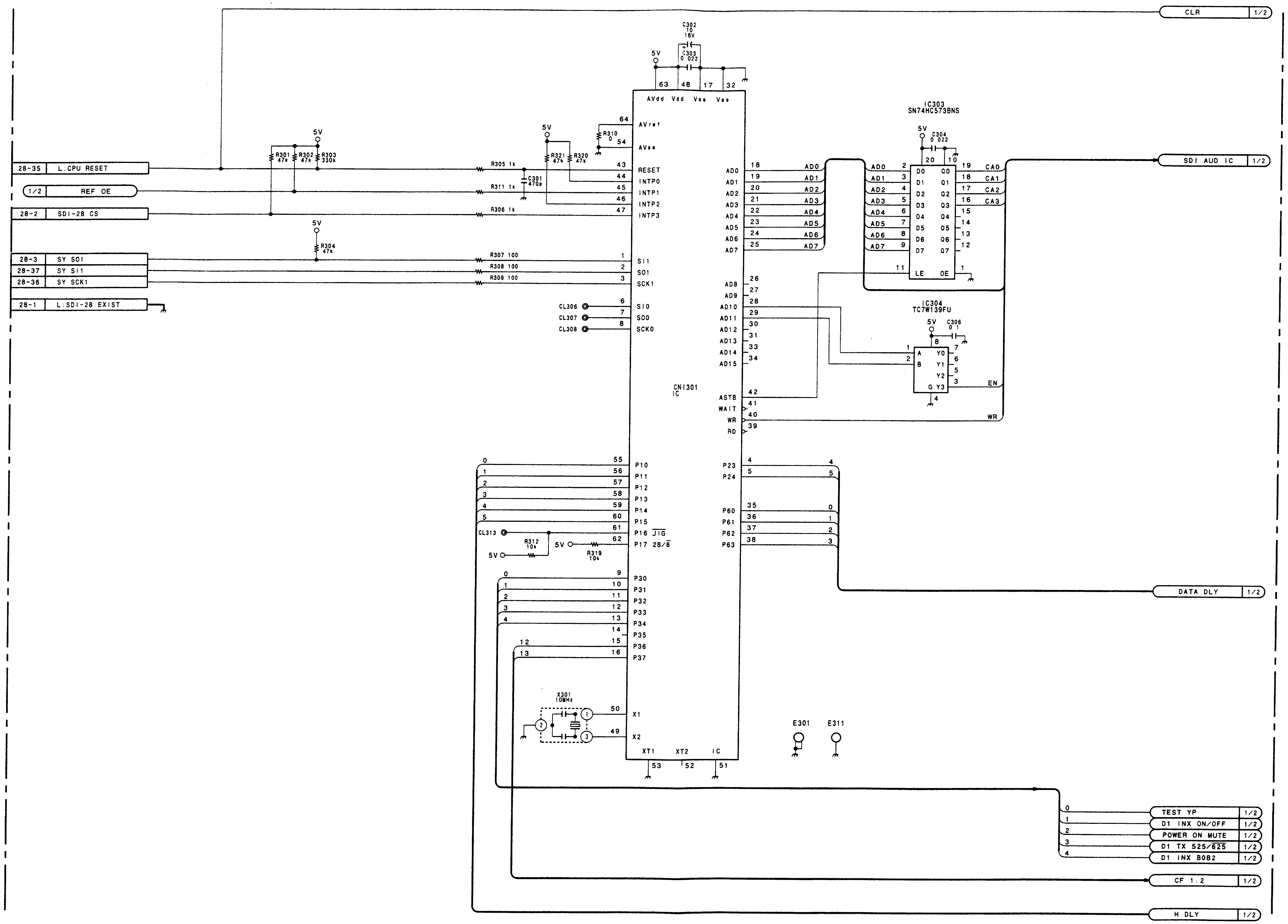

SDI-28 (2/2)
MODEL DSBK-100/100P
MODEL DSBK-120/120P

DSR-80/80P/60/60P

SONY-SP0754 / DRUCK 416

SV-184: SERVO SYSTEM

SV-184 (2/4)

① TP106 MODE: 75% Color Bar/PB (NTSC)

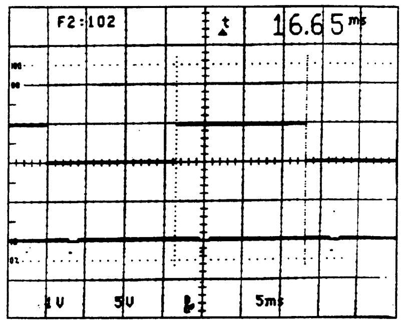

① TP106 MODE: 100% Color Bar/PB (PAL)

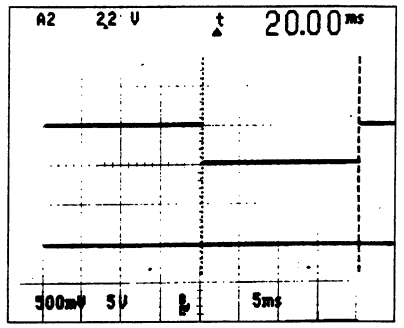

② TP107 MODE: 75% Color Bar/PB (NTSC)

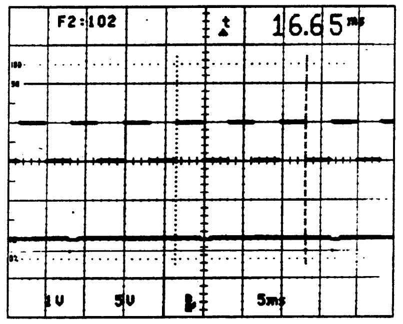

(VS. Ref. in)

② TP107 MODE: 100% Color Bar/PB (PAL)

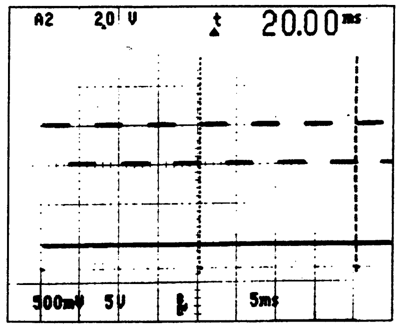

(VS. Ref. in)

② TP207 MODE: 75% Color Bar/PB (NTSC)
② TP107 MODE: 75% Color Bar/PB (NTSC)

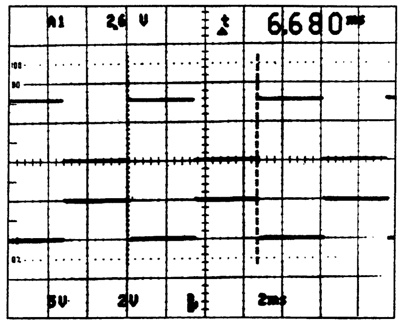

② TP207 MODE: 100% Color Bar/PB (PAL)
② TP107 MODE: 100% Color Bar/PB (PAL)

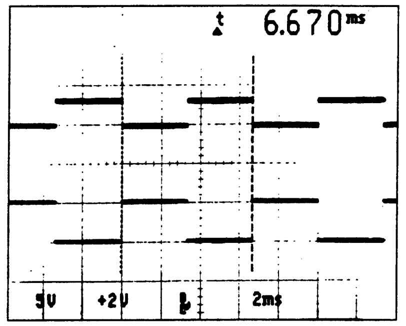

SV-184 (3/4)

① TP205 MODE: 75% Color Bar/PB (NTSC)

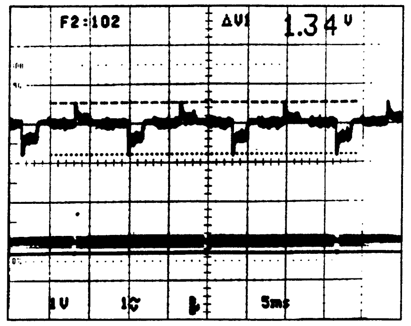

(15μ PB mode)

① TP205 MODE: 100% Color Bar/PB (PAL)

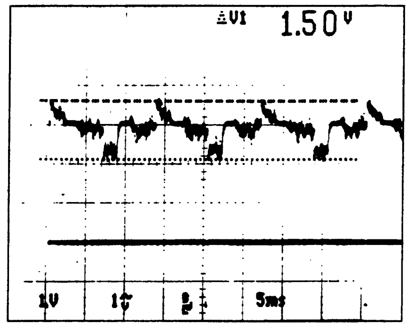

(15μ PB mode)

SV-184 (4/4)

① TP303 MODE: 75% Color Bar/PB (NTSC)
TP305 MODE: 75% Color Bar/PB (NTSC)

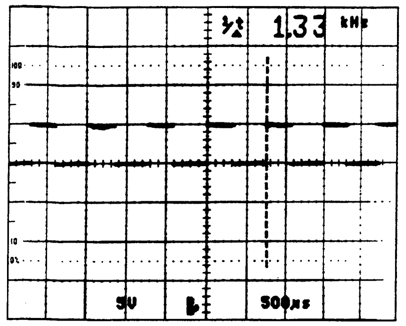

(15μ PB mode)

① TP305 MODE: 100% Color Bar/PB (PAL)
TP303 MODE: 100% Color Bar/PB (PAL)

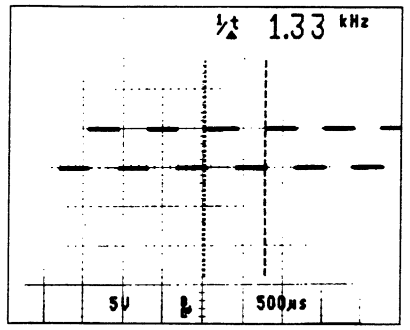

(15μ PB mode)

SV-184
MODEL DSR-80/80P/60/60P

SV-184 (1/4): SERVO SYSTEM

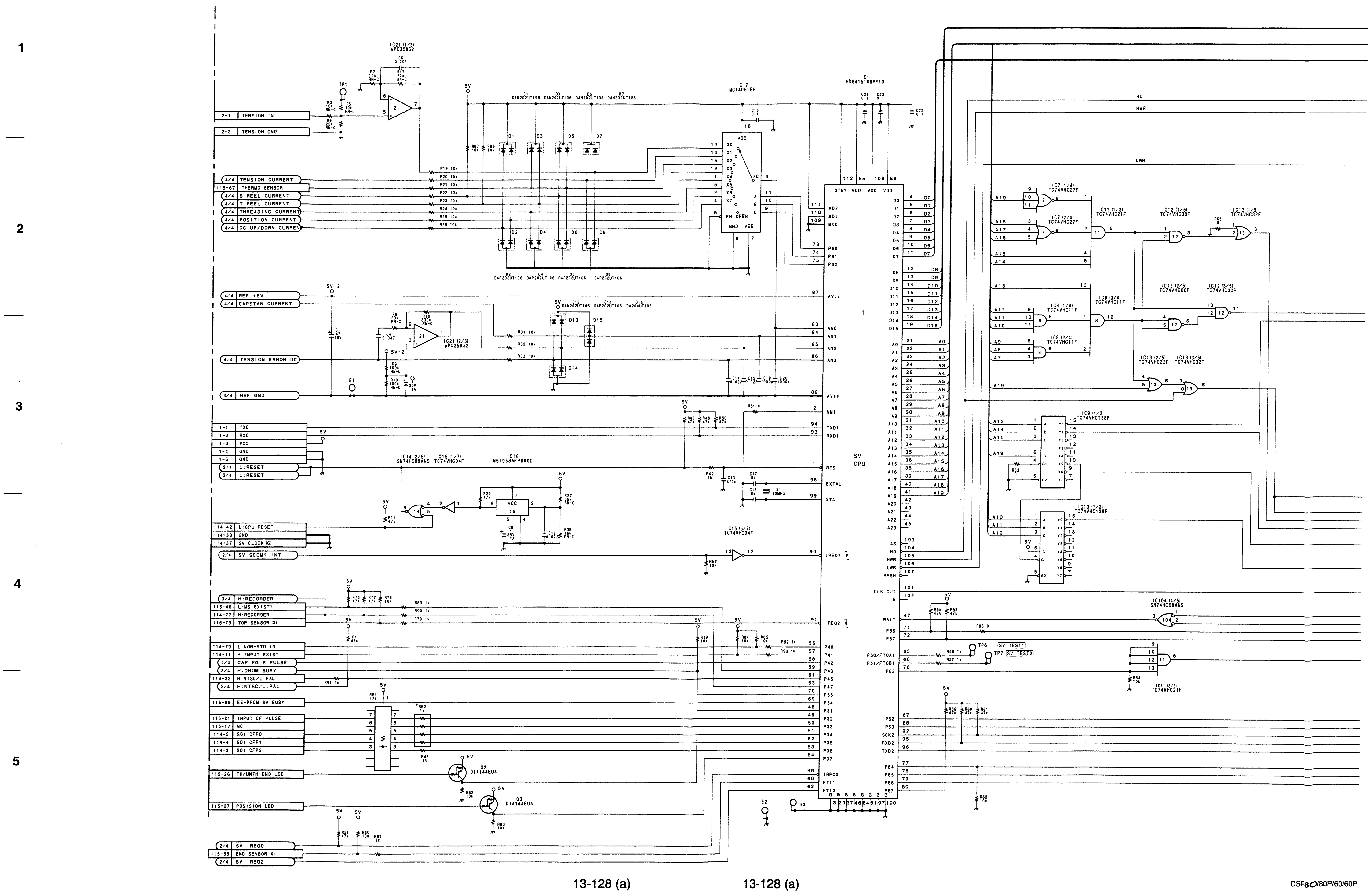

A | B | C | D | E | F | G | H

DSR-80/80P/60/60P

SONY-SP0754 / DRUCK 418

 SV-184 (1/4)

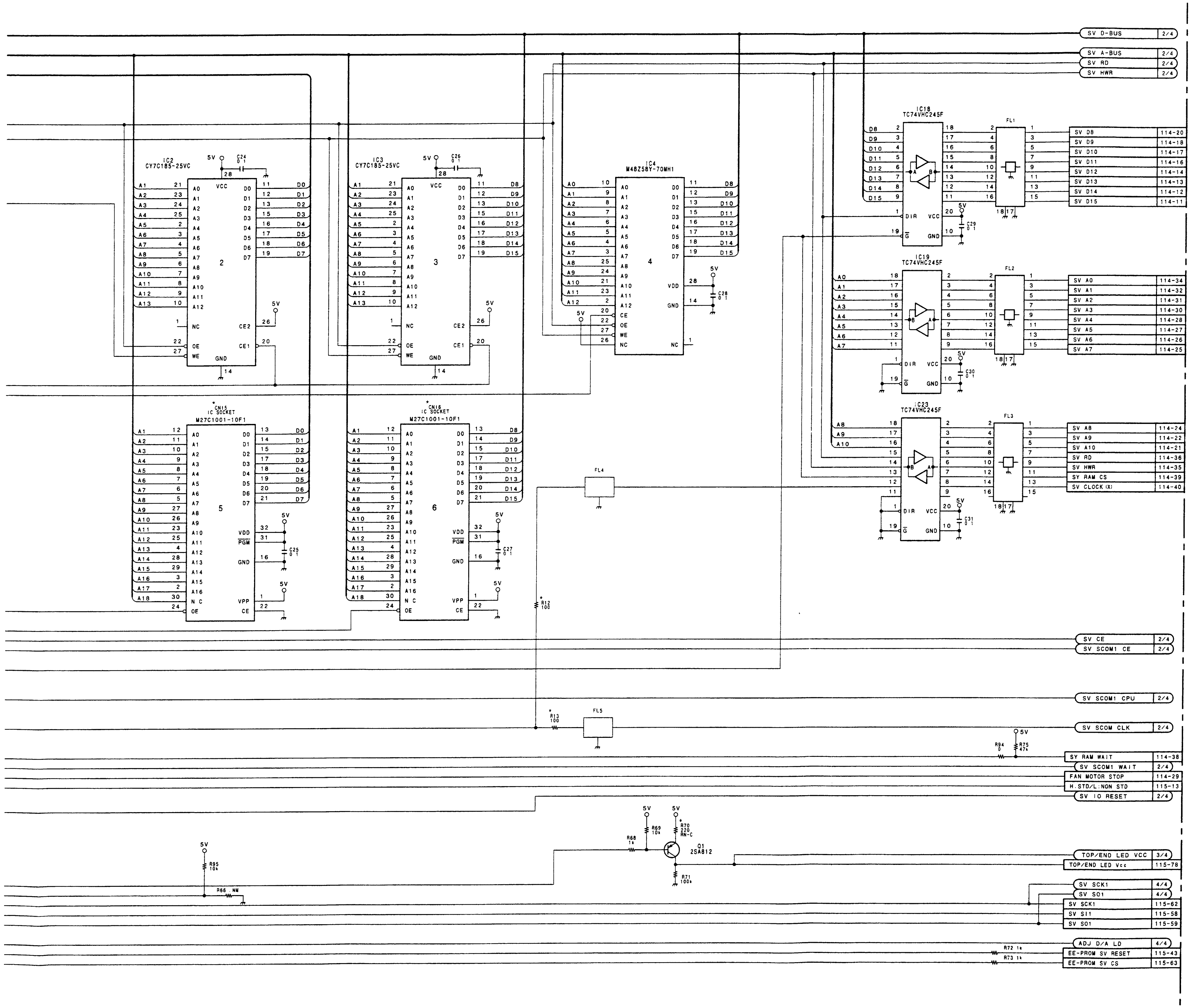

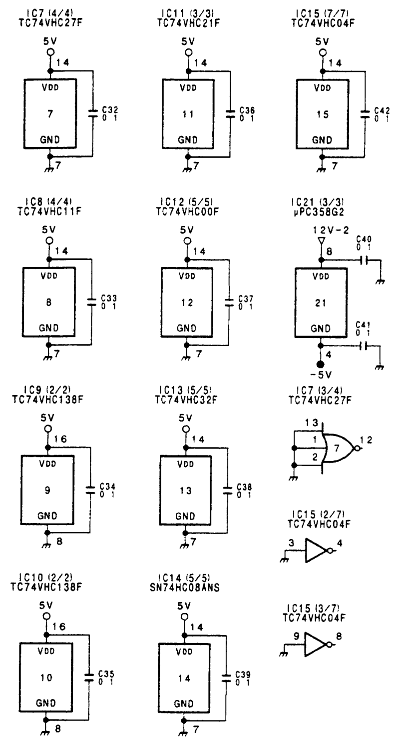

* SV-184A BOARD

REF NO.	CHANGED INFORMATION	LOT NO.
IC5, 6	M27C1001-10F1 → MC27C1001	711
IC5, 6	M27C1001 → M27C1001-10F1	712-
R12, 13	0 → 100	701-
R42-45	DELETED	706-
R70	220 → 91	701-707
R70	91 → 220	708-
RB2	ADDED	706-

FIN. REF	
R	95
C	42
RB	1
D	11
Q	3
IC	23
X	
PS	
CL	3
S	
TP	8
E	3

SV-184 (1/4)

BOARD SUFFIX : -14
MODEL DSR-80/80P/60/60P

SV-184 (2/4): SERVO SYSTEM

1

2

3

4

5

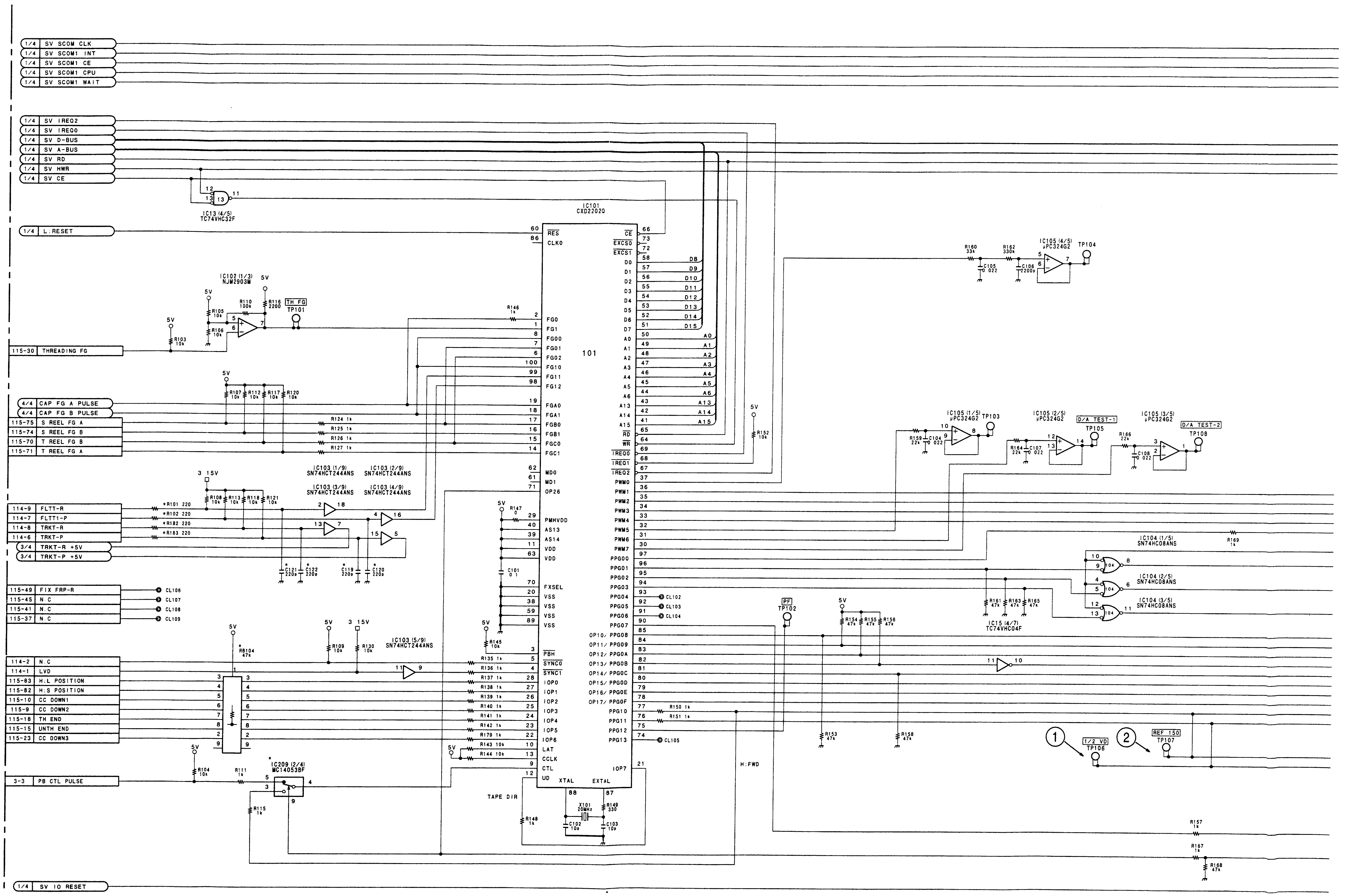

13-130 (a) 13-130 (a)

A | B | C | D | E | F | G | H

 SV-184 (2/4)

1

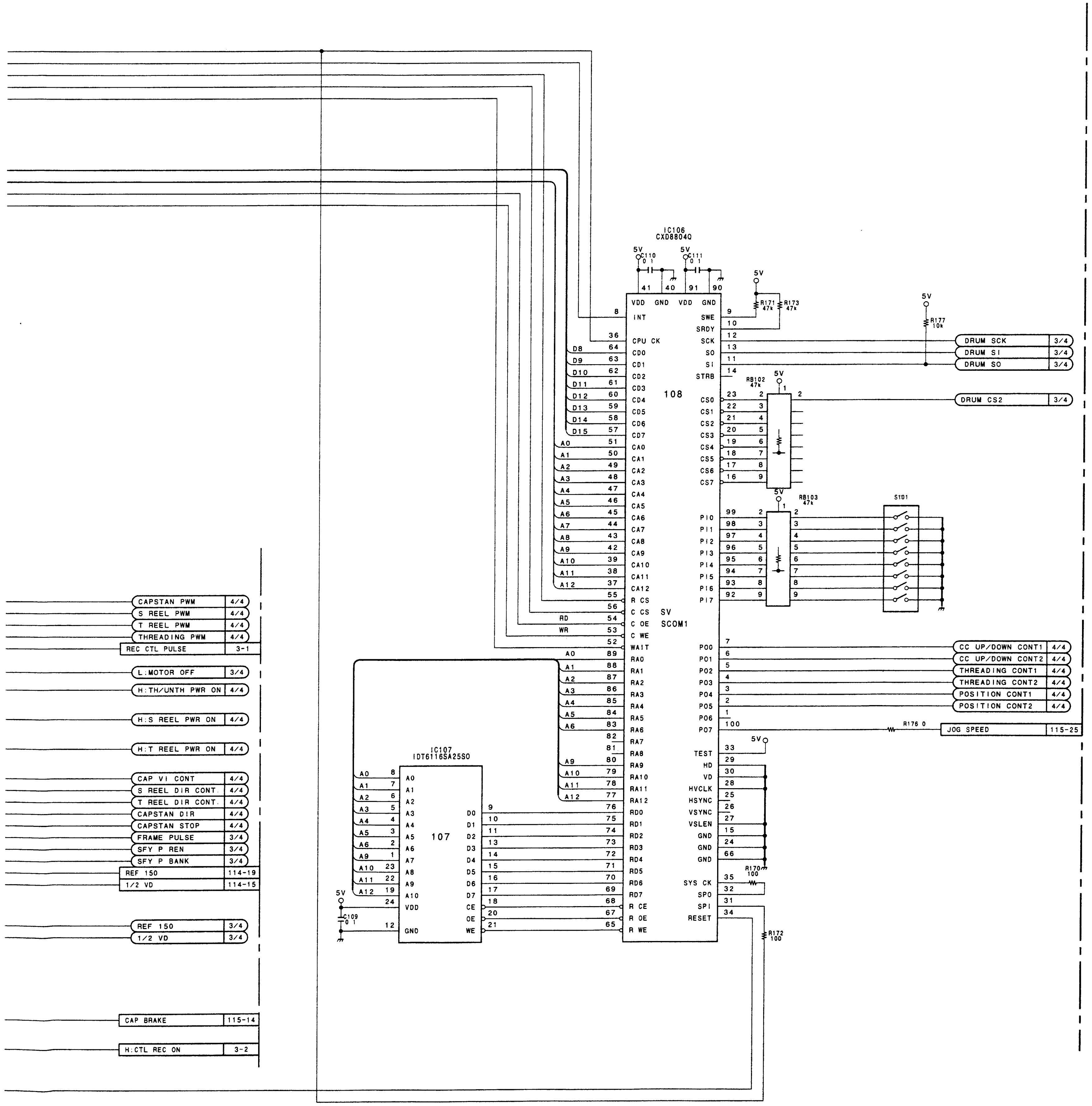

2

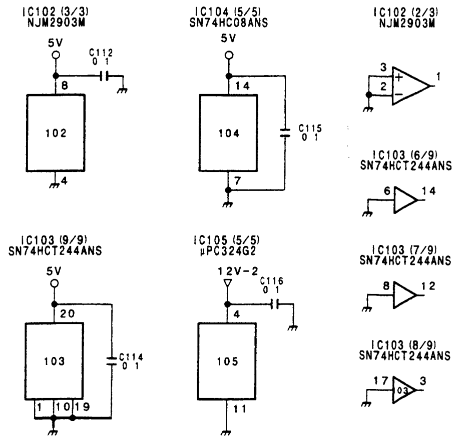

3

* SV-184A BOARD

REF NO.	CHANGED INFORMATION	LOT NO.
C119. 120	470p → 220p	706-
C121. 122	ADDED	
IC209	MC14053BF-T2 → MC14053BFEL	
R101. 102. 182. 183	0 → 220	
R114. 119. 122. 123 R128. 129. 178. 180 R181	DELETED	
RB104	ADDED	

4

FIN. REF	
R	183
C	120
RB	103
D	101
Q	101
IC	108
X	101
CL	109
CV	
S	101
TP	108
E	

5

SV-184 (2/4)

BOARD SUFFIX : -14
MODEL DSR-80/80P/60/60P

SV-184 (3/4): SERVO SYSTEM

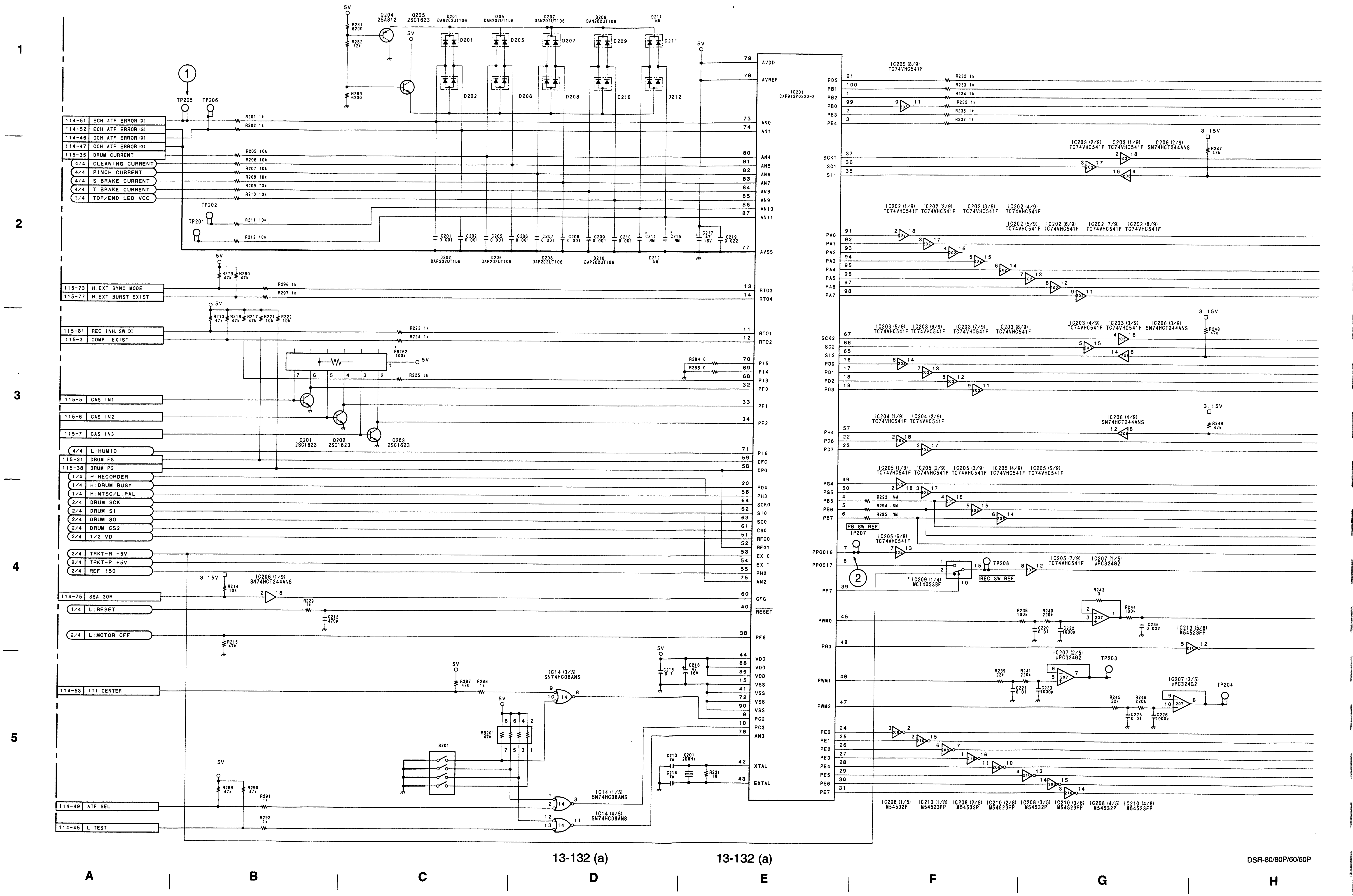

 SV-184 (3/4)

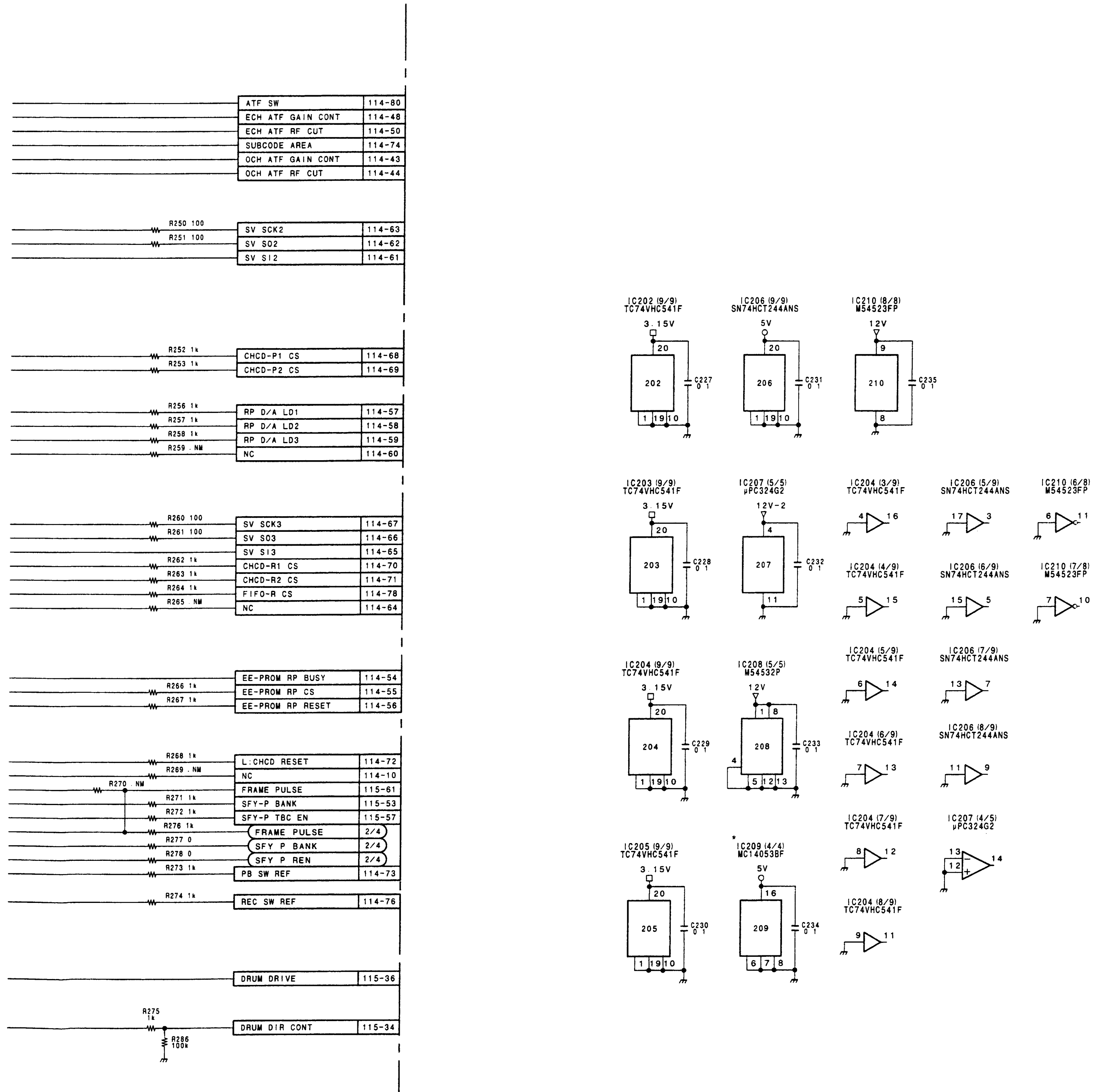

* SV-184A BOARD

REF NO.	CHANGED INFORMATION	LOT NO.
C211. 215	DELETED	706-
IC209	MC14053BF-T2 → MC14053BFEL	804-
R218-220	DELETED	706-
R226-228		
RB262	ADDED	

FIN. REF	
R	297
C	236
RB	201
D	212
Q	205
IC	210
X	
PS	
CL	208
S	201
TP	208
E	

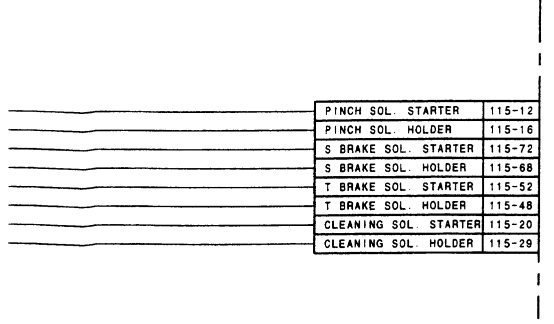

SV-184 (3/4)
BOARD SUFFIX : -14
MODEL DSR-80/80P/60/60P

SV-184 (4/4): SERVO SYSTEM

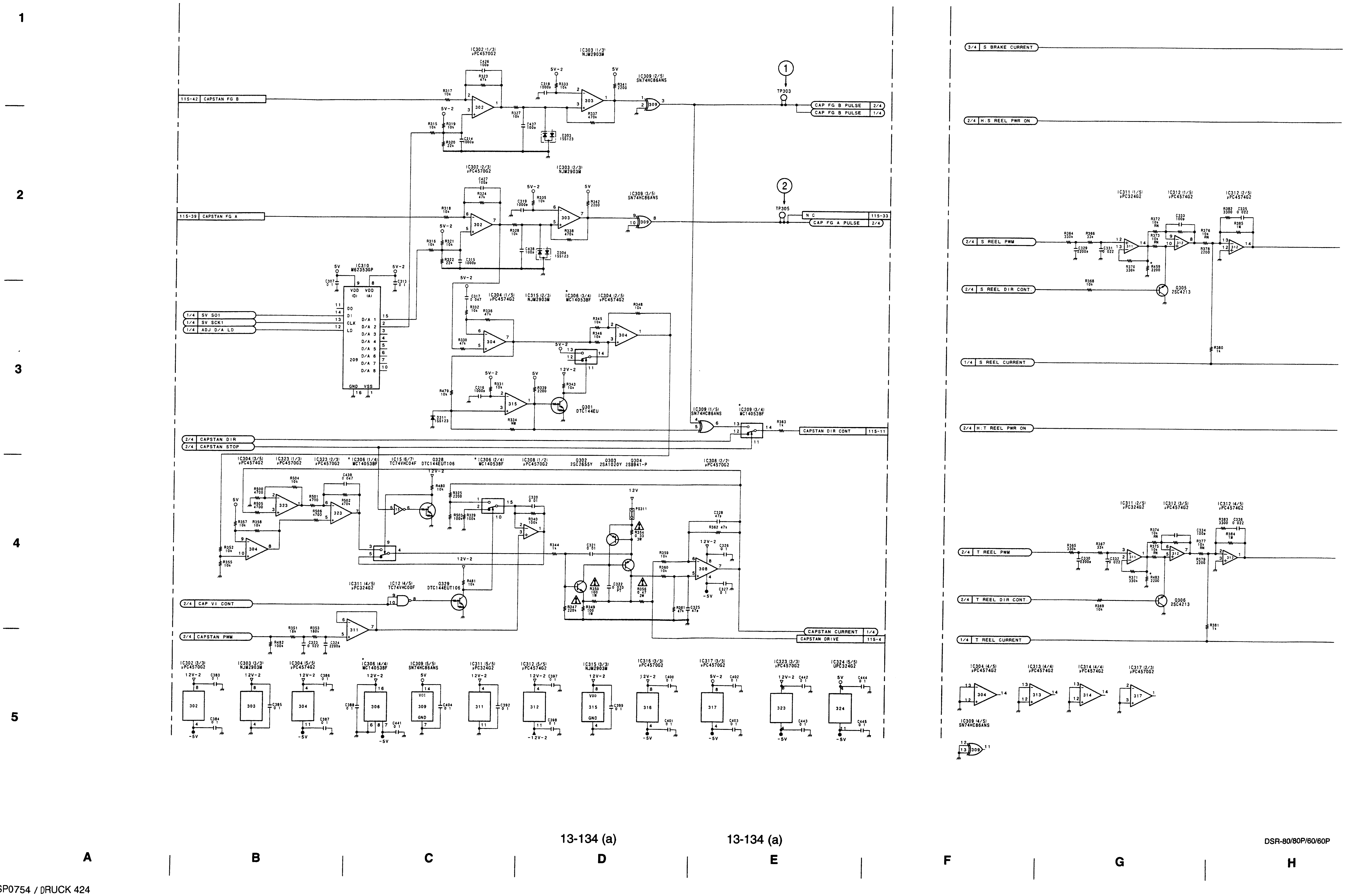

DSR-80/80P/60/60P

SONY-SP0754 / DRUCK 424

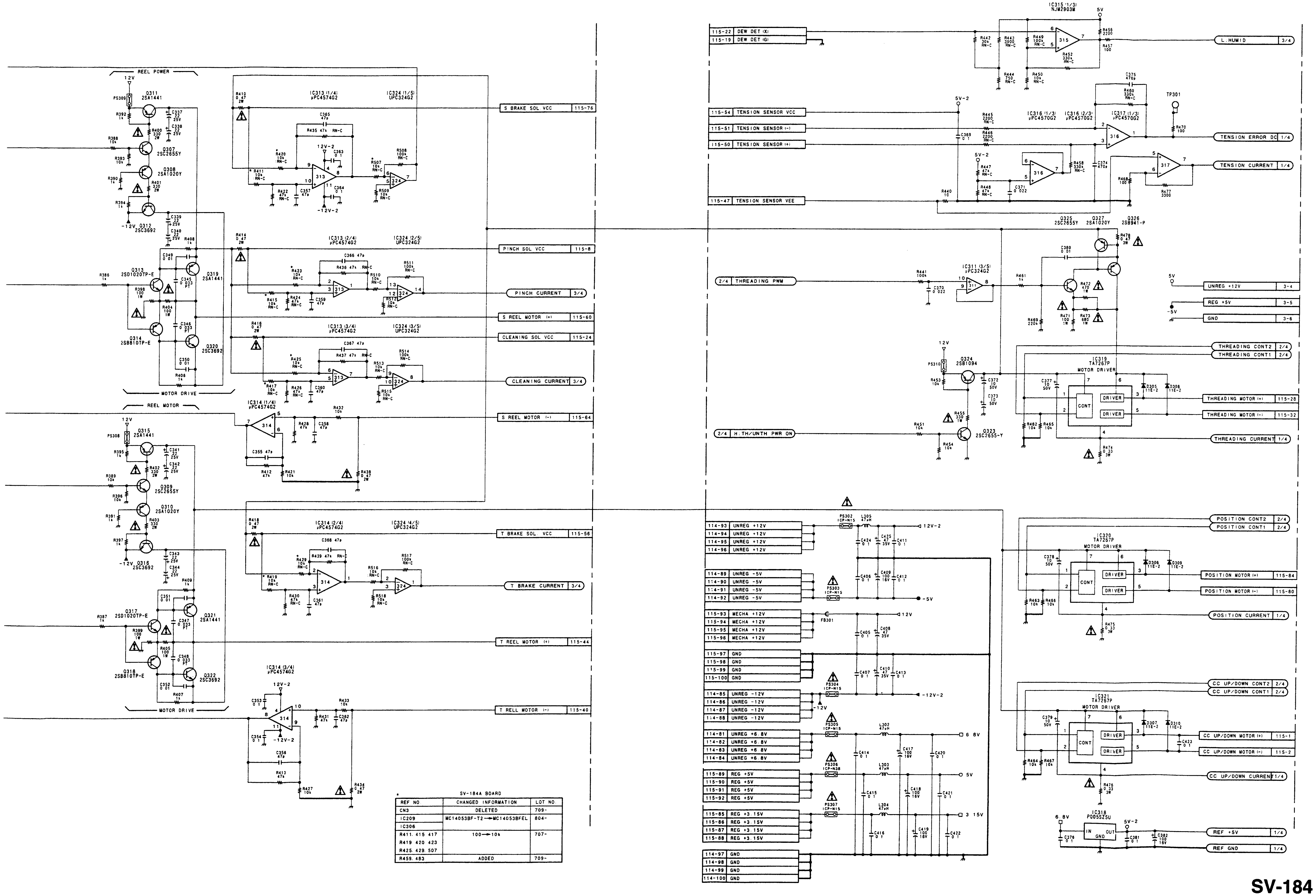

* SV-184A BOARD

REF NO.	CHANGED INFORMATION	LOT NO.
CN3	DELETED	709-
IC209 IC306	MC14053BF-T2 → MC14053BFEL	804-
R411. 415 417 R419 420 423 R425. 429. 507	100 → 10k	707-
R459. 483	ADDED	709-

FIN. REF	
R	518
C	445
RB	
D	311
Q	329
IC	324
X	
PS	311
L	305
S	
TP	306
E	302

SV-184 (4/4)

BOARD SUFFIX : -14
MODEL DSR-80/80P/60/60P

SV-184: SERVO SYSTEM

SV-184 (2/4)

① TP106 MODE: 75% Color Bar/PB (NTSC)

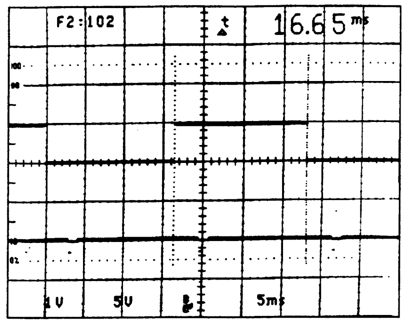

① TP106 MODE: 100% Color Bar/PB (PAL)

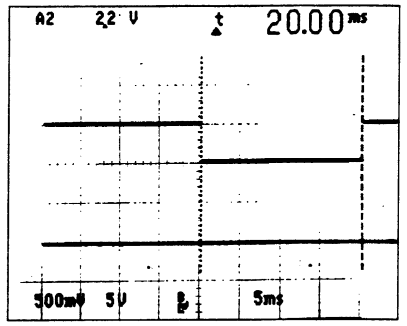

② TP107 MODE: 75% Color Bar/PB (NTSC)

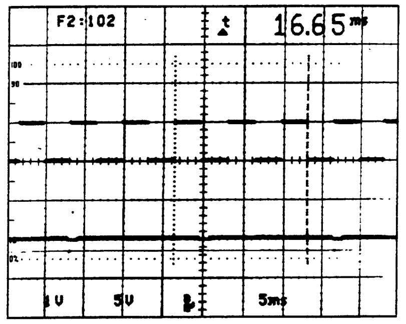

(VS. Ref. in)

② TP107 MODE: 100% Color Bar/PB (PAL)

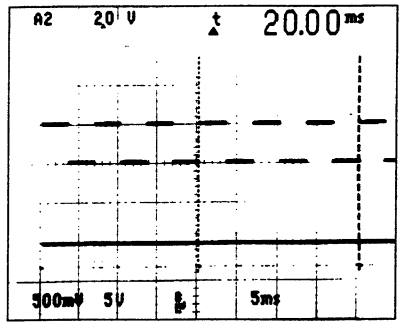

(VS. Ref. in)

② TP207 MODE: 75% Color Bar/PB (NTSC)
② TP107 MODE: 75% Color Bar/PB (NTSC)

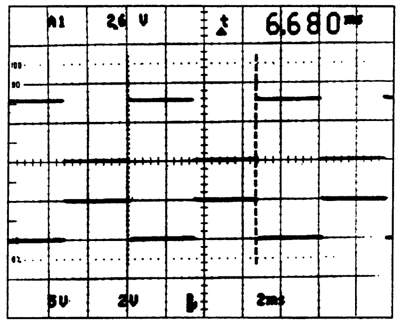

② TP207 MODE: 100% Color Bar/PB (PAL)
② TP107 MODE: 100% Color Bar/PB (PAL)

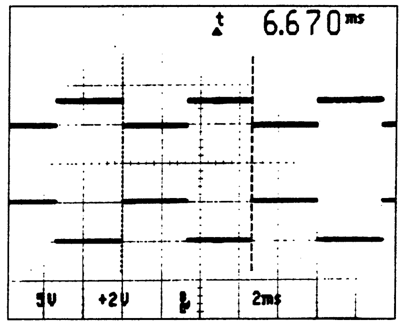

SV-184 (3/4)

① TP205 MODE: 75% Color Bar/PB (NTSC)

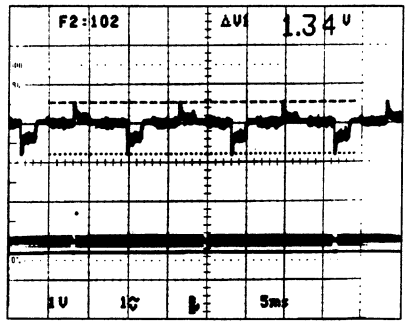

(15μ PB mode)

① TP205 MODE: 100% Color Bar/PB (PAL)

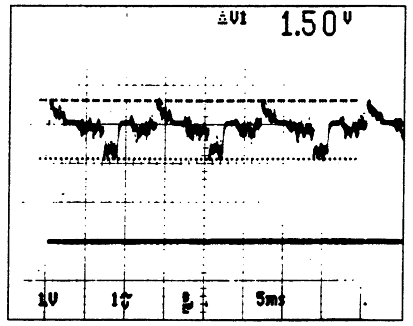

(15μ PB mode)

SV-184 (4/4)

① TP303 MODE: 75% Color Bar/PB (NTSC)
TP305 MODE: 75% Color Bar/PB (NTSC)

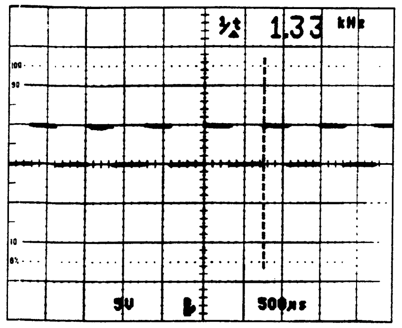

(15μ PB mode)

① TP305 MODE: 100% Color Bar/PB (PAL)
TP303 MODE: 100% Color Bar/PB (PAL)

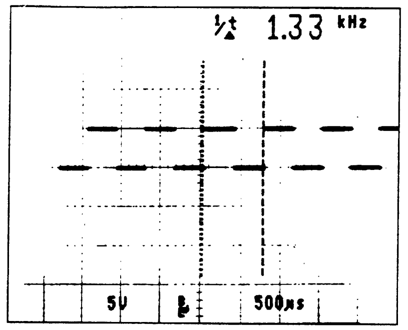

(15μ PB mode)

)NY-SP0754 / DRUCK 427

SV-184 (1/4): SERVO SYSTEM

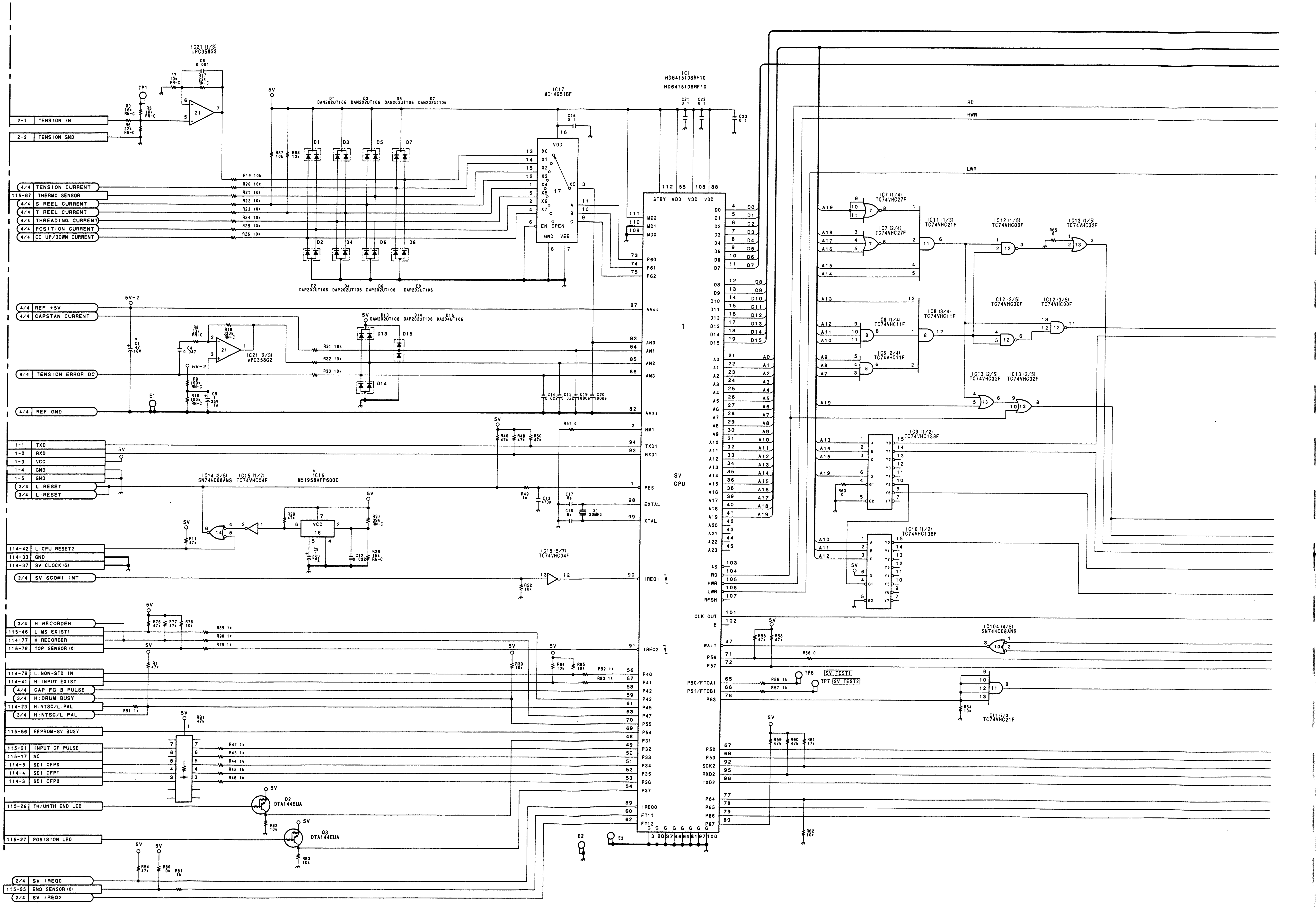

1

2

3

4

5

DSR-80/80P/60/60P

A | B | C | D | E | F | G | H

SONY-SP0754 / DRUCK 428

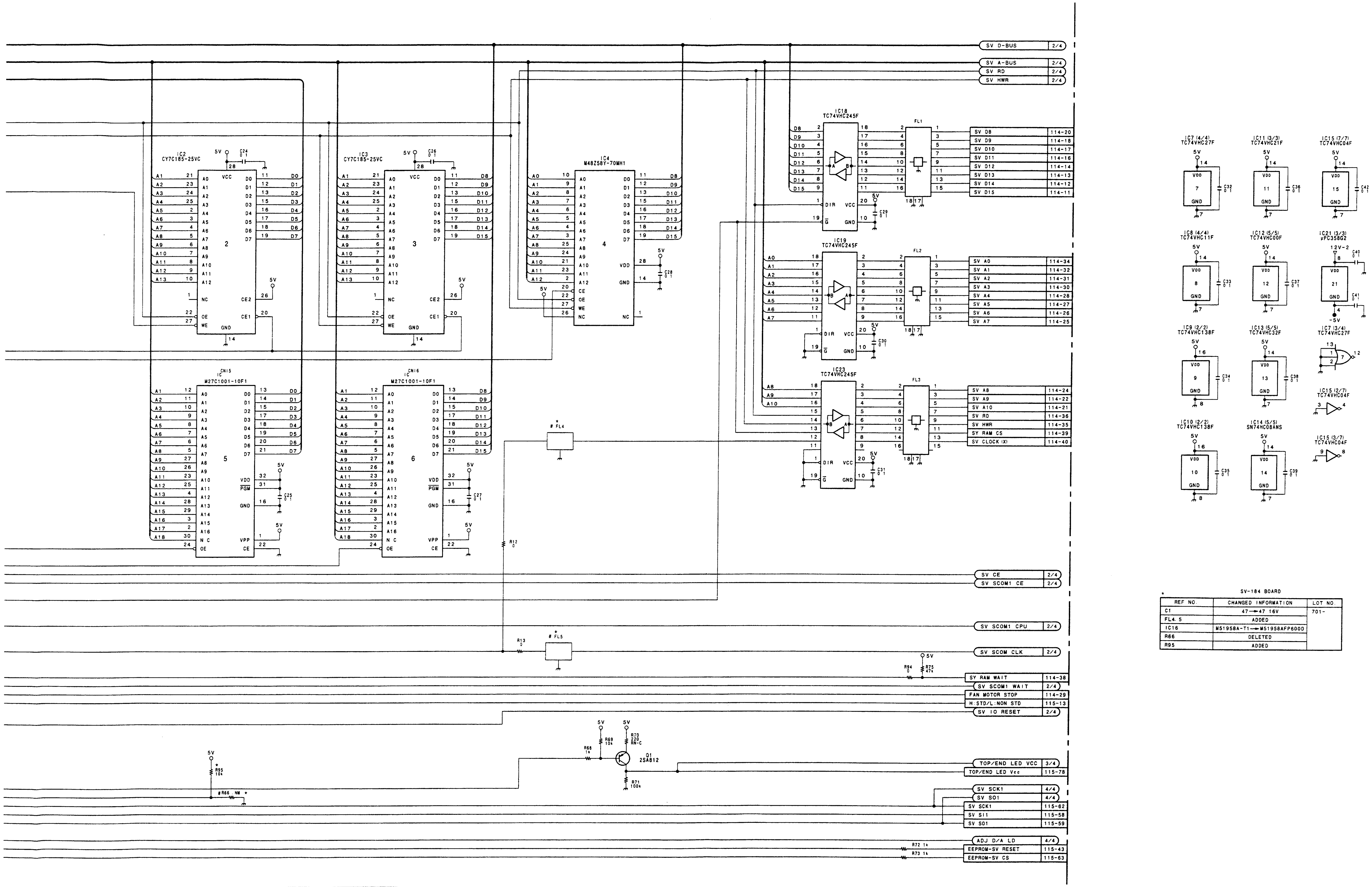

*

SV-184 BOARD

REF NO.	CHANGED INFORMATION	LOT NO.
C1	47 → 47 16V	701-
FL4. 5	ADDED	
IC16	M51958A-T1 → M51958AFP600D	
R66	DELETED	
R95	ADDED	

# SV-184 BOARD 1-664-947-	-11. 12	-13
FL4. 5	NM	1-233-314-11
R66	10K	NM

SV-184 (1/4)

BOARD SUFFIX : -11, 12, 13
MODEL DSR-80/80P/60/60P

SV-184 (2/4): SERVO SYSTEM

1
2
3
4
5

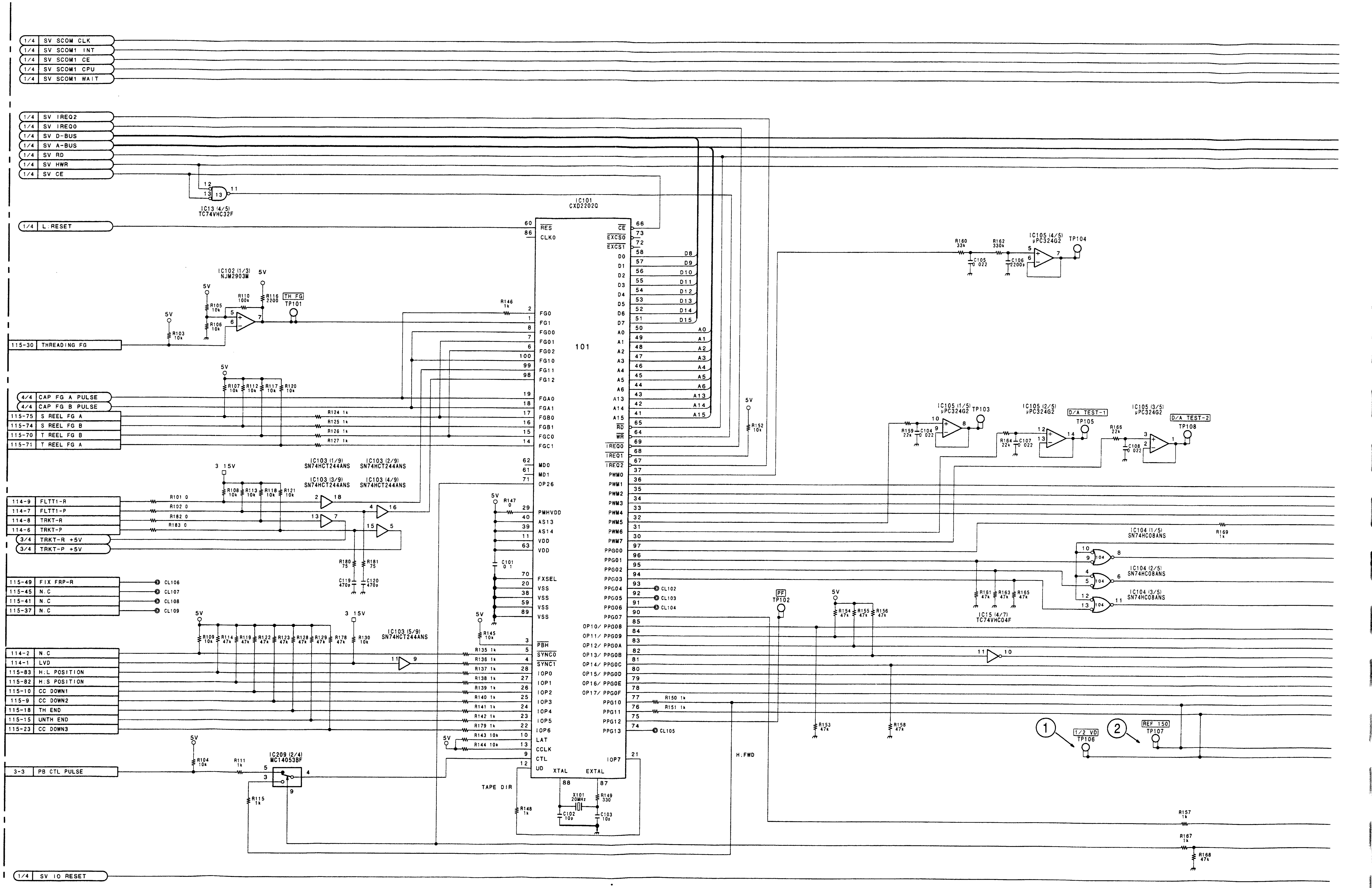

A | B | C | D | E | F | G | H

DSR-80/80P/60/60P

SONY-SP0754 / DRUCK 430

1

2

3

4

5

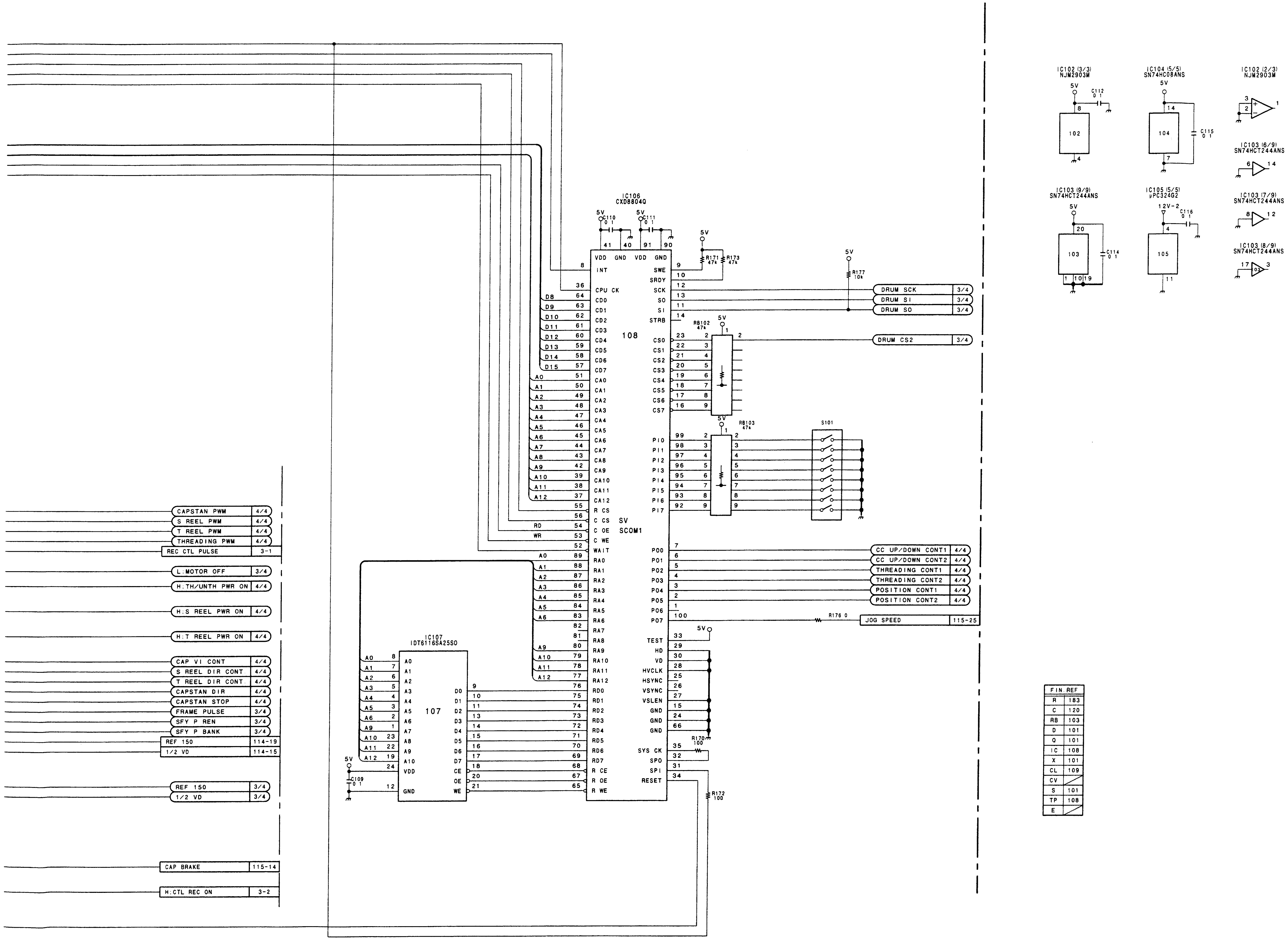

FIN. REF	
R	183
C	120
RB	103
D	101
Q	101
IC	108
X	101
CL	109
CV	
S	101
TP	108
E	

SV-184 (2/4)

BOARD SUFFIX : -11, 12, 13
MODEL DSR-80/80P/60/60P

SV-184 (3/4): SERVO SYSTEM

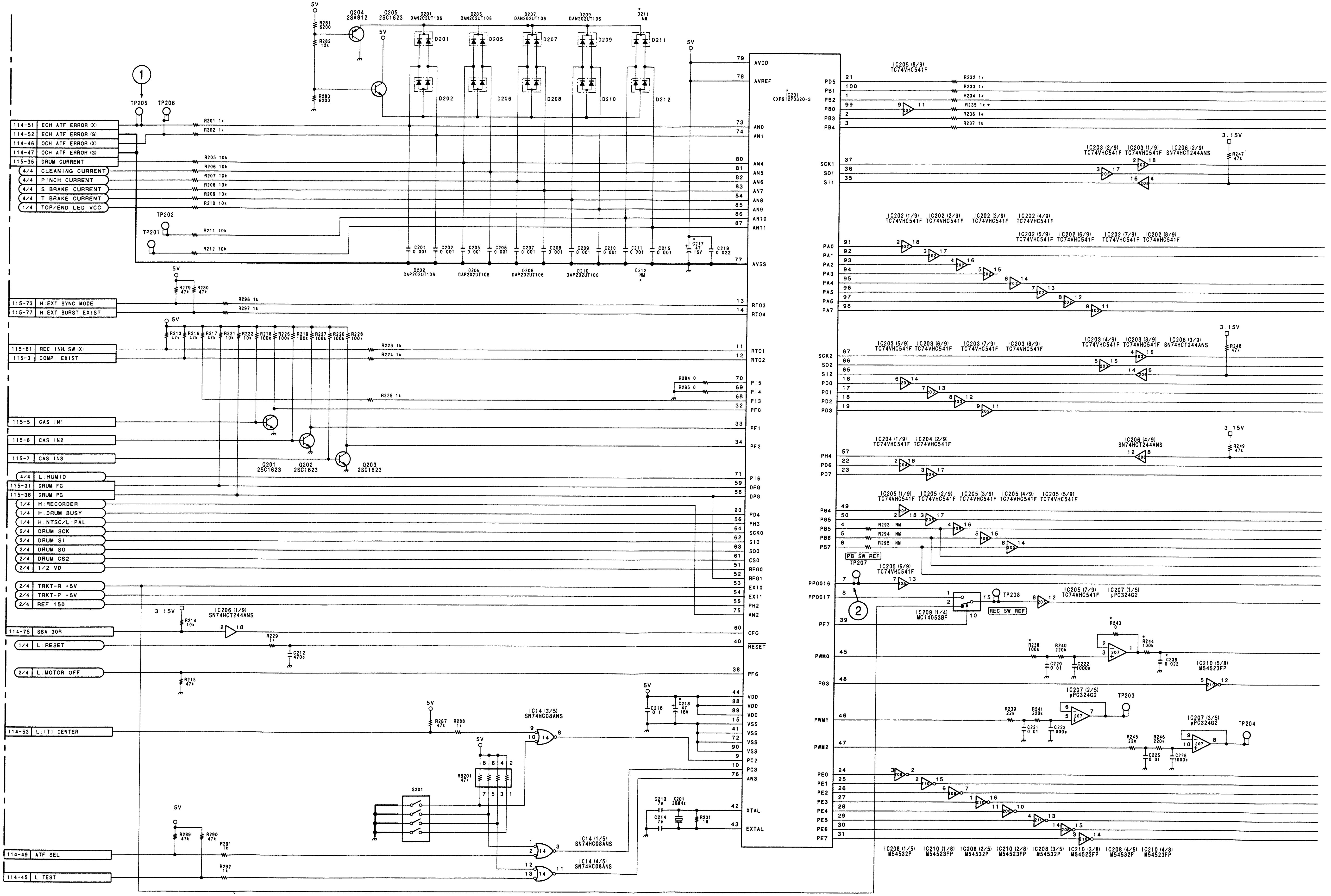

1 2 3 4 5

A B C D E F G H

SONY-SP0754 / DRUCK 432

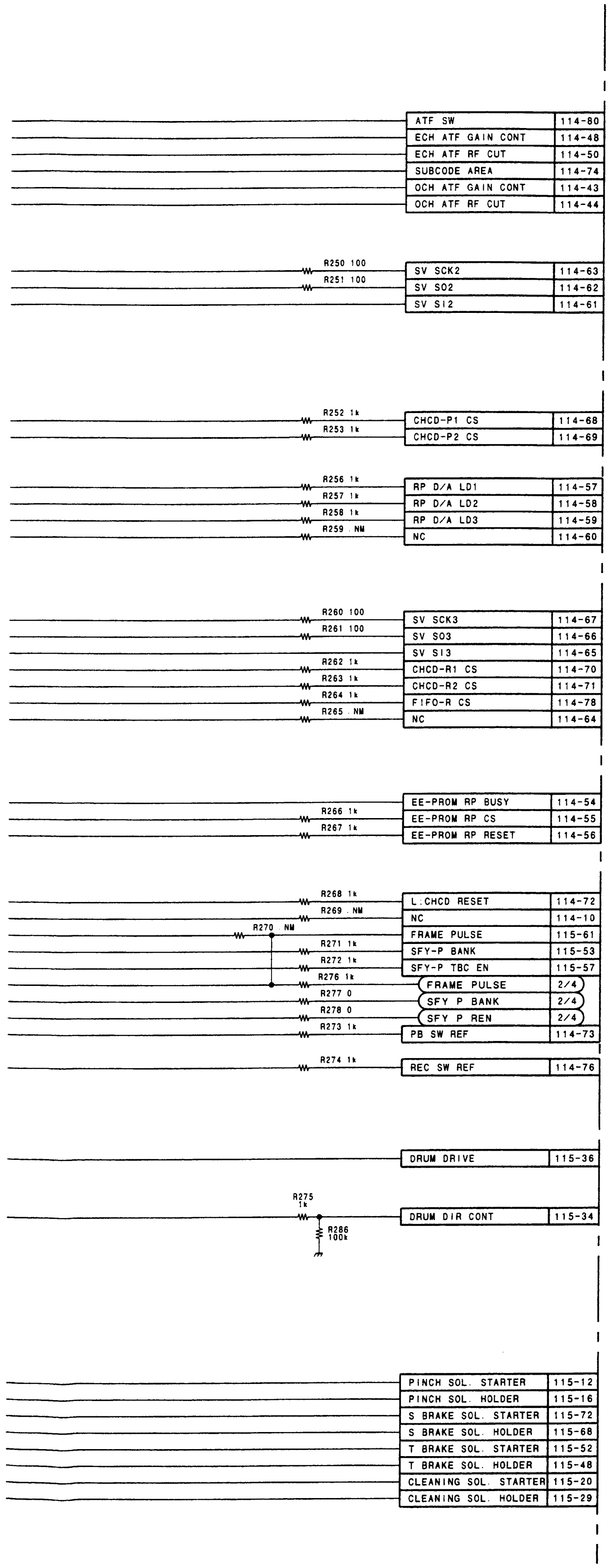

★ SV-184 BOARD

REF NO.	CHANGED INFORMATION	LOT NO.
C217, 218	47 → 47 16V	701-
C236	ADDED	
C270	DELETED	
IC201	CXP912032 → CXP912P032Q-3	610-
R235	ADDED	
R238	22k → 100k	701-
R243	10k → 0	
R244	1k → 100k	

★ SV-184A BOARD

REF NO.	CHANGED INFORMATION	LOT NO.
D211, 212	DELETED	701-

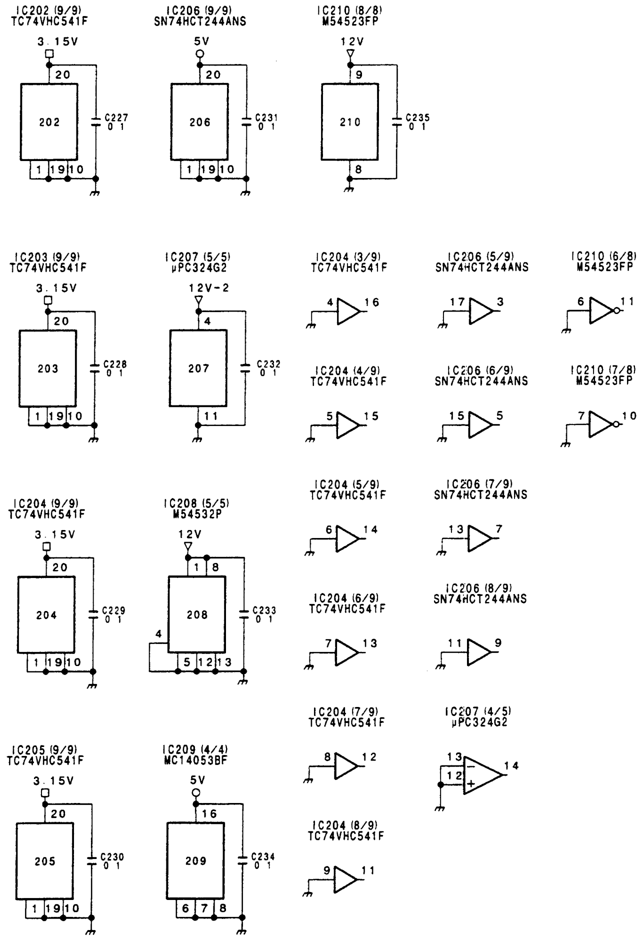

FIN. REF	
R	297
C	236
RB	201
D	212
Q	205
IC	210
X	
PS	
CL	208
S	201
TP	208
E	

SV-184 (3/4)

BOARD SUFFIX : -11, 12, 13
MODEL DSR-80/80P/60/60P

SV-184 (4/4): SERVO SYSTEM

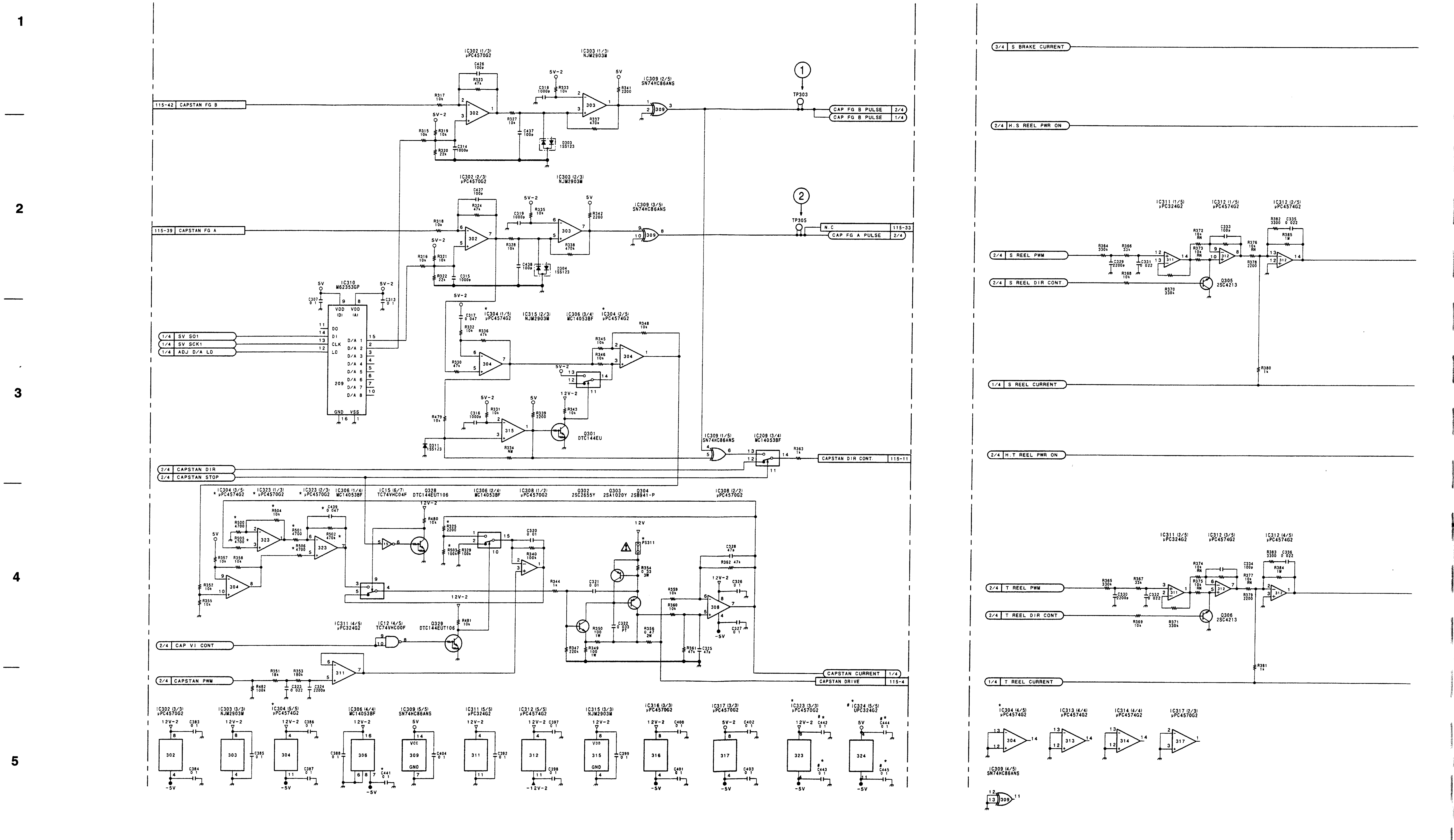

A B C D E F G H

1

2

3

4

5

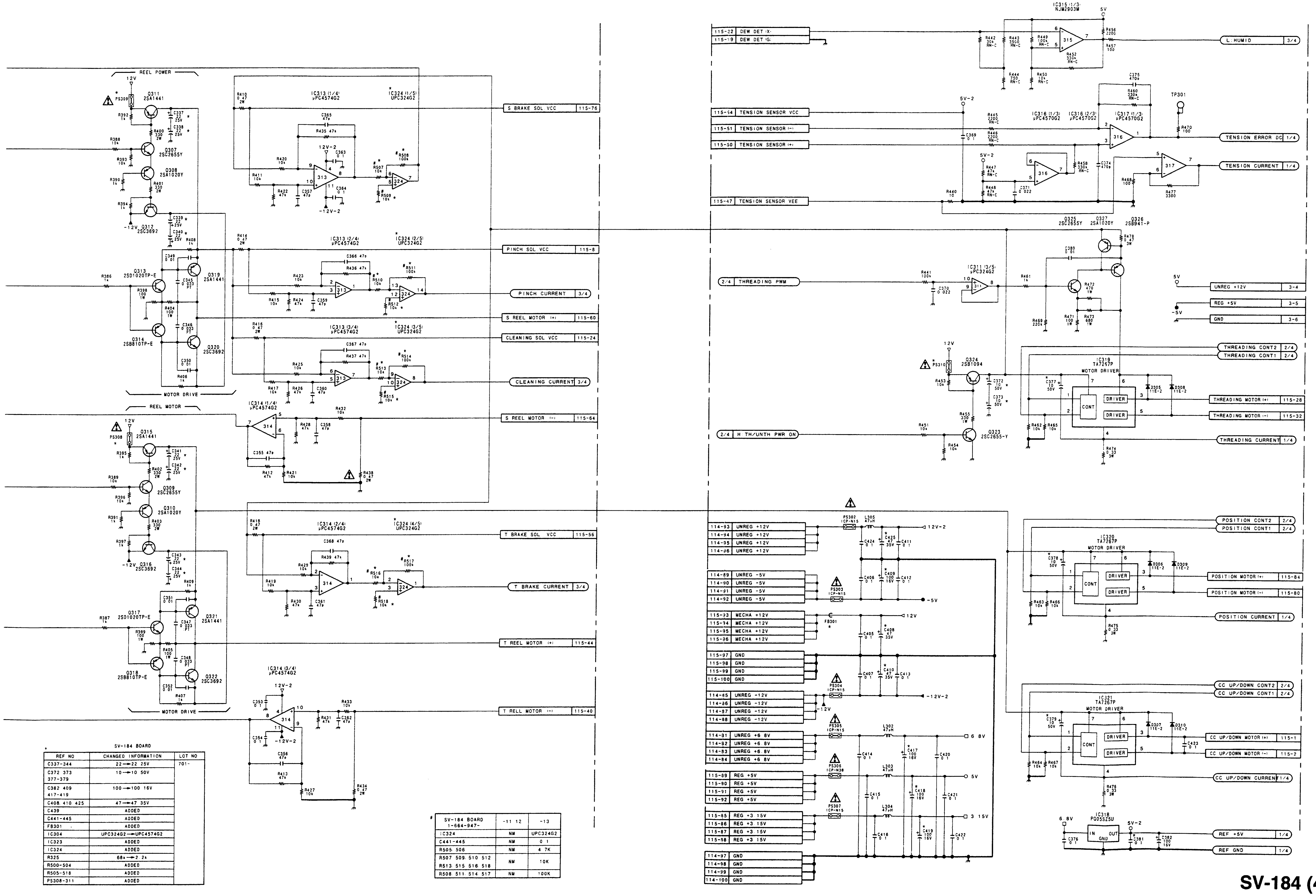

* SV-184 BOARD

REF NO	CHANGED INFORMATION	LOT NO
C337-344	22 → 22 25V	701-
C372 373 377-379	10 → 10 50V	
C382 409 417-419	100 → 100 16V	
C408, 410, 425	47 → 47 35V	
C439	ADDED	
C441-445	ADDED	
FB301	ADDED	
IC304	UPC324G2 → UPC4574G2	
IC323	ADDED	
IC324	ADDED	
R325	68k → 2.2k	
R500-504	ADDED	
R505-518	ADDED	
PS308-311	ADDED	

# SV-184 BOARD 1-664-947-	-11 12	-13
IC324	NM	UPC324G2
C441-445	NM	0 1
R505, 506	NM	4 7K
R507 509, 510 512 R513, 515, 516, 518	NM	10K
R508, 511, 514, 517	NM	100K

FIN REF	
R	518
C	445
RB	
D	311
Q	329
IC	324
X	
PS	311
L	305
S	
TP	306
E	302

SV-184 (4/4)

BOARD SUFFIX : -11, 12, 13
MODEL DSR-80/80P/60/60P

ƆNY-SP0754 / DRUCK 435

SY-241/241B (1/4): SYSTEM CONTROL

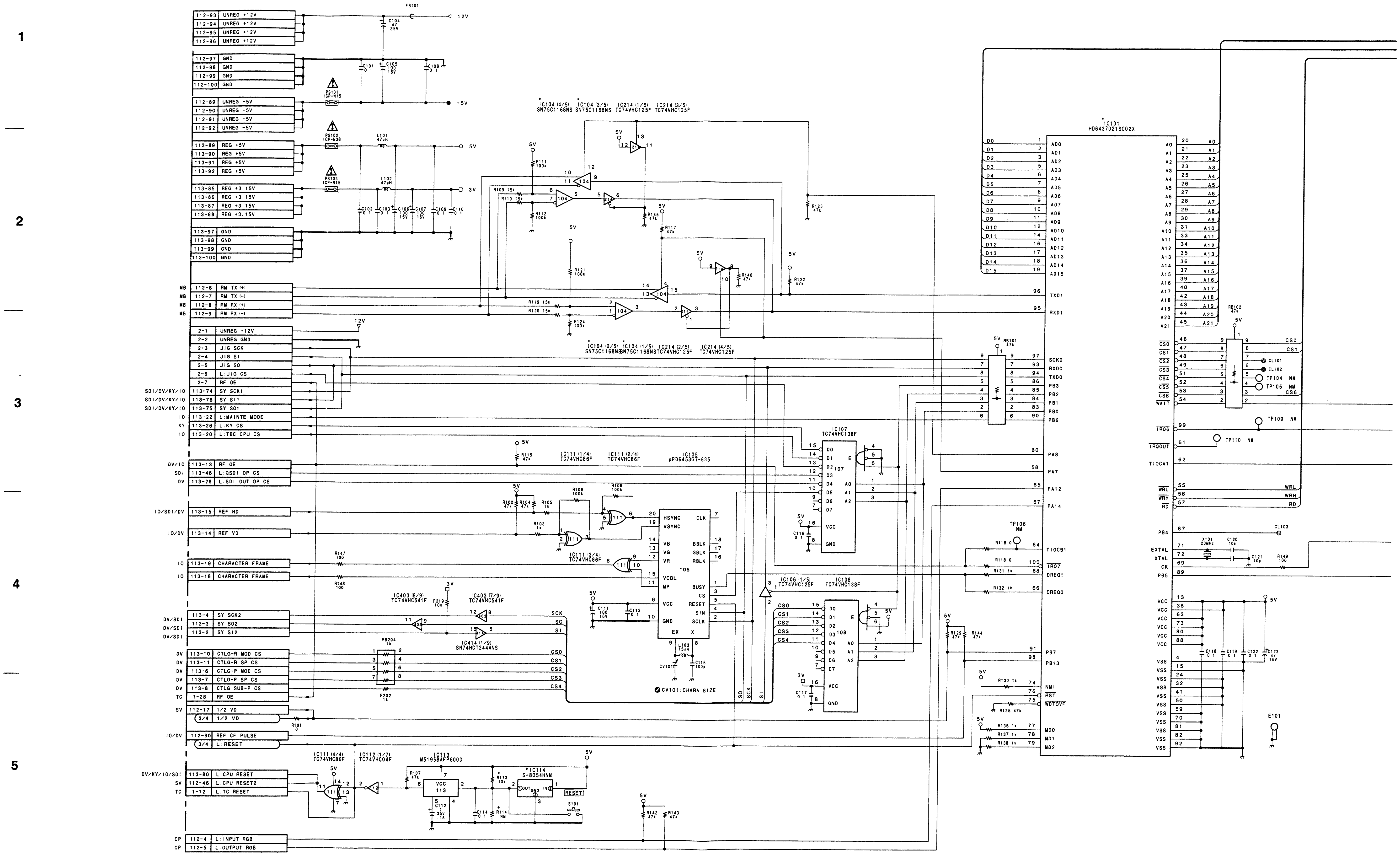

 SY-241/241B (1/4)

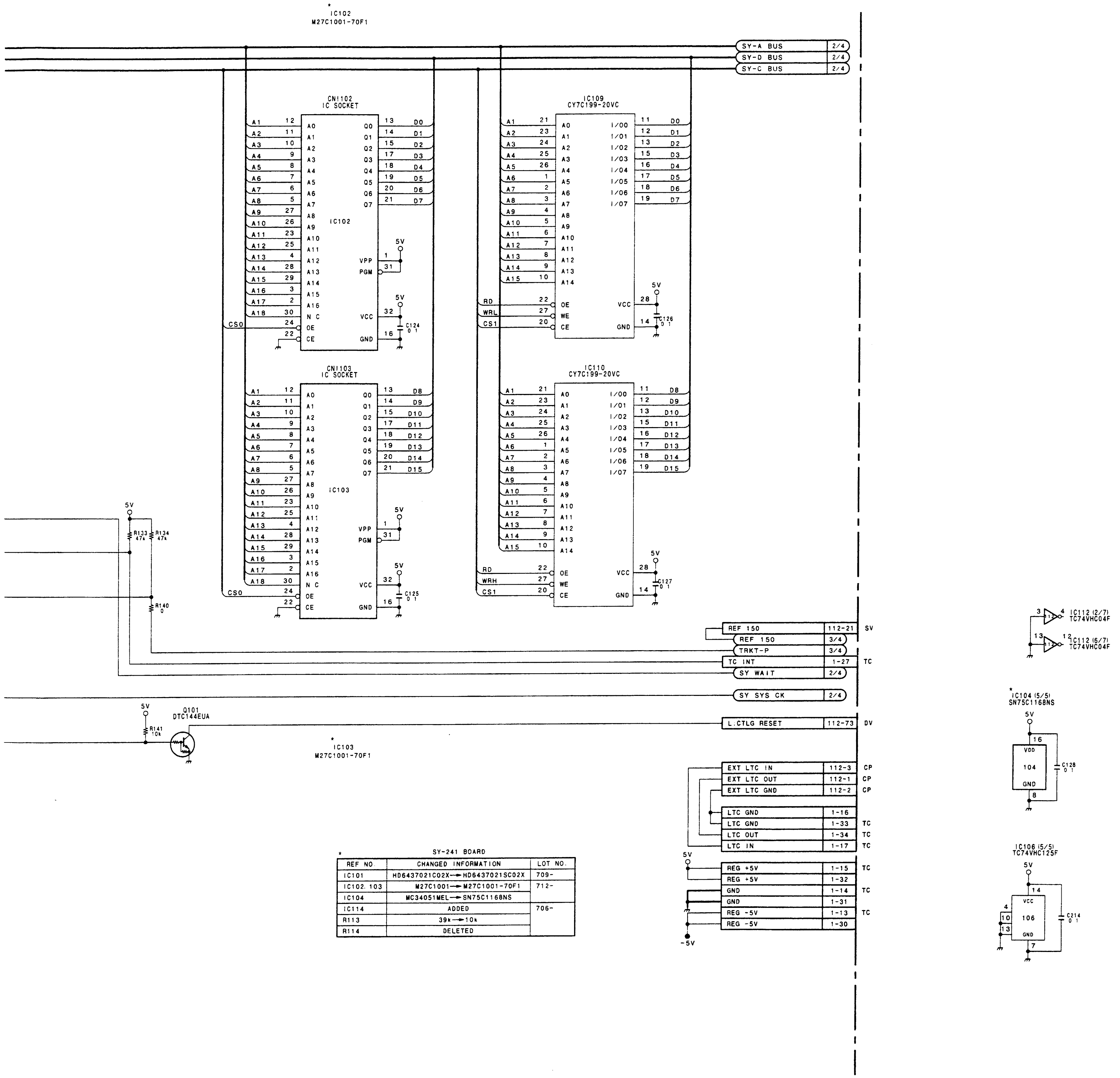

* SY-241 BOARD

REF NO.	CHANGED INFORMATION	LOT NO.
IC101	HD6437021C02X→HD6437021SC02X	709-
IC102, 103	M27C1001→M27C1001-70F1	712-
IC104	MC34051MEL→SN75C1168NS	
IC114	ADDED	706-
R113	39k→10k	
R114	DELETED	

	DSR-80/80P	DSR-60/60P
C401	0.1	NO MOUNT
C402	0.1	NO MOUNT
C403	0.1	NO MOUNT
C404	0.1	NO MOUNT
C406	NO MOUNT	0.1
C407	NO MOUNT	0.1
C408	0.1	NO MOUNT
C409	0.1	NO MOUNT
C410	0.1	NO MOUNT
C411	NO MOUNT	0.1
C412	0.1	NO MOUNT
C413	NO MOUNT	0.1
C414	0.1	NO MOUNT
C415	0.1	NO MOUNT
C416	NO MOUNT	0.1
IC302	TC74VHC541F	NO MOUNT
IC401	CY7C185-25VCTEL	NO MOUNT
IC402	CXD8804Q	NO MOUNT
IC404	TC74VHC541F	NO MOUNT
IC405	SN74HCT244ANS	NO MOUNT
IC407	NO MOUNT	TC74VHC32F
IC408	NO MOUNT	TC74VHC374F
IC409	NO MOUNT	TC74VHC245F
IC410	CY7C185-25VCTEL	NO MOUNT
IC411	CXD8804Q	NO MOUNT
IC412	TC74VHC541F	NO MOUNT
IC413	NO MOUNT	TC74VHC374F
IC415	NO MOUNT	TC74VHCT541F
R401	47K	NO MOUNT
R402	100	NO MOUNT
R403	47K	NO MOUNT
R404	100	NO MOUNT
R407	47K	NO MOUNT
R409	47K	NO MOUNT
R410	100	NO MOUNT
R411	47K	NO MOUNT
R412	100	NO MOUNT
R416	1K	NO MOUNT
RB401	47K	NO MOUNT
RB404	1K	NO MOUNT
RB405	1K	NO MOUNT
RB408	47K	NO MOUNT
RB409	NO MOUNT	47K
RB412	1K	NO MOUNT
RB412	1K	NO MOUNT

1 2 3 4 5

SY-241/241B (1/4)
BOARD SUFFIX : -14
MODEL DSR-80/80P/60/60P

SY-241/241B (2/4): SYSTEM CONTROL

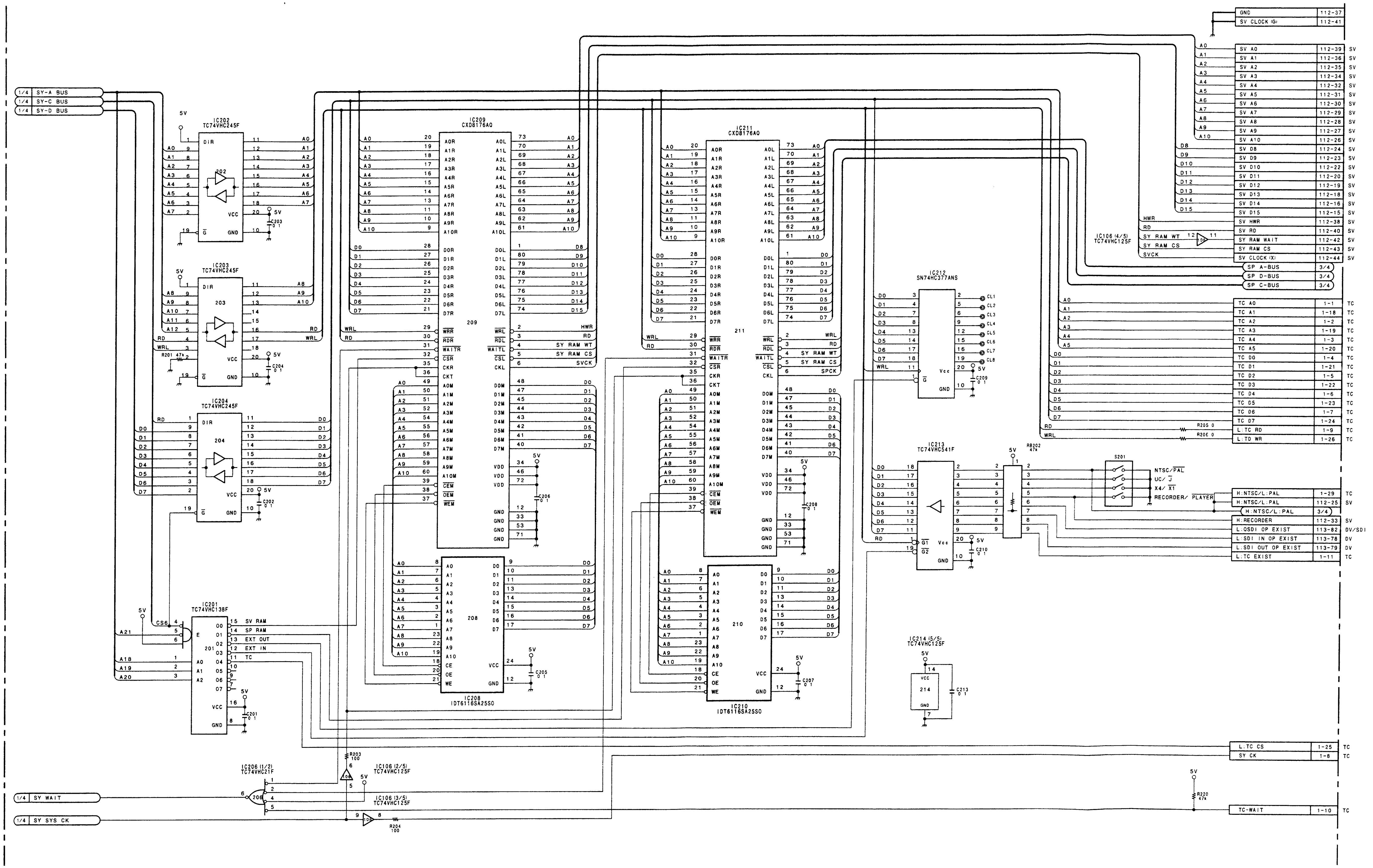

1
2
3
4
5

SY-241/241B (2/4)
BOARD SUFFIX : -14
MODEL DSR-80/80P/60/60P

 SY-241/241B (3/4)

SY-241/241B (3/4): SYSTEM CONTROL

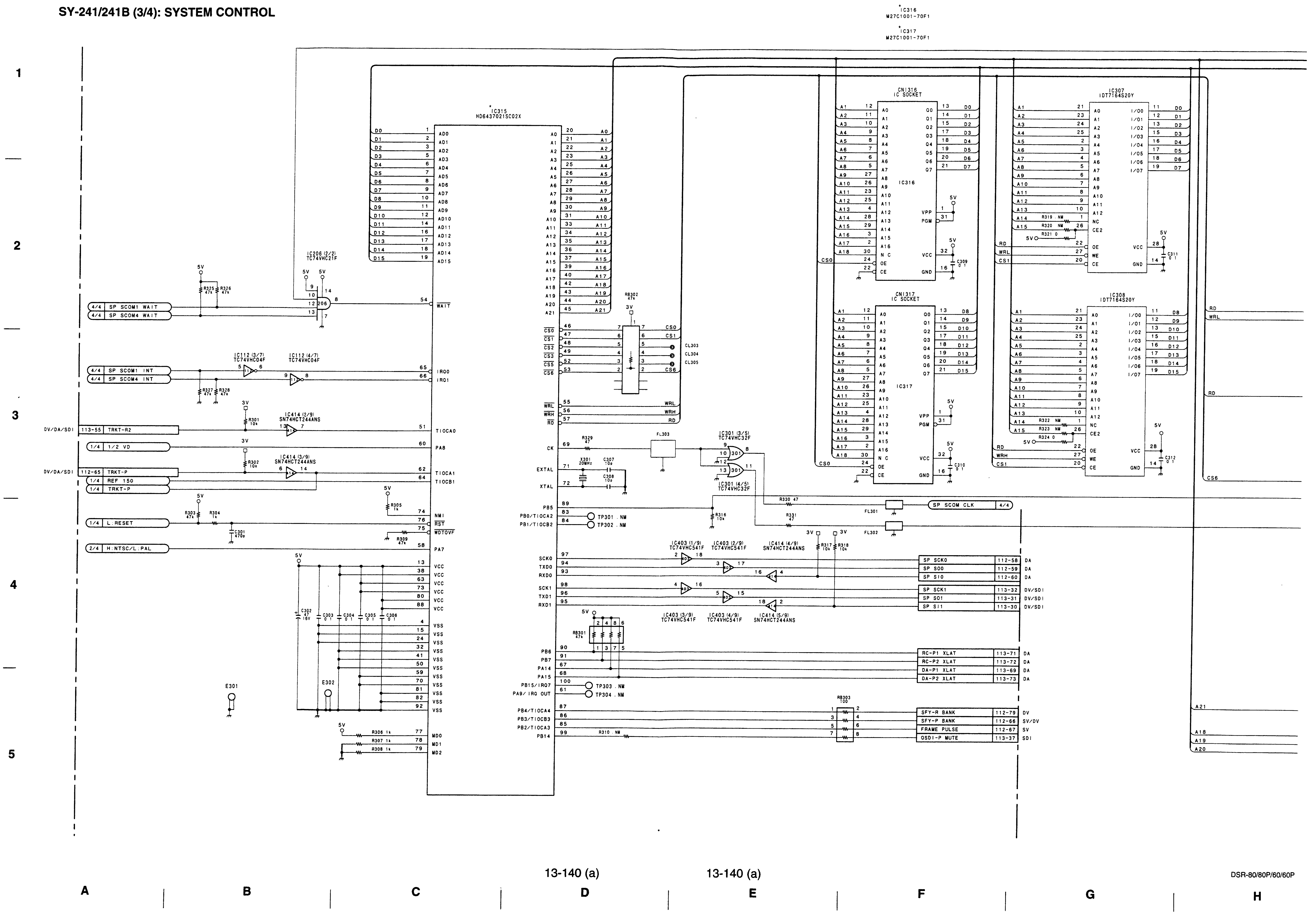

 13-140 (a)

SONY-SP0754 / DRUCK 440

 SY-241/241B (3/4)

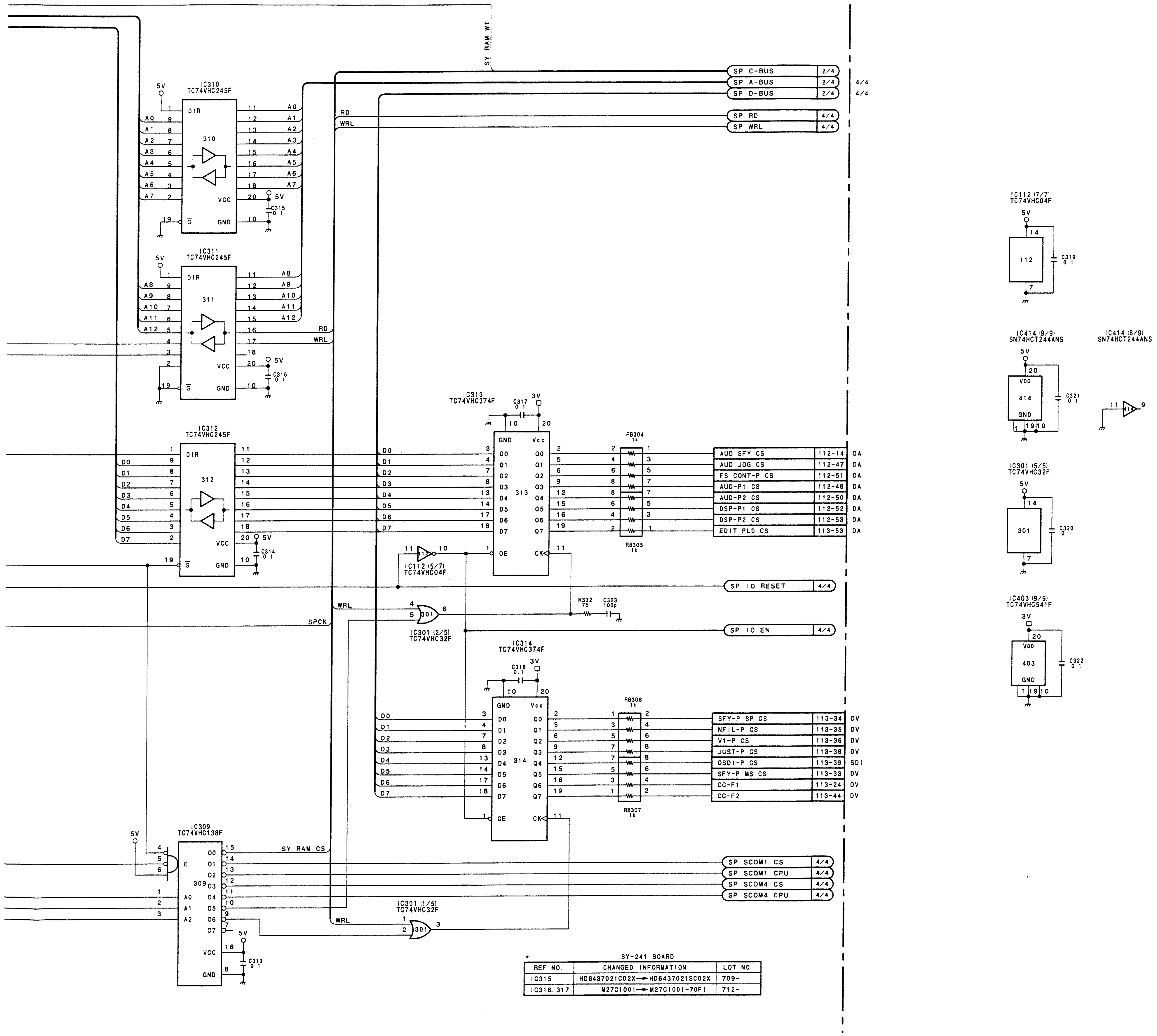

* SY-241 BOARD

REF NO.	CHANGED INFORMATION	LOT NO.
IC315	HD6437021C02X → HD6437021SC02X	709-
IC316. 317	M27C1001 → M27C1001-70F1	712-

SY-241/241B (3/4)

BOARD SUFFIX : -14
MODEL DSR-80/80P/60/60P

 13-141 (a)

I | J | K | L | M | N | O | P

ONY-SP0754 / DRUCK 441

SY-241/241B (4/4): SYSTEM CONTROL

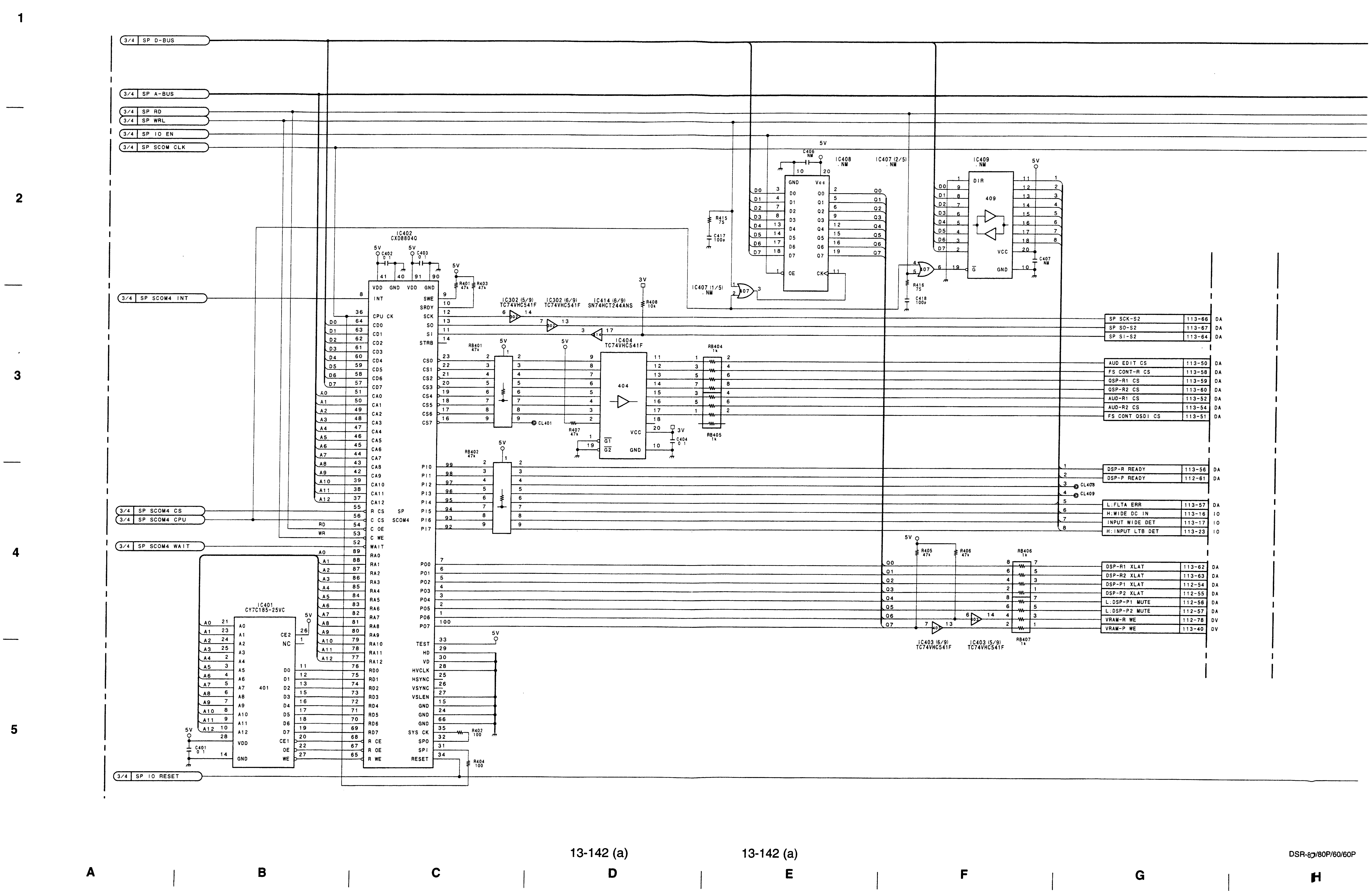

 SY-241/241B (4/4)

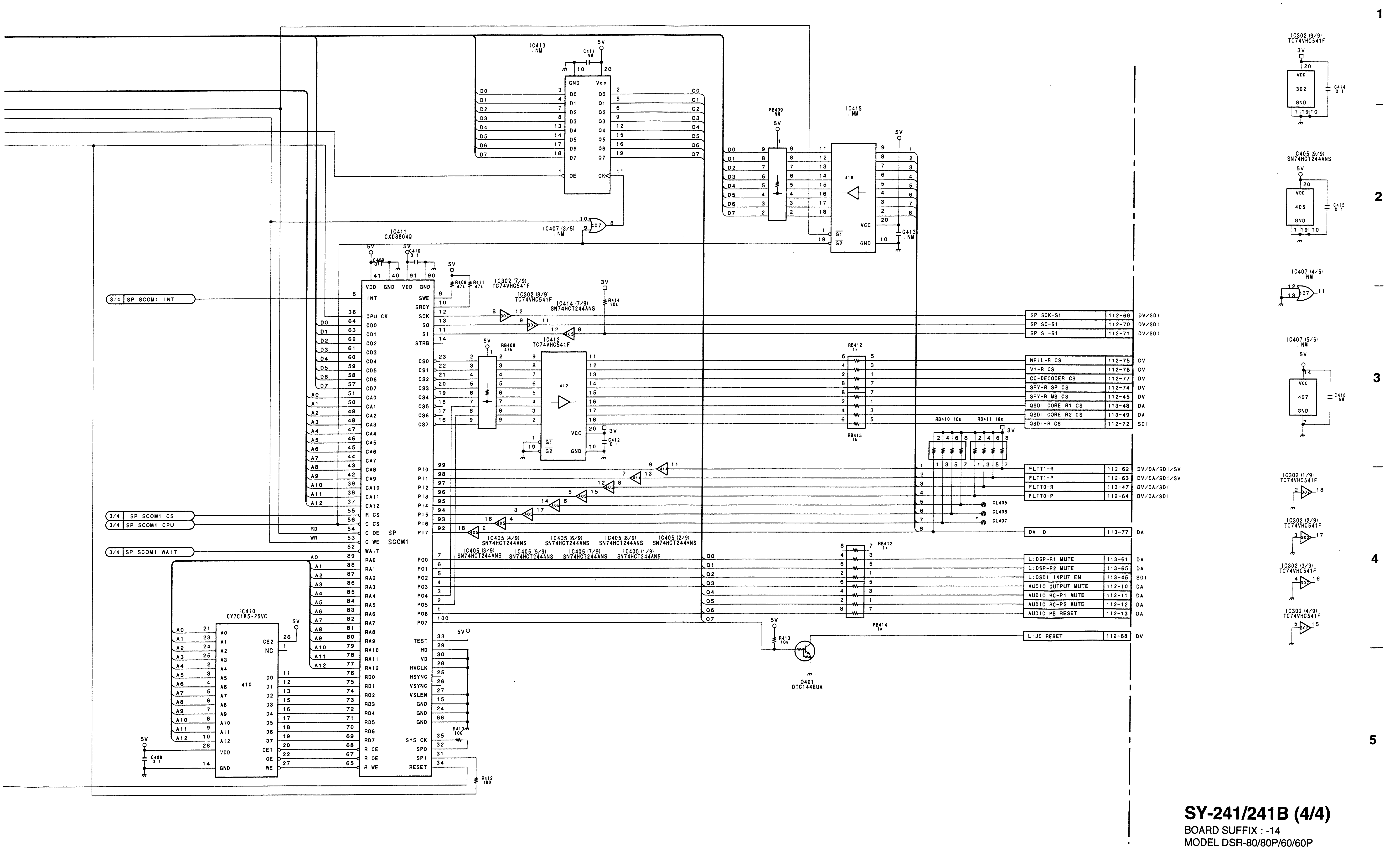

SY-241/241B (4/4)

BOARD SUFFIX : -14
MODEL DSR-80/80P/60/60P

SY-241/241B (1/4): SYSTEM CONTROL

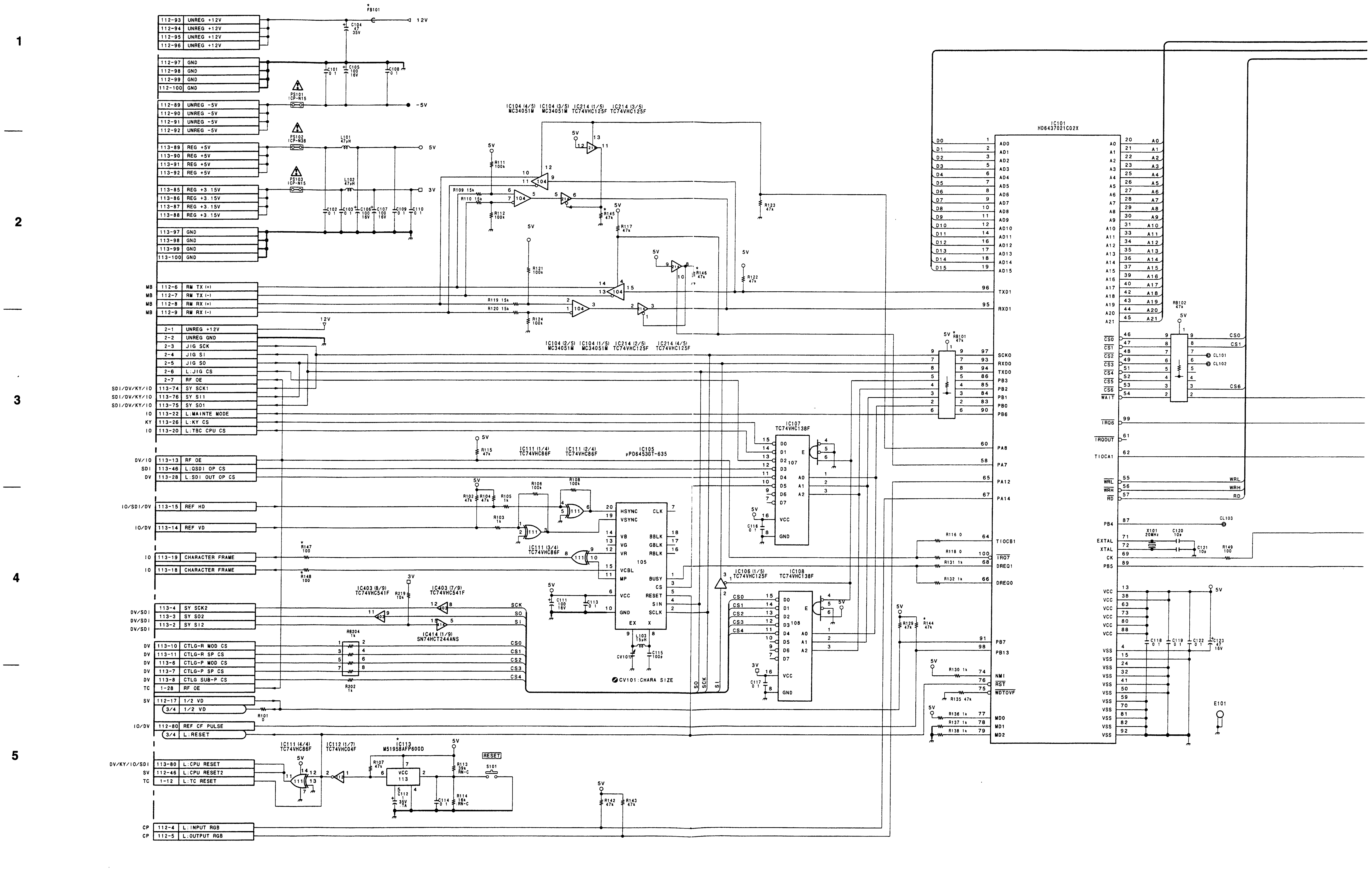

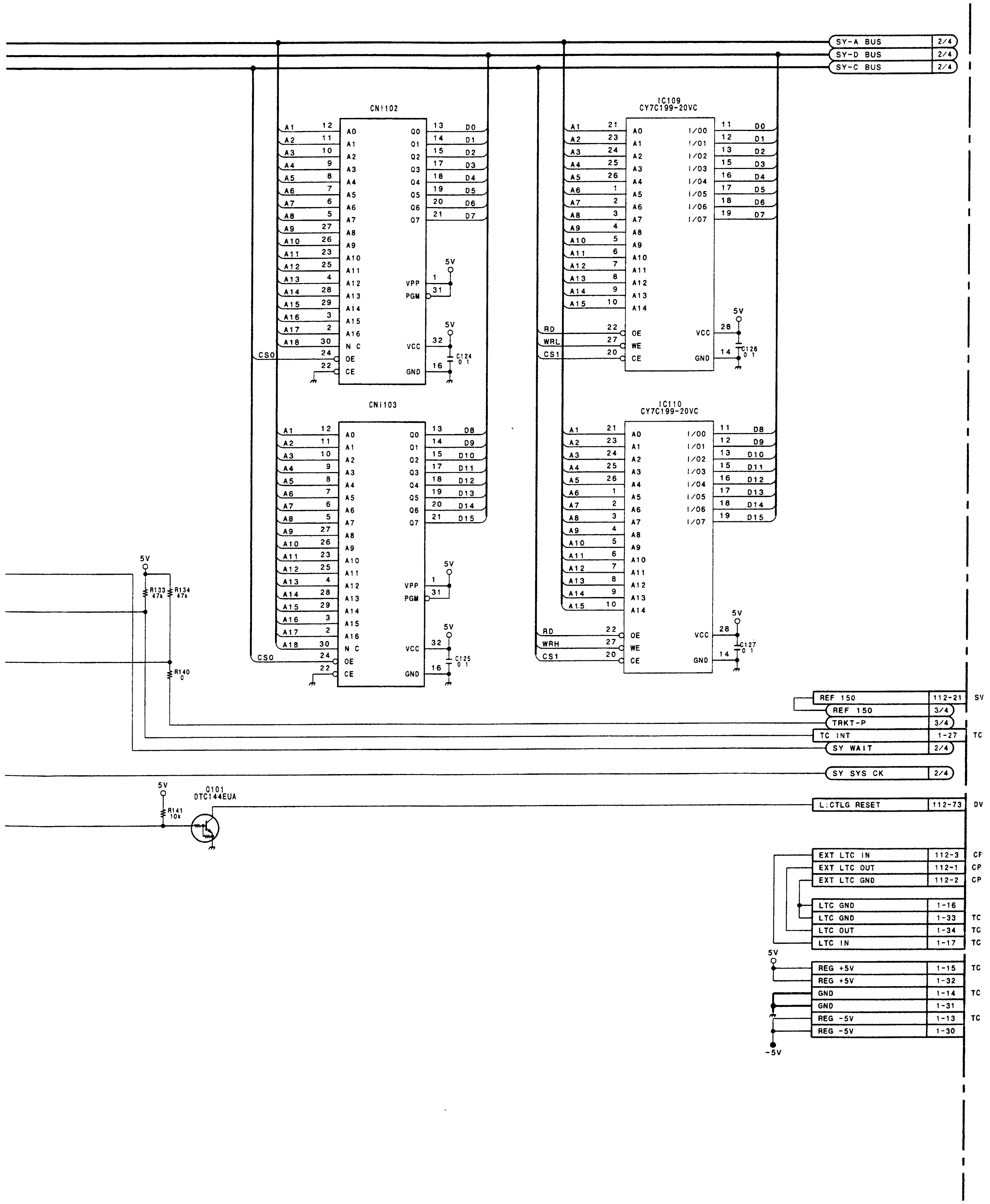

* SY-241 BOARD

REF NO.	CHANGED INFORMATION	LOT NO.
FB101	ADDED	701-
IC113	M51958A-T1 → M51958AFP300D	

* SY-241B BOARD

REF NO.	CHANGED INFORMATION	LOT NO.
FB101	ADDED	701-
IC113	M51958A-T1 → M51958AFP600D	
R144-149	ADDED	610-

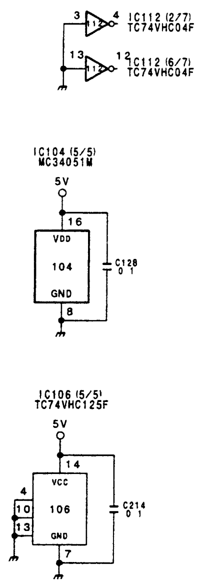

*	DSR-80/80P	DSR-60/60P
C401	0.1	NO MOUNT
C402	0.1	NO MOUNT
C403	0.1	NO MOUNT
C404	0.1	NO MOUNT
C406	NO MOUNT	0.1
C407	NO MOUNT	0.1
C408	0.1	NO MOUNT
C409	0.1	NO MOUNT
C410	0.1	NO MOUNT
C411	NO MOUNT	0.1
C412	0.1	NO MOUNT
C413	NO MOUNT	0.1
C414	0.1	NO MOUNT
C415	0.1	NO MOUNT
C416	NO MOUNT	0.1
IC302	TC74VHC541F	NO MOUNT
IC401	CY7C185-25VCTEL	NO MOUNT
IC402	CXD8804Q	NO MOUNT
IC404	TC74VHC541F	NO MOUNT
IC405	SN74HCT244ANS	NO MOUNT
IC407	NO MOUNT	TC74VHC32F
IC408	NO MOUNT	TC74VHC374F
IC409	NO MOUNT	TC74VHC245F
IC410	CY7C185-25VCTEL	NO MOUNT
IC411	CXD8804Q	NO MOUNT
IC412	TC74VHC541F	NO MOUNT
IC413	NO MOUNT	TC74VHC374F
IC415	NO MOUNT	TC74VHCT541F
R330	47	NO MOUNT
R401	47K	NO MOUNT
R402	100	NO MOUNT
R403	47K	NO MOUNT
R404	100	NO MOUNT
R407	47K	NO MOUNT
R409	47K	NO MOUNT
R410	100	NO MOUNT
R411	47K	NO MOUNT
R412	100	NO MOUNT
R416	1K	NO MOUNT
RB401	47K	NO MOUNT
RB404	1K	NO MOUNT
RB405	1K	NO MOUNT
RB408	47K	NO MOUNT
RB409	NO MOUNT	47K
RB412	1K	NO MOUNT
RB415	1K	NO MOUNT

SY-241/241B (1/4)

BOARD SUFFIX : -11, 12, 13
MODEL DSR-80/80P/60/60P

SY-241/241B (2/4)

SY-241/241B (2/4): SYSTEM CONTROL

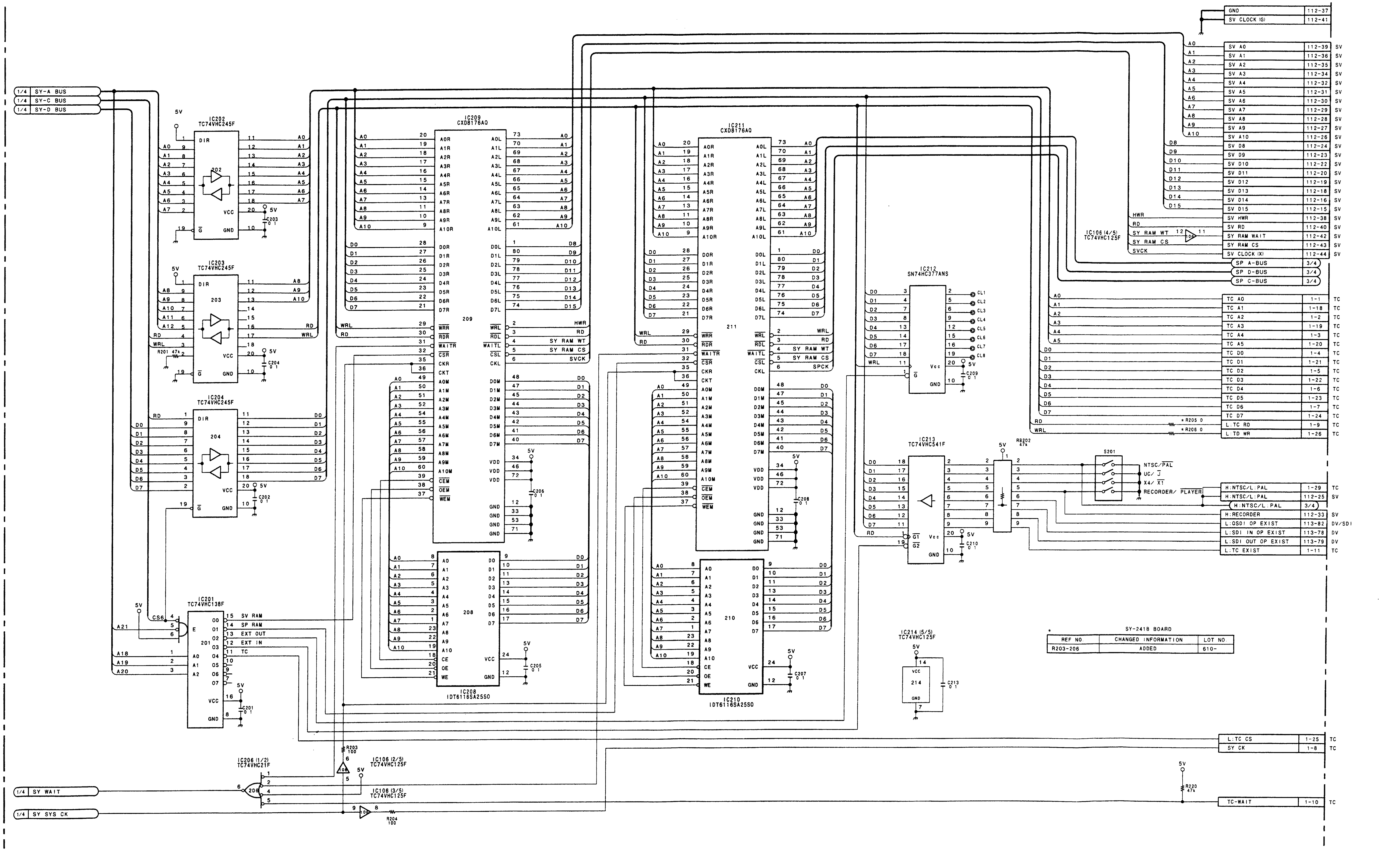

SY-241/241B (2/4)
BOARD SUFFIX : -11, 12, 13
MODEL DSR-80/80P/60/60P

SY-241/241B (3/4): SYSTEM CONTROL

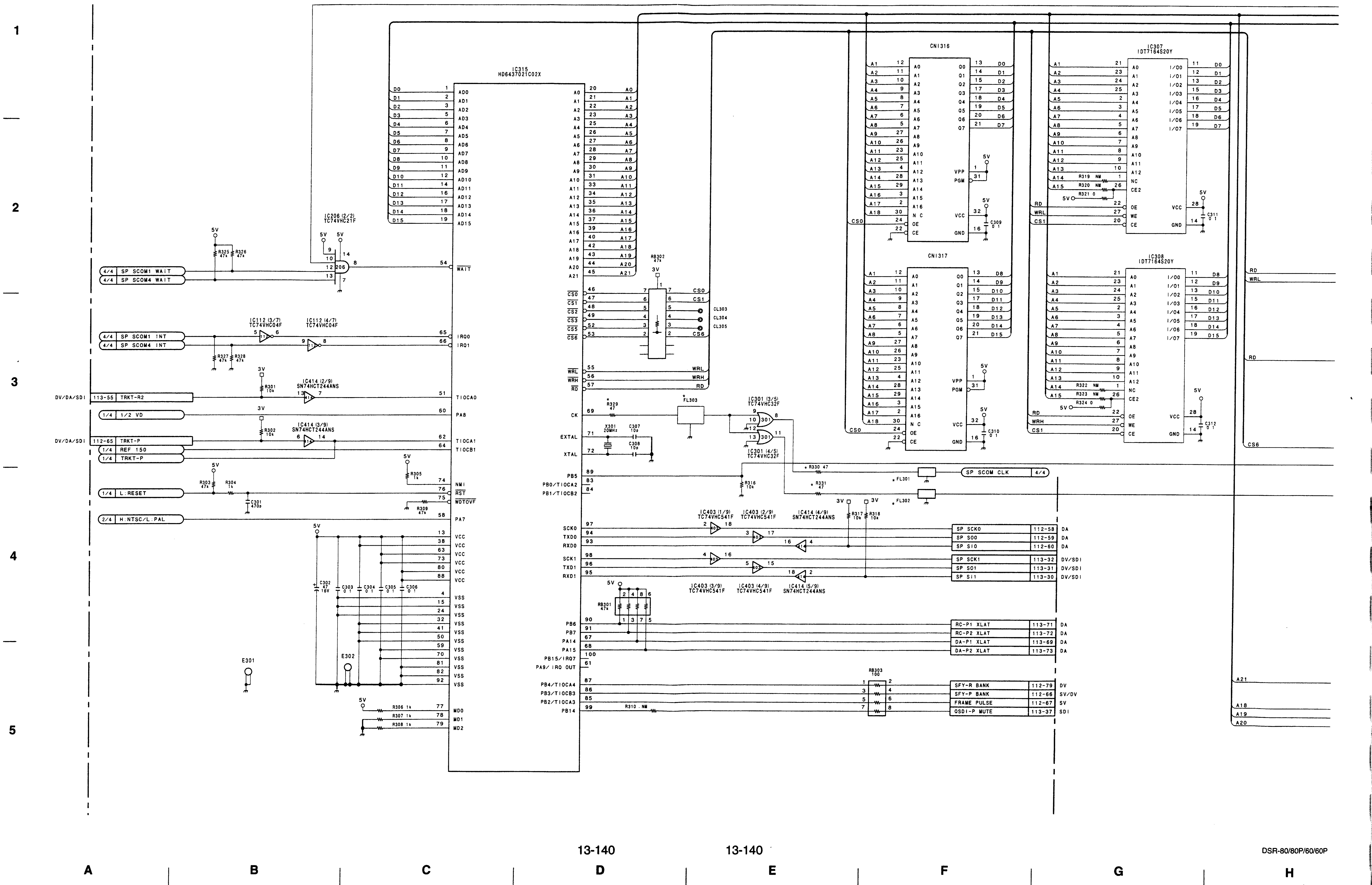

1

2

3

4

5

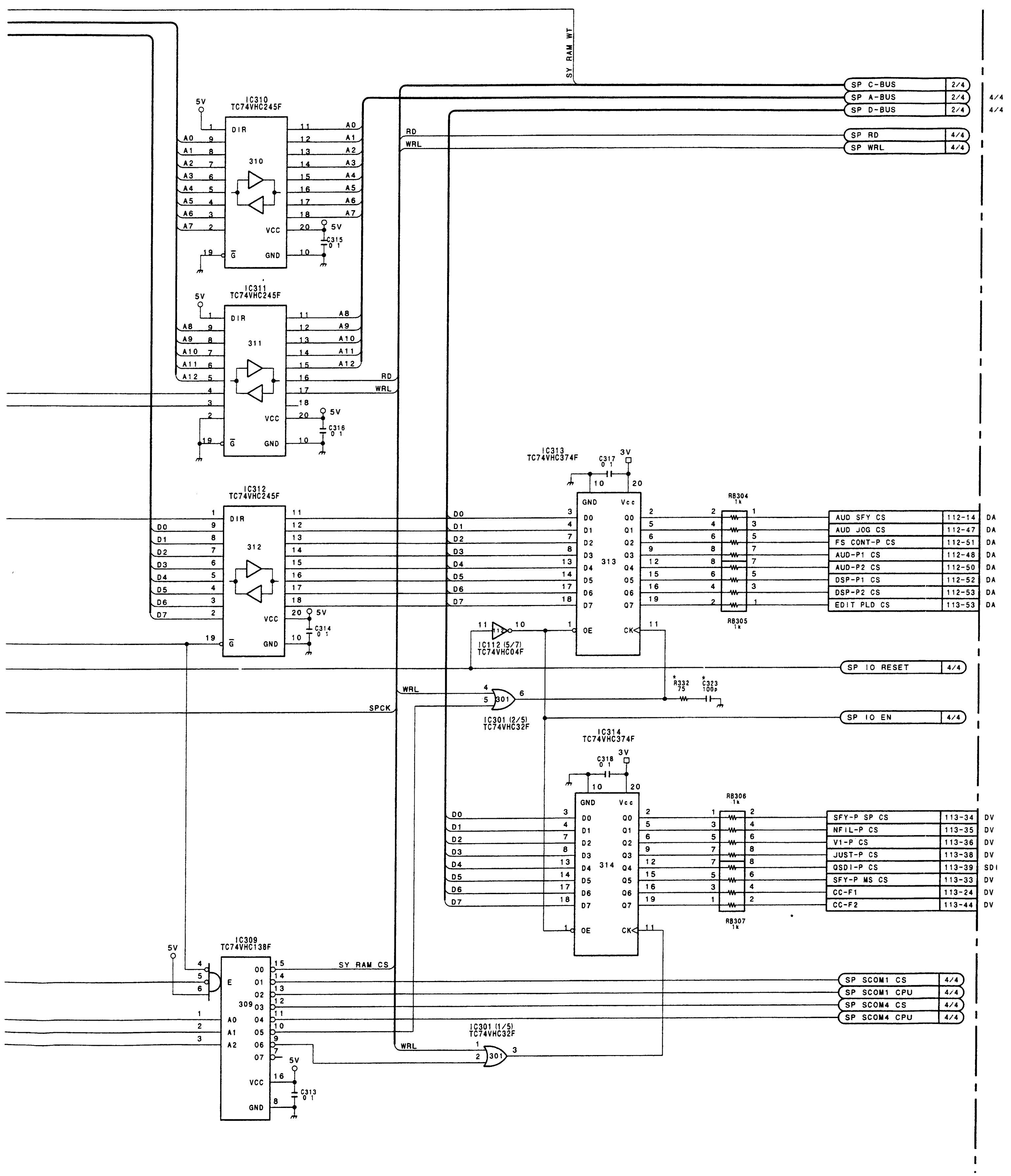

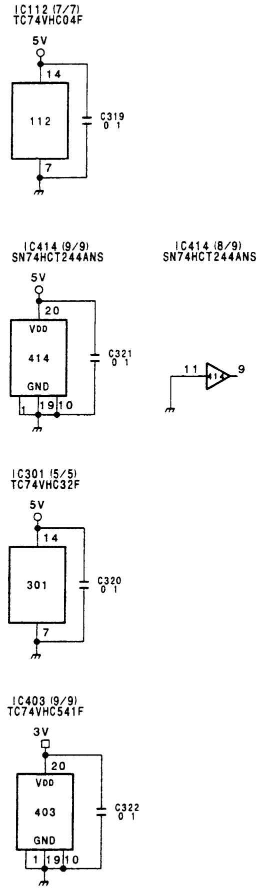

* SY-241 BOARD

REF NO.	CHANGED INFORMATION	LOT NO.
C323	ADDED	701-
FL301, 302	ADDED	
FL303	ADDED	
R329	100→47	
R330	DELETED	701
R330	ADDED	701-
R331	100→47	
R332	ADDED	

* SY-241B BOARD

REF NO.	CHANGED INFORMATION	LOT NO.
C323	ADDED	701-
FL302	ADDED	
FL303	ADDED	703-
R329	ADDED	610-702
R329	100→47	703-
R330, 331	ADDED	610-612
R330	DELETED	701-
R331	100→47	
R332	ADDED	

SY-241/241B (3/4)

BOARD SUFFIX : -11, 12, 13
MODEL DSR-80/80P/60/60P

SY-241/241B (4/4): SYSTEM CONTROL

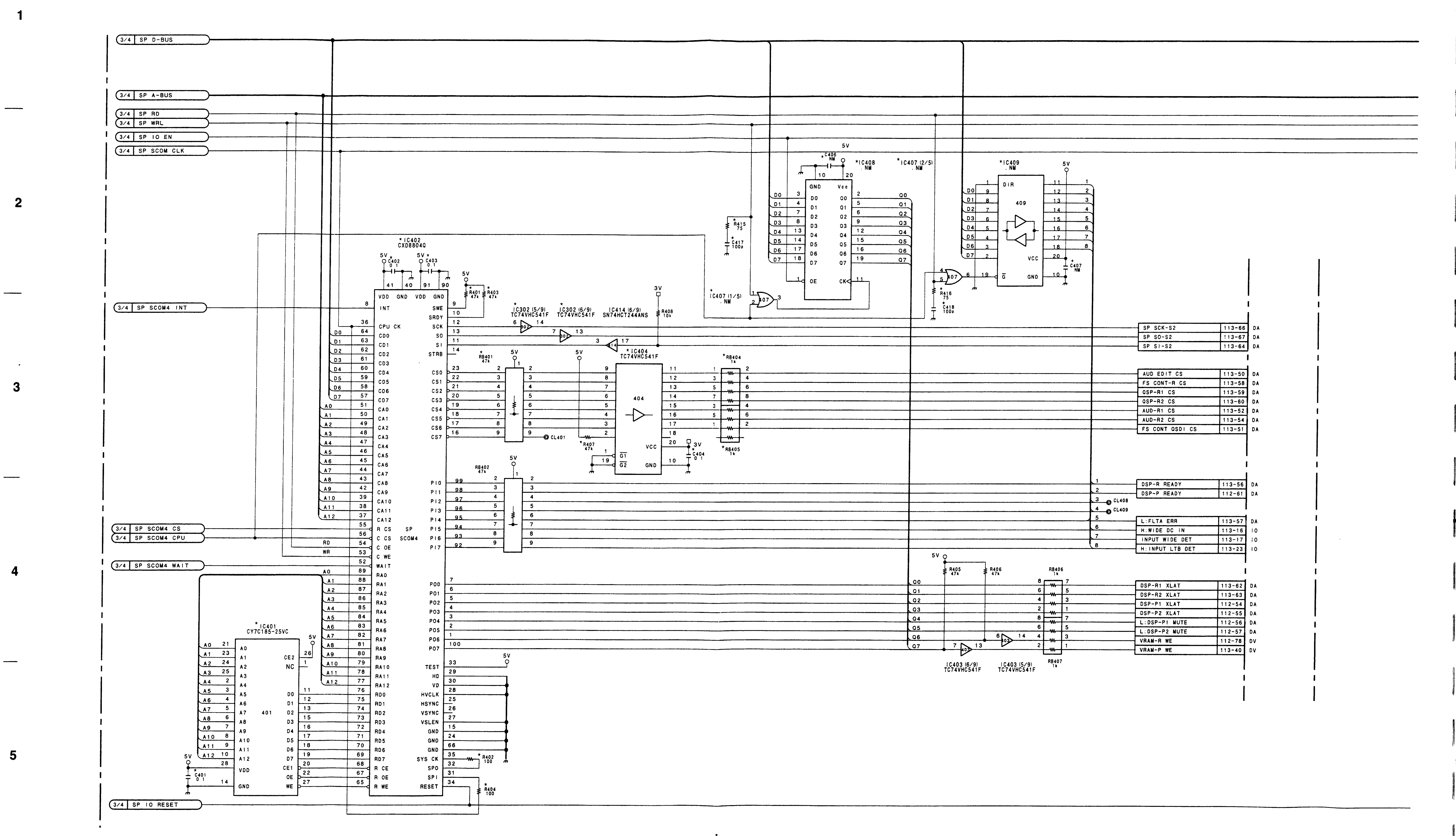

A B C D E F G H

SONY-SP0754 / DRUCK 450

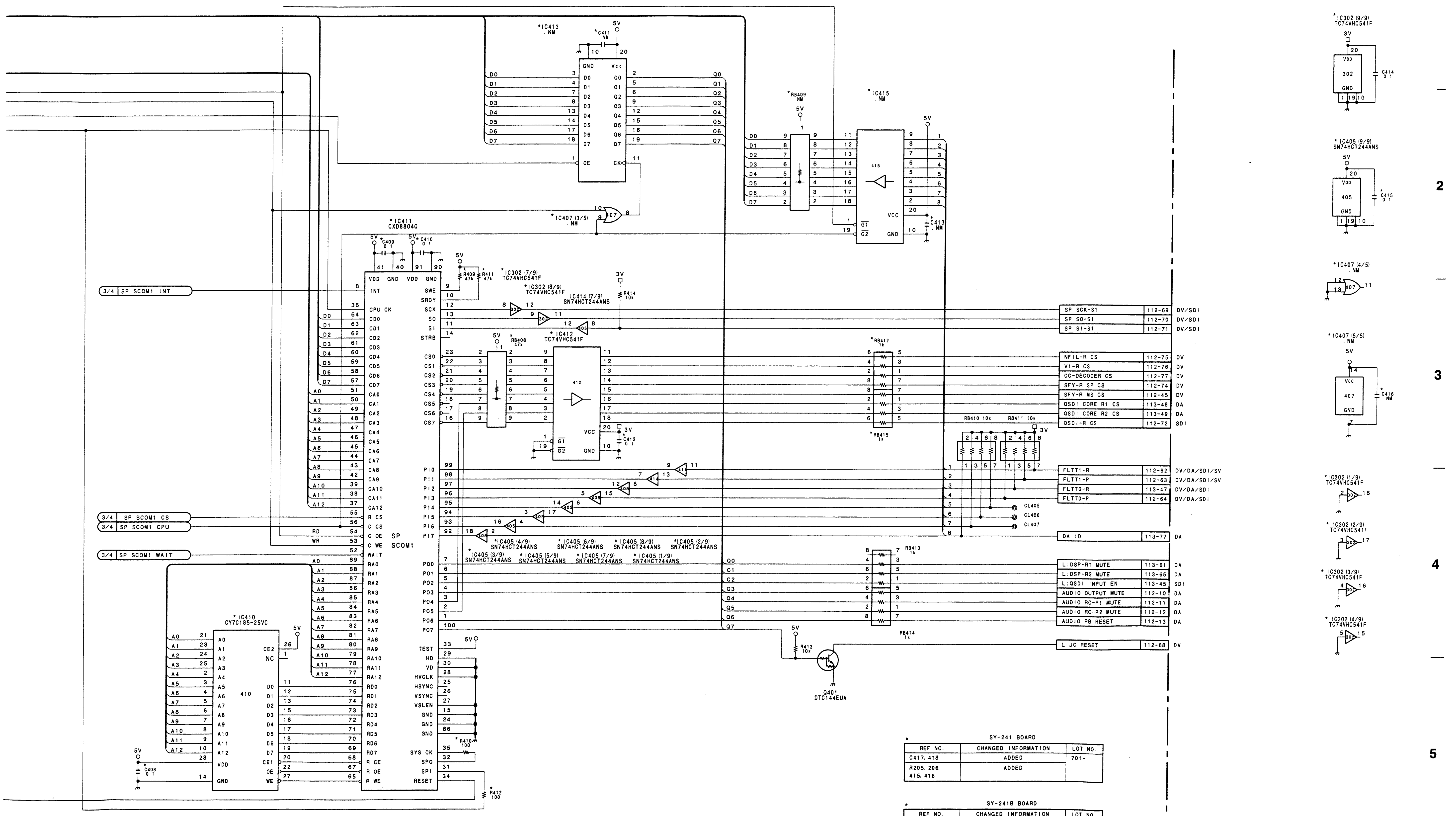

* SY-241 BOARD

REF NO.	CHANGED INFORMATION	LOT NO.
C417, 418	ADDED	701-
R205, 206, 415, 416	ADDED	

* SY-241B BOARD

REF NO.	CHANGED INFORMATION	LOT NO.
C417, 418	ADDED	701-
R415, 416	ADDED	
RB415	ADDED	610-

SY-241/241B (4/4)

BOARD SUFFIX : -11, 12, 13
MODEL DSR-80/80P/60/60P

TC-90: EXT TC INPUT/OUTPUT

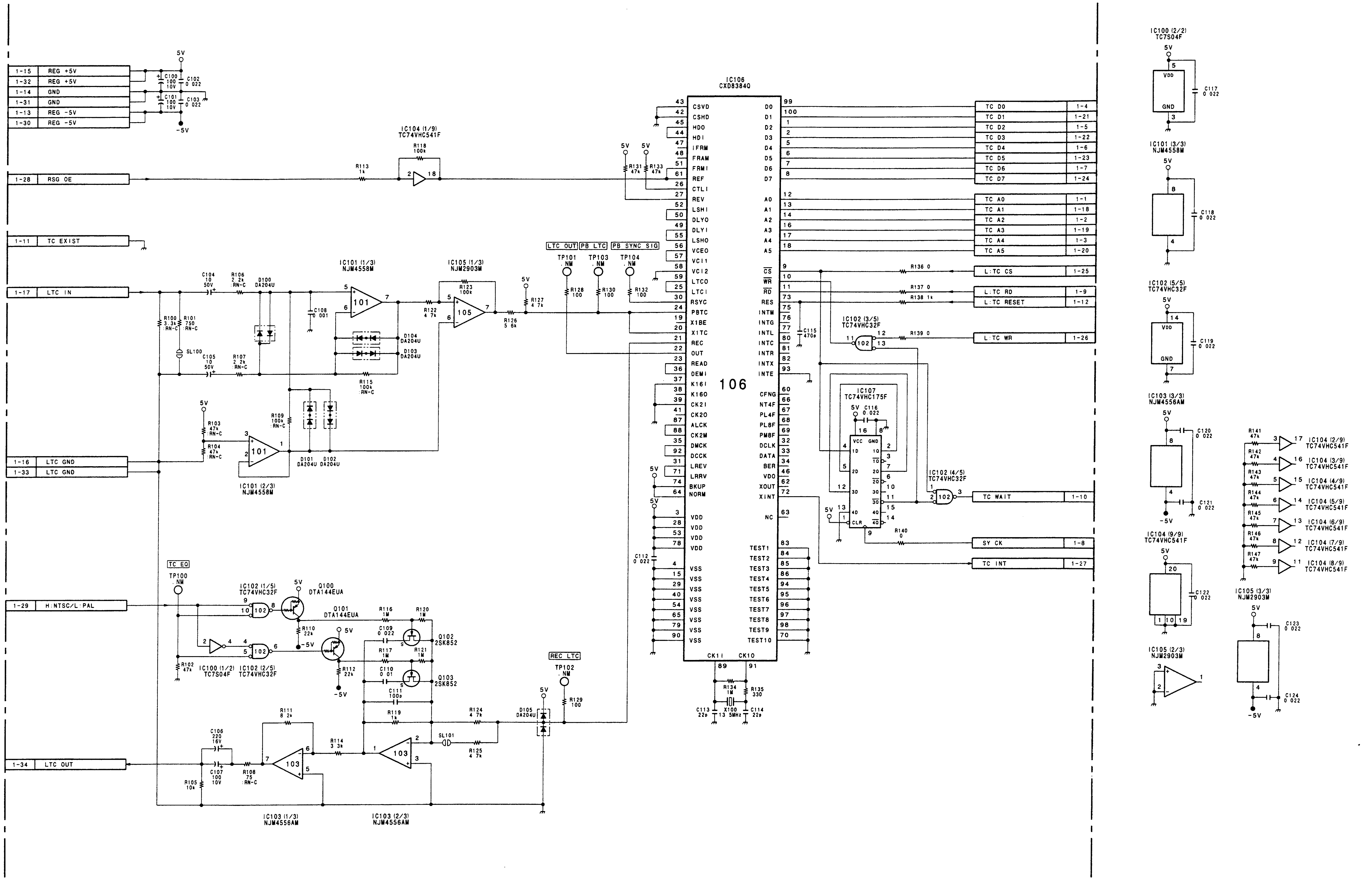

1
2
3
4
5

TC-90

MODEL DSBK-130/130P

MB-712 (1/6): MOTHER BOARD

DSR-80/80P

10-149

CN110

603-8	OUTPUT Y/G (G)	1	2	OUTPUT Y/G (X)	603-9
603-5. 110-5	OUTPUT R-Y/B-Y (G)	3	4	OUTPUT B-Y/B (X)	603-6
603-5. 110-3	OUTPUT R-Y/B-Y (G)	5	6	OUTPUT R-Y/R (X)	603-7
	GND	7	8	OUTPUT S-Y (X)	603-2
603-3	OUTPUT S (G)	9	10	OUTPUT S-C (X)	603-4
603-10. 110-13	OUTPUT VIDEO1/2 (G)	11	12	OUTPUT VIDEO1 (X)	603-12
603-10. 110-11	OUTPUT VIDEO1/2 (G)	13	14	OUTPUT VIDEO2 (X)	603-11
601-2	INPUT REF/RGB SYNC (G)	15	16	INPUT REF/RGB SYNC (X)	601-1
601-4	REF VIDEO OUTPUT (G)	17	18	REF VIDEO OUTPUT (X)	601-3
	N.C	19	20	N.C	
602-3	INPUT Y/G (G)	21	22	INPUT Y/G (X)	602-2
602-5	INPUT R-Y/R (G)	23	24	INPUT R-Y/R (X)	602-4
602-7	INPUT B-Y/B (G)	25	26	INPUT B-Y/B (X)	602-6
	GND	27	28	INPUT S-Y (X)	602-10
602-11	INPUT S (G)	29	30	INPUT S-C (X)	602-12
601-12	INPUT VIDEO (G)	31	32	INPUT VIDEO (X)	601-11
	GND	33	34	GND	
607-4	RM VIDEO LEVEL ADJ	35	36	RM SETUP LEVEL ADJ	607-5
607-6	RM CHROMA LEVEL ADJ	37	38	RM Y/C DELAY ADJ	607-13
607-2	RM HUE ADJ	39	40	RM SYNC PHASE ADJ	607-1
607-3	RM SC PHASE ADJ	41	42	N.C	
	N.C	43	44	H:INCAM//INT	107-24
	GND	45	46	DIGITAL SYNC (X)	107-26
	N.C	47	48	N.C	
107-28	H:INPUT SETUP REMOVE	49	50	H:INPUT EXIST	114-41
107-29	CAM SC	51	52	CAM H	107-20
	N.C	53	54	L:NON STD	114-79
	N.C	55	56	N.C	
	N.C	57	58	N.C	
	N.C	59	60	N.C	
	N.C	61	62	N.C	
	N.C	63	64	N.C	
	N.C	65	66	N.C	
	N.C	67	68	N.C	
	N.C	69	70	N.C	
	N.C	71	72	N.C	
	GND	73	74	ADY CLAMP PULSE	107-32
	GND	75	76	ADY VRB	107-31
	GND	77	78	GND	
107-35. 107-37	A/D Y SIGNAL (G)	79	80	A/D Y SIGNAL (X)	107-36
107-39. 107-41	A/D B-Y SIGNAL (G)	81	82	A/D B-Y SIGNAL (X)	107-40
107-43. 107-45	A/D R-Y SIGNAL (G)	83	84	A/D R-Y SIGNAL (X)	107-44
	UNREG -12V	85	86	UNREG -12V	
	UNREG -12V	87	88	UNREG -12V	
	UNREG -5V	89	90	UNREG -5V	
	UNREG -5V	91	92	UNREG -5V	
	UNREG +12V	93	94	UNREG +12V	
	UNREG +12V	95	96	UNREG +12V	
	GND	97	98	GND	
	GND	99	100	GND	

10-149

CN111

	N.C	1	2	PB SETUP ADD	109-10
	GND	3	4	SETUP POSITION	109-38
	GND	5	6	D/A MPX	109-36
	N.C	7	8	D/A Y DATA 0	109-11
	GND	9	10	D/A Y DATA 1	109-12
	N.C	11	12	D/A Y DATA 2	109-14
	GND	13	14	D/A Y DATA 3	109-15
	N.C	15	16	D/A Y DATA 4	109-16
	GND	17	18	D/A Y DATA 5	109-18
	N.C	19	20	D/A Y DATA 6	109-19
	GND	21	22	D/A Y DATA 7	109-20
	N.C	23	24	D/A Y DATA 8	109-22
	GND	25	26	D/A Y DATA 9	109-23
	GND	27	28	ACLK	109-24
	GND	29	30	D/A C DATA 0	109-26
	N.C	31	32	D/A C DATA 1	109-27
	GND	33	34	D/A C DATA 2	109-28
	N.C	35	36	D/A C DATA 3	109-30
	GND	37	38	D/A C DATA 4	109-31
	N.C	39	40	D/A C DATA 5	109-32
	GND	41	42	D/A C DATA 6	109-34
	N.C	43	44	D/A C DATA 7	109-35
	GND	45	46	GND	
	N.C	47	48	PB HCK (G)	109-42
106-39	PB CK27-2 (G)	49	50	PB HCK (X)	109-40
106-40	PB CK27-2 (X)	51	52	PB CK27 (X)	109-46
	N.C	53	54	PB CK27 (G)	109-45
	N.C	55	56	N.C	109-43
109-50. 113-13	RF OE	57	58	REF OE	109-47. 106-44
109-48	RFH	59	60	GND	
113-14	REF VD	61	62	REF HD	109-51. 106-47. 113-15
115-73	H:EXT SYNC MODE	63	64	H:WIDE DC	113-16
115-77	H:EXT BURST EXIST	65	66	INPUT WIDE DET	113-17
113-18	CHARACTER FRAME	67	68	CHARACTER SIG	113-19
	GND	69	70	L:TBC CPU CS	113-20
113-22	L:MAINTE MODE	71	72	INPUT LTB DET	113-23
702-22. 109-78. 106-70. 113-74	SY SCK1	73	74	SY SO1	702-20. 109-77. 106-71. 113-75
702-21. 109-80. 106-72. 113-76	SY SI1	75	76	REF CF PULSE	112-80. 115-17
115-13	H:STD/L:NON-STD	77	78	INPUT CF PULSE	115-21
	GND	79	80	N.C	
702-28	LOCAL SYNC PHASE ADJ	81	82	LOCAL SC PHASE ADJ	702-29
702-18. 109-84. 106-76. 113-80	L:CPU RESET	83	84	N.C	
	REG +3.15V	85	86	REG +3.15V	
	REG +3.15V	87	88	REG +3.15V	
	REG +5V	89	90	REG +5V	
	REG +5V	91	92	REG +5V	
	UNREG +6.8V	93	94	UNREG +6.8V	
	UNREG +6.8V	95	96	UNREG +6.8V	
	GND	97	98	GND	
	GND	99	100	GND	

DV-15

CN107

116-85	P-VAR FRP	1	2	R-VAR FRP	116-84
114-1	LVD	3	4	SDI CFP1	114-4
114-3	SDI CFP2	5	6	TRKT-P2	104-19. 101-32
114-5	SDI CFP0	7	8	TRKT-R	104-22. 114-8. 101-34
104-20. 101-31	FLTT1-P2	9	10	TRKT-P	112-65. 114-6. 116-47
104-23. 112-62. 114-9. 101-33	FLTT1-R	11	12	FLTA-R	104-24. 101-36
	GND	13	14	FLTT1-P	112-63. 114-7. 116-48
104-26	QSDI F	15	16	QSDI V	104-27
	N.C	17	18	QSDI H	104-28
104-30	QSDI SYNC	19	20	QSDI 13M (X)	104-32
104-31	QSDI 13M (G)	21	22	SPCK3-R	101-38
	N.C	23	24	H:INCAM/INT	110-44
	GND	25	26	DIGITAL SYNC (X)	110-46
	GND	27	28	H:INPUT SETUP REMOVE	110-49
110-51	CAM SC	29	30	CAM H	110-52
110-76	ADY VRB	31	32	ADY CLAMP PULSE	110-74
		33	34	N.C	
110-79. 107-37	A/D Y SIGNAL (G)	35	36	A/D Y SIGNAL (X)	110-80
110-74. 107-35	A/D Y SIGNAL (G)	37	38	N.C	
110-81. 107-41	A/D B-Y SIGNAL (G)	39	40	A/D B-Y SIGNAL (X)	110-82
110-81. 107-39	A/D B-Y SIGNAL (G)	41	42	N.C	
110-83. 107-45	A/D R-Y SIGNAL (G)	43	44	A/D R-Y SIGNAL (X)	110-84
110-83. 107-43	A/D R-Y SIGNAL (G)	45	46	N.C	
112-64	FLTT0-P	47	48	SFY-P TBC EN	115-57
112-66. 115-53	SFY-P BANK	49	50	L:JC RESET	112-68. 104-84
104-56. 112-69	SP SCK-S1	51	52	SP SO-S1	104-58. 112-70
104-59. 112-71	SP SI-S1	53	54	SFY-R MS CS	112-45
112-73	L:CTLG RESET	55	56	SFY-R SP CS	112-74
112-75	NFIL-R CS	57	58	V1-R CS	112-76
112-77	CC-DECODER CS	59	60	VRAM-R WE	112-78
	GND	61	62	SFY-R BANK	112-79
104-63. 101-63	D1 AD1	63	64	D1 AD0	104-62. 101-62
104-65. 101-65	D1 AD3	65	66	D1 AD2	104-64. 101-64
104-67. 101-67	D1 AD5	67	68	D1 AD4	104-66. 101-66
104-69. 101-69	D1 AD7	69	70	D1 AD6	104-68. 101-68
104-71. 101-71	D1 A8	71	72	D1 CS	104-70
104-73. 101-73	D1 ASTB	73	74	D1 A9	104-72. 101-72
104-75. 101-75	D1 WR	75	76	D1 RD	104-74. 101-74
	GND	77	78	SDIA REC DT1/2	102-1
102-2	SDIA REC DT3/4	79	80	SDIA REC LRCK	102-4
102-3	SDIA REC BCK	81	82	SDIA REC 256FS	102-6
102-8	SDIA REC ERR1	83	84	SDIA REC ERR2	102-7
	UNREG -12V	85	86	UNREG -12V	
	UNREG -12V	87	88	UNREG -12V	
	UNREG -5V	89	90	UNREG -5V	
	UNREG -5V	91	92	UNREG -5V	
	UNREG +12V	93	94	UNREG +12V	
	UNREG +12V	95	96	UNREG +12V	
	GND	97	98	GND	
	GND	99	100	GND	

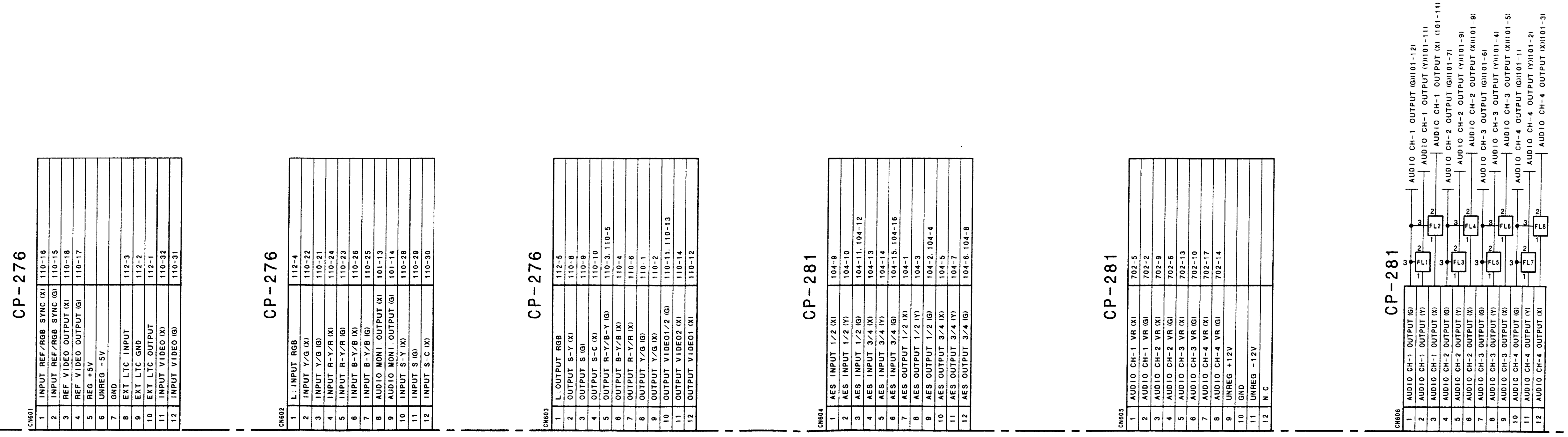

DSR-80/80P

1

DV-15

CN108

	N.C	1	2	N.C	
	N.C	3	4	N.C	
	N.C	5	6	N.C	
	N.C	7	8	N.C	
116-81. 114-76	REC SW REF	9	10	DTSC0	116-93
116-94	DTSC1	11	12	DTSC2	116-95
116-96	DTSC3	13	14	DTSC4	116-97
116-98	DTSC5	15	16	DTSC6	116-99
116-100	DTSC7	17	18	FRPSC-R	116-101
116-102	TRPSC-R	19	20	DRCKREF	116-103
116-104	13.5MHZ	21	22	VRCKCS-R	116-105
105-30	IENPV-R	23	24	IENPA-R	105-31
102-32	TRCK4-R	25	26	N.C	
105-32	TRCK3-R	27	28	L:10U	116-31. 801-16
102-34	AUEN-R	29	30	ADTO-R	102-35
102-36	SADT-R	31	32	N.C	
102-38	START-R	33	34	N.C	
105-51	BUPQS	35	36	QSDI XEN	105-50
	GND	37	38	QSDT0-R	105-52
105-54	QSDT1-R	39	40	QSDT2-R	105-55
105-56	QSDT3-R	41	42	QSDT4-R	105-58
105-59	QSDT5-R	43	44	QSDT6-R	105-60
105-61	GND	45	46	QSDT7-R	105-62
105-63	QSDT8-R	47	48	QSDT9-R	105-64
105-65	GND	49	50	QSDT10-R	105-66
105-67	QSDT11-R	51	52	QSDT12-R	105-68
105-70	QSDT13-R	53	54	QSDT14-R	105-71
105-72	QSDT15-R	55	56	GND	
105-73	GND	57	58	GND	
105-74	SFDT0	59	60	SFDT1	105-75
105-76	SFDT2	61	62	SFDT3	105-78
105-77	GND	63	64	SFDT4	105-79
105-80	SFDT5	65	66	SFDT6	105-82
105-83	SFDT7	67	68	SFDT8	105-84
105-86	SFDT9	69	70	SFDT10	105-87
105-89	GND	71	72	SFDT11	105-88
105-90	SFDT12	73	74	SFDT13	105-91
105-92	SFDT14	75	76	SFDT15	105-94
	GND	77	78	IENPV-P	105-95
105-96	IENPA-P	79	80	TRCK3-P	105-99
102-47	SADT-P	81	82	TRCK4-P	102-44
102-48	START-P	83	84	N.C	
116-109	TRPSC-P	85	86	FRPSC-P	116-108
116-106	VRCKCS-P	87	88	N.C	
116-110. 102-50	SYCS	89	90	SCDVCS	116-111
116-112. 102-51	VADVCS	91	92	VPCKCS	116-113. 102-52
116-115. 102-54	DTCS0	93	94	DTCS1	116-116. 102-55
116-117. 102-56	DTCS2	95	96	DTCS3	116-118. 102-58
116-119. 102-59	DTCS4	97	98	DTCS5	116-120. 102-60
116-121. 102-62	DTCS6	99	100	DTCS7	116-122. 102-63

DV-15

CN109

113-2	SY SI2	1	2	SY SO2	113-3
113-4	SY SCK2	3	4	CTLG-P MOD CS	113-6
113-7	CTLG-P SP CS	5	6	CTLG SUB-P CS	113-8
113-10	CTLG-R MOD CS	7	8	CTLG-R SP CS	113-11
	GND	9	10	PB SETUP ADD	111-2
111-8	D/A Y DATA 0	11	12	D/A Y DATA 1	111-10
	GND	13	14	D/A Y DATA 2	111-12
111-14	D/A Y DATA 3	15	16	D/A Y DATA 4	111-16
	GND	17	18	D/A Y DATA 5	111-18
111-20	D/A Y DATA 6	19	20	D/A Y DATA 7	111-22
	GND	21	22	D/A Y DATA 8	111-24
111-26	D/A Y DATA 9	23	24	ACLK	111-28
	GND	25	26	D/A C DATA 0	111-30
111-32	D/A C DATA 1	27	28	D/A C DATA 2	111-34
	GND	29	30	D/A C DATA 3	111-36
111-38	D/A C DATA 4	31	32	D/A C DATA 5	111-40
	GND	33	34	D/A C DATA 6	111-42
111-44	D/A C DATA 7	35	36	D/A MPX	111-6
	GND	37	38	SETUP POSITION	111-4
103-46	SPCK3-P	39	40	PB HCK (X)	111-50
	N.C	41	42	PB HCK (G)	111-48
	N.C	43	44	N.C	
111-54	PB CK27 (G)	45	46	PB CK27 (X)	111-52
106-44. 111-58	REF OE	47	48	RFH	111-59
	N.C	49	50	RF OE	111-57. 113-13
106-47. 111-62. 113-15	REF HD	51	52	N.C	
113-24	CC-F1	53	54	N.C	
113-28	L:SDI OUT OP CS	55	56	SP SI1	106-53. 113-30
106-54. 113-31	SP SO1	57	58	SP SCK1	106-55. 113-32
113-34	SFY-P SP CS	59	60	NFIL-P CS	113-35
103-36	V1-P CS	61	62	JUST-P CS	113-38
113-33	SFY-P MS CS	63	64	VRAM-P WE	113-40
	N.C	65	66	TRKT-R2	113-55
113-44	CC-F2	67	68	FLTT0-R	113-47
	N.C	69	70	SDI A DT1/2	105-1. 102-11
102-10. 105-2	SDI A DT3/4	71	72	SDI A BCK	105-4. 102-12
102-15. 105-5	SDI A LRCK	73	74	SDI A 128FS	105-6. 102-14
	N.C	75	76	L:QSDI OP CS	106-64. 113-46
702-20. 106-71. 111-74. 113-75	SY SO1	77	78	SY SCK1	702-22. 106-70. 111-73. 113-74
	N.C	79	80	SY SI1	702-21. 106-72. 111-75. 113-76
113-79	L:SDI OUT OP EXIST	81	82	L:SDI IN OP EXIST	113-78
106-77. 113-82	L:QSDI OP EXIST	83	84	L:CPU RESET	702-18. 106-76. 111-83. 113-80
	REG +3.15V	85	86	REG +3.15V	
	REG +3.15V	87	88	REG +3.15V	
	REG +5V	89	90	REG +5V	
	REG +5V	91	92	REG +5V	
	UNREG +6.8V	93	94	UNREG +6.8V	
	UNREG +6.8V	95	96	UNREG +6.8V	
	GND	97	98	GND	
	GND	99	100	GND	

2

3

4

MS-43

CN503

1	CAPSTAN DIR CONT	115-11
2	CAP BRAKE	115-14
3	CAPSTAN DRIVE	115-4
4	PINCH SOL. VCC	115-8
5	PINCH SOL. STARTER	115-12
6	PINCH SOL. HOLDER	115-16
7	UNTH END	115-15
8	TH END	115-18
9	CLEANING SOL. STARTER	115-20
10	CLEANING SOL. VCC	115-24
11	DEW DET (G)	115-19
12	DEW DET (X)	115-22
13	MECHA +12V	
14	MECHA +12V	
15	GND	
16	GND	
17	UNREG -5V	
18	UNREG +15V	
19	CLEANING SOL. HOLDER	115-29
20	N.C	
21	TH/UNTH END LED	115-26
22	POSISION LED	115-27
23	THREADING MOTOR (+)	115-28
24	THREADING MOTOR (-)	115-32
25	THREADING FG	115-30
26	DRUM DRIVE	115-36
27	DRUM FG	115-31
28	DRUM DIR CONT	115-34
29	DRUM CURRENT	115-35
30	DRUM PG	115-38
31	CAPSTAN FG A	115-39
32	CAPSTAN FG B	115-42
33	EEPROM-SV RESET	115-43
34	L:MS EXIST1	115-46
35	GND	
36	REG +5V	

CN505

1	CC DOWN3	115-23
2	CAS IN1	115-5
3	CAS IN2	115-6
4	COMP.EXIST	115-3
5	CC DOWN1	115-10
6	CC DOWN2	115-9
7	CAS IN3	115-7
8	REG +5V	
9	GND	
10	N.C	
11	N.C	
12	CC UP/DOWN MOTOR (-)	115-2
13	CC UP/DOWN MOTOR (+)	115-1

MS-43

CN506

1	TENSION SENSOR VEE	115-47
2	TENSION SENSOR (+)	115-50
3	TENSION SENSOR (-)	115-51
4	TENSION SENSOR VCC	115-54
5	END SENSOR (X)	115-55
6	SV SI1	115-58
7	SV SO1	115-59
8	SV SCK1	115-62
9	EEPROM-SV CS	115-63
10	EEPROM-SV BUSY	115-66
11	THERMO SENSOR	115-67
12	T REEL MOTOR (-)	115-40
13	T REEL MOTOR (+)	115-44
14	T BRAKE SOL. HOLDER	115-48
15	T BRAKE SOL. STARTER	115-52
16	T BRAKE SOL. VCC	115-56
17	T REEL FG B	115-70
18	T REEL FG A	115-71
19	S REEL MOTOR (+)	115-60
20	S REEL MOTOR (-)	115-64
21	S BRAKE SOL. HOLDER	115-68
22	S BRAKE SOL. STARTER	115-72
23	S BRAKE SOL. VCC	115-76
24	S REEL FG B	115-74
25	S REEL FG A	115-75
26	POSITION MOTOR (-)	115-80
27	POSITION MOTOR (+)	115-84
28	TOP SENSOR (X)	115-79
29	TOP/END LED VCC	115-78
30	H:S POSITION	115-82
31	H:L POSITION	115-83
32	MIC GND	702-24
33	MIC SCK	702-25
34	MIC SDA	702-26
35	MIC VCC	702-27
36	REC INH SW (X)	115-81

5

MB-712 (1/6)
BOARD SUFFIX : -13
MODEL DSR-80/80P

MB-712 (2/6): MOTHER BOARD

DSR-80/80P

SDI-26

CN104

604-7	AES OUTPUT 1/2 (X)	1	2	AES OUTPUT 1/2 (G)	104-4. 604-9
604-8	AES OUTPUT 1/2 (Y)	3	4	AES OUTPUT 1/2 (G)	104-2. 604-9
604-10	AES OUTPUT 3/4 (X)	5	6	AES OUTPUT 3/4 (G)	104-8. 604-12
604-11	AES OUTPUT 3/4 (Y)	7	8	AES OUTPUT 3/4 (G)	104-6. 604-12
604-1	AES INPUT 1/2 (X)	9	10	AES INPUT 1/2 (Y)	604-2
104-12. 604-3	AES INPUT 1/2 (G)	11	12	AES INPUT 1/2 (G)	104-11. 604-3
604-4	AES INPUT 3/4 (X)	13	14	AES INPUT 3/4 (Y)	604-5
104-15. 604-6	AES INPUT 3/4 (G)	15	16	AES INPUT 3/4 (G)	104-15. 604-6
	N.C	17	18	N.C	
101-32. 107-6	TRKT-P2	19	20	FLTT1-P2	101-31. 107-9
	N.C	21	22	TRKT-R	107-8. 114-8. 101-34
107-11. 112-62. 114-9. 101-33	FLTT1-R	23	24	FLTA-R	107-12. 101-36
	N.C	25	26	QSDI F	107-15
107-16	QSDI V	27	28	QSDI H	107-18
	GND	29	30	QSDI SYNC	107-19
107-21	QSDI 13M (G)	31	32	QSDI 13M (X)	107-20
	N.C	33	34	N.C	
	N.C	35	36	N.C	
	N.C	37	38	N.C	
	GND	39	40	N.C	
112-10. 101-41	AUDIO OUTPUT MUTE	41	42	N.C	
	N.C	43	44	N.C	
	N.C	45	46	N.C	
	N.C	47	48	N.C	
	N.C	49	50	N.C	
	N.C	51	52	N.C	
	N.C	53	54	N.C	
	N.C	55	56	SP SCK-S1	107-51. 112-69
	GND	57	58	SP SO-S1	107-52. 112-70
107-53. 112-71	SP SI-S1	59	60	QSDI-R CS	112-72
101-70	AES CS	61	62	D1 AD0	107-64. 101-62
107-63. 101-63	D1 AD1	63	64	D1 AD2	107-66. 101-64
107-65. 101-65	D1 AD3	65	66	D1 AD4	107-68. 101-66
107-67. 101-67	D1 AD5	67	68	D1 AD6	107-70. 101-68
107-69. 101-69	D1 AD7	69	70	D1 CS	107-72
107-71. 101-71	D1 A8	71	72	D1 A9	107-74. 101-72
107-73. 101-73	D1 ASTB	73	74	D1 RD	107-76. 107-74
107-75. 101-75	D1 WR	75	76	D1 C STS CHG	101-76
	N.C	77	78	N.C	
	N.C	79	80	N.C	
	N.C	81	82	N.C	
	N.C	83	84	L:JC RESET	112-68. 107-50
	UNREG -12V	85	86	UNREG -12V	
	UNREG -12V	87	88	UNREG -12V	
	UNREG -5V	89	90	UNREG -5V	
	UNREG -5V	91	92	UNREG -5V	
	UNREG +12V	93	94	UNREG +12V	
	UNREG +12V	95	96	UNREG +12V	
	GND	97	98	GND	
	GND	99	100	GND	

SDI-26

CN105

109-70. 102-11	SDI A DT1/2	1	2	SDI A DT3/4	109-71. 102-10
	N.C	3	4	SDI A BCK	109-72. 102-12
109-73. 102-15	SDI A LRCK	5	6	SDI A 128FS	107-74. 102-14
	N.C	7	8	AES IN DT1/2	102-16
102-19	AES IN BCK1/2	9	10	AES IN LRCK1/2	102-18
	N.C	11	12	AES IN ERR1/2	102-20
102-23	AES IN 256FS1/2	13	14	AES IN DT3/4	102-22
	N.C	15	16	AES IN LRCK3/4	102-24
102-27	AES IN BCK3/4	17	18	AES IN ERR3/4	102-26
	N.C	19	20	AES IN 256FS3/4	105-21. 102-28
105-20. 102-28	AES IN 256FS3/4	21	22	N.C	
	N.C	23	24	N.C	
	N.C	25	26	N.C	
	N.C	27	28	N.C	
	GND	29	30	IENPV-R	108-23
108-24	IENPA-R	31	32	TRCK3-R	108-27
	N.C	33	34	N.C	
	N.C	35	36	N.C	
	N.C	37	38	N.C	
	N.C	39	40	N.C	
	N.C	41	42	N.C	
	N.C	43	44	N.C	
	N.C	45	46	N.C	
	N.C	47	48	N.C	
	N.C	49	50	QSDI XEN	108-36
108-35	BUPQS	51	52	QSDT0-R	108-38
	GND	53	54	QSDT1-R	108-39
108-40	QSDT2-R	55	56	QSDT3-R	108-41
	GND	57	58	QSDT4-R	108-42
108-43	QSDT5-R	59	60	QSDT6-R	108-44
	GND	61	62	QSDT7-R	108-46
108-47	QSDT8-R	63	64	QSDT9-R	108-48
	GND	65	66	QSDT10-R	108-50
108-51	QSDT11-R	67	68	QSDT12-R	108-52
	GND	69	70	QSDT13-R	108-53
108-54	QSDT14-R	71	72	QSDT15-R	108-55
	GND	73	74	SFDT0	108-59
108-60	SFDT1	75	76	SFDT2	108-61
	GND	77	78	SFDT3	108-62
108-64	SFDT4	79	80	SFDT5	108-65
	GND	81	82	SFDT6	108-66
108-67	SFDT7	83	84	SFDT8	108-68
	GND	85	86	SFDT9	108-69
108-70	SFDT10	87	88	SFDT11	108-72
	GND	89	90	SFDT12	108-73
108-74	SFDT13	91	92	SFDT14	108-75
	GND	93	94	SFDT15	108-76
108-78	IENPV-P	95	96	IENPA-P	108-79
	GND	97	98	N.C	
108-80	TRCK3-P	99	100	GND	

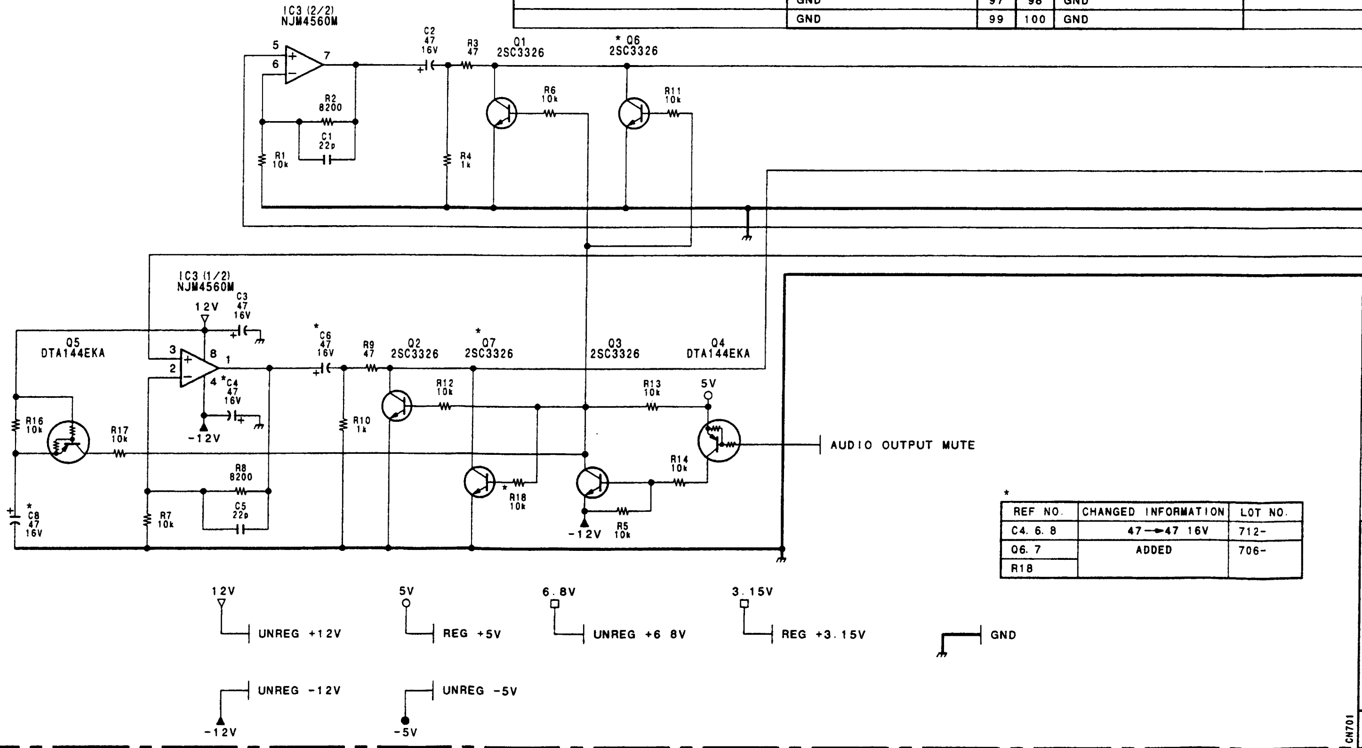

REF NO.	CHANGED INFORMATION	LOT NO.
C4, 6, 8	47→47 16V	712-
Q6, 7	ADDED	706-
R18		

CN701

1	HEADPHONE CH-1 OUT (X)	
2	HEADPHONE CH-1 OUT (G)	
3	HEADPHONE CH-2 OUT (X)	
4	HEADPHONE CH-2 OUT (G)	
5	HEADPHONE CH-1 RET VR (X)	
6		701-8. 701-10. 701-12. 103-41
7		103-40
8		701-6. 701-10. 701-12. 103-41
9		103-42
10		701-6. 701-8. 701-12. 103-41
11	HEADPHONE CH-2 RET VR (X)	
12		701-6. 701-8. 701-10. 103-41

KY-336

CN702

1	N.C	
2	AUDIO CH-1 VR (G)	605-2
3	AUDIO CH-1 VR RET (X)	103-55
4	AUDIO CH-1 VR RET (Y)	103-56
5	AUDIO CH-1 VR (X)	605-1
6	AUDIO CH-2 VR (G)	605-4
7	AUDIO CH-2 VR RET (X)	103-62
8	AUDIO CH-2 VR RET (Y)	103-63
9	AUDIO CH-2 VR (X)	605-3
10	AUDIO CH-3 VR (G)	605-6
11	AUDIO CH-3 VR RET (X)	103-71
12	AUDIO CH-3 VR RET (Y)	103-72
13	AUDIO CH-3 VR (X)	605-5
14	AUDIO CH-4 VR (G)	605-8
15	AUDIO CH-4 VR RET (X)	103-78
16	AUDIO CH-4 VR RET (Y)	103-79
17	AUDIO CH-4 VR (X)	605-7
18	L:CPU RESET	109-84. 106-76. 111-83. 113-80
19	L:KY CS	113-26
20	SY SO1	109-77. 106-71. 111-74. 113-75
21	SY SI1	109-80. 106-72. 111-75. 113-76
22	SY SCK1	109-78. 106-70. 111-73. 113-74
23	N.C	
24	MIC GND	506-32
25	MIC SCK	506-33
26	MIC SDA	506-34
27	MIC VCC	506-35
28	LOCAL SYNC PHASE ADJ	111-81
29	LOCAL SC PHASE ADJ	111-82
30	REG +5V	
31	REG +5V	
32	UNREG +12V	
33	UNREG +12V	
34	GND	
35	GND	
36	UNREG -12V	

A B C D E F G H

1 2 3 4 5

SONY-SP0754 / DRUCK 456

SDI-26

CN106

	N.C	1	2	N.C	
	N.C	3	4	GND	
	GND	5	6	N.C	
	N.C	7	8	QSDA DATA	103-4
	GND	9	10	QSDA START	103-6
103-7	QSDA FRAME	11	12	N.C	
	GND	13	14	N.C	
	N.C	15	16	N.C	
	GND	17	18	N.C	
	N.C	19	20	N.C	
	GND	21	22	N.C	
	N.C	23	24	N.C	
	GND	25	26	N.C	
	N.C	27	28	GND	
	GND	29	30	N.C	
	N.C	31	32	N.C	
	N.C	33	34	N.C	
	N.C	35	36	QSDI-P MUTE	113-37
	N.C	37	38	N.C	
111-49	PB CK27-2 (G)	39	40	PB CK27-2 (X)	111-51
	N.C	41	42	N.C	
	N.C	43	44	REF OE	109-47. 111-58
	N.C	45	46	N.C	
109-51. 111-62. 113-15	REF HD	47	48	GND	
	N.C	49	50	N.C	
	N.C	51	52	GND	
109-56. 113-30	SP SI1	53	54	SP SO1	109-57. 113-31
109-58. 113-32	SP SCK1	55	56	N.C	
	N.C	57	58	N.C	
113-39	QSDI-P CS	59	60	N.C	
	N.C	61	62	N.C	
113-45	L:QSDI INPUT EN	63	64	L:QSDI OP CS	109-76. 113-46
	N.C	65	66	N.C	
	N.C	67	68	N.C	
	N.C	69	70	SY SCK1	702-22. 109-78. 111-73. 111-74
702-20. 109-77. 111-74. 113-75	SY SO1	71	72	SY SI1	702-21. 109-80. 111-75. 113-76
	N.C	73	74	N.C	
	N.C	75	76	L:CPU RESET	702-18. 109-84. 111-83. 113-80
109-83. 113-82	L:QSDI OP EXIST	77	78	N.C	
	N.C	79	80	N.C	
	N.C	81	82	N.C	
	N.C	83	84	N.C	
	REG +3.15V	85	86	REG +3.15V	
	REG +3.15V	87	88	REG +3.15V	
	REG +5V	89	90	REG +5V	
	REG +5V	91	92	REG +5V	
	UNREG +6.8V	93	94	UNREG +6.8V	
	UNREG +6.8V	95	96	UNREG +6.8V	
	GND	97	98	GND	
	GND	99	100	GND	

C7 NM R15 NM

SY-241

CN112

601-10	EXT LTC OUTPUT	1	2	EXT LTC GND	601-9
601-8	EXT LTC INPUT	3	4	L:INPUT RGB	602-1
603-1	L:OUTPUT RGB	5	6	RM TX (+)	608-7
608-2	RM TX (-)	7	8	RM RX (+)	608-3
608-8	RM RX (-)	9	10	AUDIO OUTPUT MUTE	101-41. 104-41
101-42	AUDIO RC-P1 MUTE	11	12	AUDIO RC-P2 MUTE	101-43
101-44	AUDIO PB RESET	13	14	AUD SFY CS	101-45
114-11	SV D15	15	16	SV D14	114-12
114-15	1/2 VD	17	18	SV D13	114-13
114-14	SV D12	19	20	SV D11	114-16
114-19	REF 150	21	22	SV D10	114-17
114-18	SV D9	23	24	SV D8	114-20
114-23	H:NTSC/L:PAL	25	26	SV A10	114-21
114-22	SV A9	27	28	SV A8	114-24
114-25	SV A7	29	30	SV A6	114-26
114-27	SV A5	31	32	SV A4	114-28
114-77	H:RECORDER	33	34	SV A3	114-30
114-31	SV A2	35	36	SV A1	114-32
	GND	37	38	SV HWR	114-35
114-34	SV A0	39	40	SV RD	114-36
114-37	SV CLOCK (G)	41	42	SY RAM WAIT	114-38
114-39	SY RAM CS	43	44	SV CLOCK (X)	114-40
107-54	SFY-R MS CS	45	46	L:CPU RESET2	114-42
101-46	AUD JOG CS	47	48	AUD-P1 CS	101-47
	N.C	49	50	AUD-P2 CS	101-48
101-49	FS CONT-P CS	51	52	DSP-P1 CS	101-50
101-51	DSP-P2 CS	53	54	DSP-P1 XLAT	101-52
101-53	DSP-P2 XLAT	55	56	L:DSP-P1 MUTE	101-54
101-55	L:DSP-P2 MUTE	57	58	SP SCKO	101-56
101-57	SP SO0	59	60	SP SI0	101-58
101-59	DSP-P READY	61	62	FLTT1-R	107-11. 104-23. 114-9. 101-33
114-7. 107-14. 116-48	FLTT1-P	63	64	FLTT0-P	107-47
114-6. 107-10. 116-47	TRKT-P	65	66	SFY-P BANK	107-49. 115-53
115-61	FRAME PULSE	67	68	L:JC RESET	107-50. 104-84
107-51. 104-56	SP SCK-S1	69	70	SP SO-S1	107-52. 104-58
107-53. 104-59	SP SI-S1	71	72	QSDI-R CS	104-60
107-55	L:CTLG RESET	73	74	SFY-R SP CS	107-56
107-57	NFIL-R CS	75	76	V1-R CS	107-58
107-59	CC-DECODER CS	77	78	VRAM-R WE	107-60
107-62	SFY-R BANK	79	80	REF CF PULSE	111-76. 115-17
	UNREG +15V	81	82	UNREG +15V	
	UNREG +15V	83	84	UNREG +15V	
	UNREG -12V	85	86	UNREG -12V	
	UNREG -12V	87	88	UNREG -12V	
	UNREG -5V	89	90	UNREG -5V	
	UNREG -5V	91	92	UNREG -5V	
	UNREG +12V	93	94	UNREG +12V	
	UNREG +12V	95	96	UNREG +12V	
	GND	97	98	GND	
	GND	99	100	GND	

CN607

Pin	Signal	Ref
1	RM SYNC PHASE ADJ	110-40
2	RM HUE ADJ	110-39
3	RM SC PHASE ADJ	110-41
4	RM VIDEO LEVEL ADJ	110-35
5	RM SETUP LEVEL ADJ	110-36
6	RM CHROMA LEVEL ADJ	110-37
7	REMOTE REG -9V	
8	GND	
9	GND	
10	N.C	
11	N.C	
12	N.C	
13	RM Y/C DELAY ADJ	110-38
14	N.C	
15	REMOTE REG +9V	

CN608

Pin	Signal	Ref
1	GND	
2	RM TX (-)	112-7
3	RM RX (+)	112-8
4	GND	
5	N.C	
6	GND	
7	RM TX (+)	112-6
8	RM RX (-)	112-9
9	GND	

CN609

Pin	Signal	Ref
1	UNREG +12V	
2	FAN MOTOR STOP	114-29
3	GND	

CN703

Pin	Signal
1	REG +3.15V
2	REG +5V
3	UNREG +6.8V
4	UNREG +12V
5	UNREG -12V
6	UNREG +15V
7	UNREG -15V
8	UNREG -5V
9	GND
10	GND

CN903

Pin	Signal
1	REG +5V
2	REG +5V
3	REG +3.15V
4	REG +3.15V
5	UNREG -5V
6	GND
7	GND
8	GND

CN904

Pin	Signal
1	UNREG +12V
2	UNREG -12V
3	UNREG +6.8V
4	GND
5	UNREG +15V
6	UNREG -15V

CN607 TBC REMOTE

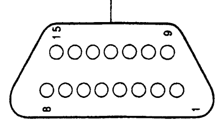

CN608 REMOTE 1 (9P)

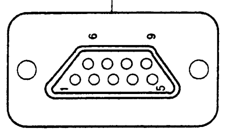

MB-712 (2/6)

BOARD SUFFIX : -13
MODEL DSR-80/80P

MB-712 (3/6): MOTHER BOARD

DSR-80/80P

SY-241

	CN113				
	N.C	1	2	SY SI2	109-1
109-2	SY SO2	3	4	SY SCK2	109-3
	N.C	5	6	CTLG-P MOD CS	109-4
109-5	CTLG-P SP CS	7	8	CTLG SUB-P CS	109-6
	N.C	9	10	CTLG-R MOD CS	109-7
109-8	CTLG-R SP CS	11	12	N.C	
109-50, 111-57	RF OE	13	14	REF VD	111-61
109-51, 106-47, 111-62	REF HD	15	16	H:WIDE DC	111-64
111-66	INPUT WIDE DET	17	18	CHARACTER FRAME	111-67
111-68	CHARACTER SIG	19	20	L:TBC CPU CS	111-70
	N.C	21	22	L:MAINTE MODE	111-71
111-72	INPUT LTB DET	23	24	CC-F1	109-53
	N.C	25	26	L:KY CS	702-19
	N.C	27	28	L:SDI OUT OP CS	109-55
	N.C	29	30	SP SI1	109-56, 106-53
109-57, 106-54	SP SO1	31	32	SP SCK1	109-58, 106-55
109-63	SFY-P MS CS	33	34	SFY-P SP CS	109-59
109-60	NFIL-P CS	35	36	V1-P CS	109-61
106-36	QSDI-P MUTE	37	38	JUST-P CS	109-62
106-59	QSDI-P CS	39	40	VRAM-P WE	109-64
	N.C	41	42	N.C	
	N.C	43	44	CC-F2	109-67
106-63	L:QSDI INPUT EN	45	46	L:QSDI OP CS	109-76, 106-64
109-68	FLTT0-R	47	48	QSDI CORE R1 CS	103-13
103-12	QSDI CORE R2 CS	49	50	AUD EDIT CS	103-14
103-15	FS CONT QSDI CS	51	52	AUD-R1 CS	103-16
103-19	EDIT PLD CS	53	54	AUD-R2 CS	103-18
109-66	TRKT-R2	55	56	DSP-R READY	103-20
103-17	L:FLTA ERR	57	58	FS CONT-R CS	103-22
103-23	DSP-R1 CS	59	60	DSP-R2 CS	103-24
103-25	L:DSP-R1 MUTE	61	62	DSP-R1 XLAT	103-26
103-27	DSP-R2 XLAT	63	64	SP SI-S2	103-28
103-29	L:DSP-R2 MUTE	65	66	SP SCK-S2	103-30
103-31	SP SO-S2	67	68	N.C	
103-33	DA-P1 XLAT	69	70	N.C	
103-35	RC-P1 XLAT	71	72	RC-P2 XLAT	103-36
103-37	DA-P2 XLAT	73	74	SY SCK1	702-22, 109-78, 106-70, 111-73
702-20, 109-77, 106-71, 111-74	SY SO1	75	76	SY SI1	702-21, 109-80, 106-72, 111-75
103-38	DA ID	77	78	L:SDI IN OP EXIST	109-82
109-81	L:SDI OUT OP EXIST	79	80	L:CPU RESET	702-18, 109-84, 106-76, 111-83
	N.C	81	82	L:QSDI OP EXIST	109-83, 106-77
	N.C	83	84	GND	
	REG +3.15V	85	86	REG +3.15V	
	REG +3.15V	87	88	REG +3.15V	
	REG +5V	89	90	REG +5V	
	REG +5V	91	92	REG +5V	
	UNREG +6.8V	93	94	UNREG +6.8V	
	UNREG +6.8V	95	96	UNREG +6.8V	
	GND	97	98	GND	
	GND	99	100	GND	

SV-184

	CN114				
107-3	LVD	1	2	N.C	
107-5	SDI CFP2	3	4	SDI CFP1	107-4
107-7	SDI CFP0	5	6	TRKT-P	112-65, 107-10, 116-47
112-63, 107-14, 116-48	FLTT1-P	7	8	TRKT-R	107-8, 104-22, 101-34
107-11, 104-23, 112-62, 101-33	FLTT1-R	9	10	N.C	
112-15	SV D15	11	12	SV D14	112-16
112-18	SV D13	13	14	SV D12	112-19
112-17	1/2 VD	15	16	SV D11	112-20
112-22	SV D10	17	18	SV D9	112-23
112-21	REF 150	19	20	SV D8	112-24
112-26	SV A10	21	22	SV A9	112-27
112-25	H:NTSC/L:PAL	23	24	SV A8	112-28
112-29	SV A7	25	26	SV A6	112-30
112-31	SV A5	27	28	SV A4	112-32
609-2	FAN MOTOR STOP	29	30	SV A3	112-34
112-35	SV A2	31	32	SV A1	112-36
	GND	33	34	SV A0	112-39
112-38	SV HWR	35	36	SV RD	112-40
112-41	SV CLOCK (G)	37	38	SY RAM WAIT	112-42
112-43	SY RAM CS	39	40	SV CLOCK (X)	112-44
110-50	H:INPUT EXIST	41	42	L:CPU RESET2	112-46
116-49	OCH ATF GAIN CONT.	43	44	OCH ATF RF CUT	116-50
116-51	L:TEST	45	46	OCH ATF ERROR (X)	116-52
116-53	OCH ATF ERROR (G)	47	48	ECH ATF GAIN CONT.	116-54
116-55	ATF SEL	49	50	ECH ATF RF CUT	116-56
116-57	ECH ATF ERROR (X)	51	52	ECH ATF ERROR (G)	116-58
116-59	L:ITI CENTER	53	54	EEPROM RP BUSY	116-60
116-61	EEPROM RP CS	55	56	EEPROM RP RESET	116-62
116-63	RP D/A LD1	57	58	RP D/A LD2	116-64
116-65	RP D/A LD3	59	60	N.C	
116-67	SV SI2	61	62	SV SO2	116-68
116-69	SV SCK2	63	64	N.C	
116-70	SV SI3	65	66	SV SO3	116-71
116-72	SV SCK3	67	68	CHCD-P1 CS	116-73
116-74	CHCD-P2 CS	69	70	CHCD-R1 CS	116-75
116-76	CHCD-R2 CS	71	72	L:CHCD RESET	116-77
116-78	PB SW REF	73	74	SUBCODE AREA	116-79
116-80	SSA 30R	75	76	REC SW REF	116-81, 108-9
112-33	H:RECORDER	77	78	FIFO-R CS	116-82
110-54	L:NON STD	79	80	ATF SW	116-83
	UNREG +6.8V	81	82	UNREG +6.8V	
	UNREG +6.8V	83	84	UNREG +6.8V	
	UNREG -12V	85	86	UNREG -12V	
	UNREG -12V	87	88	UNREG -12V	
	UNREG -5V	89	90	UNREG -5V	
	UNREG -5V	91	92	UNREG -5V	
	UNREG +12V	93	94	UNREG +12V	
	UNREG +12V	95	96	UNREG +12V	
	GND	97	98	GND	
	GND	99	100	GND	

SV-184

	CN115				
505-13	CC UP/DOWN MOTOR (+)	1	2	CC UP/DOWN MOTOR (-)	505-12
505-4	COMP EXIST	3	4	CAPSTAN DRIVE	503-3
505-2	CAS IN1	5	6	CAS IN2	505-3
505-7	CAS IN3	7	8	PINCH SOL.VCC	503-4
505-6	CC DOWN2	9	10	CC DOWN1	505-5
503-1	CAPSTAN DIR CONT.	11	12	PINCH SOL.STARTER	503-5
111-77	H:STD/L:NON-STD	13	14	CAP BRAKE	503-2
503-7	UNTH END	15	16	PINCH SOL.HOLDER	503-6
112-80, 111-76	REF CF PULSE	17	18	TH END	503-8
503-11	DEW DET (G)	19	20	CLEANING SOL.STARTER	503-9
111-78	INPUT CF PULSE	21	22	DEW DET (X)	503-12
505-1	CC DOWN3	23	24	CLEANING SOL.VCC	503-10
103-39	JOG SPEED	25	26	TH/UNTH END LED	503-21
503-22	POSISION LED	27	28	THREADING MOTOR (+)	503-23
503-19	CLEANING SOL HOLDER	29	30	THREADING FG	503-25
503-27	DRUM FG	31	32	THREADING MOTOR (-)	503-24
	N.C	33	34	DRUM DIR CONT.	503-28
503-29	DRUM CURRENT	35	36	DRUM DRIVE	503-26
	N.C	37	38	DRUM PG	503-30
503-31	CAPSTAN FG A	39	40	T REEL MOTOR (-)	506-12
	N.C	41	42	CAPSTAN FG B	503-32
503-33	EEPROM-SV RESET	43	44	T REEL MOTOR (+)	506-13
	N.C	45	46	L:MS EXIST1	503-34
506-1	TENSION SENSOR VEE	47	48	T BRAKE SOL.HOLDER	506-14
	N.C	49	50	TENSION SENSOR (+)	506-2
506-3	TENSION SENSOR (-)	51	52	T BRAKE SOL.STARTER	506-15
107-49, 112-66	SFY-P BANK	53	54	TENSION SENSOR VCC	506-4
506-5	END SENSOR (X)	55	56	T BRAKE SOL.VCC	506-16
107-48	SFY-P TBC EN	57	58	SV SI1	506-6
506-7	SV SO1	59	60	S REEL MOTOR (+)	506-19
112-67	FRAME PULSE	61	62	SV SCK1	506-8
506-9	EEPROM-SV CS	63	64	S REEL MOTOR (-)	506-20
	N.C	65	66	EEPROM-SV BUSY	506-10
506-11	THERMO SENSOR	67	68	S BRAKE SOL.HOLDER	506-21
	N.C	69	70	T REEL FG B	506-17
506-18	T REEL FG A	71	72	S BRAKE SOL.STARTER	506-22
111-63	H:EXT SYNC MODE	73	74	S REEL FG B	506-24
506-25	S REEL FG A	75	76	S BRAKE SOL.VCC	506-23
111-65	H:EXT BURST EXIST	77	78	TOP/END LED VCC	506-29
506-28	TOP SENSOR (X)	79	80	POSITION MOTOR (-)	506-26
503-36	REC INH.SW (X)	81	82	H:S POSITION	506-30
506-31	H:L POSITION	83	84	POSITION MOTOR (+)	506-27
	REG +3.15V	85	86	REG +3.15V	
	REG +3.15V	87	88	REG +3.15V	
	REG +5V	89	90	REG +5V	
	REG +5V	91	92	REG +5V	
	MECHA +12V	93	94	MECHA +12V	
	MECHA +12V	95	96	MECHA +12V	
	GND	97	98	GND	
	GND	99	100	GND	

	CN801				
	GND	1	2	GND	
	REG +3.15V	3	4	REG +3.15V	
	UNREG +6.8V	5	6	UNREG +6.8V	
116-41	PB-O PB CONT	7	8	PB-E PB CONT	116-42
116-40	PB-O RF (X)	9	10	PB-O RF (Y)	116-37
116-38	PB-O RF (G)	11	12	GND	116-35
116-36	PB-E RF (X)	13	14	PB-E RF (Y)	116-33
116-34	PB-E RF (G)	15	16	L:10U	116-31
116-32	SPPB-O RF (X)	17	18	SPPB-O RF (Y)	116-29
116-30	SPPB-O RF (G)	19	20	REC-O CURRENT	116-27
116-28	REC-O CLOCK	21	22	REC-O AREA	116-25

	CN802				
116-26	REC-O DATA	1	2	REC-O POWER SAVE	116-23
116-19	GND	3	4	SPPB-E RF (X)	116-20
116-17	SPPB-E RF (Y)	5	6	SPPB-E RF (G)	116-18
116-15	GND	7	8	REC-E CURRENT	116-16
116-13	REC-E AREA	9	10	REC-E CLOCK	116-14
116-11	REC-E DATA	11	12	REC-E POWER SAVE	116-12
	GND	13	14	GND	
	UNREG -5V	15	16	UNREG -5V	
	UNREG +6.8V	17	18	UNREG +6.8V	
116-3	ERASE CURRENT	19	20	ERASE CONT	116-4
116-1	ERASE (G)	21	22	ERASE (X)	116-2

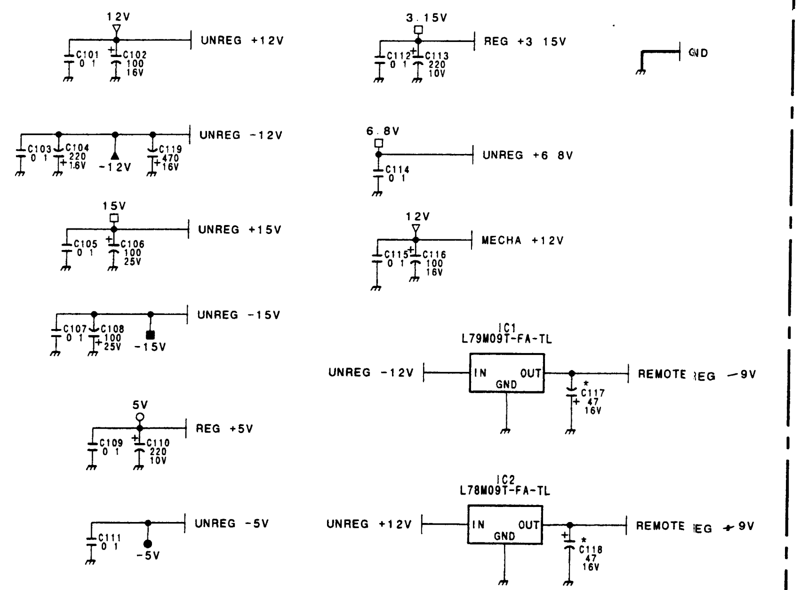

*

REF NO.	CHANGED INFORMATION	LOT NO.
C117, 118	47 → 47 16V	712-

1

2

3

4

5

RP-101

	CN116				
802-21	ERASE (G)	1	2	ERASE (X)	802-22
802-19	ERASE CURRENT	3	4	ERASE CONT	802-20
	GND	5	6	GND	
	GND	7	8	GND	
	GND	9	10	GND	
802-11	REC-E DATA	11	12	REC-E POWER SAVE	802-12
802-9	REC-E AREA	13	14	REC-E CLOCK	802-10
802-7	GND	15	16	REC-E CURRENT	802-8
802-5	SPPB-E RF (Y)	17	18	SPPB-E RF (G)	802-6
	GND	19	20	SPPB-E RF (X)	802-4
	N.C	21	22	N.C	
802-2	REC-O POWER SAVE	23	24	GND	
801-22	REC-O AREA	25	26	REC-O DATA	802-1
801-20	REC-O CURRENT	27	28	REC-O CLOCK	801-21
801-18	SPPB-O RF (Y)	29	30	SPPB-O RF (G)	801-19
801-16. 108-28	L:10U	31	32	SPPB-O RF (X)	801-17
801-14	PB-E RF (Y)	33	34	PB-E RF (G)	801-15
	GND	35	36	PB-E RF (X)	801-13
801-10	PB-O RF (Y)	37	38	PB-O RF (G)	801-11
	GND	39	40	PB-O RF (X)	801-9
801-7	PB-O PB CONT	41	42	PB-E PB CONT	801-8
	GND	43	44	GND	
	N.C	45	46	N.C	
112-65. 114-6. 107-10	TRKT-P	47	48	FLTT1-P	112-63. 114-7. 107-14
114-43	OCH ATF GAIN CONT.	49	50	OCH ATF RF CUT	114-44
114-45	L:TEST	51	52	OCH ATF ERROR (X)	114-46
114-47	OCH ATF ERROR (G)	53	54	ECH ATF GAIN CONT.	114-48
114-49	ATF SEL	55	56	ECH ATF RF CUT	114-50
114-51	ECH ATF ERROR (X)	57	58	ECH ATF ERROR (G)	114-52
114-53	L:ITI CENTER	59	60	EEPROM RP BUSY	114-54
114-55	EEPROM RP CS	61	62	EEPROM RP RESET	114-56
114-57	RP D/A LD1	63	64	RP D/A LD2	114-58
114-59	RP D/A LD3	65	66	N.C	
114-61	SV SI2	67	68	SV SO2	114-62
114-63	SV SCK2	69	70	SV SI3	114-65
114-66	SV SO3	71	72	SV SCK3	114-67
114-68	CHCD-P1 CS	73	74	CHCD-P2 CS	114-69
114-70	CHCD-R1 CS	75	76	CHCD-R2 CS	114-71
114-72	L:CHCD RESET	77	78	PB SW REF	114-73
114-74	SUBCODE AREA	79	80	SSA 30R	114-75
114-76. 108-9	REC SW REF	81	82	FIFO-R CS	114-78
114-80	ATF SW	83	84	R-VAR FRP	107-2
107-1	P-VAR FRP	85	86	N.C	
	GND	87	88	GND	
	GND	89	90	GND	
	GND	91	92	GND	
108-10	DTSC0	93	94	DTSC1	108-11
108-12	DTSC2	95	96	DTSC3	108-13
108-14	DTSC4	97	98	DTSC5	108-15
108-16	DTSC6	99	100	DTSC7	108-17
108-18	FRPSC-R	101	102	TRPSC-R	108-19
108-20	DRCKREF	103	104	13.5MHZ	108-21
108-22	VRCKCS-R	105	106	VRCKCS-P	108-87
	N.C	107	108	FRPSC-P	108-86
108-85	TRPSC-P	109	110	SYCS	108-89. 102-50
108-90	SCDVCS	111	112	VADVCS	108-91. 102-51
108-92. 102-52	VPCKCS	113	114	GND	
108-93. 102-54	DTCS0	115	116	DTCS1	108-94. 102-55
108-95. 102-56	DTCS2	117	118	DTCS3	108-96. 102-58
108-97. 102-59	DTCS4	119	120	DTCS5	108-98. 102-60
108-99. 102-62	DTCS6	121	122	DTCS7	108-100. 102-63
	GND	123	124	GND	
	GND	125	126	GND	
	REG +3.15V	127	128	REG +5V	
	REG +3.15V	129	130	REG +5V	
	UNREG -5V	131	132	UNREG +6.8V	
	UNREG -5V	133	134	UNREG +6.8V	
	UNREG -12V	135	136	UNREG +12V	
	UNREG -12V	137	138	UNREG +12V	
	GND	139	140	GND	
	GND	141	142	GND	
	GND	143	144	GND	
	GND	145	146	GND	
	GND	147	148	GND	

DA-119

	CN101				
606-10	AUDIO CH-4 OUTPUT (G)	1	2	AUDIO CH-4 OUTPUT (Y)	606-11
606-12	AUDIO CH-4 OUTPUT (X)	3	4	AUDIO CH-3 OUTPUT (Y)	606-8
606-9	AUDIO CH-3 OUTPUT (X)	5	6	AUDIO CH-3 OUTPUT (G)	606-7
606-4	AUDIO CH-2 OUTPUT (G)	7	8	AUDIO CH-2 OUTPUT (Y)	606-6
606-6	AUDIO CH-2 OUTPUT (X)	9	10	AUDIO CH-1 OUTPUT (Y)	606-3
606-3	AUDIO CH-1 OUTPUT (X)	11	12	AUDIO CH-1 OUTPUT (G)	606-1
602-8	AUDIO MONI. OUTPUT (X)	13	14	AUDIO MONI. OUTPUT (G)	602-9
	N.C	15	16	N.C	
	N.C	17	18	N.C	
	N.C	19	20	N.C	
	N.C	21	22	N.C	
	N.C	23	24	N.C	
	N.C	25	26	N.C	
	N.C	27	28	N.C	
	N.C	29	30	N.C	
104-20. 107-9	FLTT1-P2	31	32	TRKT-P2	104-19. 107-6
107-11. 104-23. 112-62. 114-9	FLTT1-R	33	34	TRKT-R	107-8. 104-22. 114-8
	N.C	35	36	FLTA-R	107-12. 104-24
	N.C	37	38	SPCK3-R	107-22
	N.C	39	40	N.C	
104-41. 112-10	AUDIO OUTPUT MUTE	41	42	AUDIO RC-P1 MUTE	112-11
112-12	AUDIO RC-P2 MUTE	43	44	AUDIO PB RESET	112-13
112-14	AUD SFY CS	45	46	AUD JOG CS	112-47
112-48	AUD-P1 CS	47	48	AUD-P2 CS	112-50
112-51	FS CONT-P CS	49	50	DSP-P1 CS	112-52
112-53	DSP-P2 CS	51	52	DSP-P1 XLAT	112-54
112-55	DSP-P2 XLAT	53	54	L:DSP-P1 MUTE	112-56
112-57	L:DSP-P2 MUTE	55	56	SP SCK0	112-58
112-59	SP SO0	57	58	SP SI0	112-60
112-61	DSP-P READY	59	60	N.C	
	GND	61	62	D1 AD0	107-64. 104-62
107-63. 104-63	D1 AD1	63	64	D1 AD2	107-66. 104-64
107-65. 104-65	D1 AD3	65	66	D1 AD4	107-68. 104-66
107-67. 104-67	D1 AD5	67	68	D1 AD6	107-70. 104-68
107-69. 104-69	D1 AD7	69	70	AES CS	104-61
107-71. 104-71	D1 A8	71	72	D1 A9	107-74. 104-72
107-73. 104-73	D1 ASTB	73	74	D1 RD	107-76. 104-74
107-75. 104-75	D1 WR	75	76	D1 C STS CHG	104-76
	UNREG -15V	77	78	UNREG -15V	
	UNREG -15V	79	80	UNREG -15V	
	UNREG +15V	81	82	UNREG +15V	
	UNREG +15V	83	84	UNREG +15V	
	UNREG -12V	85	86	UNREG -12V	
	UNREG -12V	87	88	UNREG -12V	
	UNREG -5V	89	90	UNREG -5V	
	UNREG -5V	91	92	UNREG -5V	
	UNREG +12V	93	94	UNREG +12V	
	UNREG +12V	95	96	UNREG +12V	
	GND	97	98	GND	
	GND	99	100	GND	

MB-712 (3/6)
BOARD SUFFIX : -13
MODEL DSR-80/80P

SONY-SP0754 / DRUCK 460

MB-712 (4/6): MOTHER BOARD

DSR-80/80P

1

2

3

4

5

DA-119

	CN102				
107-78	SDIA REC DT1/2	1	2	SDIA REC DT3/4	107-79
107-81	SDIA REC BCK	3	4	SDIA REC LRCK	107-80
	GND	5	6	SDIA REC 256FS	107-82
107-84	SDIA REC ERR2	7	8	SDIA REC ERR1	107-83
	GND	9	10	SDI A DT3/4	109-71. 105-2
109-70. 105-1	SDI A DT1/2	11	12	SDI A BCK	109-72. 105-4
	GND	13	14	SDI A 128FS	109-74. 105-6
109-73. 105-5	SDI A LRCK	15	16	AES IN DT1/2	105-8
	GND	17	18	AES IN LRCK1/2	105-10
105-9	AES IN BCK1/2	19	20	AES IN ERR1/2	105-12
	N.C	21	22	AES IN DT3/4	105-14
105-13	AES IN 256FS1/2	23	24	AES IN LRCK3/4	105-16
	N.C	25	26	AES IN ERR3/4	105-18
105-17	AES IN BCK3/4	27	28	AES IN 256FS3/4	105-20. 105-21
	GND	29	30	GND	
	N.C	31	32	TRCK4-R	108-25
	GND	33	34	AUEN-R	108-29
108-30	ADTO-R	35	36	SADT-R	108-31
	GND	37	38	START-R	108-33
	N.C	39	40	N.C	
		41	42		
	N.C	43	44	TRCK4-P	108-82
	N.C	45	46	N.C	
108-81	SADT-P	47	48	START-P	108-83
	GND	49	50	SYCS	116-110. 108-89
116-112. 108-91	VADVCS	51	52	VPCKCS	116-113. 108-92
	GND	53	54	DTCS0	116-115. 108-93
116-116. 108-94	DTCS1	55	56	DTCS2	116-117. 108-95
	GND	57	58	DTCS3	116-118. 108-96
116-119. 108-97	DTCS4	59	60	DTCS5	116-120. 108-98
	GND	61	62	DTCS6	116-121. 108-99
116-122. 108-100	DTCS7	63	64	GND	
	N.C	65	66	N.C	
	N.C	67	68	N.C	
	N.C	69	70	N.C	
	N.C	71	72	N.C	
	N.C	73	74	N.C	
	N.C	75	76	N.C	
	N.C	77	78	N.C	
	N.C	79	80	N.C	
	N.C	81	82	N.C	
	N.C	83	84	N.C	
	N.C	85	86	N.C	
	N.C	87	88	N.C	
	N.C	89	90	N.C	
	N.C	91	92	N.C	
	N.C	93	94	N.C	
	N.C	95	96	N.C	
	N.C	97	98	N.C	
	N.C	99	100	N.C	

DA-119

	CN103				
	GND	1	2	GND	
	N.C	3	4	QSDA DATA	106-8
	GND	5	6	QSDA START	106-10
106-11	QSDA FRAME	7	8	N.C	
	GND	9	10	N.C	
	N.C	11	12	QSDI CORE R2 CS	113-49
113-48	QSDI CORE R1 CS	13	14	AUD EDIT CS	113-50
113-51	FS CONT QSDI CS	15	16	AUD-R1 CS	113-52
113-57	L:FLTA ERR	17	18	AUD-R2 CS	113-54
113-53	EDIT PLD CS	19	20	DSP-R READY	113-56
	N.C	21	22	FS CONT-R CS	113-58
113-59	DSP-R1 CS	23	24	DSP-R2 CS	113-60
113-61	L:DSP-R1 MUTE	25	26	DSP-R1 XLAT	113-62
113-63	DSP-R2 XLAT	27	28	SP SI-S2	113-64
113-65	L:DSP-R2 MUTE	29	30	SP SCK-S2	113-66
113-67	SP SO-S2	31	32	N.C	
113-69	DA-P1 XLAT	33	34	N.C	
113-71	RC-P1 XLAT	35	36	RC-P2 XLAT	113-72
113-73	DA-P2 XLAT	37	38	DA ID	113-77
115-25	JOG SPEED	39	40	HEADPHONE CH-1 VR (X)	701-7
701-6. 701-8. 701-10. 701-12	HEADPHONE VR (G)	41	42	HEADPHONE CH-2 VR (X)	701-9
	N.C	43	44	N C	
	N.C	45	46	SPCK3-P	109-39
	N.C	47	48	N.C	
	N.C	49	50	N.C	
	N.C	51	52	N.C	
	N.C	53	54	N.C	
702-3	AUDIO CH-1 VR RET (X)	55	56	AUDIO CH-1 VR RET (Y)	702-4
	GND	57	58	N.C	
	N.C	59	60	N.C	
	GND	61	62	N.C	
702-7	AUDIO CH-2 VR RET (X)	63	64	AUDIO CH-2 VR RET (Y)	702-8
	GND	65	66	N.C	
	N.C	67	68	N.C	
	GND	69	70	N.C	
702-11	AUDIO CH-3 VR RET (X)	71	72	AUDIO CH-3 VR RET (Y)	702-12
	GND	73	74	N.C	
	GND	75	76	N.C	
	GND	77	78	N.C	
702-15	AUDIO CH-4 VR RET (X)	79	80	AUDIO CH-4 VR RET (Y)	702-16
	GND	81	82	N.C	
	N.C	83	84	N.C	
	REG +3.15V	85	86	REG +3.15V	
	REG +3.15V	87	88	REG +3.15V	
	REG +5V	89	90	REG +5V	
	REG +5V	91	92	REG +5V	
	UNREG +6.8V	93	94	UNREG +6.8V	
	UNREG +6.8V	95	96	UNREG +6.8V	
	GND	97	98	GND	
	GND	99	100	GND	

MB-712 (4/6)
BOARD SUFFIX : -13
MODEL DSR-80/80P

MB-712 (5/6): MOTHER BOARD

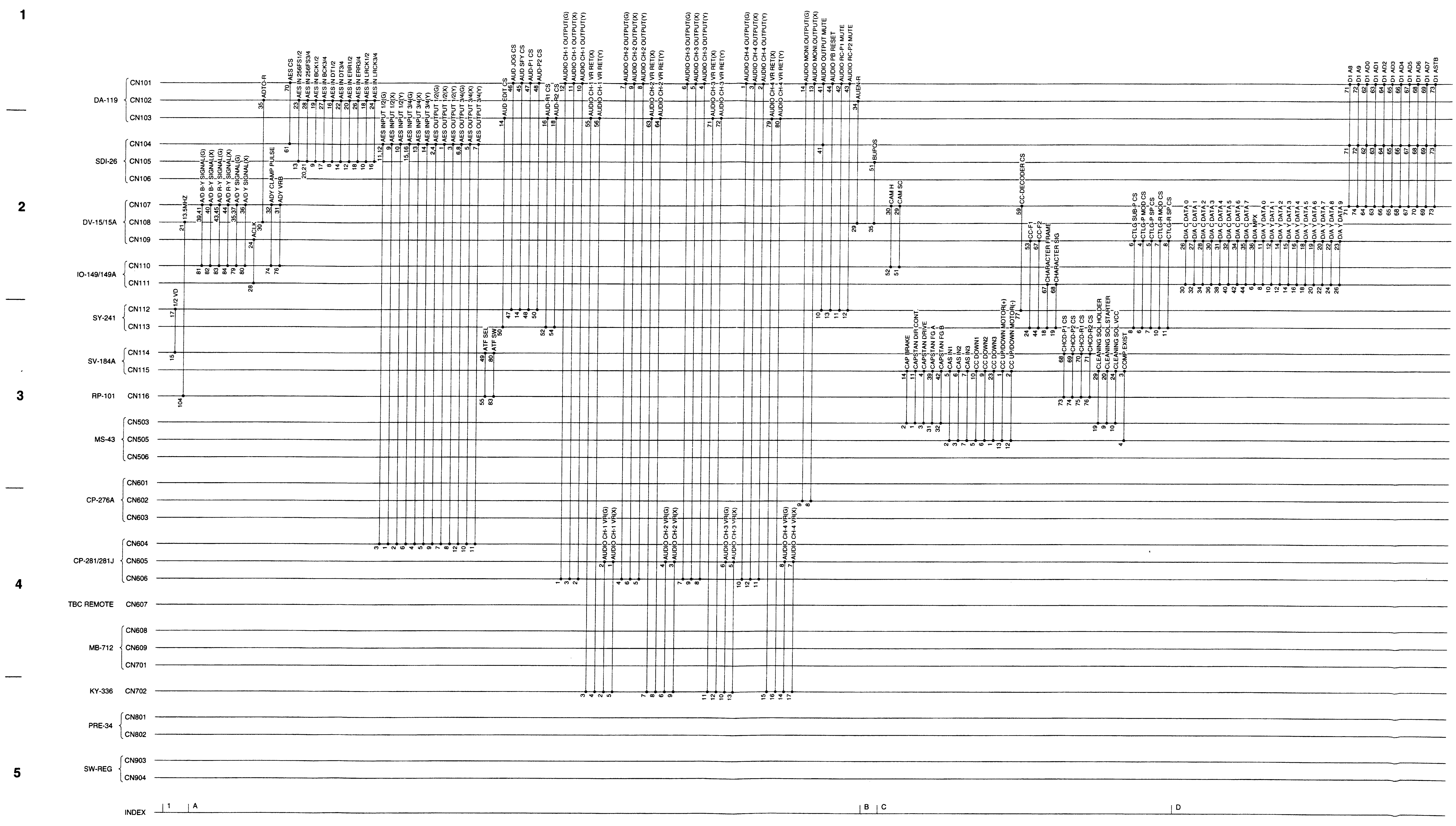

DSR-80/80P

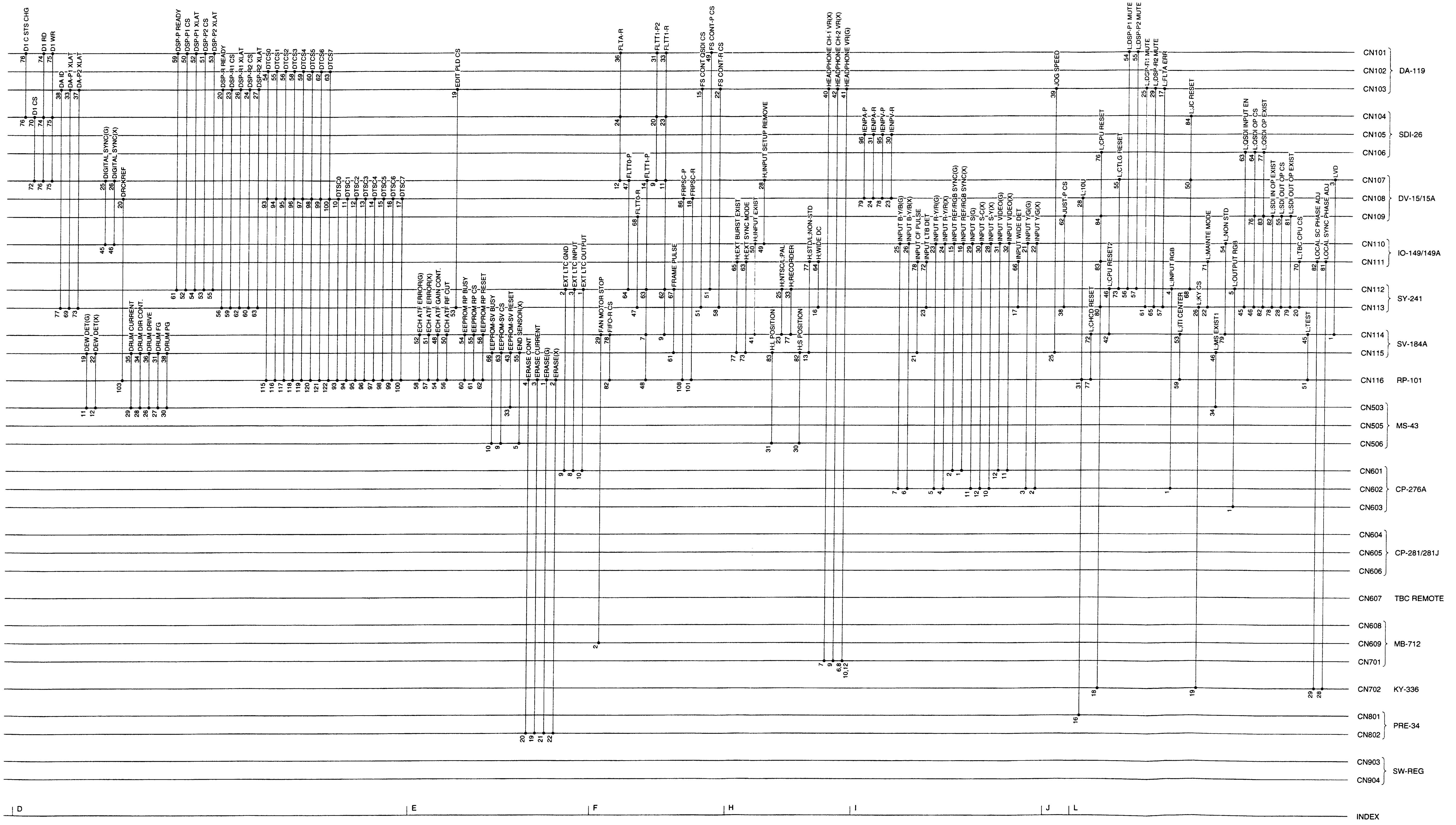

MB-712 (5/6)
BOARD SUFFIX : -13
MODEL DSR-80/80P

MB-712 (6/6): MOTHER BOARD

DSR-80/80P

DSR-80/80P

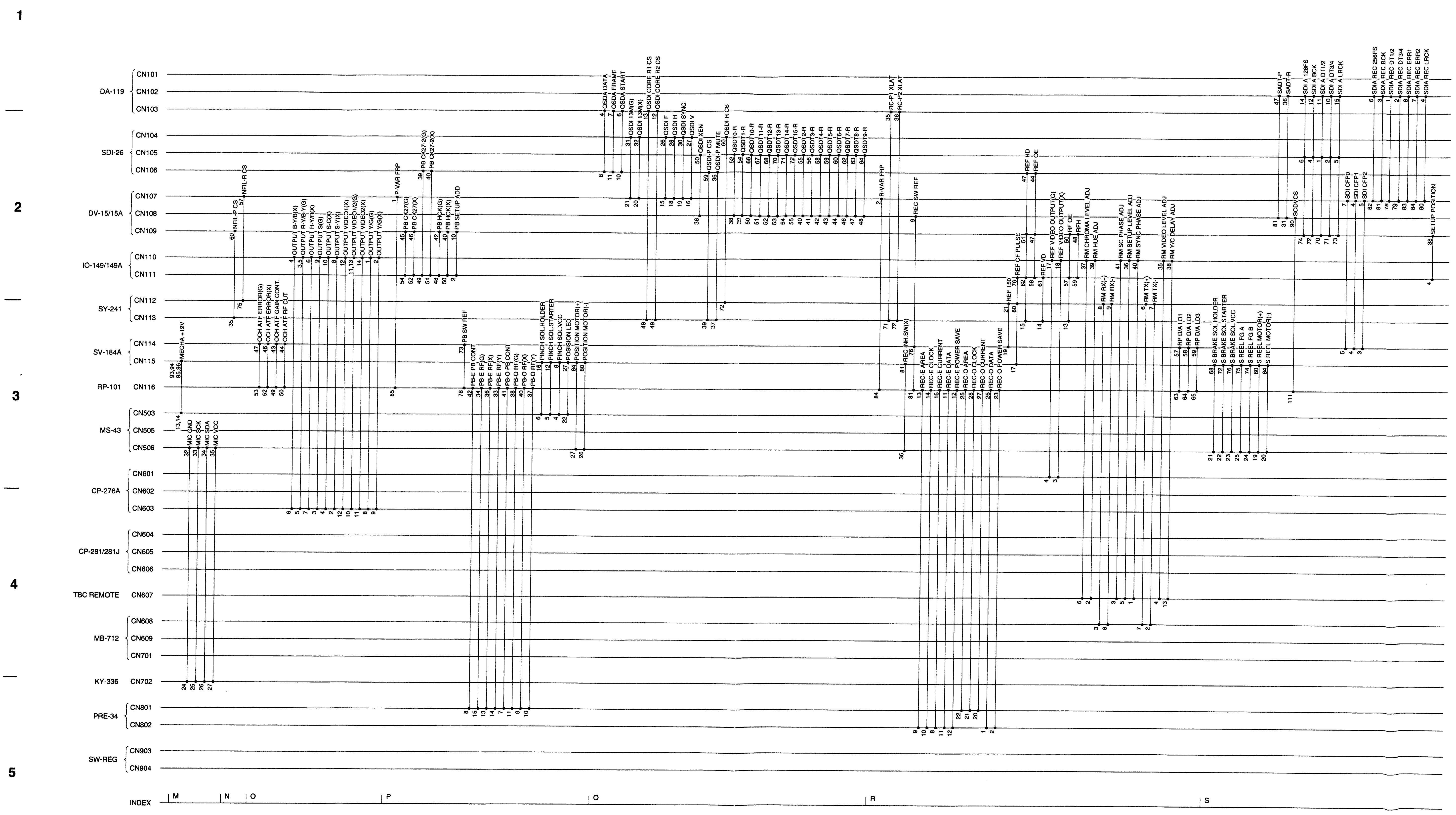

DSR-80/80P

A B C D E F G H

SONY-SP0754 / DRUCK 464

DSR-80/80P

DSR-80/80P

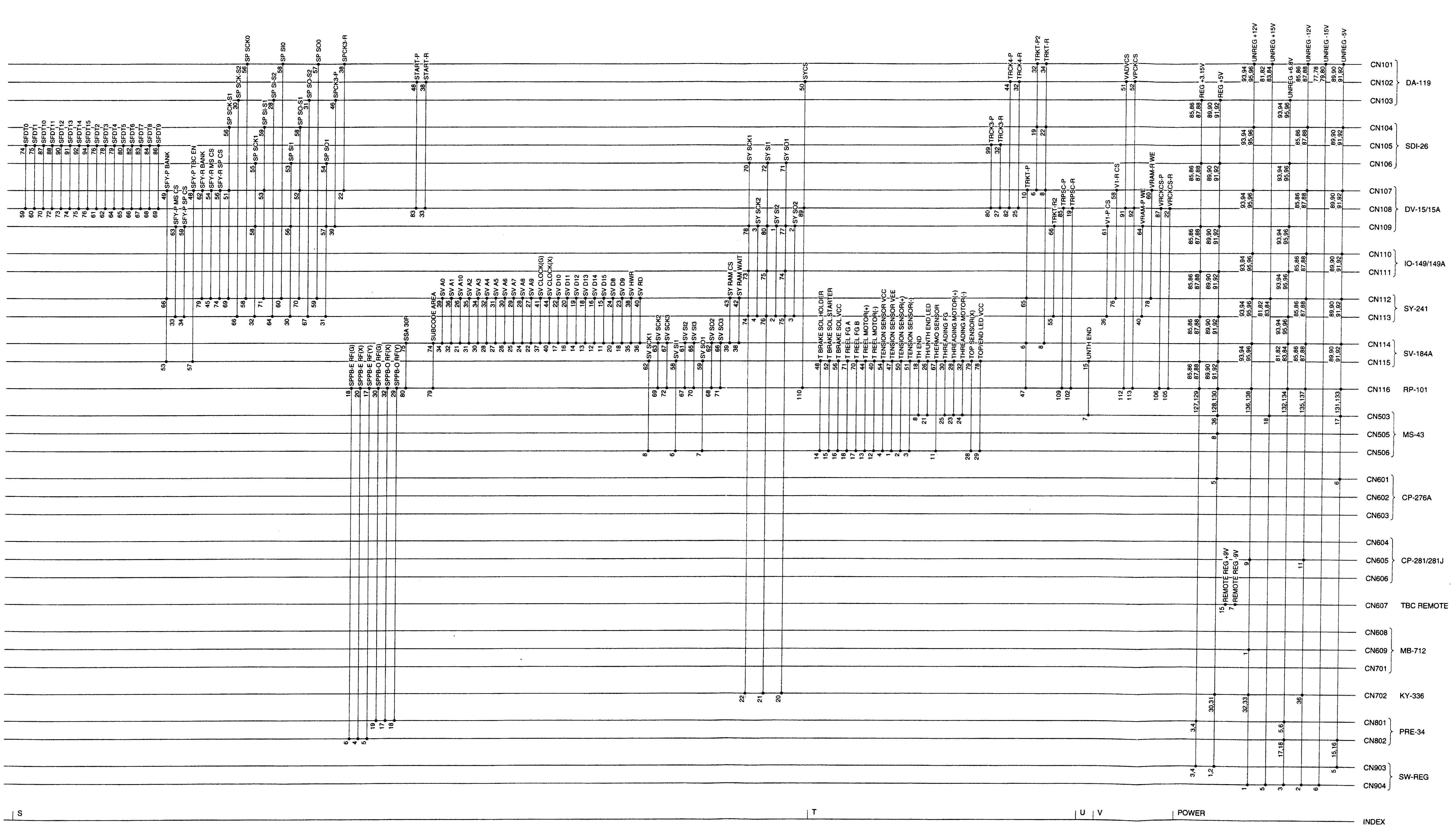

1

2

3

4

5

MB-712 (6/6)

BOARD SUFFIX : -13
MODEL DSR-80/80P

 MB-712 (1/6)

MB-712 (1/6): MOTHER BOARD

 DSR-80/80P

10-149

CN110

603-8	OUTPUT Y/G (G)	1	2	OUTPUT Y/G (X)	603-9
603-5. 110-5	OUTPUT R-Y/B-Y (G)	3	4	OUTPUT B-Y/B (X)	603-6
603-5. 110-3	OUTPUT R-Y/B-Y (G)	5	6	OUTPUT R-Y/R (X)	603-7
	GND	7	8	OUTPUT S-Y (X)	603-2
603-3	OUTPUT S (G)	9	10	OUTPUT S-C (X)	603-4
603-10. 110-13	OUTPUT VIDEO1/2 (G)	11	12	OUTPUT VIDEO1 (X)	603-12
603-10. 110-11	OUTPUT VIDEO1/2 (G)	13	14	OUTPUT VIDEO2 (X)	603-11
601-2	INPUT REF/RGB SYNC (G)	15	16	INPUT REF/RGB SYNC (X)	601-1
601-4	REF VIDEO OUTPUT (G)	17	18	REF VIDEO OUTPUT (X)	601-3
	N.C	19	20	N.C	
602-3	INPUT Y/G (G)	21	22	INPUT Y/G (X)	602-2
602-5	INPUT R-Y/R (G)	23	24	INPUT R-Y/R (X)	602-4
602-7	INPUT B-Y/B (G)	25	26	INPUT B-Y/B (X)	602-6
	GND	27	28	INPUT S-Y (X)	602-10
602-11	INPUT S (G)	29	30	INPUT S-C (X)	602-12
601-12	INPUT VIDEO (G)	31	32	INPUT VIDEO (X)	601-11
	GND	33	34	GND	
607-4	RM VIDEO LEVEL ADJ	35	36	RM SETUP LEVEL ADJ	607-5
607-6	RM CHROMA LEVEL ADJ	37	38	RM Y/C DELAY ADJ	607-13
607-2	RM HUE ADJ	39	40	RM SYNC PHASE ADJ	607-1
607-3	RM SC PHASE ADJ	41	42	N.C	
	N.C	43	44	N.C	
107-25	DIGITAL SYNC (G)	45	46	DIGITAL SYNC (X)	107-26
	N.C	47	48	N.C	
107-28	H:INPUT SETUP REMOVE	49	50	H:INPUT EXIST	114-41
107-29	CAM SC	51	52	CAM H	107-20
	N.C	53	54	L:NON STD	114-79
	N.C	55	56	N.C	
	N.C	57	58	N.C	
	N.C	59	60	N.C	
	N.C	61	62	N.C	
	N.C	63	64	N.C	
	N.C	65	66	N.C	
	N.C	67	68	N.C	
	N.C	69	70	N.C	
	N.C	71	72	N.C	
	GND	73	74	ADY CLAMP PULSE	107-32
	GND	75	76	ADY VRB	107-31
	GND	77	78	GND	
107-35. 107-37	A/D Y SIGNAL (G)	79	80	A/D Y SIGNAL (X)	107-36
107-39. 107-41	A/D B-Y SIGNAL (G)	81	82	A/D B-Y SIGNAL (X)	107-40
107-43. 107-45	A/D R-Y SIGNAL (G)	83	84	A/D R-Y SIGNAL (X)	107-44
	UNREG -12V	85	86	UNREG -12V	
	UNREG -12V	87	88	UNREG -12V	
	UNREG -5V	89	90	UNREG -5V	
	UNREG -5V	91	92	UNREG -5V	
	UNREG +12V	93	94	UNREG +12V	
	UNREG +12V	95	96	UNREG +12V	
	GND	97	98	GND	
	GND	99	100	GND	

10-149

CN111

	N.C	1	2	PB SETUP ADD	109-10
	GND	3	4	SETUP POSITION	109-38
	GND	5	6	D/A MPX	109-36
	N.C	7	8	D/A Y DATA 0	109-11
	GND	9	10	D/A Y DATA 1	109-12
	N.C	11	12	D/A Y DATA 2	109-14
	GND	13	14	D/A Y DATA 3	109-15
	N.C	15	16	D/A Y DATA 4	109-16
	GND	17	18	D/A Y DATA 5	109-18
	N.C	19	20	D/A Y DATA 6	109-19
	GND	21	22	D/A Y DATA 7	109-20
	N.C	23	24	D/A Y DATA 8	109-22
	GND	25	26	D/A Y DATA 9	109-23
	GND	27	28	ACLK	109-24
	GND	29	30	D/A C DATA 0	109-26
	N.C	31	32	D/A C DATA 1	109-27
	GND	33	34	D/A C DATA 2	109-28
	N.C	35	36	D/A C DATA 3	109-30
	GND	37	38	D/A C DATA 4	109-31
	N.C	39	40	D/A C DATA 5	109-32
	GND	41	42	D/A C DATA 6	109-34
	N.C	43	44	D/A C DATA 7	109-35
	GND	45	46	GND	
	N.C	47	48	PB HCK (G)	109-42
106-39	PB CK27-2 (G)	49	50	PB HCK (X)	109-40
106-40	PB CK27-2 (X)	51	52	PB CK27 (X)	109-46
	N.C	53	54	PB CK27 (G)	109-45
	N.C	55	56	N.C	109-43
109-50. 113-13	RF OE	57	58	REF OE	109-47. 106-44
109-48	RFH	59	60	GND	
113-14	REF VD	61	62	REF HD	109-51. 106-47. 113-15
115-73	H:EXT SYNC MODE	63	64	H:WIDE DC	113-16
115-77	H:EXT BURST EXIST	65	66	INPUT WIDE DET	113-17
113-18	CHARACTER FRAME	67	68	CHARACTER SIG	113-19
	GND	69	70	L:TBC CPU CS	113-20
113-22	L:MAINTE MODE	71	72	INPUT LTB DET	113-23
702-22. 109-78. 106-70. 113-74	SY SCK1	73	74	SY SO1	702-20. 109-77. 106-71. 113-75
702-21. 109-80. 106-72. 113-76	SY SI1	75	76	REF CF PULSE	112-80. 115-17
115-13	H:STD/L:NON-STD	77	78	INPUT CF PULSE	115-21
	GND	79	80	N.C	
702-28	LOCAL SYNC PHASE ADJ	81	82	LOCAL SC PHASE ADJ	702-29
702-18. 109-84. 106-76. 113-80	L:CPU RESET	83	84	N.C	
	REG +3.15V	85	86	REG +3.15V	
	REG +3.15V	87	88	REG +3.15V	
	REG +5V	89	90	REG +5V	
	REG +5V	91	92	REG +5V	
	UNREG +6.8V	93	94	UNREG +6.8V	
	UNREG +6.8V	95	96	UNREG +6.8V	
	GND	97	98	GND	
	GND	99	100	GND	

DV-15

CN107

116-85	P-VAR FRP	1	2	R-VAR FRP	116-84
114-1	LVD	3	4	SDI CFP1	114-4
114-3	SDI CFP2	5	6	TRKT-P2	104-19. 101-32
114-5	SDI CFP0	7	8	TRKT-R	104-22. 114-8. 101-34
104-20. 101-31	FLTT1-P2	9	10	TRKT-P	112-65. 114-6. 116-47
104-23. 112-62. 114-9. 101-33	FLTT1-R	11	12	FLTA-R	104-24. 101-36
	GND	13	14	FLTT1-P	112-63. 114-7. 116-48
104-26	QSDI F	15	16	QSDI V	104-27
	N.C	17	18	QSDI H	104-28
104-30	QSDI SYNC	19	20	QSDI 13M (X)	104-32
104-31	QSDI 13M (G)	21	22	SPCK3-R	101-38
	N.C	23	24	N.C	
110-45	DIGITAL SYNC (G)	25	26	DIGITAL SYNC (X)	110-46
	GND	27	28	H:INPUT SETUP REMOVE	110-49
110-51	CAM SC	29	30	CAM H	110-52
110-76	ADY VRB	31	32	ADY CLAMP PULSE	110-74
		33	34	N.C	
110-79. 107-37	A/D Y SIGNAL (G)	35	36	A/D Y SIGNAL (X)	110-80
110-74. 107-35	A/D Y SIGNAL (G)	37	38	N.C	
110-81. 107-41	A/D B-Y SIGNAL (G)	39	40	A/D B-Y SIGNAL (X)	110-82
110-81. 107-39	A/D B-Y SIGNAL (G)	41	42	N.C	
110-83. 107-45	A/D R-Y SIGNAL (G)	43	44	A/D R-Y SIGNAL (X)	110-84
110-83. 107-43	A/D R-Y SIGNAL (G)	45	46	N.C	
112-64	FLTT0-P	47	48	SFY-P TBC EN	115-57
112-66. 115-53	SFY-P BANK	49	50	L:JC RESET	112-68. 104-84
104-56. 112-69	SP SCK-S1	51	52	SP SO-S1	104-58. 112-70
104-59. 112-71	SP SI-S1	53	54	SFY-R MS CS	112-45
112-73	L:CTLG RESET	55	56	SFY-R SP CS	112-74
112-75	NFIL-R CS	57	58	V1-R CS	112-76
112-77	CC-DECODER CS	59	60	VRAM-R WE	112-78
	GND	61	62	SFY-R BANK	112-79
104-63. 101-63	D1 AD1	63	64	D1 AD0	104-62. 101-62
104-65. 101-65	D1 AD3	65	66	D1 AD2	104-64. 101-64
104-67. 101-67	D1 AD5	67	68	D1 AD4	104-66. 101-66
104-69. 101-69	D1 AD7	69	70	D1 AD6	104-68. 101-68
104-71. 101-71	D1 A8	71	72	D1 CS	104-70
104-73. 101-73	D1 ASTB	73	74	D1 A9	104-72. 101-72
104-75. 101-75	D1 WR	75	76	D1 RD	104-74. 101-74
	GND	77	78	SDIA REC DT1/2	102-1
102-2	SDIA REC DT3/4	79	80	SDIA REC LRCK	102-4
102-3	SDIA REC BCK	81	82	SDIA REC 256FS	102-6
102-8	SDIA REC ERR1	83	84	SDIA REC ERR2	102-7
	UNREG -12V	85	86	UNREG -12V	
	UNREG -12V	87	88	UNREG -12V	
	UNREG -5V	89	90	UNREG -5V	
	UNREG -5V	91	92	UNREG -5V	
	UNREG +12V	93	94	UNREG +12V	
	UNREG +12V	95	96	UNREG +12V	
	GND	97	98	GND	
	GND	99	100	GND	

CP-276

CN601

1	INPUT REF/RGB SYNC (X)	110-16
2	INPUT REF/RGB SYNC (G)	110-15
3	REF VIDEO OUTPUT (X)	110-18
4	REF VIDEO OUTPUT (G)	110-17
5	REG +5V	
6	UNREG -5V	
7	GND	
8	EXT LTC INPUT	112-3
9	EXT LTC GND	112-2
10	EXT LTC OUTPUT	112-1
11	INPUT VIDEO (X)	110-32
12	INPUT VIDEO (G)	110-31

CP-276

CN602

1	L.INPUT RGB	112-4
2	INPUT Y/G (X)	110-22
3	INPUT Y/G (G)	110-21
4	INPUT R-Y/R (X)	110-24
5	INPUT R-Y/R (G)	110-23
6	INPUT B-Y/B (X)	110-26
7	INPUT B-Y/B (G)	110-25
8	AUDIO MONI OUTPUT (X)	101-13
9	AUDIO MONI OUTPUT (G)	101-14
10	INPUT S-Y (X)	110-28
11	INPUT S (G)	110-29
12	INPUT S-C (X)	110-30

CP-276

CN603

1	L:OUTPUT RGB	112-5
2	OUTPUT S-Y (X)	110-8
3	OUTPUT S (G)	110-9
4	OUTPUT S-C (X)	110-10
5	OUTPUT R-Y/B-Y (G)	110-3. 110-5
6	OUTPUT B-Y/B (X)	110-4
7	OUTPUT R-Y/R (X)	110-6
8	OUTPUT Y/G (G)	110-1
9	OUTPUT Y/G (X)	110-2
10	OUTPUT VIDEO1/2 (G)	110-11. 110-13
11	OUTPUT VIDEO2 (X)	110-14
12	OUTPUT VIDEO1 (X)	110-12

CP-281

CN604

1	AES INPUT 1/2 (X)	104-9
2	AES INPUT 1/2 (Y)	104-10
3	AES INPUT 1/2 (G)	104-11. 104-12
4	AES INPUT 3/4 (X)	104-13
5	AES INPUT 3/4 (Y)	104-14
6	AES INPUT 3/4 (G)	104-15. 104-16
7	AES OUTPUT 1/2 (X)	104-1
8	AES OUTPUT 1/2 (Y)	104-3
9	AES OUTPUT 1/2 (G)	104-2. 104-4
10	AES OUTPUT 3/4 (X)	104-5
11	AES OUTPUT 3/4 (Y)	104-7
12	AES OUTPUT 3/4 (G)	104-6. 104-8

CP-281

CN605

1	AUDIO CH-1 VR (X)	702-5
2	AUDIO CH-1 VR (G)	702-2
3	AUDIO CH-2 VR (X)	702-9
4	AUDIO CH-2 VR (G)	702-6
5	AUDIO CH-3 VR (X)	702-13
6	AUDIO CH-3 VR (G)	702-10
7	AUDIO CH-4 VR (X)	702-17
8	AUDIO CH-4 VR (G)	702-14
9	UNREG +12V	
10	GND	
11	UNREG -12V	
12	N.C	

CP-281

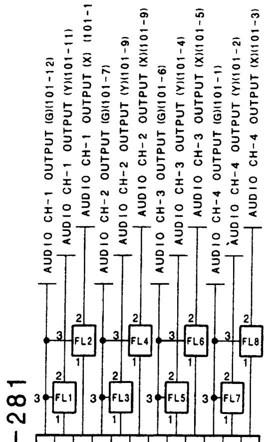

CN606

1	AUDIO CH-1 OUTPUT (G)
2	AUDIO CH-1 OUTPUT (Y)
3	AUDIO CH-1 OUTPUT (X)
4	AUDIO CH-2 OUTPUT (G)
5	AUDIO CH-2 OUTPUT (Y)
6	AUDIO CH-2 OUTPUT (X)
7	AUDIO CH-3 OUTPUT (G)
8	AUDIO CH-3 OUTPUT (Y)
9	AUDIO CH-3 OUTPUT (X)
10	AUDIO CH-4 OUTPUT (G)
11	AUDIO CH-4 OUTPUT (Y)
12	AUDIO CH-4 OUTPUT (X)

 13-146

A | B | C | D | E | F | G | H

SONY-SP0754 / DRUCK 466

DSR-80/80P

1

2

3

4

5

DV-15

CN108

	N.C	1	2	N.C	
	N.C	3	4	N.C	
	N.C	5	6	N.C	
	N.C	7	8	N.C	
116-81. 114-76	REC SW REF	9	10	DTSC0	116-93
116-94	DTSC1	11	12	DTSC2	116-95
116-96	DTSC3	13	14	DTSC4	116-97
116-98	DTSC5	15	16	DTSC6	116-99
116-100	DTSC7	17	18	FRPSC-R	116-101
116-102	TRPSC-R	19	20	DRCKREF	116-103
116-104	13.5MHZ	21	22	VRCKCS-R	116-105
105-30	IENPV-R	23	24	IENPA-R	105-31
102-32	TRCK4-R	25	26	N.C	
105-32	TRCK3-R	27	28	L:10U	116-31. 801-16
102-34	AUEN-R	29	30	ADTO-R	102-35
102-36	SADT-R	31	32	N.C	
102-38	START-R	33	34	N.C	
105-51	BUPQS	35	36	QSDI XEN	105-50
	GND	37	38	QSDT0-R	105-52
105-54	QSDT1-R	39	40	QSDT2-R	105-55
105-56	QSDT3-R	41	42	QSDT4-R	105-58
105-59	QSDT5-R	43	44	QSDT6-R	105-60
105-61	GND	45	46	QSDT7-R	105-62
105-63	QSDT8-R	47	48	QSDT9-R	105-64
105-65	GND	49	50	QSDT10-R	105-66
105-67	QSDT11-R	51	52	QSDT12-R	105-68
105-70	QSDT13-R	53	54	QSDT14-R	105-71
105-72	QSDT15-R	55	56	GND	
105-73	GND	57	58	GND	
105-74	SFDT0	59	60	SFDT1	105-75
105-76	SFDT2	61	62	SFDT3	105-78
105-77	GND	63	64	SFDT4	105-79
105-80	SFDT5	65	66	SFDT6	105-82
105-83	SFDT7	67	68	SFDT8	105-84
105-86	SFDT9	69	70	SFDT10	105-87
105-89	GND	71	72	SFDT11	105-88
105-90	SFDT12	73	74	SFDT13	105-91
105-92	SFDT14	75	76	SFDT15	105-94
	GND	77	78	IENPV-P	105-95
105-96	IENPA-P	79	80	TRCK3-P	105-99
102-47	SADT-P	81	82	TRCK4-P	102-44
102-48	START-P	83	84	N.C	
116-109	TRPSC-P	85	86	FRPSC-P	116-108
116-106	VRCKCS-P	87	88	N.C	
116-110. 102-50	SYCS	89	90	SCDVCS	116-111
116-112. 102-51	VADVCS	91	92	VPCKCS	116-113. 102-52
116-115. 102-54	DTCS0	93	94	DTCS1	116-116. 102-55
116-117. 102-56	DTCS2	95	96	DTCS3	116-118. 102-58
116-119. 102-59	DTCS4	97	98	DTCS5	116-120. 102-60
116-121. 102-62	DTCS6	99	100	DTCS7	116-122. 102-63

DV-15

CN109

113-2	SY SI2	1	2	SY SO2	113-3
113-4	SY SCK2	3	4	CTLG-P MOD CS	113-6
113-7	CTLG-P SP CS	5	6	CTLG SUB-P CS	113-8
113-10	CTLG-R MOD CS	7	8	CTLG-R SP CS	113-11
	GND	9	10	PB SETUP ADD	111-2
111-8	D/A Y DATA 0	11	12	D/A Y DATA 1	111-10
	GND	13	14	D/A Y DATA 2	111-12
111-14	D/A Y DATA 3	15	16	D/A Y DATA 4	111-16
	GND	17	18	D/A Y DATA 5	111-18
111-20	D/A Y DATA 6	19	20	D/A Y DATA 7	111-22
	GND	21	22	D/A Y DATA 8	111-24
111-26	D/A Y DATA 9	23	24	ACLK	111-28
	GND	25	26	D/A C DATA 0	111-30
111-32	D/A C DATA 1	27	28	D/A C DATA 2	111-34
	GND	29	30	D/A C DATA 3	111-36
111-38	D/A C DATA 4	31	32	D/A C DATA 5	111-40
	GND	33	34	D/A C DATA 6	111-42
111-44	D/A C DATA 7	35	36	D/A MPX	111-6
	GND	37	38	SETUP POSITION	111-4
103-46	SPCK3-P	39	40	PB HCK (X)	111-50
	N.C	41	42	PB HCK (G)	111-48
	N.C	43	44	N.C	
111-54	PB CK27 (G)	45	46	PB CK27 (X)	111-52
106-44. 111-58	REF OE	47	48	RFH	111-59
	N.C	49	50	RF OE	111-57. 113-13
106-47. 111-62. 113-15	REF HD	51	52	N.C	
113-24	CC-F1	53	54	N.C	
113-28	L:SDI OUT OP CS	55	56	SP SI1	106-53. 113-30
106-54. 113-31	SP SO1	57	58	SP SCK1	106-55. 113-32
113-34	SFY-P SP CS	59	60	NFIL-P CS	113-35
103-36	V1-P CS	61	62	JUST-P CS	113-38
113-33	SFY-P MS CS	63	64	VRAM-P WE	113-40
	N.C	65	66	TRKT-R2	113-55
113-44	CC-F2	67	68	FLTT0-R	113-47
	N.C	69	70	SDI A DT1/2	105-1. 102-11
102-10. 105-2	SDI A DT3/4	71	72	SDI A BCK	105-4. 102-12
102-15. 105-5	SDI A LRCK	73	74	SDI A 128FS	105-6. 102-14
	N.C	75	76	L:QSDI OP CS	106-64. 113-46
702-20. 106-71. 111-74. 113-75	SY SO1	77	78	SY SCK1	702-22. 106-70. 111-73. 113-74
	N.C	79	80	SY SI1	702-21. 106-72. 111-75. 113-76
113-79	L:SDI OUT OP EXIST	81	82	L:SDI IN OP EXIST	113-78
106-77. 113-82	L:QSDI OP EXIST	83	84	L:CPU RESET	702-18. 106-76. 111-83. 113-80
	REG +3.15V	85	86	REG +3.15V	
	REG +3.15V	87	88	REG +3.15V	
	REG +5V	89	90	REG +5V	
	REG +5V	91	92	REG +5V	
	UNREG +6.8V	93	94	UNREG +6.8V	
	UNREG +6.8V	95	96	UNREG +6.8V	
	GND	97	98	GND	
	GND	99	100	GND	

MS-43

CN503

1	CAPSTAN DIR CONT.	115-11
2	CAP BRAKE	115-14
3	CAPSTAN DRIVE	115-4
4	PINCH SOL.VCC	115-8
5	PINCH SOL.STARTER	115-12
6	PINCH SOL.HOLDER	115-16
7	UNTH END	115-15
8	TH END	115-18
9	CLEANING SOL.STARTER	115-20
10	CLEANING SOL.VCC	115-24
11	DEW DET (G)	115-19
12	DEW DET (X)	115-22
13	MECHA +12V	
14	MECHA +12V	
15	GND	
16	GND	
17	UNREG -5V	
18	UNREG +15V	
19	CLEANING SOL.HOLDER	115-29
20	N.C	
21	TH/UNTH END LED	115-26
22	POSISION LED	115-27
23	THREADING MOTOR (+)	115-28
24	THREADING MOTOR (-)	115-32
25	THREADING FG	115-30
26	DRUM DRIVE	115-36
27	DRUM FG	115-31
28	DRUM DIR CONT	115-34
29	DRUM CURRENT	115-35
30	DRUM PG	115-38
31	CAPSTAN FG A	115-39
32	CAPSTAN FG B	115-42
33	EEPROM-SV RESET	115-43
34	L:MS EXIST1	115-46
35	GND	
36	REG +5V	

CC-75

CN505

1	CC DOWN3	115-23
2	CAS IN1	115-5
3	CAS IN2	115-6
4	COMP.EXIST	115-3
5	CC DOWN1	115-10
6	CC DOWN2	115-9
7	CAS IN3	115-7
8	REG +5V	
9	GND	
10	N.C	
11	N.C	
12	CC UP/DOWN MOTOR (-)	115-2
13	CC UP/DOWN MOTOR (+)	115-1

MS-43

CN506

1	TENSION SENSOR VEE	115-47
2	TENSION SENSOR (+)	115-50
3	TENSION SENSOR (-)	115-51
4	TENSION SENSOR VCC	115-54
5	END SENSOR (X)	115-55
6	SV SI1	115-58
7	SV SO1	115-59
8	SV SCK1	115-62
9	EEPROM-SV CS	115-63
10	EEPROM-SV BUSY	115-66
11	THERMO SENSOR	115-67
12	T REEL MOTOR (-)	115-40
13	T REEL MOTOR (+)	115-44
14	T BRAKE SOL.HOLDER	115-48
15	T BRAKE SOL.STARTER	115-52
16	T BRAKE SOL.VCC	115-56
17	T REEL FG B	115-70
18	T REEL FG A	115-71
19	S REEL MOTOR (+)	115-60
20	S REEL MOTOR (-)	115-64
21	S BRAKE SOL.HOLDER	115-68
22	S BRAKE SOL.STARTER	115-72
23	S BRAKE SOL.VCC	115-76
24	S REEL FG B	115-74
25	S REEL FG A	115-75
26	POSITION MOTOR (-)	115-80
27	POSITION MOTOR (+)	115-84
28	TOP SENSOR (X)	115-79
29	TOP/END LED VCC	115-78
30	H:S POSITION	115-82
31	H:L POSITION	115-83
32	MIC GND	702-24
33	MIC SCK	702-25
34	MIC SDA	702-26
35	MIC VCC	702-27
36	REC INH.SW (X)	115-81

MB-712 (1/6)
BOARD SUFFIX : -11, 12
MODEL DSR-80/80P

I | J | K | L | M | N | O | P

MB-712 (2/6): MOTHER BOARD

DSR-80/80P

SDI-26 — CN104

		CN104			
604-7	AES OUTPUT 1/2 (X)	1	2	AES OUTPUT 1/2 (G)	104-4. 604-9
604-8	AES OUTPUT 1/2 (Y)	3	4	AES OUTPUT 1/2 (G)	104-2. 604-9
604-10	AES OUTPUT 3/4 (X)	5	6	AES OUTPUT 3/4 (G)	104-8. 604-12
604-11	AES OUTPUT 3/4 (Y)	7	8	AES OUTPUT 3/4 (G)	104-6. 604-12
604-1	AES INPUT 1/2 (X)	9	10	AES INPUT 1/2 (Y)	604-2
104-12. 604-3	AES INPUT 1/2 (G)	11	12	AES INPUT 1/2 (G)	104-11. 604-3
604-4	AES INPUT 3/4 (X)	13	14	AES INPUT 3/4 (Y)	604-5
104-15. 604-6	AES INPUT 3/4 (G)	15	16	AES INPUT 3/4 (G)	104-15. 604-6
	N.C	17	18	N.C	
101-32. 107-6	TRKT-P2	19	20	FLTT1-P2	101-31. 107-9
	N.C	21	22	TRKT-R	107-8. 114-8. 101-34
107-11. 112-62. 114-9. 101-33	FLTT1-R	23	24	FLTA-R	107-12. 101-36
	N.C	25	26	QSDI F	107-15
107-16	QSDI V	27	28	QSDI H	107-18
	GND	29	30	QSDI SYNC	107-19
107-21	QSDI 13M (G)	31	32	QSDI 13M (X)	107-20
	N.C	33	34	N.C	
	N.C	35	36	N.C	
	N.C	37	38	N.C	
	GND	39	40	N.C	
112-10. 101-41	AUDIO OUTPUT MUTE	41	42	N.C	
	N.C	43	44	N.C	
	N.C	45	46	N.C	
	N.C	47	48	N.C	
	N.C	49	50	N.C	
	N.C	51	52	N.C	
	N.C	53	54	N.C	
	N.C	55	56	SP SCK-S1	107-51. 112-69
	GND	57	58	SP SO-S1	107-52. 112-70
107-53. 112-71	SP SI-S1	59	60	QSDI-R CS	112-72
101-70	AES CS	61	62	D1 AD0	107-64. 101-62
107-63. 101-63	D1 AD1	63	64	D1 AD2	107-66. 101-64
107-65. 101-65	D1 AD3	65	66	D1 AD4	107-68. 101-66
107-67. 101-67	D1 AD5	67	68	D1 AD6	107-70. 101-68
107-69. 101-69	D1 AD7	69	70	D1 CS	107-72
107-71. 101-71	D1 A8	71	72	D1 A9	107-74. 101-72
107-73. 101-73	D1 ASTB	73	74	D1 RD	107-76. 107-74
107-75. 101-75	D1 WR	75	76	D1 C STS CHG	101-76
	N.C	77	78	N.C	
	N.C	79	80	N.C	
	N.C	81	82	N.C	
	N.C	83	84	L:JC RESET	112-68. 107-50
	UNREG -12V	85	86	UNREG -12V	
	UNREG -12V	87	88	UNREG -12V	
	UNREG -5V	89	90	UNREG -5V	
	UNREG -5V	91	92	UNREG -5V	
	UNREG +12V	93	94	UNREG +12V	
	UNREG +12V	95	96	UNREG +12V	
	GND	97	98	GND	
	GND	99	100	GND	

SDI-26 — CN105

		CN105			
109-70. 102-11	SDI A DT1/2	1	2	SDI A DT3/4	109-71. 102-10
	N.C	3	4	SDI A BCK	109-72. 102-12
109-73. 102-15	SDI A LRCK	5	6	SDI A 128FS	107-74. 102-14
	N.C	7	8	AES IN DT1/2	102-16
102-19	AES IN BCK1/2	9	10	AES IN LRCK1/2	102-18
	N.C	11	12	AES IN ERR1/2	102-20
102-23	AES IN 256FS1/2	13	14	AES IN DT3/4	102-22
	N.C	15	16	AES IN LRCK3/4	102-24
102-27	AES IN BCK3/4	17	18	AES IN ERR3/4	102-26
	N.C	19	20	AES IN 256FS3/4	105-21. 102-28
105-20. 102-28	AES IN 256FS3/4	21	22	N.C	
	N.C	23	24	N.C	
	N.C	25	26	N.C	
	N.C	27	28	N.C	
	GND	29	30	IENPV-R	108-23
108-24	IENPA-R	31	32	TRCK3-R	108-27
	N.C	33	34	N.C	
	N.C	35	36	N.C	
	N.C	37	38	N.C	
	N.C	39	40	N.C	
	N.C	41	42	N.C	
	N.C	43	44	N.C	
	N.C	45	46	N.C	
	N.C	47	48	N.C	
	N.C	49	50	QSDI XEN	108-36
108-35	BUPQS	51	52	QSDT0-R	108-38
	GND	53	54	QSDT1-R	108-39
108-40	QSDT2-R	55	56	QSDT3-R	108-41
	GND	57	58	QSDT4-R	108-42
108-43	QSDT5-R	59	60	QSDT6-R	108-44
	GND	61	62	QSDT7-R	108-46
108-47	QSDT8-R	63	64	QSDT9-R	108-48
	GND	65	66	QSDT10-R	108-50
108-51	QSDT11-R	67	68	QSDT12-R	108-52
	GND	69	70	QSDT13-R	108-53
108-54	QSDT14-R	71	72	QSDT15-R	108-55
	GND	73	74	SFDT0	108-59
108-60	SFDT1	75	76	SFDT2	108-61
	GND	77	78	SFDT3	108-62
108-64	SFDT4	79	80	SFDT5	108-65
	GND	81	82	SFDT6	108-66
108-67	SFDT7	83	84	SFDT8	108-68
	GND	85	86	SFDT9	108-69
108-70	SFDT10	87	88	SFDT11	108-72
	GND	89	90	SFDT12	108-73
108-74	SFDT13	91	92	SFDT14	108-75
	GND	93	94	SFDT15	108-76
108-78	IENPV-P	95	96	IENPA-P	108-79
	GND	97	98	N.C	
108-80	TRCK3-P	99	100	GND	

*

REF NO	CHANGED INFORMATION	LOT NO
C2. 3	47 → 47 16V	701-

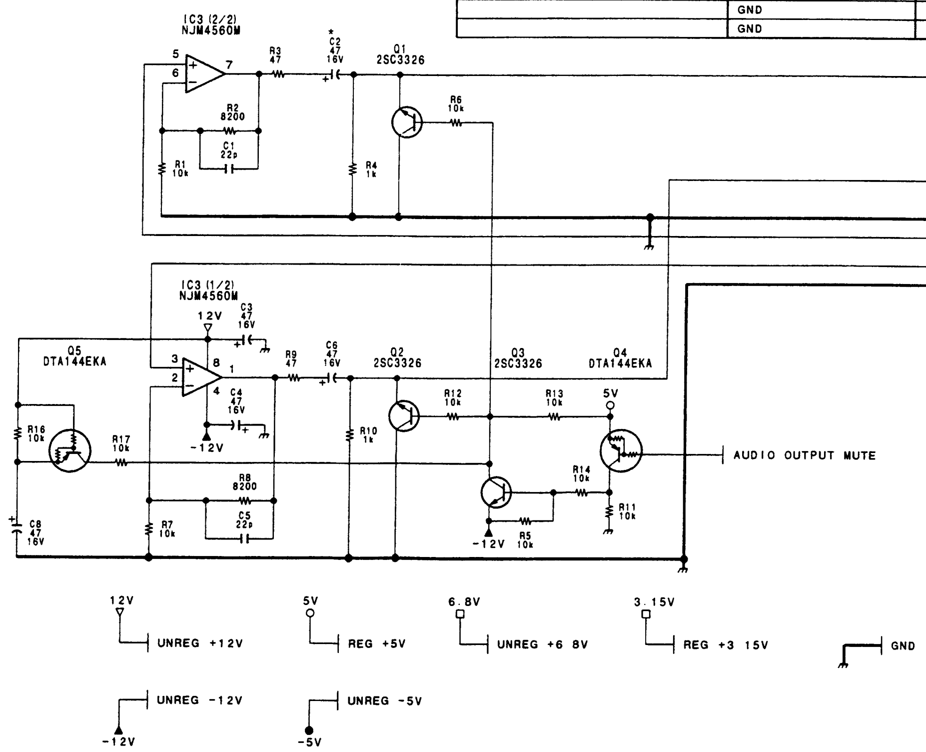

HP-73 — CN701

CN701		
1	HEADPHONE CH-1 OUT (X)	
2	HEADPHONE CH-1 OUT (G)	
3	HEADPHONE CH-2 OUT (X)	
4	HEADPHONE CH-2 OUT (G)	
5	HEADPHONE CH-1 RET VR (X)	
6	HEADPHONE VR (G)	701-8. 701-10. 701-12. 103-41
7	HEADPHONE CH-1 VR (X)	103-40
8	HEADPHONE VR (G)	701-6. 701-10. 701-12. 103-41
9	HEADPHONE CH-2 VR (X)	103-42
10	HEADPHONE VR (G)	701-6. 701-8. 701-12. 103-41
11	HEADPHONE CH-2 RET VR (X)	
12	HEADPHONE VR (G)	701-6. 701-8. 701-10. 103-41

KY-336 — CN702

CN702		
1	N.C	
2	AUDIO CH-1 VR (G)	605-2
3	AUDIO CH-1 VR RET (X)	103-55
4	AUDIO CH-1 VR RET (Y)	103-56
5	AUDIO CH-1 VR (X)	605-1
6	AUDIO CH-2 VR (G)	605-4
7	AUDIO CH-2 VR RET (X)	103-62
8	AUDIO CH-2 VR RET (Y)	103-63
9	AUDIO CH-2 VR (X)	605-3
10	AUDIO CH-3 VR (G)	605-6
11	AUDIO CH-3 VR RET (X)	103-71
12	AUDIO CH-3 VR RET (Y)	103-72
13	AUDIO CH-3 VR (X)	605-5
14	AUDIO CH-4 VR (G)	605-8
15	AUDIO CH-4 VR RET (X)	103-78
16	AUDIO CH-4 VR RET (Y)	103-79
17	AUDIO CH-4 VR (X)	605-7
18	L:CPU RESET	109-84. 106-76. 111-83. 113-80
19	L:KY CS	113-26
20	SY SO1	109-77. 106-71. 111-74. 113-75
21	SY SI1	109-80. 106-72. 111-75. 113-76
22	SY SCK1	109-78. 106-70. 111-73. 113-74
23	N.C	
24	MIC GND	506-32
25	MIC SCK	506-33
26	MIC SDA	506-34
27	MIC VCC	506-35
28	LOCAL SYNC PHASE ADJ	111-81
29	LOCAL SC PHASE ADJ	111-82
30	REG +5V	
31	REG +5V	
32	UNREG +12V	
33	UNREG +12V	
34	GND	
35	GND	
36	UNREG -12V	

SONY-SP0754 / DRUCK 468

DSR-80/80P

SDI-26

CN106

	N.C	1	2	N.C	
	N.C	3	4	GND	
	GND	5	6	N.C	
	N.C	7	8	QSDA DATA	103-4
	GND	9	10	QSDA START	103-6
103-7	QSDA FRAME	11	12	N.C	
	GND	13	14	N.C	
	N.C	15	16	N.C	
	GND	17	18	N.C	
	N.C	19	20	N.C	
	GND	21	22	N.C	
	N.C	23	24	N.C	
	GND	25	26	N.C	
	N.C	27	28	GND	
	GND	29	30	N.C	
	N.C	31	32	N.C	
	N.C	33	34	N.C	
	N.C	35	36	QSDI-P MUTE	113-37
	N.C	37	38	N.C	
111-49	PB CK27-2 (G)	39	40	PB CK27-2 (X)	111-51
	N.C	41	42	N.C	
	N.C	43	44	REF OE	109-47. 111-58
	N.C	45	46	N.C	
109-51. 111-62. 113-15	REF HD	47	48	GND	
	N.C	49	50	N.C	
	N.C	51	52	GND	
109-56. 113-30	SP SI1	53	54	SP SO1	109-57. 113-31
109-58. 113-32	SP SCK1	55	56	N.C	
	N.C	57	58	N.C	
113-39	QSDI-P CS	59	60	N.C	
	N.C	61	62	N.C	
113-45	L:QSDI INPUT EN	63	64	L:QSDI OP CS	109-76. 113-46
	N.C	65	66	N.C	
	N.C	67	68	N.C	
	N.C	69	70	SY SCK1	702-22. 109-78. 111-73. 111-74
702-20. 109-77. 111-74. 113-75	SY SO1	71	72	SY SI1	702-21. 109-80. 111-75. 113-76
	N.C	73	74	N.C	
	N.C	75	76	L:CPU RESET	702-18. 109-84. 111-83. 113-80
109-83. 113-82	L:QSDI OP EXIST	77	78	N.C	
	N.C	79	80	N.C	
	N.C	81	82	N.C	
	N.C	83	84	N.C	
	REG +3.15V	85	86	REG +3.15V	
	REG +3.15V	87	88	REG +3.15V	
	REG +5V	89	90	REG +5V	
	REG +5V	91	92	REG +5V	
	UNREG +6.8V	93	94	UNREG +6.8V	
	UNREG +6.8V	95	96	UNREG +6.8V	
	GND	97	98	GND	
	GND	99	100	GND	

C7 NM R15 NM

SY-241

CN112

601-10	EXT LTC OUTPUT	1	2	EXT LTC GND	601-9
601-8	EXT LTC INPUT	3	4	L:INPUT RGB	602-1
603-1	L:OUTPUT RGB	5	6	RM TX (+)	608-7
608-2	RM TX (-)	7	8	RM RX (+)	608-3
608-8	RM RX (-)	9	10	AUDIO OUTPUT MUTE	101-41. 104-41
101-42	AUDIO RC-P1 MUTE	11	12	AUDIO RC-P2 MUTE	101-43
101-44	AUDIO PB RESET	13	14	AUD SFY CS	101-45
114-11	SV D15	15	16	SV D14	114-12
114-15	1/2 VD	17	18	SV D13	114-13
114-14	SV D12	19	20	SV D11	114-16
114-19	REF 150	21	22	SV D10	114-17
114-18	SV D9	23	24	SV D8	114-20
114-23	H:NTSC/L:PAL	25	26	SV A10	114-21
114-22	SV A9	27	28	SV A8	114-24
114-25	SV A7	29	30	SV A6	114-26
114-27	SV A5	31	32	SV A4	114-28
114-77	H:RECORDER	33	34	SV A3	114-30
114-31	SV A2	35	36	SV A1	114-32
	GND	37	38	SV HWR	114-35
114-34	SV A0	39	40	SV RD	114-36
114-37	SV CLOCK (G)	41	42	SY RAM WAIT	114-38
114-39	SY RAM CS	43	44	SV CLOCK (X)	114-40
107-54	SFY-R MS CS	45	46	L:CPU RESET2	114-42
101-46	AUD JOG CS	47	48	AUD-P1 CS	101-47
	N.C	49	50	AUD-P2 CS	101-48
101-49	FS CONT-P CS	51	52	DSP-P1 CS	101-50
101-51	DSP-P2 CS	53	54	DSP-P1 XLAT	101-52
101-53	DSP-P2 XLAT	55	56	L:DSP-P1 MUTE	101-54
101-55	L:DSP-P2 MUTE	57	58	SP SCK0	101-56
101-57	SP SO0	59	60	SP SI0	101-58
101-59	DSP-P READY	61	62	FLTT1-R	107-11. 104-23. 114-9. 101-33
114-7. 107-14. 116-48	FLTT1-P	63	64	FLTT0-P	107-47
114-6. 107-10. 116-47	TRKT-P	65	66	SFY-P BANK	107-49. 115-53
115-61	FRAME PULSE	67	68	L:JC RESET	107-50. 104-84
107-51. 104-56	SP SCK-S1	69	70	SP SO-S1	107-52. 104-58
107-53. 104-59	SP SI-S1	71	72	QSDI-R CS	104-60
107-55	L:CTLG RESET	73	74	SFY-R SP CS	107-56
107-57	NFIL-R CS	75	76	V1-R CS	107-58
107-59	CC-DECODER CS	77	78	VRAM-R WE	107-60
107-62	SFY-R BANK	79	80	REF CF PULSE	111-76. 115-17
	UNREG +15V	81	82	UNREG +15V	
	UNREG +15V	83	84	UNREG +15V	
	UNREG -12V	85	86	UNREG -12V	
	UNREG -12V	87	88	UNREG -12V	
	UNREG -5V	89	90	UNREG -5V	
	UNREG -5V	91	92	UNREG -5V	
	UNREG +12V	93	94	UNREG +12V	
	UNREG +12V	95	96	UNREG +12V	
	GND	97	98	GND	
	GND	99	100	GND	

CN607

1	RM SYNC PHASE ADJ	110-40
2	RM HUE ADJ	110-39
3	RM SC PHASE ADJ	110-41
4	RM VIDEO LEVEL ADJ	110-35
5	RM SETUP LEVEL ADJ	110-36
6	RM CHROMA LEVEL ADJ	110-37
7	REMOTE REG -9V	
8	GND	
9	GND	
10	N.C	
11	N.C	
12	N.C	
13	RM Y/C DELAY ADJ	110-38
14	N.C	
15	REMOTE REG +9V	

CN608

1	GND	
2	RM TX (-)	112-7
3	RM RX (+)	112-8
4	GND	
5	N.C	
6	GND	
7	RM TX (+)	112-6
8	RM RX (-)	112-9
9	GND	

CN609

1	UNREG +12V	
2	FAN MOTOR STOP	114-29
3	GND	

CN703

1	REG +3.15V
2	REG +5V
3	UNREG +6.8V
4	UNREG +12V
5	UNREG -12V
6	UNREG +15V
7	UNREG -15V
8	UNREG -5V
9	GND
10	GND

CN903

1	REG +5V
2	REG +5V
3	REG +3.15V
4	REG +3.15V
5	UNREG -5V
6	GND
7	GND
8	GND

CN904

1	UNREG +12V
2	UNREG -12V
3	UNREG +6.8V
4	GND
5	UNREG +15V
6	UNREG -15V

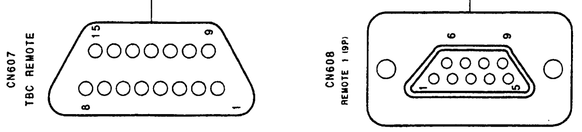

MB-712 (2/6)

BOARD SUFFIX : -11, 12
MODEL DSR-80/80P

MB-712 (3/6): MOTHER BOARD

 DSR-80/80P

SY-241

	CN113				
	N.C	1	2	SY SI2	109-1
109-2	SY SO2	3	4	SY SCK2	109-3
	N.C	5	6	CTLG-P MOD CS	109-4
109-5	CTLG-P SP CS	7	8	CTLG SUB-P CS	109-6
	N.C	9	10	CTLG-R MOD CS	109-7
109-8	CTLG-R SP CS	11	12	N.C	
109-50, 111-57	RF OE	13	14	REF VD	111-61
109-51, 106-47, 111-62	REF HD	15	16	H:WIDE DC	111-64
111-66	INPUT WIDE DET	17	18	CHARACTER FRAME	111-67
111-68	CHARACTER SIG	19	20	L:TBC CPU CS	111-70
	N.C	21	22	L:MAINTE MODE	111-71
111-72	INPUT LTB DET	23	24	CC-F1	109-53
	N.C	25	26	L:KY CS	702-19
	N.C	27	28	L:SDI OUT OP CS	109-55
	N.C	29	30	SP SI1	109-56, 106-53
109-57, 106-54	SP SO1	31	32	SP SCK1	109-58, 106-55
109-63	SFY-P MS CS	33	34	SFY-P SP CS	109-59
109-60	NFIL-P CS	35	36	V1-P CS	109-61
106-36	QSDI-P MUTE	37	38	JUST-P CS	109-62
106-59	QSDI-P CS	39	40	VRAM-P WE	109-64
	N.C	41	42	N.C	
	N.C	43	44	CC-F2	109-67
106-63	L:QSDI INPUT EN	45	46	L:QSDI OP CS	109-76, 106-64
109-68	FLTT0-R	47	48	QSDI CORE R1 CS	103-13
103-12	QSDI CORE R2 CS	49	50	AUD EDIT CS	103-14
103-15	FS CONT QSDI CS	51	52	AUD-R1 CS	103-16
103-19	EDIT PLD CS	53	54	AUD-R2 CS	103-18
109-66	TRKT-R2	55	56	DSP-R READY	103-20
103-17	L:FLTA ERR	57	58	FS CONT-R CS	103-22
103-23	DSP-R1 CS	59	60	DSP-R2 CS	103-24
103-25	L:DSP-R1 MUTE	61	62	DSP-R1 XLAT	103-26
103-27	DSP-R2 XLAT	63	64	SP SI-S2	103-28
103-29	L:DSP-R2 MUTE	65	66	SP SCK-S2	103-30
103-31	SP SO-S2	67	68	N.C	
103-33	DA-P1 XLAT	69	70	N.C	
103-35	RC-P1 XLAT	71	72	RC-P2 XLAT	103-36
103-37	DA-P2 XLAT	73	74	SY SCK1	702-22, 109-78, 106-70, 111-73
702-20, 109-77, 106-71, 111-74	SY SO1	75	76	SY SI1	702-21, 109-80, 106-72, 111-75
103-38	DA ID	77	78	L:SDI IN OP EXIST	109-82
109-81	L:SDI OUT OP EXIST	79	80	L:CPU RESET	702-18, 109-84, 106-76, 111-83
	N.C	81	82	L:QSDI OP EXIST	109-83, 106-77
	N.C	83	84	GND	
	REG +3.15V	85	86	REG +3.15V	
	REG +3.15V	87	88	REG +3.15V	
	REG +5V	89	90	REG +5V	
	REG +5V	91	92	REG +5V	
	UNREG +6.8V	93	94	UNREG +6.8V	
	UNREG +6.8V	95	96	UNREG +6.8V	
	GND	97	98	GND	
	GND	99	100	GND	

SV-184

	CN114				
107-3	LVD	1	2	N.C	
107-5	SDI CFP2	3	4	SDI CFP1	107-4
107-7	SDI CFP0	5	6	TRKT-P	112-65, 107-10, 116-47
112-63, 107-14, 116-48	FLTT1-P	7	8	TRKT-R	107-8, 104-22, 101-34
107-11, 104-23, 112-62, 101-33	FLTT1-R	9	10	N.C	
112-15	SV D15	11	12	SV D14	112-16
112-18	SV D13	13	14	SV D12	112-19
112-17	1/2 VD	15	16	SV D11	112-20
112-22	SV D10	17	18	SV D9	112-23
112-21	REF 150	19	20	SV D8	112-24
112-26	SV A10	21	22	SV A9	112-27
112-25	H:NTSC/L:PAL	23	24	SV A8	112-28
112-29	SV A7	25	26	SV A6	112-30
112-31	SV A5	27	28	SV A4	112-32
609-2	FAN MOTOR STOP	29	30	SV A3	112-34
112-35	SV A2	31	32	SV A1	112-36
	GND	33	34	SV A0	112-39
112-38	SV HWR	35	36	SV RD	112-40
112-41	SV CLOCK (G)	37	38	SY RAM WAIT	112-42
112-43	SY RAM CS	39	40	SV CLOCK (X)	112-44
110-50	H:INPUT EXIST	41	42	L:CPU RESET2	112-46
116-49	OCH ATF GAIN CONT.	43	44	OCH ATF RF CUT	116-50
116-51	L:TEST	45	46	OCH ATF ERROR (X)	116-52
116-53	OCH ATF ERROR (G)	47	48	ECH ATF GAIN CONT.	116-54
116-55	ATF SEL	49	50	ECH ATF RF CUT	116-56
116-57	ECH ATF ERROR (X)	51	52	ECH ATF ERROR (G)	116-58
116-59	L:ITI CENTER	53	54	EEPROM RP BUSY	116-60
116-61	EEPROM RP CS	55	56	EEPROM RP RESET	116-62
116-63	RP D/A LD1	57	58	RP D/A LD2	116-64
116-65	RP D/A LD3	59	60	N.C	
116-67	SV SI2	61	62	SV SO2	116-68
116-69	SV SCK2	63	64	N.C	
116-70	SV SI3	65	66	SV SO3	116-71
116-72	SV SCK3	67	68	CHCD-P1 CS	116-73
116-74	CHCD-P2 CS	69	70	CHCD-R1 CS	116-75
116-76	CHCD-R2 CS	71	72	L:CHCD RESET	116-77
116-78	PB SW REF	73	74	SUBCODE AREA	116-79
116-80	SSA 30R	75	76	REC SW REF	116-81, 108-9
112-33	H:RECORDER	77	78	FIFO-R CS	116-82
110-54	L:NON STD	79	80	ATF SW	116-83
	UNREG +6.8V	81	82	UNREG +6.8V	
	UNREG +6.8V	83	84	UNREG +6.8V	
	UNREG -12V	85	86	UNREG -12V	
	UNREG -12V	87	88	UNREG -12V	
	UNREG -5V	89	90	UNREG -5V	
	UNREG -5V	91	92	UNREG -5V	
	UNREG +12V	93	94	UNREG +12V	
	UNREG +12V	95	96	UNREG +12V	
	GND	97	98	GND	
	GND	99	100	GND	

SV-184

	CN115				
505-13	CC UP/DOWN MOTOR (+)	1	2	CC UP/DOWN MOTOR (-)	505-12
505-4	COMP.EXIST	3	4	CAPSTAN DRIVE	503-3
505-2	CAS IN1	5	6	CAS IN2	505-3
505-7	CAS IN3	7	8	PINCH SOL.VCC	503-4
505-6	CC DOWN2	9	10	CC DOWN1	505-5
503-1	CAPSTAN DIR CONT.	11	12	PINCH SOL.STARTER	503-5
111-77	H:STD/L:NON-STD	13	14	CAP BRAKE	503-2
503-7	UNTH END	15	16	PINCH SOL.HOLDER	503-6
112-80, 111-76	REF CF PULSE	17	18	TH END	503-8
503-11	DEW DET (G)	19	20	CLEANING SOL.STARTER	503-9
111-78	INPUT CF PULSE	21	22	DEW DET (X)	503-12
505-1	CC DOWN3	23	24	CLEANING SOL.VCC	503-10
103-39	JOG SPEED	25	26	TH/UNTH END LED	503-21
503-22	POSISION LED	27	28	THREADING MOTOR (+)	503-23
503-19	CLEANING SOL HOLDER	29	30	THREADING FG	503-25
503-27	DRUM FG	31	32	THREADING MOTOR (-)	503-24
	N.C	33	34	DRUM DIR CONT.	503-28
503-29	DRUM CURRENT	35	36	DRUM DRIVE	503-26
	N.C	37	38	DRUM PG	503-30
503-31	CAPSTAN FG A	39	40	T REEL MOTOR (-)	506-12
	N.C	41	42	CAPSTAN FG B	503-32
503-33	EEPROM-SV RESET	43	44	T REEL MOTOR (+)	506-13
	N.C	45	46	L:MS EXIST1	503-34
506-1	TENSION SENSOR VEE	47	48	T BRAKE SOL.HOLDER	506-14
	N.C	49	50	TENSION SENSOR (+)	506-2
506-3	TENSION SENSOR (-)	51	52	T BRAKE SOL.STARTER	506-15
107-49, 112-66	SFY-P BANK	53	54	TENSION SENSOR VCC	506-4
506-5	END SENSOR (X)	55	56	T BRAKE SOL.VCC	506-16
107-48	SFY-P TBC EN	57	58	SV SI1	506-6
506-7	SV SO1	59	60	S REEL MOTOR (+)	506-19
112-67	FRAME PULSE	61	62	SV SCK1	506-8
506-9	EEPROM-SV CS	63	64	S REEL MOTOR (-)	506-20
	N.C	65	66	EEPROM-SV BUSY	506-10
506-11	THERMO SENSOR	67	68	S BRAKE SOL.HOLDER	506-21
	N.C	69	70	T REEL FG B	506-17
506-18	T REEL FG A	71	72	S BRAKE SOL.STARTER	506-22
111-63	H:EXT SYNC MODE	73	74	S REEL FG B	506-24
506-25	S REEL FG A	75	76	S BRAKE SOL.VCC	506-23
111-65	H:EXT BURST EXIST	77	78	TOP/END LED VCC	506-29
506-28	TOP SENSOR (X)	79	80	POSITION MOTOR (-)	506-26
503-36	REC INH SW (X)	81	82	H:S POSITION	506-30
506-31	H:L POSITION	83	84	POSITION MOTOR (+)	506-27
	REG +3.15V	85	86	REG +3.15V	
	REG +3.15V	87	88	REG +3.15V	
	REG +5V	89	90	REG +5V	
	REG +5V	91	92	REG +5V	
	MECHA +12V	93	94	MECHA +12V	
	MECHA +12V	95	96	MECHA +12V	
	GND	97	98	GND	
	GND	99	100	GND	

PRE-34

	CN801				
	GND	1	2	GND	
	REG +3.15V	3	4	REG +3.15V	
	UNREG +6.8V	5	6	UNREG +6.8V	
116-41	PB-O PB CONT	7	8	PB-E PB CONT	116-42
116-40	PB-O RF (X)	9	10	PB-O RF (Y)	116-37
116-38	PB-O RF (G)	11	12	GND	116-35
116-36	PB-E RF (X)	13	14	PB-E RF (Y)	116-33
116-34	PB-E RF (G)	15	16	L:10U	116-31
116-32	SPPB-O RF (X)	17	18	SPPB-O RF (Y)	116-29
116-30	SPPB-O RF (G)	19	20	REC-O CURRENT	116-27
116-28	REC-O CLOCK	21	22	REC-O AREA	116-25

PRE-34

	CN802				
116-26	REC-O DATA	1	2	REC-O POWER SAVE	116-23
116-19	GND	3	4	SPPB-E RF (X)	116-20
116-17	SPPB-E RF (Y)	5	6	SPPB-E RF (G)	116-18
116-15	GND	7	8	REC-E CURRENT	116-16
116-13	REC-E AREA	9	10	REC-E CLOCK	116-14
116-11	REC-E DATA	11	12	REC-E POWER SAVE	116-12
	GND	13	14	GND	
	UNREG -5V	15	16	UNREG -5V	
	UNREG +6.8V	17	18	UNREG +6.8V	
116-3	ERASE CURRENT	19	20	ERASE CONT	116-4
116-1	ERASE (G)	21	22	ERASE (X)	116-2

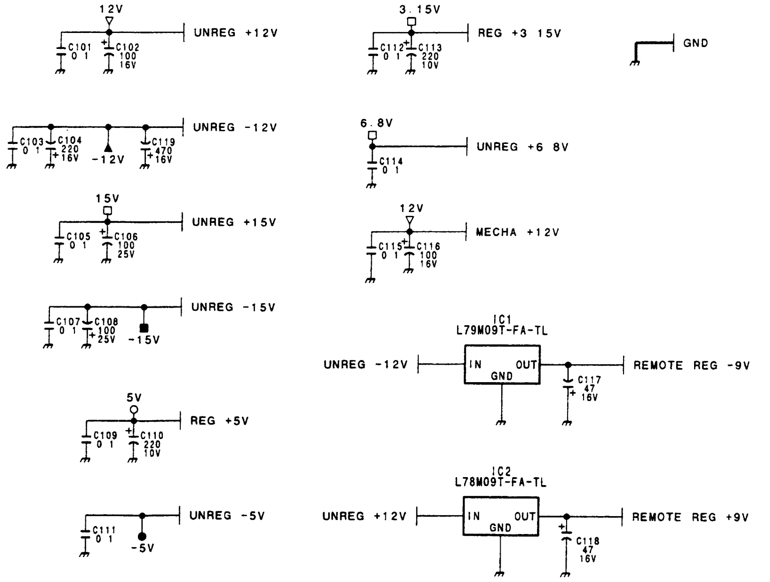

*

REF NO.	CHANGED INFORMATION	LOT NO.
C104	100→220 16V	701-
C119	ADDED	

A B C D E F G H

SONY-SP0754 / DRUCK 470

DSR-80/80P

1

RP-101

	CN116				
802-21	ERASE (G)	1	2	ERASE (X)	802-22
802-19	ERASE CURRENT	3	4	ERASE CONT	802-20
	GND	5	6	GND	
	GND	7	8	GND	
	GND	9	10	GND	
802-11	REC-E DATA	11	12	REC-E POWER SAVE	802-12
802-9	REC-E AREA	13	14	REC-E CLOCK	802-10
802-7	GND	15	16	REC-E CURRENT	802-8
802-5	SPPB-E RF (Y)	17	18	SPPB-E RF (G)	802-6
	GND	19	20	SPPB-E RF (X)	802-4
	N.C	21	22	N.C	
802-2	REC-O POWER SAVE	23	24	GND	
801-22	REC-O AREA	25	26	REC-O DATA	802-1
801-20	REC-O CURRENT	27	28	REC-O CLOCK	801-21
801-18	SPPB-O RF (Y)	29	30	SPPB-O RF (G)	801-19
801-16. 108-28	L:10U	31	32	SPPB-O RF (X)	801-17
801-14	PB-E RF (Y)	33	34	PB-E RF (G)	801-15
	GND	35	36	PB-E RF (X)	801-13
801-10	PB-O RF (Y)	37	38	PB-O RF (G)	801-11
	GND	39	40	PB-O RF (X)	801-9
801-7	PB-O PB CONT	41	42	PB-E PB CONT	801-8
	GND	43	44	GND	
	N.C	45	46	N.C	
112-65. 114-6. 107-10	TRKT-P	47	48	FLTT1-P	112-63. 114-7. 107-14
114-43	OCH ATF GAIN CONT.	49	50	OCH ATF RF CUT	114-44
114-45	L:TEST	51	52	OCH ATF ERROR (X)	114-46
114-47	OCH ATF ERROR (G)	53	54	ECH ATF GAIN CONT.	114-48
114-49	ATF SEL	55	56	ECH ATF RF CUT	114-50
114-51	ECH ATF ERROR (X)	57	58	ECH ATF ERROR (G)	114-52
114-53	L:ITI CENTER	59	60	EEPROM RP BUSY	114-54
114-55	EEPROM RP CS	61	62	EEPROM RP RESET	114-56
114-57	RP D/A LD1	63	64	RP D/A LD2	114-58
114-59	RP D/A LD3	65	66	N.C	
114-61	SV SI2	67	68	SV SO2	114-62
114-63	SV SCK2	69	70	SV SI3	114-65
114-66	SV SO3	71	72	SV SCK3	114-67
114-68	CHCD-P1 CS	73	74	CHCD-P2 CS	114-69
114-70	CHCD-R1 CS	75	76	CHCD-R2 CS	114-71
114-72	L:CHCD RESET	77	78	PB SW REF	114-73
114-74	SUBCODE AREA	79	80	SSA 30R	114-75
114-76. 108-9	REC SW REF	81	82	FIFO-R CS	114-78
114-80	ATF SW	83	84	R-VAR FRP	107-2
107-1	P-VAR FRP	85	86	N.C	
	GND	87	88	GND	
	GND	89	90	GND	
	GND	91	92	GND	
108-10	DTSC0	93	94	DTSC1	108-11
108-12	DTSC2	95	96	DTSC3	108-13
108-14	DTSC4	97	98	DTSC5	108-15
108-16	DTSC6	99	100	DTSC7	108-17
108-18	FRPSC-R	101	102	TRPSC-R	108-19
108-20	DRCKREF	103	104	13.5MHZ	108-21
108-22	VRCKCS-R	105	106	VRCKCS-P	108-87
	N.C	107	108	FRPSC-P	108-86
108-85	TRPSC-P	109	110	SYCS	108-89. 102-50
108-90	SCDVCS	111	112	VADVCS	108-91. 102-51
108-92. 102-52	VPCKCS	113	114	GND	
108-93. 102-54	DTCS0	115	116	DTCS1	108-94. 102-55
108-95. 102-56	DTCS2	117	118	DTCS3	108-96. 102-58
108-97. 102-59	DTCS4	119	120	DTCS5	108-98. 102-60
108-99. 102-62	DTCS6	121	122	DTCS7	108-100. 102-63
	GND	123	124	GND	
	GND	125	126	GND	
	REG +3.15V	127	128	REG +5V	
	REG +3.15V	129	130	REG +5V	
	UNREG -5V	131	132	UNREG +6.8V	
	UNREG -5V	133	134	UNREG +6.8V	
	UNREG -12V	135	136	UNREG +12V	
	UNREG -12V	137	138	UNREG +12V	
	GND	139	140	GND	
	GND	141	142	GND	
	GND	143	144	GND	
	GND	145	146	GND	
	GND	147	148	GND	

DA-119

	CN101				
606-10	AUDIO CH-4 OUTPUT (G)	1	2	AUDIO CH-4 OUTPUT (Y)	606-11
606-12	AUDIO CH-4 OUTPUT (X)	3	4	AUDIO CH-3 OUTPUT (Y)	606-8
606-9	AUDIO CH-3 OUTPUT (X)	5	6	AUDIO CH-3 OUTPUT (G)	606-7
606-4	AUDIO CH-2 OUTPUT (G)	7	8	AUDIO CH-2 OUTPUT (Y)	606-6
606-6	AUDIO CH-2 OUTPUT (X)	9	10	AUDIO CH-1 OUTPUT (Y)	606-3
606-3	AUDIO CH-1 OUTPUT (X)	11	12	AUDIO CH-1 OUTPUT (G)	606-1
602-8	AUDIO MONI. OUTPUT (X)	13	14	AUDIO MONI. OUTPUT (G)	602-9
	N.C	15	16	N.C	
	N.C	17	18	N.C	
	N.C	19	20	N.C	
	N.C	21	22	N.C	
	N.C	23	24	N.C	
	N.C	25	26	N.C	
	N.C	27	28	N.C	
	N.C	29	30	N.C	
104-20. 107-9	FLTT1-P2	31	32	TRKT-P2	104-19. 107-6
107-11. 104-23. 112-62. 114-9	FLTT1-R	33	34	TRKT-R	107-8. 104-22. 114-8
	N.C	35	36	FLTA-R	107-12. 104-24
	N.C	37	38	SPCK3-R	107-22
	N.C	39	40	N.C	
104-41. 112-10	AUDIO OUTPUT MUTE	41	42	AUDIO RC-P1 MUTE	112-11
112-12	AUDIO RC-P2 MUTE	43	44	AUDIO PB RESET	112-13
112-14	AUD SFY CS	45	46	AUD JOG CS	112-47
112-48	AUD-P1 CS	47	48	AUD-P2 CS	112-50
112-51	FS CONT-P CS	49	50	DSP-P1 CS	112-52
112-53	DSP-P2 CS	51	52	DSP-P1 XLAT	112-54
112-55	DSP-P2 XLAT	53	54	L:DSP-P1 MUTE	112-56
112-57	L:DSP-P2 MUTE	55	56	SP SCK0	112-58
112-59	SP SO0	57	58	SP SI0	112-60
112-61	DSP-P READY	59	60	N.C	
	GND	61	62	D1 AD0	107-64. 104-62
107-63. 104-63	D1 AD1	63	64	D1 AD2	107-66. 104-64
107-65. 104-65	D1 AD3	65	66	D1 AD4	107-68. 104-66
107-67. 104-67	D1 AD5	67	68	D1 AD6	107-70. 104-68
107-69. 104-69	D1 AD7	69	70	AES CS	104-61
107-71. 104-71	D1 A8	71	72	D1 A9	107-74. 104-72
107-73. 104-73	D1 ASTB	73	74	D1 RD	107-76. 104-74
107-75. 104-75	D1 WR	75	76	D1 C STS CHG	104-76
	UNREG -15V	77	78	UNREG -15V	
	UNREG -15V	79	80	UNREG -15V	
	UNREG +15V	81	82	UNREG +15V	
	UNREG +15V	83	84	UNREG +15V	
	UNREG -12V	85	86	UNREG -12V	
	UNREG -12V	87	88	UNREG -12V	
	UNREG -5V	89	90	UNREG -5V	
	UNREG -5V	91	92	UNREG -5V	
	UNREG +12V	93	94	UNREG +12V	
	UNREG +12V	95	96	UNREG +12V	
	GND	97	98	GND	
	GND	99	100	GND	

2

3

4

5

MB-712 (3/6)
BOARD SUFFIX : -11, 12
MODEL DSR-80/80P

SONY-SP0754 / DRUCK 472

MB-712 (4/6): MOTHER BOARD

DSR-80/80P

1

2

3

4

5

DA-119

	CN102				
107-78	SDIA REC DT1/2	1	2	SDIA REC DT3/4	107-79
107-81	SDIA REC BCK	3	4	SDIA REC LRCK	107-80
	GND	5	6	SDIA REC 256FS	107-82
107-84	SDIA REC ERR2	7	8	SDIA REC ERR1	107-83
	GND	9	10	SDI A DT3/4	109-71. 105-2
109-70. 105-1	SDI A DT1/2	11	12	SDI A BCK	109-72. 105-4
	GND	13	14	SDI A 128FS	109-74. 105-6
109-73. 105-5	SDI A LRCK	15	16	AES IN DT1/2	105-8
	GND	17	18	AES IN LRCK1/2	105-10
105-9	AES IN BCK1/2	19	20	AES IN ERR1/2	105-12
	N.C	21	22	AES IN DT3/4	105-14
105-13	AES IN 256FS1/2	23	24	AES IN LRCK3/4	105-16
	N.C	25	26	AES IN ERR3/4	105-18
105-17	AES IN BCK3/4	27	28	AES IN 256FS3/4	105-20. 105-21
	GND	29	30	GND	
	N.C	31	32	TRCK4-R	108-25
	GND	33	34	AUEN-R	108-29
108-30	ADTO-R	35	36	SADT-R	108-31
	GND	37	38	START-R	108-33
	N.C	39	40	N.C	
		41	42		
	N.C	43	44	TRCK4-P	108-82
	N.C	45	46	N.C	
108-81	SADT-P	47	48	START-P	108-83
	GND	49	50	SYCS	116-110. 108-89
116-112 108-91	VADVCS	51	52	VPCKCS	116-113. 108-92
	GND	53	54	DTCS0	116-115. 108-93
116-116. 108-94	DTCS1	55	56	DTCS2	116-117. 108-95
	GND	57	58	DTCS3	116-118. 108-96
116-119. 108-97	DTCS4	59	60	DTCS5	116-120. 108-98
	GND	61	62	DTCS6	116-121. 108-99
116-122. 108-100	DTCS7	63	64	GND	
	N.C	65	66	N.C	
	N.C	67	68	N.C	
	N.C	69	70	N.C	
	N.C	71	72	N.C	
	N.C	73	74	N.C	
	N.C	75	76	N.C	
	N.C	77	78	N.C	
	N.C	79	80	N.C	
	N.C	81	82	N.C	
	N.C	83	84	N.C	
	N.C	85	86	N.C	
	N.C	87	88	N.C	
	N.C	89	90	N.C	
	N.C	91	92	N.C	
	N.C	93	94	N.C	
	N.C	95	96	N.C	
	N.C	97	98	N.C	
	N.C	99	100	N.C	

DA-119

	CN103				
	GND	1	2	GND	
	N.C	3	4	QSDA DATA	106-8
	GND	5	6	QSDA START	106-10
106-11	QSDA FRAME	7	8	N.C	
	GND	9	10	N.C	
	N.C	11	12	QSDI CORE R2 CS	113-49
113-48	QSDI CORE R1 CS	13	14	AUD EDIT CS	113-50
113-51	FS CONT QSDI CS	15	16	AUD-R1 CS	113-52
113-57	L:FLTA ERR	17	18	AUD-R2 CS	113-54
113-53	EDIT PLD CS	19	20	DSP-R READY	113-56
	N.C	21	22	FS CONT-R CS	113-58
113-59	DSP-R1 CS	23	24	DSP-R2 CS	113-60
113-61	L:DSP-R1 MUTE	25	26	DSP-R1 XLAT	113-62
113-63	DSP-R2 XLAT	27	28	SP SI-S2	113-64
113-65	L:DSP-R2 MUTE	29	30	SP SCK-S2	113-66
113-67	SP SO-S2	31	32	N.C	
113-69	DA-P1 XLAT	33	34	N.C	
113-71	RC-P1 XLAT	35	36	RC-P2 XLAT	113-72
113-73	DA-P2 XLAT	37	38	DA ID	113-77
115-25	JOG SPEED	39	40	HEADPHONE CH-1 VR (X)	701-7
701-6. 701-8. 701-10. 701-12	HEADPHONE VR (G)	41	42	HEADPHONE CH-2 VR (X)	701-9
	N.C	43	44	N.C	
	N.C	45	46	SPCK3-P	109-39
	N.C	47	48	N.C	
	N.C	49	50	N.C	
	N.C	51	52	N.C	
	N.C	53	54	N.C	
702-3	AUDIO CH-1 VR RET (X)	55	56	AUDIO CH-1 VR RET (Y)	702-4
	GND	57	58	N.C	
	N.C	59	60	N.C	
	GND	61	62	N.C	
702-7	AUDIO CH-2 VR RET (X)	63	64	AUDIO CH-2 VR RET (Y)	702-8
	GND	65	66	N.C	
	N.C	67	68	N.C	
	GND	69	70	N.C	
702-11	AUDIO CH-3 VR RET (X)	71	72	AUDIO CH-3 VR RET (Y)	702-12
	GND	73	74	N.C	
	GND	75	76	N.C	
	GND	77	78	N.C	
702-15	AUDIO CH-4 VR RET (X)	79	80	AUDIO CH-4 VR RET (Y)	702-16
	GND	81	82	N.C	
	N.C	83	84	N.C	
	REG +3.15V	85	86	REG +3.15V	
	REG +3.15V	87	88	REG +3.15V	
	REG +5V	89	90	REG +5V	
	REG +5V	91	92	REG +5V	
	UNREG +6.8V	93	94	UNREG +6.8V	
	UNREG +6.8V	95	96	UNREG +6.8V	
	GND	97	98	GND	
	GND	99	100	GND	

MB-712 (4/6)
BOARD SUFFIX : -11, 12
MODEL DSR-80/80P

MB-712 (5/6): MOTHER BOARD

DSR-80/80P

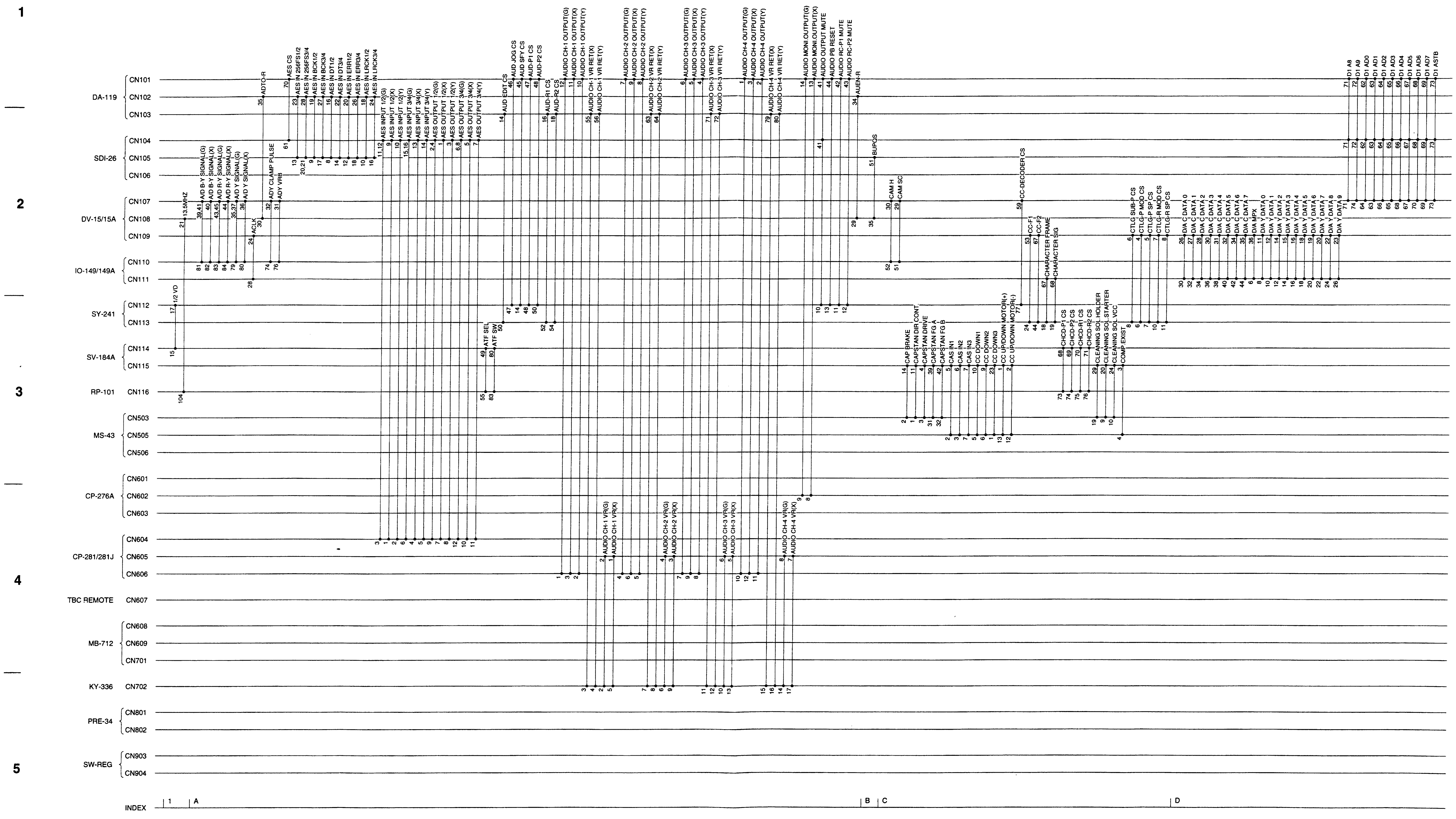

A | B | C | D | E | F | G | H

SONY-SP0754 / DRUCK 474

1

2

3

4

5

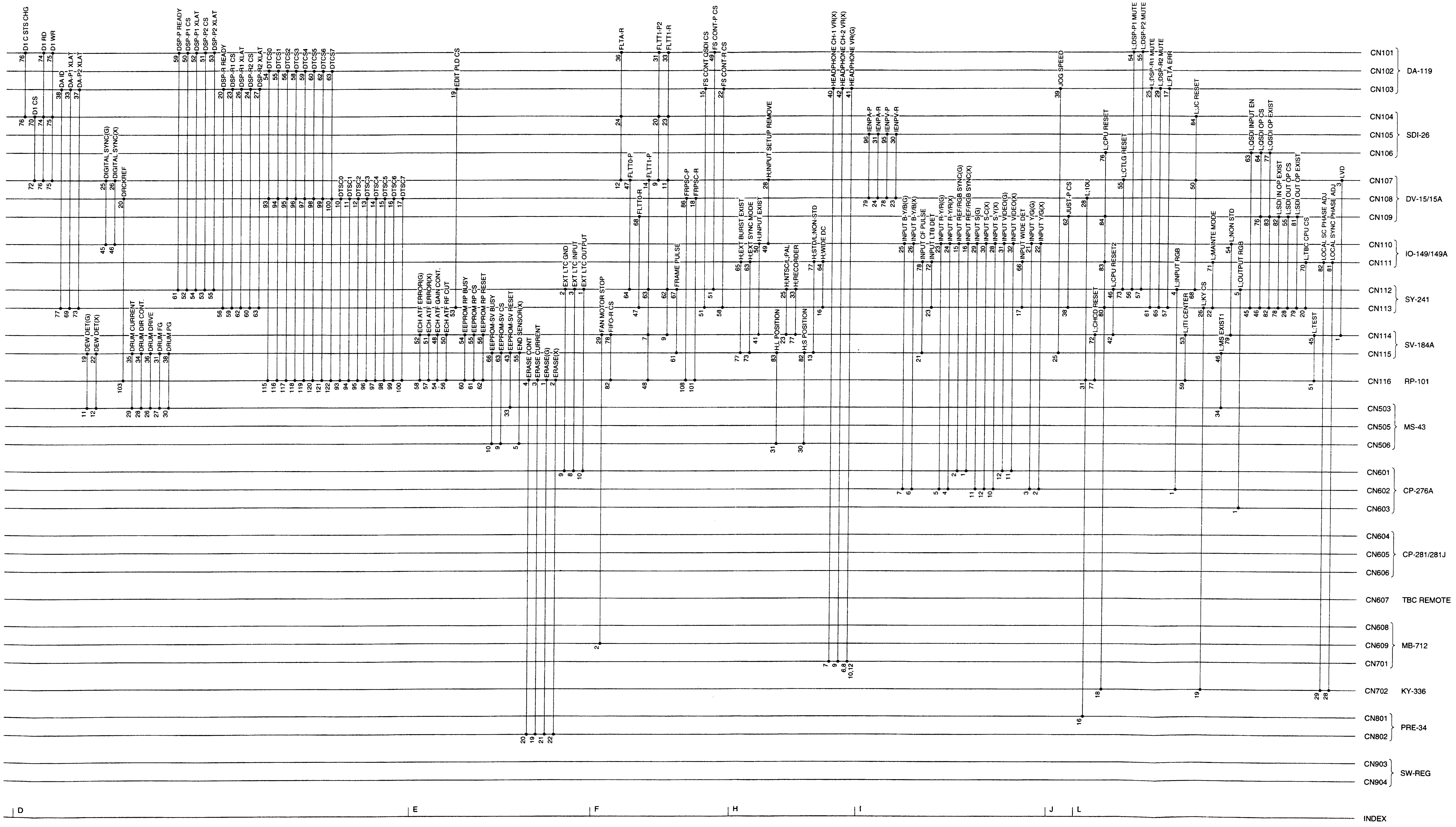

MB-712 (5/6)

BOARD SUFFIX : -11, 12
MODEL DSR-80/80P

MB-712 (6/6): MOTHER BOARD

DSR-80/80P

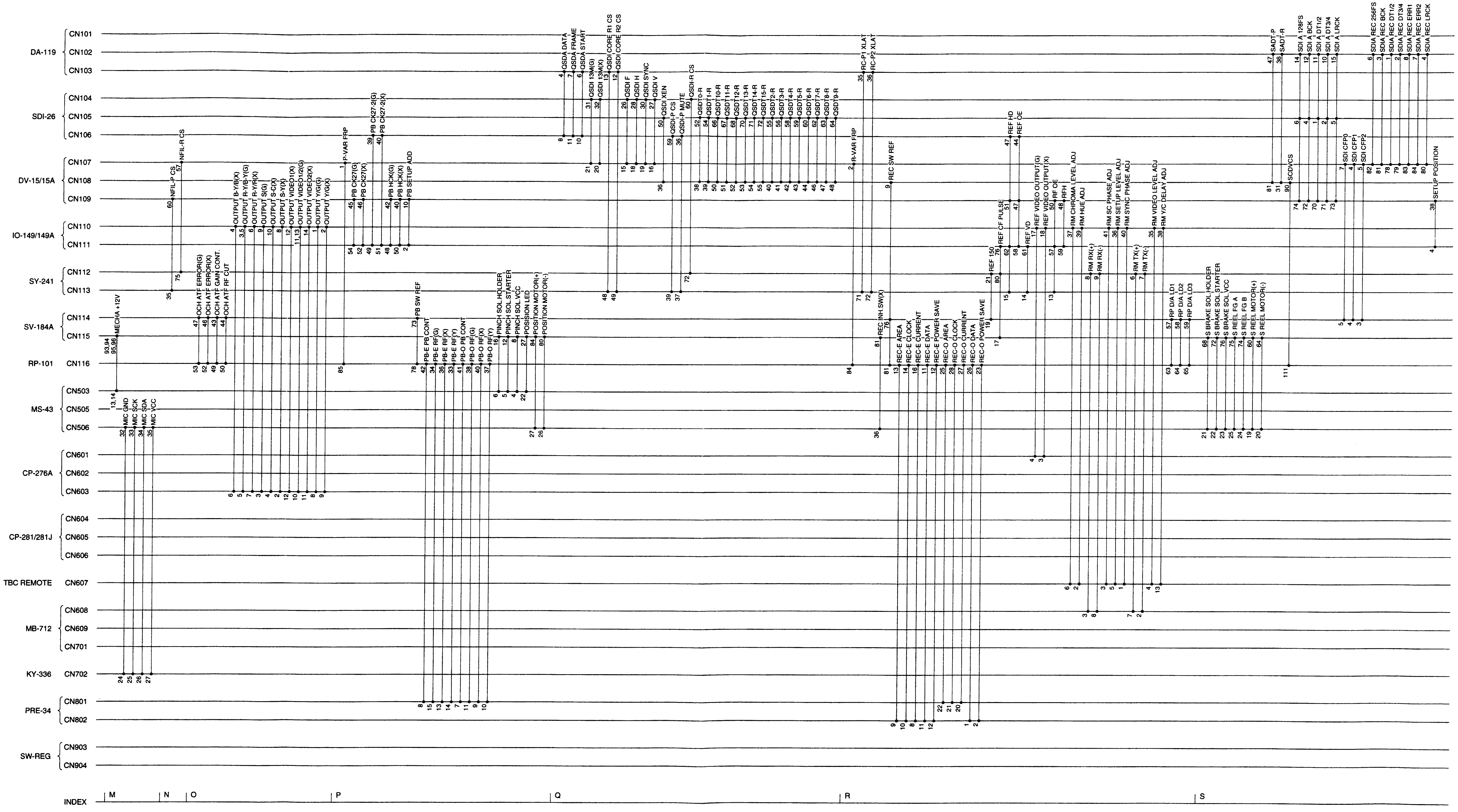

1
2
3
4
5

A | B | C | D | E | F | G | H

SONY-SP0754 / DRUCK 476

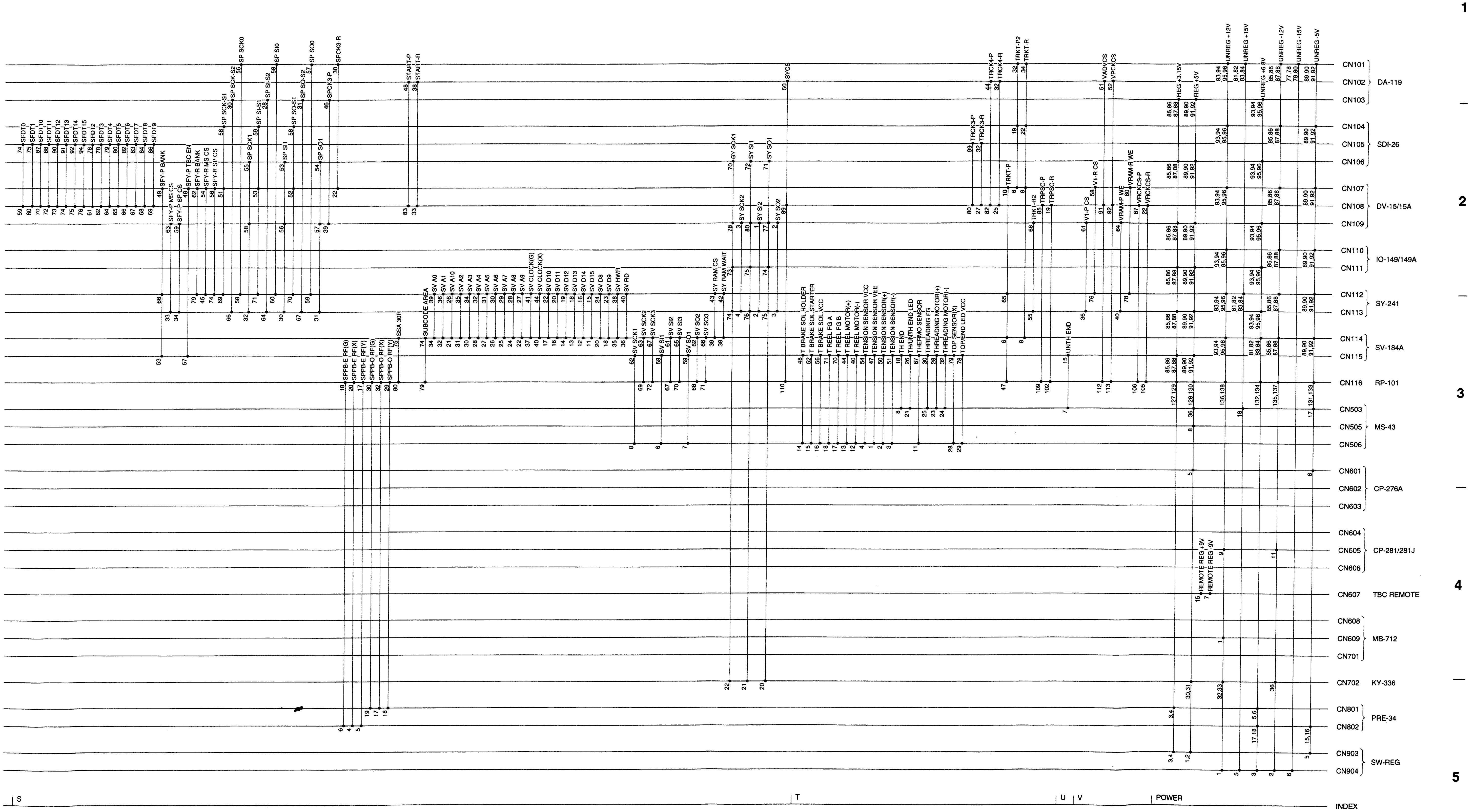

MB-712 (6/6)

BOARD SUFFIX : -11, 12
MODEL DSR-80/80P

MB-713 (1/5): MOTHER BOARD

10-149

CN110

603-8	OUTPUT Y/G (G)	1	2	OUTPUT Y/G (X)	603-9
603-5. 110-5	OUTPUT R-Y/B-Y (G)	3	4	OUTPUT B-Y/B (X)	603-6
603-5. 110-3	OUTPUT R-Y/B-Y (G)	5	6	OUTPUT R-Y/R (X)	603-7
	GND	7	8	OUTPUT S-Y (X)	603-2
603-3	OUTPUT S (G)	9	10	OUTPUT S-C (X)	603-4
603-10. 110-13	OUTPUT VIDEO (G)	11	12	OUTPUT VIDEO1 (X)	603-12
603-10. 110-11	OUTPUT VIDEO (G)	13	14	OUTPUT VIDEO2 (X)	603-11
601-2	INPUT REF/RGB SYNC (G)	15	16	INPUT REF/RGB SYNC (X)	601-1
601-4	REF VIDEO OUTPUT (G)	17	18	REF VIDEO OUTPUT (X)	601-3
	N.C	19	20	N.C	
	GND	21	22	N.C	
	GND	23	24	N.C	
	GND	25	26	N.C	
	GND	27	28	N.C	
	GND	29	30	N.C	
	GND	31	32	N.C	
	GND	33	34	N.C	
607-4	RM VIDEO LEVEL ADJ	35	36	RM SETUP LEVEL ADJ	607-5
607-6	RM CHROMA LEVEL ADJ	37	38	RM Y/C DELAY ADJ	607-13
607-2	RM HUE ADJ	39	40	RM SYNC PHASE ADJ	607-1
607-3	RM SC PHASE ADJ	41	42	N.C	
	N.C	43	44	N.C	
	N.C	45	46	N.C	
	N.C	47	48	N.C	
	N.C	49	50	N.C	
	N.C	51	52	N.C	
	N.C	53	54	N.C	
	N.C	55	56	N.C	
	N.C	57	58	N.C	
	N.C	59	60	N.C	
	N.C	61	62	N.C	
	N.C	63	64	N.C	
	N.C	65	66	N.C	
	N.C	67	68	N.C	
	N.C	69	70	N.C	
	N.C	71	72	N.C	
	N.C	73	74	N.C	
	N.C	75	76	N.C	
	GND	77	78	GND	
	N.C	79	80	N.C	
	N.C	81	82	N.C	
	N.C	83	84	N.C	
	UNREG -12V	85	86	UNREG -12V	
	UNREG -12V	87	88	UNREG -12V	
	UNREG -5V	89	90	UNREG -5V	
	UNREG -5V	91	92	UNREG -5V	
	UNREG +12V	93	94	UNREG +12V	
	UNREG +12V	95	96	UNREG +12V	
	GND	97	98	GND	
	GND	99	100	GND	

10-149

CN111

	N.C	1	2	PB SETUP ADD	109-3
	GND	3	4	SETUP POSITION	109-31
	GND	5	6	D/A MPX	109-30
	N.C	7	8	D/A Y DATA 0	109-4
	GND	9	10	D/A Y DATA 1	109-6
	N.C	11	12	D/A Y DATA 2	109-7
	GND	13	14	D/A Y DATA 3	109-8
	N.C	15	16	D/A Y DATA 4	109-10
	GND	17	18	D/A Y DATA 5	109-11
	N.C	19	20	D/A Y DATA 6	109-12
	GND	21	22	D/A Y DATA 7	109-14
	N.C	23	24	D/A Y DATA 8	109-15
	GND	25	26	D/A Y DATA 9	109-16
	GND	27	28	ACLK	109-18
	GND	29	30	D/A C DATA 0	109-19
	N.C	31	32	D/A C DATA 1	109-20
	GND	33	34	D/A C DATA 2	109-22
	N.C	35	36	D/A C DATA 3	109-23
	GND	37	38	D/A C DATA 4	109-24
	N.C	39	40	D/A C DATA 5	109-26
	GND	41	42	D/A C DATA 6	109-27
	N.C	43	44	D/A C DATA 7	109-28
	GND	45	46	GND	
	N.C	47	48	PB HCK (G)	109-36
106-39	PB CK27-2 (G)	49	50	PB HCK (X)	109-38
106-40	PB CK27-2 (X)	51	52	PB CK27 (X)	109-39
	N.C	53	54	PB CK27 (G)	109-37
	N.C	55	56	N.C	
109-46. 113-13	RF OE	57	58	REF OE	109-47. 106-44
109-45	RFH	59	60	GND	
109-48. 113-14	REF VD	61	62	REF HD	106-47. 109-49. 113-15
115-73	H:EXT SYNC MODE	63	64	H:WIDE DC	113-16
115-77	H:EXT BURST EXIST	65	66	INPUT WIDE DET	113-17
113-18	CHARACTER FRAME	67	68	CHARACTER SIG	113-19
	GND	69	70	L:TBC CPU CS	113-20
113-22	L:MAINTE MODE	71	72	INPUT LTB DET	113-23
106-70. 109-65. 113-74. 702-22	SY SCK1	73	74	SY SO1	106-71. 109-66. 113-75. 702-20
106-72. 109-67. 113-76. 702-21	SY SI1	75	76	REF CF PULSE	109-75. 115-17
115-13	H:STD/L:NON-STD	77	78	INPUT CF PULSE	115-21
	GND	79	80	N.C	
702-28	LOCAL SYNC PHASE ADJ	81	82	LOCAL SC PHASE ADJ	702-29
106-76. 109-69. 112-46. 113-80. 114-42. 702-18	L:CPU RESET	83	84	N.C	
	REG +3.15V	85	86	REG +3.15V	
	REG +3.15V	87	88	REG +3.15V	
	REG +5V	89	90	REG +5V	
	REG +5V	91	92	REG +5V	
	UNREG +6.8V	93	94	UNREG +6.8V	
	UNREG +6.8V	95	96	UNREG +6.8V	
	GND	97	98	GND	
	GND	99	100	GND	

REF NO	CHANGED INFORMATION	LOT NO
FL1-8	ADDED	610-

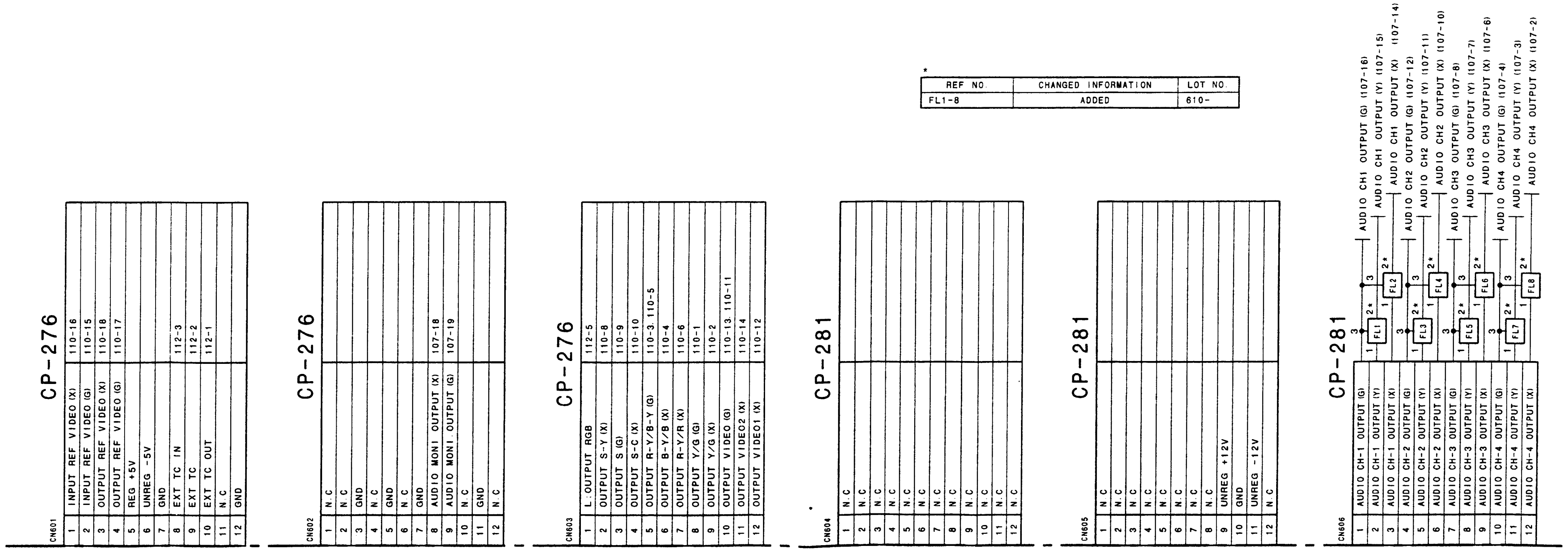

13-158 13-158

SONY-SP0754 / DRUCK 478

DSR-60/60P

1

DV-17

CN107

	GND	1	2	AUDIO CH4 OUTPUT (Y)	606-11
606-12	AUDIO CH4 OUTPUT (X)	3	4	AUDIO CH4 OUTPUT (G)	606-10
	GND	5	6	AUDIO CH3 OUTPUT (Y)	606-8
606-9	AUDIO CH3 OUTPUT (X)	7	8	AUDIO CH3 OUTPUT (G)	606-7
	GND	9	10	AUDIO CH2 OUTPUT (Y)	606-5
606-6	AUDIO CH2 OUTPUT (X)	11	12	AUDIO CH2 OUTPUT (G)	606-4
	GND	13	14	AUDIO CH1 OUTPUT (Y)	606-2
606-3	AUDIO CH1 OUTPUT (X)	15	16	AUDIO CH1 OUTPUT (G)	606-1
	GND	17	18	AUDIO MONI. OUTPUT (X)	602-8
602-9	AUDIO MONI. OUTPUT (G)	19	20	GND	
	GND	21	22	N.C	
701-10. 701-8. 701-6. 701-12	HEADPHONE VR (G)	23	24	HEADPHONE CH1 VR (X)	701-7
	GND	25	26	HEADPHONE CH2 VR (X)	701-9
	N.C	27	28	N.C	
	N.C	29	30	N.C	
	N.C	31	32	N.C	114-10
	N.C	33	34	AUDIO OUTPUT MUTE	112-10
112-11	AUDIO RC-P1 MUTE	35	36	AUDIO RC-P2 MUTE	112-12
	N.C	37	38	AUDIO PB RESET	112-13
	N.C	39	40	N.C	
	N.C	41	42	GND	
112-14	AUD SFY CS	43	44	AUD JOG CS	112-47
	N.C	45	46	AUD P1 CS	112-48
112-50	AUD P2 CS	47	48	FS CONT-P CS	112-51
	N.C	49	50	DSP P1 CS	112-52
112-53	DSP P2 CS	51	52	DSP-P1 XLAT	112-54
	N.C	53	54	DSP-P2 XLAT	112-55
112-56	L:DSP-P1 MUTE	55	56	L:DSP-P2 MUTE	112-57
	N.C	57	58	SP SCK0	112-58
112-59	SP SO0	59	60	SP SI0	112-60
	N.C	61	62	DSP-P READY	112-61
	N.C	63	64	N.C	
104-20. 112-63. 114-7	FLTT1-P	65	66	FLTT0-P	112-64
104-19. 114-6. 112-65	TRKT-P	67	68	SFY-P TBC EN	115-57
	N.C	69	70	SFY-P BANK	115-53
	N.C	71	72	L:JC RESET	104-84. 112-68
	N.C	73	74	N.C	
	N.C	75	76	L:CTLG RESET	112-73
	UNREG -15V	77	78	UNREG -15V	
	UNREG -15V	79	80	UNREG -15V	
	UNREG +15V	81	82	UNREG +15V	
	UNREG +15V	83	84	UNREG +15V	
	UNREG -12V	85	86	UNREG -12V	
	UNREG -12V	87	88	UNREG -12V	
	UNREG -5V	89	90	UNREG -5V	
	UNREG -5V	91	92	UNREG -5V	
	UNREG +12V	93	94	UNREG +12V	
	UNREG +12V	95	96	UNREG +12V	
	GND	97	98	GND	
	GND	99	100	GND	

DV-17

CN108

	GND	1	2	N.C	
	N.C	3	4	N.C	
	GND	5	6	N.C	
114-73. 116-67	PB SW REF	7	8	GND	
	GND	9	10	TRPSC	116-79
116-80	FRPSC	11	12	VRCKCS	116-81
	GND	13	14	N.C	
116-83	SYCS	15	16	SCDVCS	116-84
	GND	17	18	VADVCS	116-85
116-86	VPCKCS	19	20	GND	
	GND	21	22	DTCS0	116-88
116-89	DTCS1	23	24	DTCS2	116-90
	GND	25	26	DTCS3	116-91
116-92	DTCS4	27	28	DTCS5	116-93
	GND	29	30	DTCS6	116-94
116-95	DTCS7	31	32	DRCKREF	116-97
	GND	33	34	SPCK3	116-99
	GND	35	36	GND	
	N.C	37	38	N.C	
	N.C	39	40	JOG SPEED	115-25
	N.C	41	42	N.C	
	N.C	43	44	N.C	
	N.C	45	46	N.C	
	N.C	47	48	N.C	
	N.C	49	50	N.C	
	N.C	51	52	N.C	
	N.C	53	54	N.C	
	N.C	55	56	N.C	
	N.C	57	58	N.C	
	N.C	59	60	N.C	
	N.C	61	62	N.C	
	N.C	63	64	N.C	
	N.C	65	66	SY SI2	113-2
113-3	SY SO2	67	68	SY SCK2	113-4
	N.C	69	70	CTLG-P MOD CS	113-6
113-7	CTLG-P SP CS	71	72	CTLG SUB-P CS	113-8
	GND	73	74	GND	
105-95	IENPV-P	75	76	IENPA-P	105-96
	GND	77	78	SFDT0	105-74
105-75	SFDT1	79	80	SFDT2	105-76
	GND	81	82	SFDT3	105-78
105-79	SFDT4	83	84	SFDT5	105-80
	GND	85	86	SFDT6	105-82
105-83	SFDT7	87	88	SFDT8	105-84
	GND	89	90	SFDT9	105-86
105-87	SFDT10	91	92	SFDT11	105-88
	GND	93	94	SFDT12	105-90
105-91	SFDT13	95	96	SFDT14	105-92
	GND	97	98	SFDT15	105-94
105-99	TRCK3-P (X)	99	100	TRCK3-P (G)	105-100

DV-17

CN109

	GND	1	2	GND	
111-2	PB SETUP ADD	3	4	D/A Y DATA 0	111-8
	GND	5	6	D/A Y DATA 1	111-10
111-12	D/A Y DATA 2	7	8	D/A Y DATA 3	111-14
	GND	9	10	D/A Y DATA 4	111-16
111-18	D/A Y DATA 5	11	12	D/A Y DATA 6	111-20
	GND	13	14	D/A Y DATA 7	111-22
111-24	D/A Y DATA 8	15	16	D/A Y DATA 9	111-26
	GND	17	18	ACLK	111-28
111-30	D/A C DATA 0	19	20	D/A C DATA 1	111-32
	GND	21	22	D/A C DATA 2	111-34
111-36	D/A C DATA 3	23	24	D/A C DATA 4	111-38
	GND	25	26	D/A C DATA 5	111-40
111-42	D/A C DATA 6	27	28	D/A C DATA 7	111-44
	GND	29	30	D/A MPX	111-6
111-4	SETUP POSITION	31	32	N.C	
	GND	33	34	N.C	
	N.C	35	36	PB HCK (G)	111-48
111-54	PB CK27 (G)	37	38	PB HCK (X)	111-50
111-52	PB CK27 (X)	39	40	N.C	
	GND	41	42	N.C	
	N.C	43	44	N.C	
111-59	RFH	45	46	RF OE	111-57. 113-13
111-58. 106-44	REF OE	47	48	REF VD	111-61. 113-14
106-47. 111-62. 113-15	REF HD	49	50	L:SDI OUT OP CS	113-28
106-53. 113-30	SP SI1	51	52	SP SO1	106-54. 113-31
106-55. 113-32	SP SCK1	53	54	SFY-P SP CS	113-34
113-35	NFIL-P CS	55	56	V1-P CS	113-36
113-38	JUST-P CS	57	58	VRAM-P	113-40
113-33	SFY-P MS CS	59	60	DA-P1 XLAT	113-69
113-73	DA-P2 XLAT	61	62	N.C	
113-71	RC-P1 XLAT	63	64	RC-P2 XLAT	113-72
106-70. 111-73. 113-74. 702-22	SY SCK1	65	66	SY SO1	106-71. 111-74. 113-75. 702-20
106-72. 111-75. 113-76. 702-21	SY SI1	67	68	L:SDI OUT OP EXIST	113-79
106-76. 111-83. 112-46. 113-80. 114-42. 702-18	L:CPU RESET	69	70	L:QSDI OP EXIST	106-77. 113-82
113-24	CC-F1	71	72	CC-F2	113-44
	N.C	73	74	N.C	
111-76. 112-80	REF CF PULSE	75	76	N.C	
	N.C	77	78	N.C	
	N.C	79	80	N.C	
	N.C	81	82	N.C	
	N.C	83	84	N.C	
	REG +3.15V	85	86	REG +3.15V	
	REG +3.15V	87	88	REG +3.15V	
	REG +5V	89	90	REG +5V	
	REG +5V	91	92	REG +5V	
	UNREG +6.8V	93	94	UNREG +6.8V	
	UNREG +6.8V	95	96	UNREG +6.8V	
	GND	97	98	GND	
	GND	99	100	GND	

2

3

4

MS-43

CN503

1	CAPSTAN DIR CONT	115-11
2	CAP BRAKE	115-14
3	CAPSTAN DRIVE	115-4
4	PINCH SOL.VCC	115-8
5	PINCH SOL.STARTER	115-12
6	PINCH SOL.HOLDER	115-16
7	UNTH END	115-15
8	TH END	115-18
9	CLEANING SOL.STARTER	115-20
10	CLEANING SOL.VCC	115-24
11	DEW DET (G)	115-19
12	DEW DET (X)	115-22
13	MECHA +12V	
14	MECHA +12V	
15	GND	
16	GND	
17	UNREG -5V	
18	UNREG +15V	
19	CLEANING SOL.HOLDER	115-29
20	N.C	
21	TH/UNTH END LED	115-26
22	POSISION LED	115-27
23	THREADING MOTOR (+)	115-28
24	THREADING MOTOR (-)	115-32
25	THREADING FG	115-30
26	DRUM DRIVE	115-36
27	DRUM FG	115-31
28	DRUM DIR CONT.	115-34
29	DRUM CURRENT	115-35
30	DRUM PG	115-38
31	CAPSTAN FG A	115-39
32	CAPSTAN FG B	115-42
33	EEPROM-SV RESET	115-43
34	L:MS EXIST1	115-46
35	GND	
36	REG +5V	

CC-75

CN505

1	CC DOWN3	115-23
2	CAS IN1	115-5
3	CAS IN2	115-6
4	COMP.EXIST	115-3
5	CC DOWN1	115-10
6	CC DOWN2	115-9
7	CAS IN3	115-7
8	REG +5V	
9	GND	
10	N.C	
11	N.C	
12	CC UP/DOWN MOTOR (-)	115-2
13	CC UP/DOWN MOTOR (+)	115-1

MS-43

CN506

1	TENSION SENSOR VEE	115-47
2	TENSION SENSOR (+)	115-50
3	TENSION SENSOR (-)	115-51
4	TENSION SENSOR VCC	115-54
5	END SENSOR (X)	115-55
6	SV SI1	115-58
7	SV SO1	115-59
8	SV SCK1	115-62
9	EEPROM-SV CS	115-63
10	EEPROM-SV BUSY	115-66
11	THERMO SENSOR	115-67
12	T REEL MOTOR (-)	115-40
13	T REEL MOTOR (+)	115-44
14	T BRAKE SOL.HOLDER	115-48
15	T BRAKE SOL.STARTER	115-52
16	T BRAKE SOL.VCC	115-56
17	T REEL FG B	115-70
18	T REEL FG A	115-71
19	S REEL MOTOR (+)	115-60
20	S REEL MOTOR (-)	115-64
21	S BRAKE SOL.HOLDER	115-68
22	S BRAKE SOL.STARTER	115-72
23	S BRAKE SOL.VCC	115-76
24	S REEL FG B	115-74
25	S REEL FG A	115-75
26	POSITION MOTOR (-)	115-80
27	POSITION MOTOR (+)	115-84
28	TOP SENSOR (X)	115-79
29	TOP/END LED VCC	115-78
30	H:S POSITION	115-82
31	H:L POSITION	115-83
32	MIC GND	702-24
33	MIC SCK	702-25
34	MIC SDA	702-26
35	MIC VCC	702-27
36	REC INH SW (X)	115-81

5

MB-713 (1/5)

MODEL DSR-60/60P

MB-713 (2/5): MOTHER BOARD

SDI-26 (CN104)

	N.C	1	2	N.C	
	N.C	3	4	N.C	
	N.C	5	6	N.C	
	N.C	7	8	N.C	
	N.C	9	10	N.C	
	N.C	11	12	N.C	
	N.C	13	14	N.C	
	N.C	15	16	N.C	
	N.C	17	18	N.C	
	TRKT-P	19	20	FLTT1-P	107-65, 112-63, 114-7
	N.C	21	22	N.C	
	N.C	23	24	N.C	
	N.C	25	26	N.C	
	N.C	27	28	N.C	
	GND	29	30	N.C	
	N.C	31	32	N.C	
	N.C	33	34	N.C	
	N.C	35	36	N.C	
	N.C	37	38	N.C	
	GND	39	40	N.C	
	N.C	41	42	N.C	
	N.C	43	44	N.C	
	N.C	45	46	N.C	
	N.C	47	48	N.C	
	N.C	49	50	N.C	
	N.C	51	52	N.C	
	N.C	53	54	N.C	
	N.C	55	56	SP SCK-S1	112-69
	GND	57	58	SP SO-S1	112-70
112-71	SP SI-S1	59	60	QSDI-R CS	112-72
	GND	61	62	N.C	
	N.C	63	64	N.C	
	GND	65	66	N.C	
	N.C	67	68	N.C	
	N.C	69	70	N.C	
	N.C	71	72	N.C	
	N.C	73	74	N.C	
	N.C	75	76	N.C	
	N.C	77	78	N.C	
	N.C	79	80	N.C	
	N.C	81	82	N.C	
	N.C	83	84	L.JC RESET	107-72, 112-68
	UNREG -12V	85	86	UNREG -12V	
	UNREG -12V	87	88	UNREG -12V	
	UNREG -5V	89	90	UNREG -5V	
	UNREG -5V	91	92	UNREG -5V	
	UNREG +12V	93	94	UNREG +12V	
	UNREG +12V	95	96	UNREG +12V	
	GND	97	98	GND	
	GND	99	100	GND	

SDI-26 (CN105)

	N.C	1	2	N.C	
	N.C	3	4	N.C	
	N.C	5	6	N.C	
	N.C	7	8	N.C	
	N.C	9	10	N.C	
	N.C	11	12	N.C	
	N.C	13	14	N.C	
	N.C	15	16	N.C	
	N.C	17	18	N.C	
	N.C	19	20	N.C	
	N.C	21	22	N.C	
	N.C	23	24	N.C	
	N.C	25	26	N.C	
	N.C	27	28	N.C	
	N.C	29	30	N.C	
	N.C	31	32	N.C	
	N.C	33	34	N.C	
	N.C	35	36	N.C	
	N.C	37	38	N.C	
	N.C	39	40	N.C	
	N.C	41	42	N.C	
	N.C	43	44	N.C	
	N.C	45	46	N.C	
	N.C	47	48	N.C	
	N.C	49	50	N.C	
	N.C	51	52	N.C	
	GND	53	54	N.C	
	N.C	55	56	N.C	
	GND	57	58	N.C	
	N.C	59	60	N.C	
	GND	61	62	N.C	
	N.C	63	64	N.C	
	GND	65	66	N.C	
	N.C	67	68	N.C	
	GND	69	70	N.C	
	N.C	71	72	N.C	
	GND	73	74	SFDT0	108-78
108-79	SFDT1	75	76	SFDT2	108-80
	GND	77	78	SFDT3	108-82
108-83	SFDT4	79	80	SFDT5	108-84
	GND	81	82	SFDT6	108-86
108-87	SFDT7	83	84	SFDT8	108-88
	GND	85	86	SFDT9	108-90
108-91	SFDT10	87	88	SFDT11	108-92
	GND	89	90	SFDT12	108-94
108-95	SFDT13	91	92	SFDT14	108-96
	GND	93	94	SFDT15	108-76
108-75	IENPV-P	95	96	IENPA-P	
	GND	97	98	N.C	
108-99	TRCK3-P (X)	99	100	TRCK3-P (G)	108-100

*

REF NO.	CHANGED INFORMATION	LOT NO.
C7	ADDED	610-
Q3	DTA144EKA → 2SC3326	
Q5	ADDED	
R4, 10	10k → 1k	
R11	DELETED	709-
R13, 14, 16, 17	ADDED	610-
R15	ADDED	610
R15	DELETED	610-

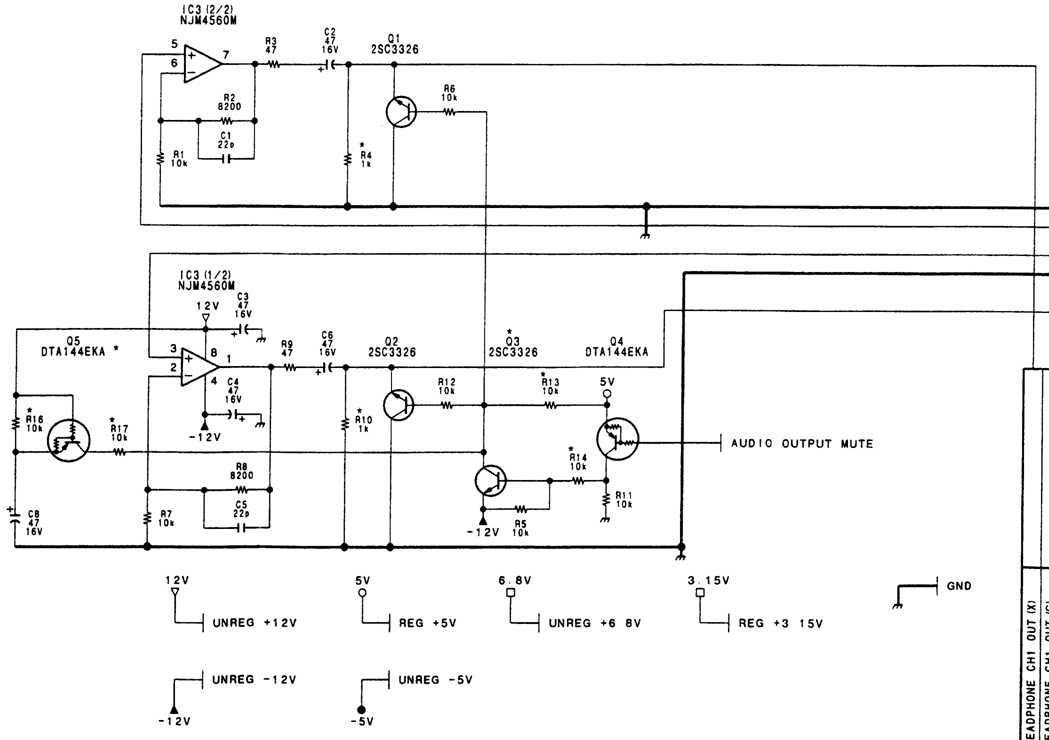

CN701

Pin	Signal	Destination
1	HEADPHONE CH1 OUT (X)	
2	HEADPHONE CH1 OUT (G)	
3	HEADPHONE CH2 OUT (X)	
4	HEADPHONE CH2 OUT (G)	
5	HEADPHONE CH1 RET VR (X)	
6	HEADPHONE CH1 RET VR (G)	107-23, 701-10, 701-8
7	HEADPHONE CH1 VR (X)	107-24
8	HEADPHONE VR (G)	107-23, 701-10, 701-6
9	HEADPHONE CH2 VR (X)	107-26
10	HEADPHONE VR (G)	107-23, 701-8, 701-12
11	HEADPHONE CH2 RET VR (X)	
12	HEADPHONE CH2 RET VR (G)	107-23, 701-8, 701-10

KY-336

CN702

Pin	Signal	Destination
1	N.C	
2	CH-1 VR (G)	702-6
3	N.C	
4	N.C	
5	N.C	
6	CH-1 VR (G)	702-2
7	N.C	
8	N.C	
9	N.C	
10	N.C	
11	N.C	
12	N.C	
13	N.C	
14	N.C	
15	N.C	
16	N.C	
17	N.C	
18	L.CPU RESET	106-76, 109-69, 111-83, 112-46, 113-80, 114-42
19	L.KY CS	113-26
20	SY SO1	106-71, 109-66, 111-74, 113-75
21	SY SI1	106-72, 109-67, 111-75, 113-76
22	SY SCK1	106-70, 109-65, 111-73, 113-74
23	N.C	
24	MIC GND	506-32
25	MIC SCK	506-33
26	MIC SDA	506-34
27	MIC VCC	506-35
28	LOCAL SYNC PHASE ADJ	111-81
29	LOCAL SC PHASE ADJ	111-82
30	REG +5V	
31	REG +5V	
32	UNREG +12V	
33	UNREG +12V	
34	GND	
35	GND	
36	UNREG -12V	

 MB-713 (2/5)

 DSR-60/60P

1

SDI-26

CN106

	N.C	1	2	N.C	
	N.C	3	4	GND	
	GND	5	6	N.C	
	N.C	7	8	N.C	
	GND	9	10	N.C	
	N.C	11	12	N.C	
	GND	13	14	N.C	
	N.C	15	16	N.C	
	GND	17	18	N.C	
	N.C	19	20	N.C	
	GND	21	22	N.C	
	N.C	23	24	N.C	
	GND	25	26	N.C	
	N.C	27	28	GND	
	GND	29	30	N.C	
	N.C	31	32	N.C	
	N.C	33	34	N.C	
	N.C	35	36	QSDI-P MUTE	113-37
	N.C	37	38	N.C	
111-49	PB CK27-2 (G)	39	40	PB CK27-2 (X)	111-51
	N.C	41	42	GND	
	N.C	43	44	REF OE	109-47. 111-58
	N.C	45	46	N.C	
109-49. 111-62. 113-15	REF HD	47	48	GND	
	N.C	49	50	N.C	
	N.C	51	52	GND	
109-51. 113-30	SP SI1	53	54	SP SO1	109-52. 113-31. 104-26
109-53. 113-32	SP SCK1	55	56	N.C	
	N.C	57	58	N.C	
113-39	QSDI-P CS	59	60	N.C	
	N.C	61	62	N.C	
	N.C	63	64	L:QSDI OP CS	113-46
	N.C	65	66	N.C	
	N.C	67	68	N.C	
	N.C	69	70	SY SCK1	109-65. 111-73. 113-74. 702-22
109-66. 111-74. 113-75. 702-20	SY SO1	71	72	SY SI1	109-67. 111-75. 113-76. 702-21
	N.C	73	74	N.C	
	N.C	75	76	L:CPU RESET	109-69. 111-83. 112-46. 113-80. 114-42. 702-18
109-70. 113-82	L:QSDI OP EXIST	77	78	N.C	
	N.C	79	80	N.C	
	N.C	81	82	N.C	
	N.C	83	84	N.C	
	REG +3.15V	85	86	REG +3.15V	
	REG +3.15V	87	88	REG +3.15V	
	REG +5V	89	90	REG +5V	
	REG +5V	91	92	REG +5V	
	UNREG +6.8V	93	94	UNREG +6.8V	
	UNREG +6.8V	95	96	UNREG +6.8V	
	GND	97	98	GND	
	GND	99	100	GND	

* C7 470p * R15 NM

SY-241

CN112

601-10	EXT LTC OUTPUT	1	2	EXT LTC GND	601-9
601-8	EXT LTC INPUT	3	4	N.C	
603-1	L:OUTPUT RGB	5	6	RM TX (+)	608-7
608-2	RM TX (-)	7	8	RM RX (+)	608-3
608-8	RM RX (-)	9	10	AUDIO OUTPUT MUTE	107-34
107-35	AUDIO RC-P1 MUTE	11	12	AUDIO RC-P2 MUTE	107-36
107-38	AUDIO PB RESET	13	14	AUD SFY CS	107-43
114-11	SV D15	15	16	SV D14	114-12
114-15	1/2 VD	17	18	SV D13	114-13
114-14	SV D12	19	20	SV D11	114-16
114-19	REF 150	21	22	SV D10	114-17
114-18	SV D9	23	24	SV D8	114-20
114-23	H:NTSC/L:PAL	25	26	SV A10	114-21
114-22	SV A9	27	28	SV A8	114-24
114-25	SV A7	29	30	SV A6	114-26
114-27	SV A5	31	32	SV A4	114-28
114-77	H:RECORDER	33	34	SV A3	114-30
114-31	SV A2	35	36	SV A1	114-32
	GND	37	38	SV HWR	114-35
114-34	SV A0	39	40	SV RD	114-36
114-39	SV CLOCK (G)	41	42	SY RAM WAIT	114-38
114-39	SY RAM CS	43	44	SV CLOCK (X)	114-40
	N.C	45	46	L:CPU RESET	106-76. 109-69. 111-83. 113-80. 114-42. 702-18
107-44	AUD JOG CS	47	48	AUD P1 CS	107-46
	N.C	49	50	AUD P2 CS	107-47
107-48	FS CONT-P CS	51	52	DSP P1 CS	107-50
107-51	DSP P2 CS	53	54	DSP-P1 XLAT	107-52
107-54	DSP-P2 XLAT	55	56	L:DSP-P1 MUTE	107-55
107-56	L:DSP-P2 MUTE	57	58	SP SCK0	107-58
107-59	SP SO0	59	60	SP SI0	107-60
107-62	DSP-P READY	61	62	N.C	
107-65. 104-20. 114-7	FLTT1-P	63	64	FLTT0-P	107-66
104-19. 107-67. 114-6	TRKT-P	65	66	SFY-P BANK	107-70. 115-53
115-61	FRAME PULSE	67	68	L:JC RESET	104-84. 107-72
104-56	SP SCK-S1	69	70	SP SO-S1	104-58
104-59	SP SI-S1	71	72	QSDI-R CS	104-60
107-76	L:CTLG RESET	73	74	N.C	
	N.C	75	76	N.C	
	N.C	77	78	N.C	
	N.C	79	80	REF CF PULSE	109-75. 111-76
	UNREG +15V	81	82	UNREG +15V	
	UNREG +15V	83	84	UNREG +15V	
	UNREG -12V	85	86	UNREG -12V	
	UNREG -12V	87	88	UNREG -12V	
	UNREG -5V	89	90	UNREG -5V	
	UNREG -5V	91	92	UNREG -5V	
	UNREG +12V	93	94	UNREG +12V	
	UNREG +12V	95	96	UNREG +12V	
	GND	97	98	GND	
	GND	99	100	GND	

2

3

4

5

CN607

1	RM SYNC PHASE ADJ	110-40
2	RM HUE ADJ	110-39
3	RM SC PHASE ADJ	110-41
4	RM VIDEO LEVEL ADJ	110-35
5	RM SETUP LEVEL ADJ	110-36
6	RM CHROMA LEVEL ADJ	110-37
7	REMOTE REG -9V	
8	GND	
9	GND	
10	N.C	
11	N.C	
12	N.C	
13	RM Y/C DELAY ADJ	110-38
14	N.C	
15	REMOTE REG +9V	

CN608

1	GND	
2	RM TX (-)	112-7
3	RM RX (+)	112-8
4	GND	
5	N.C	
6	GND	
7	RM TX (+)	112-6
8	RM RX (-)	112-9
9	GND	

CN609

1	UNREG +12V	
2	FAN MOTOR STOP	114-29
3	GND	

CN703

1	REG +3.15V
2	REG +5V
3	UNREG +6.8V
4	UNREG +12V
5	UNREG -12V
6	UNREG +15V
7	UNREG -15V
8	UNREG -5V
9	GND
10	GND

CN903

1	REG +5V
2	REG +5V
3	REG +3.15V
4	REG +3.15V
5	UNREG -5V
6	GND
7	GND
8	GND

CN904

1	UNREG +12V
2	UNREG -12V
3	UNREG +6.8V
4	GND
5	UNREG +15V
6	UNREG -15V

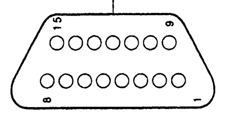

CN607 TBC REMOTE

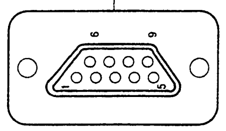

CN608 REMOTE 1 (9P)

MB-713 (2/5)
MODEL DSR-60/60P

 13-161

)NY-SP0754 / DRUCK 481

MB-713 (3/5)

DSR-60/60P

MB-713 (3/5): MOTHER BOARD

SY-241

CN113

	N.C	1	2	SY SI2	108-66
108-67	SY SO2	3	4	SY SCK2	108-68
	N.C	5	6	CTLG-P MOD CS	108-70
108-71	CTLG-P SP CS	7	8	CTLG SUB-P CS	108-72
	N.C	9	10	N.C	
	N.C	11	12	N.C	
109-46. 111-57	RF OE	13	14	REF VD	109-48. 111-61
106-47. 109-49. 111-62	REF HD	15	16	H:WIDE DC	111-64
111-66	INPUT WIDE DET	17	18	CHARACTER FRAME	111-67
111-68	CHARACTER SIG	19	20	L:TBC CPU CS	111-70
	N.C	21	22	L:MAINTE MODE	111-71
111-72	INPUT LTB DET	23	24	CC-F1	109-71
	N.C	25	26	L:KY CS	702-19
	N.C	27	28	L:SDI OUT OP CS	109-50
	N.C	29	30	SP SI1	106-53. 109-51
106-54. 109-52	SP SO1	31	32	SP SCK1	106-55. 109-53
109-59	SFY-P MS CS	33	34	SFY-P SP CS	109-54
109-55	NFIL-P CS	35	36	V1-P CS	109-56
106-36	QSDI-P MUTE	37	38	JUST-P CS	109-57
106-59	QSDI-P CS	39	40	VRAM-P	109-58
	N.C	41	42	N.C	
	N.C	43	44	CC-F2	109-72
	N.C	45	46	L:QSDI OP CS	106-64
	N.C	47	48	FIX FRP-R	115-49
	N.C	49	50	N.C	
	N.C	51	52	N.C	
	N.C	53	54	N.C	
	N.C	55	56	N.C	
	N.C	57	58	N.C	
	N.C	59	60	N.C	
	N.C	61	62	N.C	
	N.C	63	64	N.C	
	N.C	65	66	N.C	
	N.C	67	68	N.C	
109-60	DA-P1 XLAT	69	70	N.C	
109-63	RC-P1 XLAT	71	72	RC-P2 XLAT	109-64
109-61	DA-P2 XLAT	73	74	SY SCK1	106-70. 109-65. 111-73. 702-22
106-71. 109-66. 111-74. 702-20	SY SO1	75	76	SY SI1	106-72. 109-67. 111-75. 702-21
	N.C	77	78	N.C	
109-68	L:SDI OUT OP EXIST	79	80	L:CPU RESET	106-76. 109-69. 111-83. 112-46. 114-42. 702-18
	N.C	81	82	L:QSDI OP EXIST	106-77. 109-70
	N.C	83	84	GND	
	REG +3.15V	85	86	REG +3.15V	
	REG +3.15V	87	88	REG +3.15V	
	REG +5V	89	90	REG +5V	
	REG +5V	91	92	REG +5V	
	UNREG +6.8V	93	94	UNREG +6.8V	
	UNREG +6.8V	95	96	UNREG +6.8V	
	GND	97	98	GND	
	GND	99	100	GND	

SV-184

CN114

	N.C	1	2	N.C	
	N.C	3	4	N.C	
	N.C	5	6	TRKT-P	107-67. 104-19. 112-65
107-65. 104-20. 112-63	FLTT1-P	7	8	N.C	
	N.C	9	10	N.C	
112-15	SV D15	11	12	SV D14	112-16
112-18	SV D13	13	14	SV D12	112-19
112-17	1/2 VD	15	16	SV D11	112-20
112-22	SV D10	17	18	SV D9	112-23
112-21	REF 150	19	20	SV D8	112-24
112-26	SV A10	21	22	SV A9	112-27
112-25	H:NTSC/L:PAL	23	24	SV A8	112-28
112-29	SV A7	25	26	SV A6	112-30
112-31	SV A5	27	28	SV A4	112-32
609-2	FAN MOTOR STOP	29	30	SV A3	112-34
112-35	SV A2	31	32	SV A1	112-36
	GND	33	34	SV A0	112-39
112-38	SV HWR	35	36	SV RD	112-40
112-41	SV CLOCK (G)	37	38	SY RAM WAIT	112-42
112-43	SY RAM CS	39	40	SV CLOCK (X)	112-44
	N.C	41	42	L:CPU RESET	106-76. 109-69. 111-83. 112-46. 113-80. 114-42. 702-18
	N.C	43	44	N.C	
116-50	L:TEST	45	46	N.C	
	N.C	47	48	ECH ATF GAIN CONT	116-54
116-52	ATF SEL	49	50	ECH ATF RF CUT	116-55
116-56	ECH ATF ERROR (X)	51	52	ECH ATF ERROR (G)	116-57
116-51	ITI CENTER	53	54	EEPROM RP BUSY	116-58
116-59	EEPROM RP CS	55	56	EEPROM RP RESET	116-60
116-61	RP D/A LD1	57	58	N.C	
	N.C	59	60	N.C	
108-3. 116-62	SV SI2	61	62	SV SO2	108-4. 116-63
108-6. 116-64	SV SCK2	63	64	N.C	
	N.C	65	66	N.C	
	N.C	67	68	CHCD-P1 CS	116-65
	N.C	69	70	N.C	
	N.C	71	72	L:CHCD RESET	116-66
108-7. 116-67	PB SW REF	73	74	N.C	
	N.C	75	76	N.C	
112-33	H:RECORDER	77	78	N.C	
	N.C	79	80	N.C	
	UNREG +6.8V	81	82	UNREG +6.8V	
	UNREG +6.8V	83	84	UNREG +6.8V	
	UNREG -12V	85	86	UNREG -12V	
	UNREG -12V	87	88	UNREG -12V	
	UNREG -5V	89	90	UNREG -5V	
	UNREG -5V	91	92	UNREG -5V	
	UNREG +12V	93	94	UNREG +12V	
	UNREG +12V	95	96	UNREG +12V	
	GND	97	98	GND	
	GND	99	100	GND	

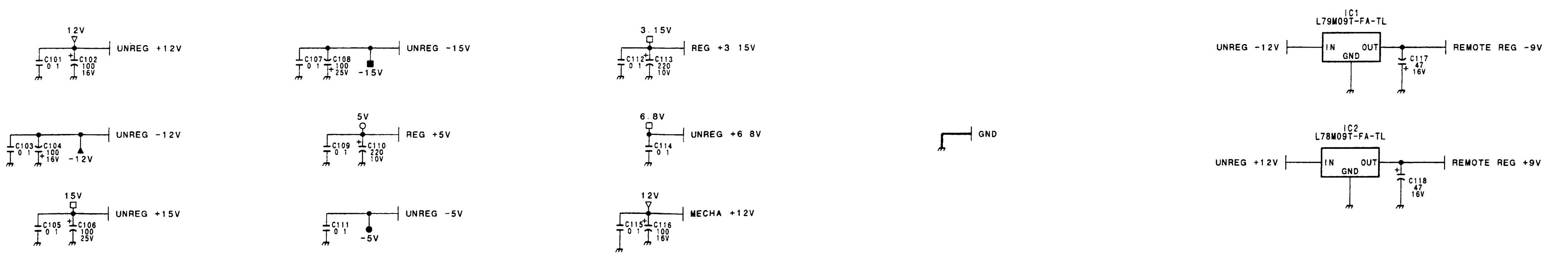

13-162

1

SV-184

	CN115				
505-13	CC UP/DOWN MOTOR (+)	1	2	CC UP/DOWN MOTOR (-)	505-12
505-4	COMP.EXIST	3	4	CAPSTAN DRIVE	503-3
505-2	CAS IN1	5	6	CAS IN2	505-3
505-7	CAS IN3	7	8	PINCH SOL.VCC	503-4
505-6	CC DOWN2	9	10	CC DOWN1	505-5
503-1	CAPSTAN DIR CONT.	11	12	PINCH SOL.STARTER	503-5
111-77	H:STD/L:NON-STD	13	14	CAP BRAKE	503-2
503-7	UNTH END	15	16	PINCH SOL.HOLDER	503-6
	N.C	17	18	TH END	503-8
503-11	DEW DET (G)	19	20	CLEANING SOL.STARTER	503-9
111-78	INPUT CF PULSE	21	22	DEW DET (X)	503-12
505-1	CC DOWN3	23	24	CLEANING SOL.VCC	503-10
108-40	JOG SPEED	25	26	TH/UNTH END LED	503-21
503-22	POSISION LED	27	28	THREADING MOTOR (+)	503-23
503-19	CLEANING SOL.HOLDER	29	30	THREADING FG	503-25
503-27	DRUM FG	31	32	THREADING MOTOR (-)	503-24
	N.C	33	34	DRUM DIR CONT.	503-28
503-29	DRUM CURRENT	35	36	DRUM DRIVE	503-26
	N.C	37	38	DRUM PG	503-30
503-31	CAPSTAN FG A	39	40	T REEL MOTOR (-)	506-12
	N.C	41	42	CAPSTAN FG B	503-32
503-33	EEPROM-SV RESET	43	44	T REEL MOTOR (+)	506-13
	N.C	45	46	L:MS EXIST1	503-34
506-1	TENSION SENSOR VEE	47	48	T BRAKE SOL.HOLDER	506-14
113-48	FIX FRP-R	49	50	TENSION SENSOR (+)	506-2
506-3	TENSION SENSOR (-)	51	52	T BRAKE SOL.STARTER	506-15
107-70. 112-66	SFY-P BANK	53	54	TENSION SENSOR VCC	506-4
506-5	END SENSOR (X)	55	56	T BRAKE SOL.VCC	506-16
107-68	SFY-P TBC EN	57	58	SV SI1	506-6
506-7	SV SO1	59	60	S REEL MOTOR (+)	506-19
112-67	FRAME PULSE	61	62	SV SCK1	506-8
506-9	EEPROM-SV CS	63	64	S REEL MOTOR (-)	506-20
	N.C	65	66	EEPROM-SV BUSY	506-10
506-11	THERMO SENSOR	67	68	S BRAKE SOL.HOLDER	506-21
	N.C	69	70	T REEL FG B	506-17
506-18	T REEL FG A	71	72	S BRAKE SOL.STARTER	506-22
111-63	H:EXT SYNC MODE	73	74	S REEL FG B	506-24
506-25	S REEL FG A	75	76	S BRAKE SOL.VCC	506-23
111-65	H:EXT BURST EXIST	77	78	TOP/END LED VCC	506-29
506-28	TOP SENSOR (X)	79	80	POSITION MOTOR (-)	506-26
506-36	REC INH.SW (X)	81	82	H:S POSITION	506-30
506-31	H:L POSITION	83	84	POSITION MOTOR (+)	506-27
	REG +3.15V	85	86	REG +3.15V	
	REG +3.15V	87	88	REG +3.15V	
	REG +5V	89	90	REG +5V	
	REG +5V	91	92	REG +5V	
	MECHA +12V	93	94	MECHA +12V	
	MECHA +12V	95	96	MECHA +12V	
	GND	97	98	GND	
	GND	99	100	GND	

RP-103

	CN116				
	GND	1	2	GND	
	GND	3	4	GND	
	GND	5	6	GND	
	GND	7	8	GND	
	REG +3.15V	9	10	REG +3.15V	
	REG +3.15V	11	12	REG +3.15V	
	UNREG +6.8V	13	14	UNREG +6.8V	
	UNREG +6.8V	15	16	UNREG +6.8V	
	REG +5V	17	18	REG +5V	
	REG +5V	19	20	REG +5V	
	GND	21	22	GND	
801-14	A GND	23	24	A GND	116-23. 116-25. 116-26. 801-14
801-14	A GND	25	26	A GND	116-23. 116-24. 116-25. 801-14
	GND	27	28	PB-O RF (X)	801-10
	GND	29	30	PB-O RF (Y)	801-12
801-11	PB-O RF (G)	31	32	PB-O RF (G)	116-31. 116-33. 116-34. 801-11
801-11	PB-O RF (G)	33	34	PB-O RF (G)	116-31. 116-32. 116-33. 801-11
	GND	35	36	PB-E RF (X)	801-10
	GND	37	38	PB-E RF (Y)	801-9
116-32. 116-33. 116-34. 801-11	PB-E RF (G)	39	40	PB-E RF (G)	116-39. 116-41. 116-42. 801-8
116-31. 116-33. 116-34. 801-11	PB-E RF (G)	41	42	PB-E RF (G)	116-39. 116-41. 116-40. 801-8
	GND	43	44	FB DUMP	801-7
	GND	45	46	GND	
	GND	47	48	GND	
	GND	49	50	L:TEST	114-45
114-53	ITI CENTER	51	52	ATF SEL	114-49
	N.C	53	54	ECH ATF GAIN CONT	114-48
114-50	ECH ATF RF CUT	55	56	ECH ATF ERROR (X)	114-51
114-52	ECH ATF ERROR (G)	57	58	EEPROM RP BUSY	114-54
114-55	EEPROM RP CS	59	60	EEPROM RP RESET	114-56
114-57	RP D/A LD1	61	62	SV SI2	108-3. 114-61
108-4. 114-62	SV SO2	63	64	SV SCK2	108-6. 114-63
114-68	CHCD-P1 CS	65	66	L:CHCD RESET	114-72
108-7. 114-73	PB SW REF	67	68	N.C	
	N.C	69	70	GND	
	GND	71	72	GND	
	GND	73	74	GND	
	GND	75	76	GND	
	GND	77	78	GND	
108-10	TRPSC	79	80	FRPSC	108-11
108-12	VRCKCS	81	82	N.C	
108-15	SYCS	83	84	SCDVCS	108-16
108-18	VADVCS	85	86	VPCKCS	108-19
	N.C	87	88	DTCS0	108-22
108-23	DTCS1	89	90	DTCS2	108-24
108-26	DTCS3	91	92	DTCS4	108-27
108-28	DTCS5	93	94	DTCS6	108-30
108-31	DTCS7	95	96	GND	
108-32	DRCKREF	97	98	GND	
108-34	SPCK3	99	100	GND	

2

3

4

PRE-39

CN801		
1	GND	
2	GND	
3	REG +3.15V	
4	REG +3.15V	
5	UNREG +6.8V	
6	UNREG +6.8V	
7	FB DUMP	116-44
8	PB-E RF (G)	116-39. 116-40. 116-41. 116-42
9	PB-E RF (Y)	116-38
10	PB-E RF (X)	116-36
11	PB-O RF (G)	116-31. 116-32. 116-33. 116-34
12	PB-O RF (Y)	116-30
13	PB-O RF (X)	116-28
14	A GND	116-23. 116-24. 116-25. 116-26

5

MB-713 (3/5)
MODEL DSR-60/60P

MB-713 (4/5): MOTHER BOARD

DSR-60/60P

1

2

3

4

5

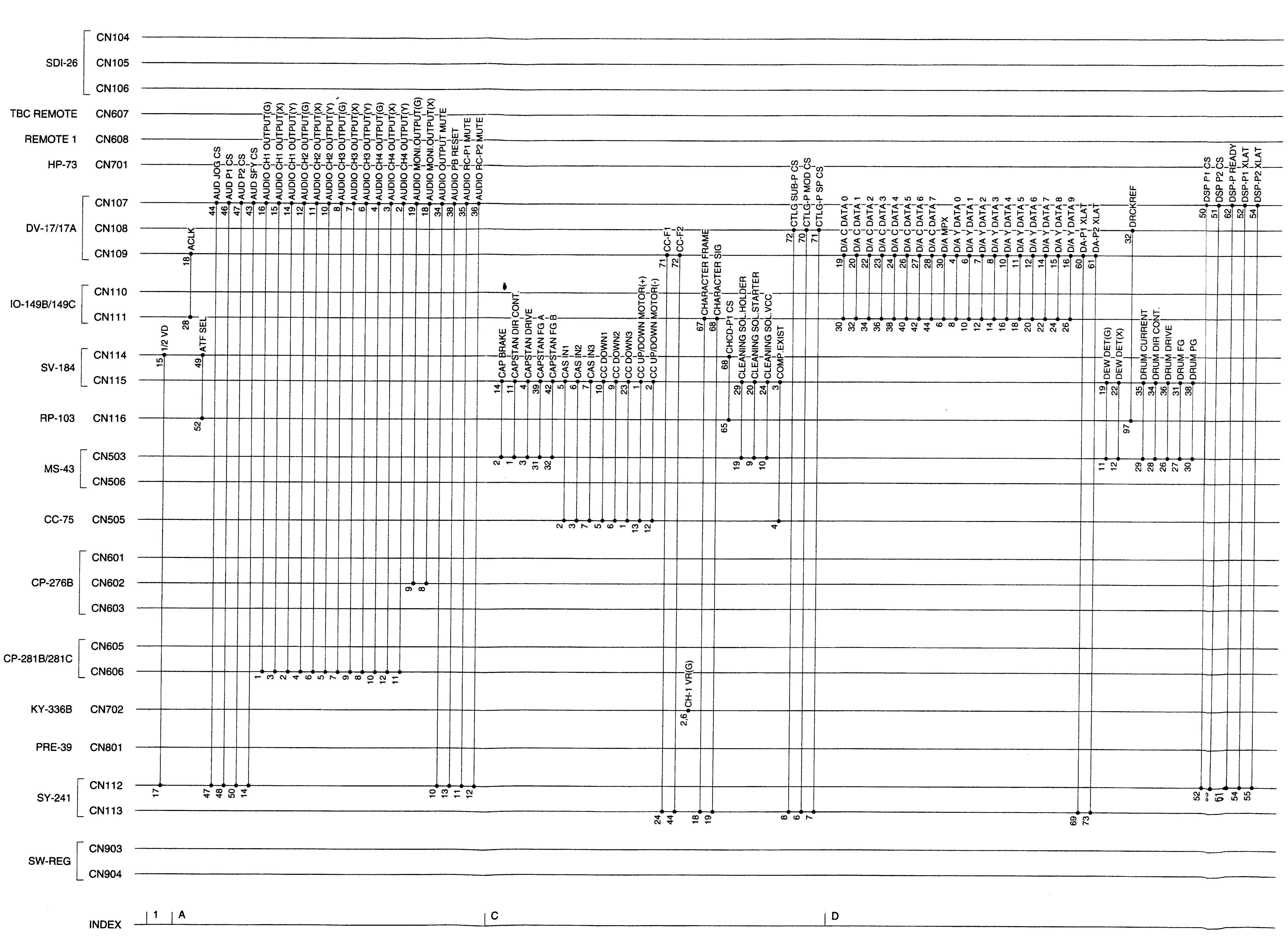

A | B | C | D | E | F | G | H

SONY-SP0754 / DRUCK 484

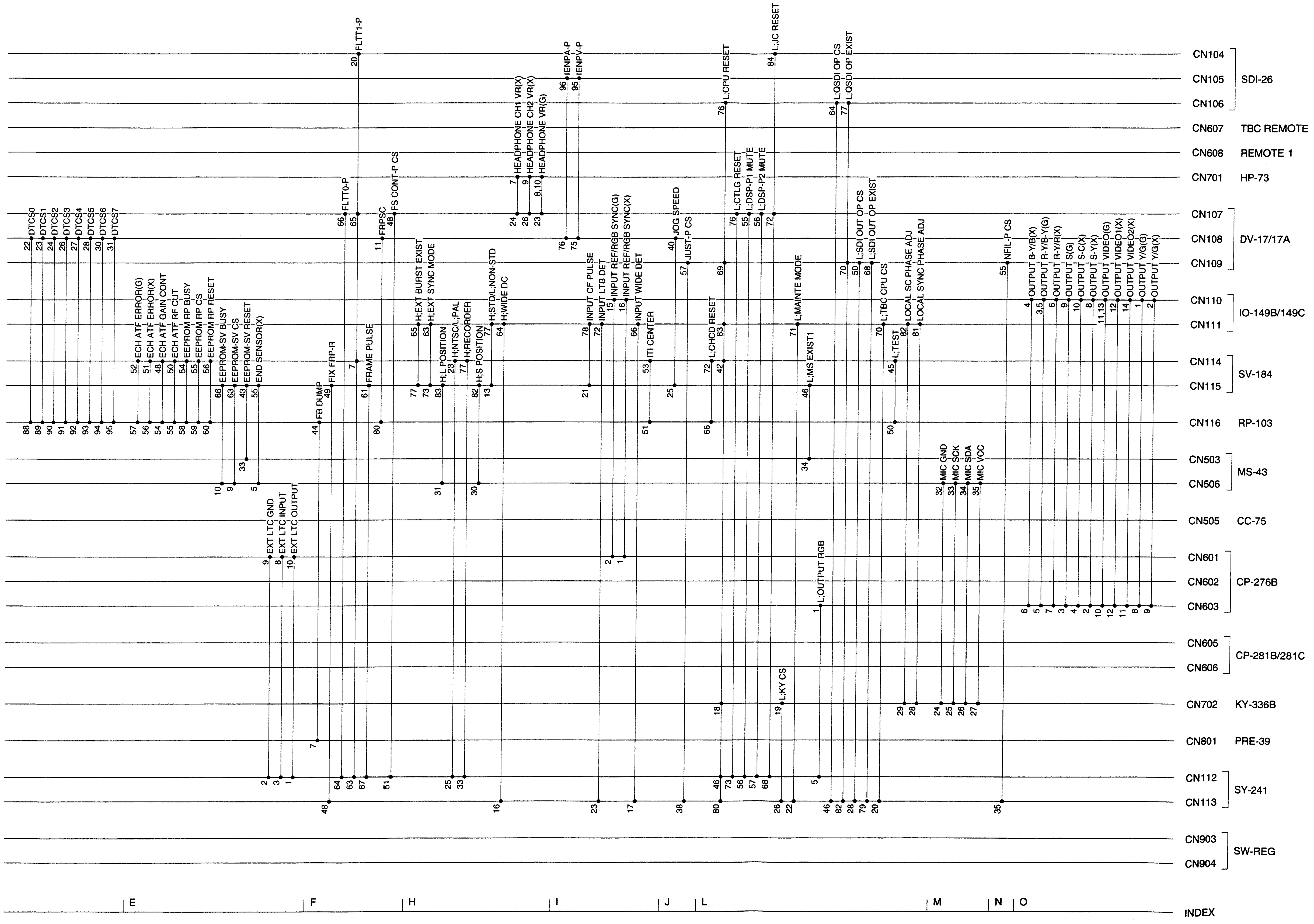

1

2

3

4

5

MB-713 (4/5)
MODEL DSR-60/60P

MB-713 (5/5): MOTHER BOARD

DSR-60/60P

DSR-60/60P

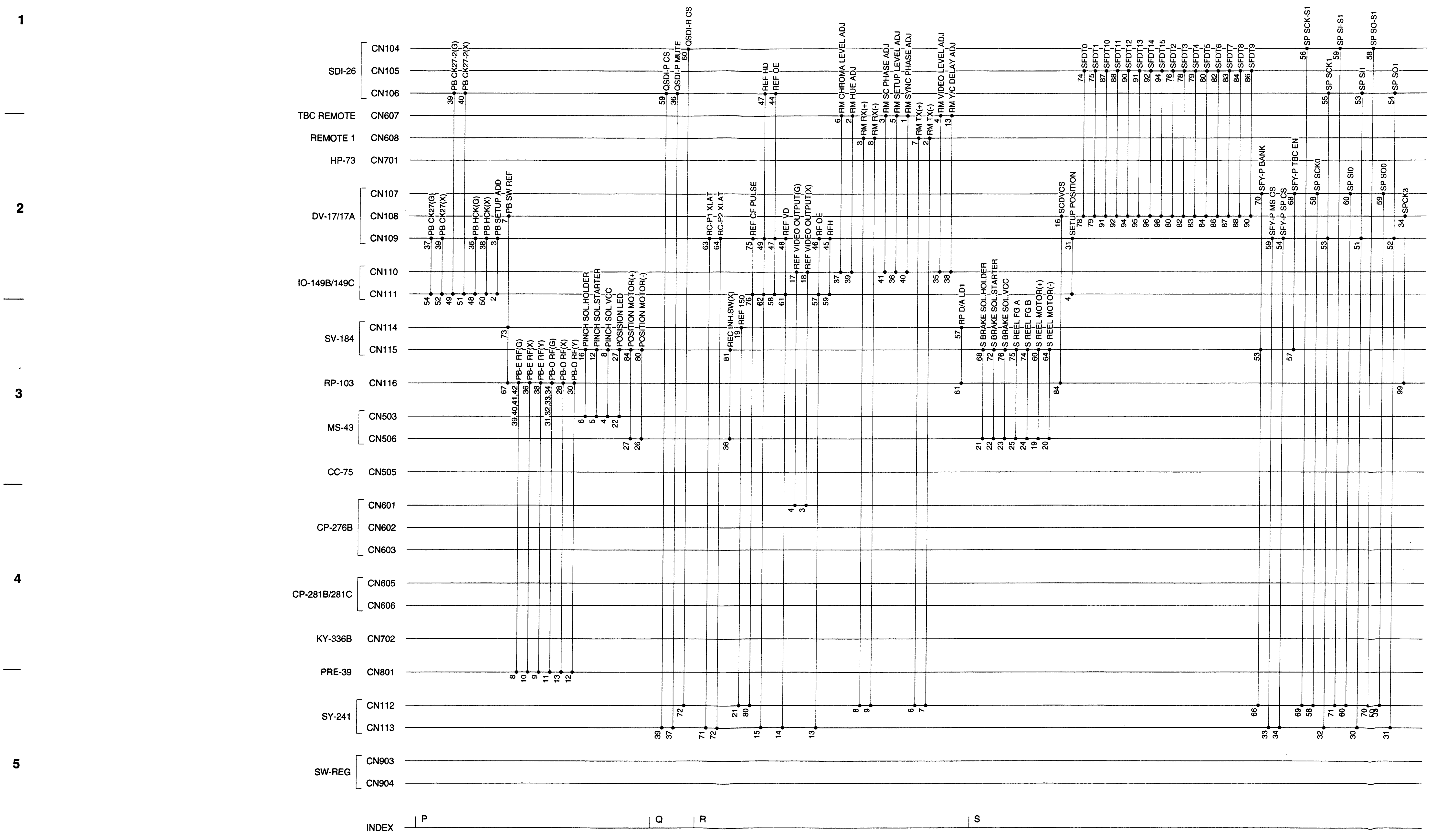

 MB-713 (5/5)

DSR-60/60P

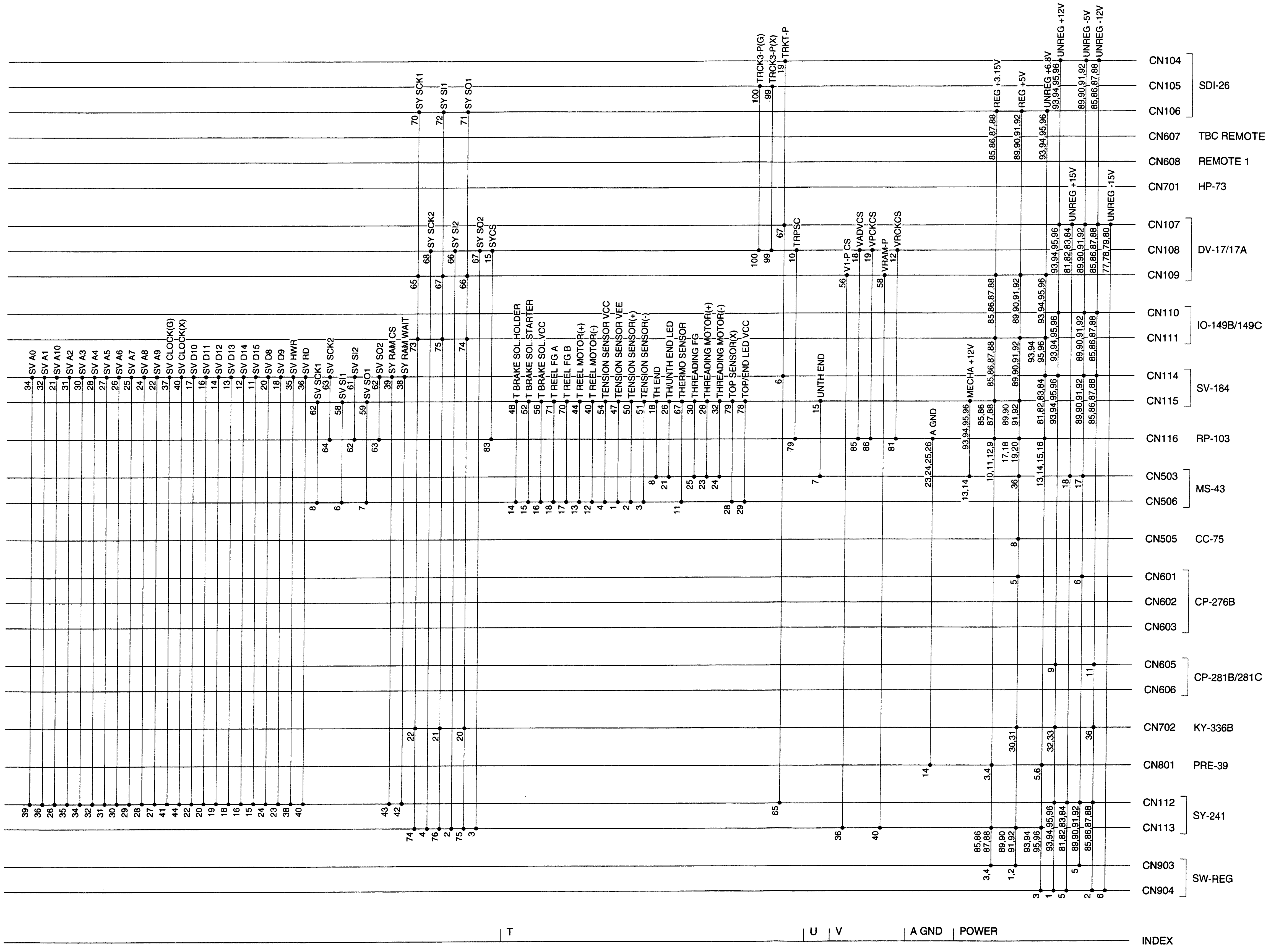

 13-167

)NY-SP0754 / DRUCK 487

DSR-60/60P

1

2

3

4

5

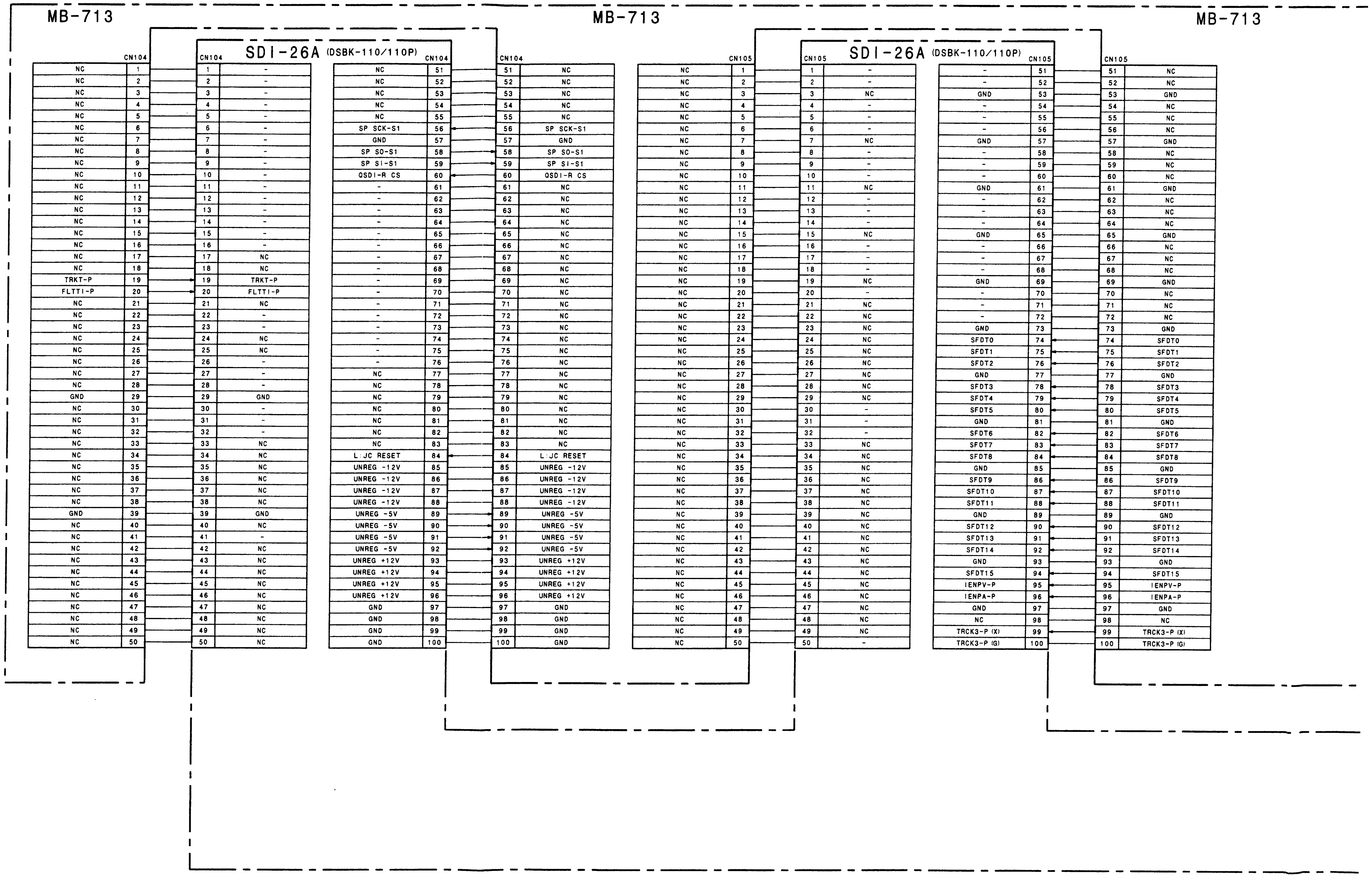

1

2

3

4

5

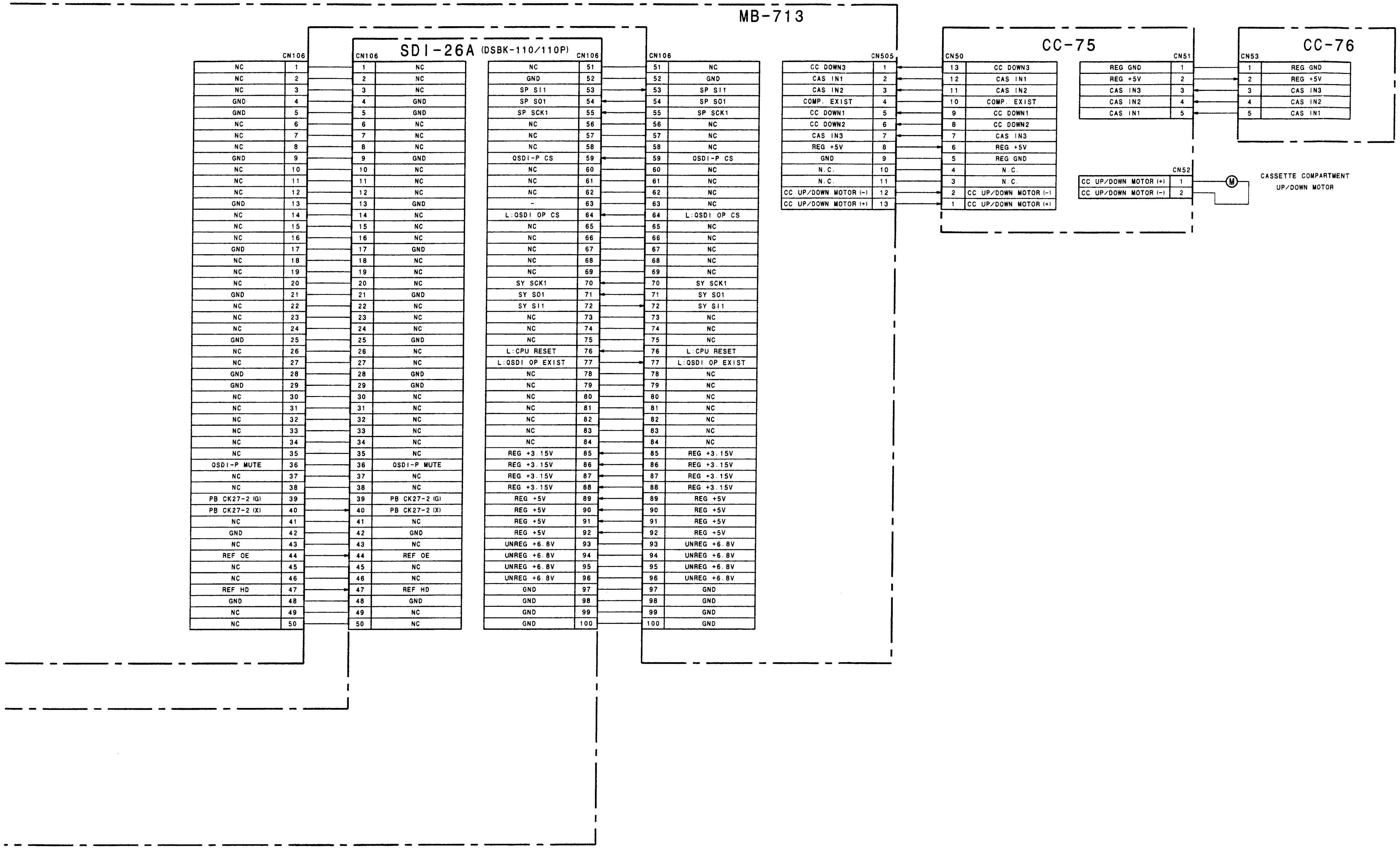

FRAME (1/5)
MODEL DSR-60/60P

FRAME (2/5)

DSR-60/60P

SDI-28 (DSBK-100/100P) CN28 — DV-17/17A CN28

SDI-28 (DSBK-100/100P)	CN28	CN28	DV-17/17A
SDI-28 EXIST	1	1	SDI OP EXIST
SDI OUT CS	2	2	SDI OUT CS
SY SO	3	3	SY SO
NC	4	4	NC
NC	5	5	NC
NC	6	6	NC
NC	7	7	NC
NC	8	8	NC
NC	9	9	NC
NC	10	10	NC
NC	11	11	NC
NC	12	12	NC
NC	13	13	NC
NC	14	14	NC
NC	15	15	NC
GND	16	16	GND
GND	17	17	GND
GND	18	18	GND
GND	19	19	GND
REG -5V	20	20	REG -5V
REG -5V	21	21	REG -5V
REG +3V	22	22	REG +3V
REG +3V	23	23	REG +3V
REG +5V	24	24	REG +5V
REG +5V	25	25	REG +5V
NC	26	26	NC
NC	27	27	NC
NC	28	28	NC
CK27 (X)	29	29	CK27 (X)
MPX SDI0-P	30	30	MPX SDI0-P
MPX SDI2-P	31	31	MPX SDI2-P
MPX SDI4-P	32	32	MPX SDI4-P
MPX SDI6-P	33	33	MPX SDI6-P
MPX SDI8-P	34	34	MPX SDI8-P
CPU RESET	35	35	CPU RESET
SY SCK	36	36	SY SCK
SY SI	37	37	SY SI
H:NTSC	38	38	L:PAL
NC	39	39	NC
NC	40	40	NC
NC	41	41	NC
NC	42	42	NC
SDI A 128FS	43	43	SDI A 128FS
SDI A BCK	44	44	SDI A BCK
SDI A LRCK	45	45	SDI A LRCK
SDI A DT3/4	46	46	SDI A DT3/4
SDI A DT1/2	47	47	SDI A DT1/2
NC	48	48	NC
NC	49	49	NC
GND	50	50	GND
GND	51	51	GND
GND	52	52	GND
GND	53	53	GND
REG -5V	54	54	REG -5V
REG -5V	55	55	REG -5V
REG +3V	56	56	REG +3V
REG +3V	57	57	REG +3V
REG +5V	58	58	REG +5V
REG +5V	59	59	REG +5V
NC	60	60	NC
FH	61	61	FH
REF OE	62	62	REF OE
CK27 (G)	63	63	CK27 (G)
MPX SDI1-P	64	64	MPX SDI1-P
MPX SDI3-P	65	65	MPX SDI3-P
MPX SDI5-P	66	66	MPX SDI5-P
MPX SDI7-P	67	67	MPX SDI7-P
MPX SDI9-P	68	68	MPX SDI9-P

MB-713 CN107 — DV-17/17A CN107

MB-713	CN107	CN107	DV-17/17A
GND	1	1	GND
AUDIO CH4 OUTPUT (Y)	2	2	AUDIO CH4 OUTPUT (Y)
AUDIO CH4 OUTPUT (X)	3	3	AUDIO CH4 OUTPUT (X)
AUDIO CH4 OUTPUT (G)	4	4	AUDIO CH4 OUTPUT (G)
GND	5	5	GND
AUDIO CH3 OUTPUT (Y)	6	6	AUDIO CH3 OUTPUT (Y)
AUDIO CH3 OUTPUT (X)	7	7	AUDIO CH3 OUTPUT (X)
AUDIO CH3 OUTPUT (G)	8	8	AUDIO CH3 OUTPUT (G)
GND	9	9	GND
AUDIO CH2 OUTPUT (Y)	10	10	AUDIO CH2 OUTPUT (Y)
AUDIO CH2 OUTPUT (X)	11	11	AUDIO CH2 OUTPUT (X)
AUDIO CH2 OUTPUT (G)	12	12	AUDIO CH2 OUTPUT (G)
GND	13	13	GND
AUDIO CH1 OUTPUT (Y)	14	14	AUDIO CH1 OUTPUT (Y)
AUDIO CH1 OUTPUT (X)	15	15	AUDIO CH1 OUTPUT (X)
AUDIO CH1 OUTPUT (G)	16	16	AUDIO CH1 OUTPUT (G)
GND	17	17	GND
AUDIO MONI. OUTPUT (X)	18	18	AUDIO MONI. OUTPUT (X)
AUDIO MONI. OUTPUT (G)	19	19	AUDIO MONI. OUTPUT (G)
GND	20	20	GND
GND	21	21	GND
NC	22	22	NC
HEADPHONE VR (G)	23	23	HEADPHONE VR (G)
HEADPHONE CH1 VR (X)	24	24	HEADPHONE CH1 VR (X)
GND	25	25	GND
HEADPHONE CH2 VR (X)	26	26	HEADPHONE CH2 VR (X)
NC	27	27	NC
NC	28	28	NC
NC	29	29	NC
NC	30	30	NC
NC	31	31	NC
NC	32	32	NC
NC	33	33	NC
AUDIO OUTPUT MUTE	34	34	AUDIO OUTPUT MUTE
AUDIO RC-P1 MUTE	35	35	AUDIO RC-P1 MUTE
AUDIO RC-P2 MUTE	36	36	AUDIO RC-P2 MUTE
NC	37	37	NC
AUDIO PB RESET	38	38	AUDIO PB RESET
NC	39	39	NC
NC	40	40	NC
NC	41	41	NC
GND	42	42	GND
AUD SFY CS	43	43	AUD SFY CS
AUD JOG CS	44	44	AUD JOG CS
NC	45	45	NC
AUD P1 CS	46	46	AUD P1 CS
AUD P2 CS	47	47	AUD P2 CS
FS CONT-P CS	48	48	FS CONT-P CS
NC	49	49	NC
DSP P1 CS	50	50	DSP P1 CS

DV-17/17A	CN107	CN107	MB-713
DSP P2 CS	51	51	DSP P2 CS
DSP-P1 XLAT	52	52	DSP-P1 XLAT
NC	53	53	NC
DSP-P2 XLAT	54	54	DSP-P2 XLAT
L:DSP-P1 MUTE	55	55	L:DSP-P1 MUTE
L:DSP-P2 MUTE	56	56	L:DSP-P2 MUTE
NC	57	57	NC
SP SCKO	58	58	SP SCKO
SP SOO	59	59	SP SOO
SP SIO	60	60	SP SIO
NC	61	61	NC
DSP-P READY	62	62	DSP-P READY
-	63	63	NC
NC	64	64	NC
FLTT1-P	65	65	FLTT1-P
FLTT0-P	66	66	FLTT0-P
TRKT-P	67	67	TRKT-P
SFY-P TBC EN	68	68	SFY-P TBC EN
NC	69	69	NC
SFY-P BANK	70	70	SFY-P BANK
NC	71	71	NC
L:JC RESET	72	72	L:JC RESET
NC	73	73	NC
NC	74	74	NC
NC	75	75	NC
L:CTLD RESET	76	76	L:CTLD RESET
UNREG -15V	77	77	UNREG -15V
UNREG -15V	78	78	UNREG -15V
UNREG -15V	79	79	UNREG -15V
UNREG -15V	80	80	UNREG -15V
UNREG +15V	81	81	UNREG +15V
UNREG +15V	82	82	UNREG +15V
UNREG +15V	83	83	UNREG +15V
UNREG +15V	84	84	UNREG +15V
UNREG -12V	85	85	UNREG -12V
UNREG -12V	86	86	UNREG -12V
UNREG -12V	87	87	UNREG -12V
UNREG -12V	88	88	UNREG -12V
UNREG -5V	89	89	UNREG -5V
UNREG -5V	90	90	UNREG -5V
UNREG -5V	91	91	UNREG -5V
UNREG -5V	92	92	UNREG -5V
UNREG +12V	93	93	UNREG +12V
UNREG +12V	94	94	UNREG +12V
UNREG +12V	95	95	UNREG +12V
UNREG +12V	96	96	UNREG +12V
GND	97	97	GND
GND	98	98	GND
GND	99	99	GND
GND	100	100	GND

MB-713 CN108 — DV-17/17A CN108

MB-713	CN108	CN108	DV-17/17A
GND	1	1	GND
NC	2	2	NC
NC	3	3	NC
NC	4	4	NC
GND	5	5	GND
NC	6	6	NC
PB SW REF	7	7	PB SW REF
GND	8	8	GND
GND	9	9	GND
TRPSC	10	10	TRPSC
FRPSC	11	11	FRPSC
VRCKCS	12	12	VRCKCS
GND	13	13	GND
NC	14	14	NC
SYCS	15	15	SYCS
SCDVCS	16	16	SCDVCS
GND	17	17	GND
VADVCS	18	18	VADVCS
VPCKCS	19	19	VPCKCS
GND	20	20	GND
GND	21	21	GND
DTCS0	22	22	DTCS0
DTCS1	23	23	DTCS1
DTCS2	24	24	DTCS2
GND	25	25	GND
DTCS3	26	26	DTCS3
DTCS4	27	27	DTCS4
DTCS5	28	28	DTCS5
GND	29	29	GND
DTCS6	30	30	DTCS6
DTCS7	31	31	DTCS7
DRCKREF	32	32	DRCKREF
GND	33	33	GND
SPCK3	34	34	SPCK3
GND	35	35	GND
GND	36	36	GND
NC	37	37	NC
NC	38	38	NC
NC	39	39	NC
JOG SPEED	40	40	JOG SPEED
NC	41	41	NC
NC	42	42	NC
NC	43	43	NC
NC	44	44	NC
NC	45	45	NC
NC	46	46	NC
NC	47	47	NC
NC	48	48	NC
NC	49	49	NC
NC	50	50	NC

DV-17/17A	CN108
NC	51
NC	52
NC	53
NC	54
NC	55
NC	56
NC	57
NC	58
NC	59
NC	60
NC	61
NC	62
NC	63
NC	64
NC	65
SY SI2	66
SY SO2	67
SY SCK2	68
NC	69
CTLG-P MOD CS	70
CTLG-P SP CS	71
CTLG SUB-P CS	72
GND	73
GND	74
IENPV-P	75
IENPA-P	76
GND	77
SFDT0	78
SFDT1	79
SFDT2	80
GND	81
SFDT3	82
SFDT4	83
SFDT5	84
GND	85
SFDT6	86
SFDT7	87
SFDT8	88
GND	89
SFDT9	90
SFDT10	91
SFDT11	92
GND	93
SFDT12	94
SFDT13	95
SFDT14	96
GND	97
SFDT15	98
TRCK3-P (X)	99
TRCK3-P (G)	100

 FRAME (2/5)

DSR-60/60P

1 2 3 4 5

MB-713

CN108			CN109
51	NC	GND	1
52	NC	GND	2
53	NC	PB SETUP ADD	3
54	NC	D/A Y DATA0	4
55	NC	GND	5
56	NC	D/A Y DATA1	6
57	NC	D/A Y DATA2	7
58	NC	D/A Y DATA3	8
59	NC	GND	9
60	NC	D/A Y DATA4	10
61	NC	D/A Y DATA5	11
62	NC	D/A Y DATA6	12
63	NC	GND	13
64	NC	D/A Y DATA7	14
65	NC	D/A Y DATA8	15
66	SY SI2	D/A Y DATA9	16
67	SY SO2	GND	17
68	SY SCK2	ACLK	18
69	NC	D/A C DATA0	19
70	CTLG-P MOD CS	D/A C DATA1	20
71	CTLG-P SP CS	GND	21
72	CTLG SUB-P CS	D/A C DATA2	22
73	GND	D/A C DATA3	23
74	GND	D/A C DATA4	24
75	IENPV-P	GND	25
76	IENPA-P	D/A C DATA5	26
77	GND	D/A C DATA6	27
78	SFDT0	D/A C DATA7	28
79	SFDT1	GND	29
80	SFDT2	D/A MPX	30
81	GND	SETUP POSITION	31
82	SFDT3	NC	32
83	SFDT4	GND	33
84	SFDT5	NC	34
85	GND	NC	35
86	SFDT6	PB HCK (G)	36
87	SFDT7	PB CK27 (G)	37
88	SFDT8	PB HCK (X)	38
89	GND	PB CK27 (X)	39
90	SFDT9	NC	40
91	SFDT10	GND	41
92	SFDT11	NC	42
93	GND	NC	43
94	SFDT12	NC	44
95	SFDT13	RFH	45
96	SFDT14	RF OE	46
97	GND	REF OE	47
98	SFDT15	REF VD	48
99	TRCK3-P (X)	REF HD	49
100	TRCK3-P (G)	L:SDI OUT OP CS	50

DV-17/17A

CN109			CN109
1	GND	SP SI1	51
2	GND	SP SO2	52
3	PB SETUP ADD	SP SCK1	53
4	D/A Y DATA0	SFY-PSP CS	54
5	GND	NFIL-P CS	55
6	D/A Y DATA1	V1-P CS	56
7	D/A Y DATA2	JUST-PCS	57
8	D/A Y DATA3	VRAM-P	58
9	GND	SFY-P MS CS	59
10	D/A Y DATA4	DA-P1 XLAT	60
11	D/A Y DATA5	DA-P2 XLAT	61
12	D/A Y DATA6	NC	62
13	GND	RC-P1 XLAT	63
14	D/A Y DATA7	RC-P2 XLAT	64
15	D/A Y DATA8	SY SCK1	65
16	D/A Y DATA9	SY SO1	66
17	GND	SY SI1	67
18	ACLK	L:SDI OUT OP EXIST	68
19	D/A C DATA0	L:CPU RESET	69
20	D/A C DATA1	L:QSDI OP EXIST	70
21	GND	CC-F1	71
22	D/A C DATA2	CC-F2	72
23	D/A C DATA3	NC	73
24	D/A C DATA4	NC	74
25	GND	-	75
26	D/A C DATA5	NC	76
27	D/A C DATA6	NC	77
28	D/A C DATA7	NC	78
29	GND	NC	79
30	D/A MPX	NC	80
31	SETUP POSITION	NC	81
32	NC	NC	82
33	GND	NC	83
34	NC	NC	84
35	NC	REG +3.15V	85
36	-	REG +3.15V	86
37	PB CK27 (G)	REG +3.15V	87
38	PB HCK (X)	REG +3.15V	88
39	PB CK27 (X)	REG +5V	89
40	-	REG +5V	90
41	GND	REG +5V	91
42	NC	REG +5V	92
43	NC	UNREG +6.8V	93
44	NC	UNREG +6.8V	94
45	RFH	UNREG +6.8V	95
46	RF OE	UNREG +6.8V	96
47	REF OE	GND	97
48	-	GND	98
49	REF HD	GND	99
50	L:SDI OUT OP CS	GND	100

MB-713

CN109	
51	SP SI1
52	SP SO2
53	SP SCK1
54	SFY-PSP CS
55	NFIL-P CS
56	V1-P CS
57	JUST-PCS
58	VRAM-P
59	SFY-P MS CS
60	DA-P1 XLAT
61	DA-P2 XLAT
62	NC
63	RC-P1 XLAT
64	RC-P2 XLAT
65	SY SCK1
66	SY SO1
67	SY SI1
68	L:SDI OUT OP EXIST
69	L:CPU RESET
70	L:QSDI OP EXIST
71	CC-F1
72	CC-F2
73	NC
74	NC
75	REF CF PULSE
76	NC
77	NC
78	NC
79	NC
80	NC
81	NC
82	NC
83	NC
84	NC
85	REG +3.15V
86	REG +3.15V
87	REG +3.15V
88	REG +3.15V
89	REG +5V
90	REG +5V
91	REG +5V
92	REG +5V
93	UNREG +6.8V
94	UNREG +6.8V
95	UNREG +6.8V
96	UNREG +6.8V
97	GND
98	GND
99	GND
100	GND

DV-17/17A — PD-82

DV-17/17A	CN1	CN1	PD-82
NC	1	1	NC
READ FRSQ1	2	2	READ FRSQ1
NC	3	3	NC
FRAME SEQUENCE	4	4	FRAME SEQUENCE
NC	5	5	NC
JOG RESET	6	6	JOG RESET
NC	7	7	NC
ERROR FLAG	8	8	ERROR FLAG
NC	9	9	NC
ASFY DATA	10	10	ASFY DATA
NC	11	11	NC
ASFY START	12	12	ASFY START
NC	13	13	NC
REG GND	14	14	REG GND
NC	15	15	NC
TRCK	16	16	TRCK
NC	17	17	NC
REG GND	18	18	REG GND
NC	19	19	NC
SADT	20	20	SADT
NC	21	21	NC
START	22	22	START
NC	23	23	NC
FLTT	24	24	FLTT
NC	25	25	NC
TRKT	26	26	TRKT
NC	27	27	NC
JOG BANK	28	28	JOG BANK
NC	29	29	NC
XRST	30	30	XRST
NC	31	31	NC
REG GND	32	32	REG GND
NC	33	33	NC
NC	34	34	NC
NC	35	35	NC
NC	36	36	NC
NC	37	37	NC
NC	38	38	NC
NC	39	39	NC
NC	40	40	NC
NC	41	41	NC
NC	42	42	NC
NC	43	43	NC
NC	44	44	NC
NC	45	45	NC
NC	46	46	NC
NC	47	47	NC
NC	48	48	NC
NC	49	49	NC
NC	50	50	NC
NC	51	51	NC
NC	52	52	NC
REG +5V	53	53	REG +5V
REG +5V	54	54	REG +5V
REG +3V	55	55	REG +3V
REG +3V	56	56	REG +3V
REG GND	57	57	REG GND
REG GND	58	58	REG GND
REG GND	59	59	REG GND
REG GND	60	60	REG GND

FRAME (2/5)
MODEL DSR-60/60P

 13-171

I J K L M N O P

ONY-SP0754 / DRUCK 491

DSR-60/60P

1

2

3

4

5

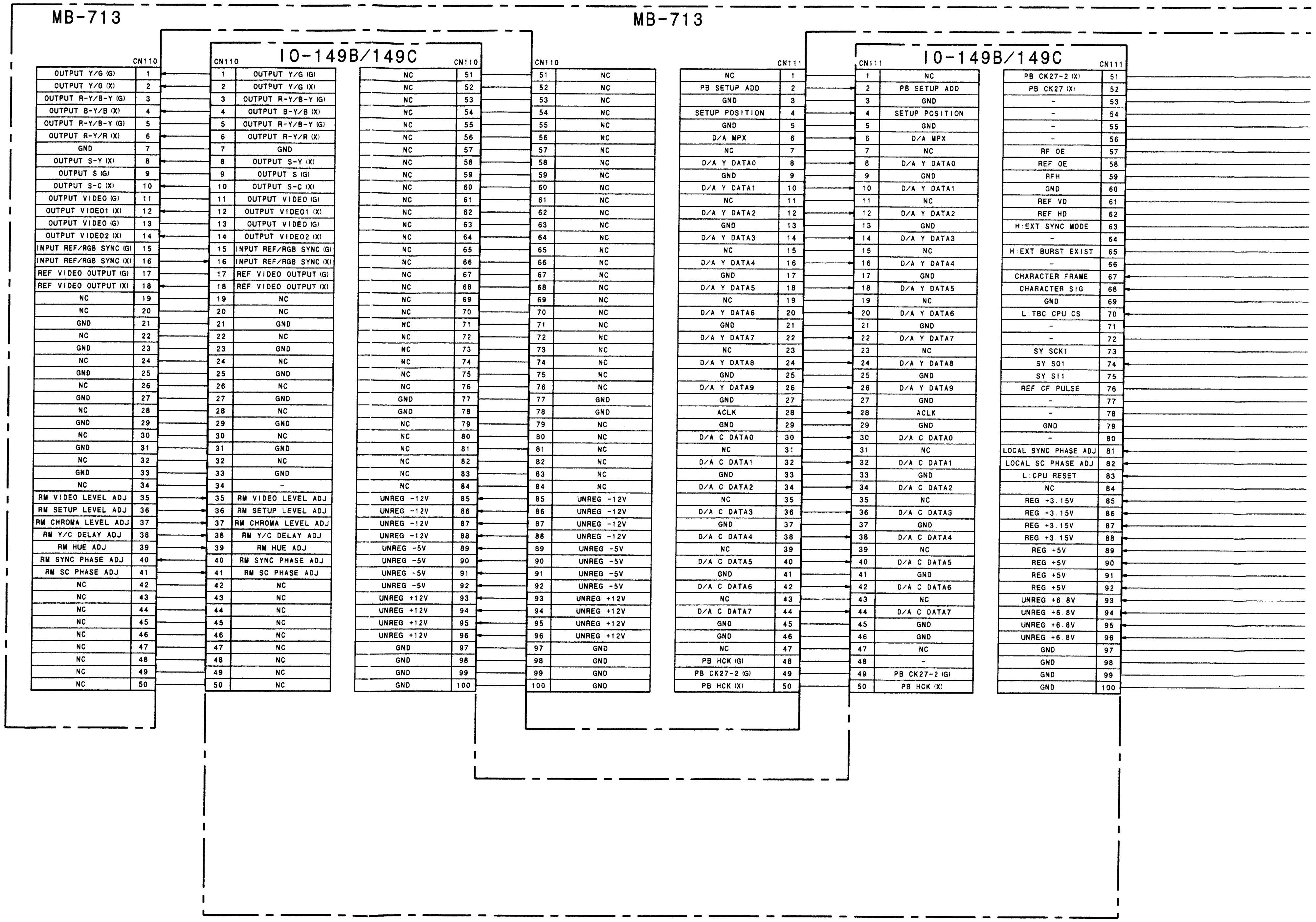

A B C D E F G H

SONY-SP0754 / DRUCK 492

DSR-60/60P

1

2

3

4

5

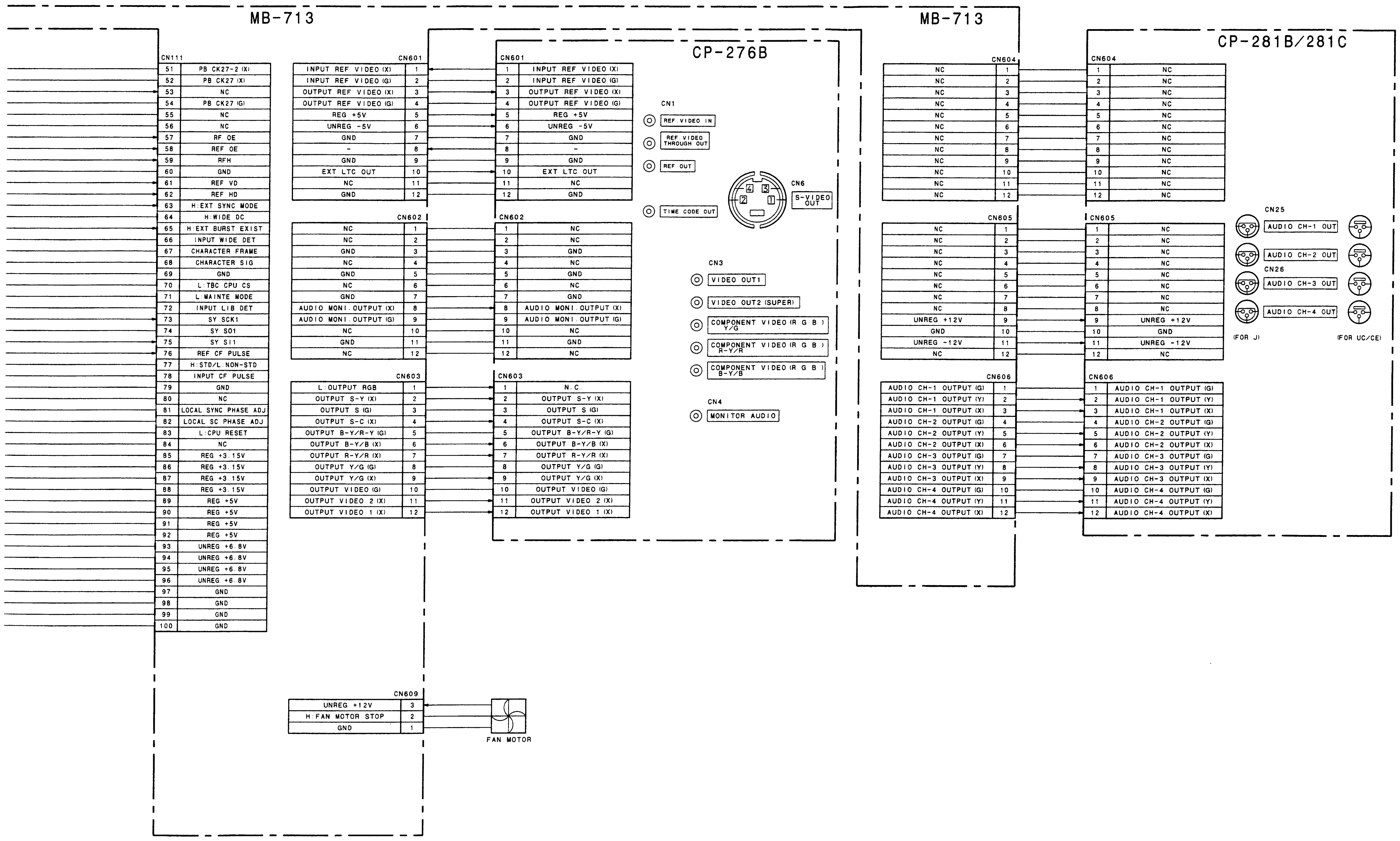

FRAME (3/5)
MODEL DSR-60/60P

DSR-60/60P

TC-90 (DSBK-130/130P) CN1 — SY-241B CN1

TC-90	CN1	CN1	SY-241B
TC A0	1	1	TC A0
TC A2	2	2	TC A2
TC A4	3	3	TC A4
TC D0	4	4	TC D0
TC D2	5	5	TC D2
TC D4	6	6	TC D4
TC D6	7	7	TC D6
SY CK	8	8	SY CK
L:TC RD	9	9	L:TC RD
TC WAIT	10	10	TC WAIT
TC EXIST	11	11	TC EXIST
L:TC RESET	12	12	L:TC RESET
REG -5V	13	13	REG -5V
GND	14	14	GND
REG +5V	15	15	REG +5V
LTC GND	16	16	LTC GND
LTC IN	17	17	LTC IN
TC A1	18	18	TC A1
TC A3	19	19	TC A3
TC A5	20	20	TC A5
TC D1	21	21	TC D1
TC D3	22	22	TC D3
TC D5	23	23	TC D5
TC D7	24	24	TC D7
L:TC CS	25	25	L:TC CS
L:TC WR	26	26	L:TD WR
TC INT	27	27	TC INT
RSG OE	28	28	RF OE
H:NTSC/L:PAL	29	29	H:NTSC/L:PAL
REG -5V	30	30	REG -5V
GND	31	31	GND
REG +5V	32	32	REG +5V
LTC GND	33	33	LTC GND
LTC OUT	34	34	LTC OUT

SY-241B CN2

CN2	
1	UNREG +12V
2	UNREG GND
3	JIG SCK
4	JIG SI
5	JIG SO
6	L:JIG CS
7	RF OE

MB-713 CN112 — SY-241B CN112 (1–50)

MB-713	CN112	CN112	SY-241B
EXT LTC OUTPUT	1	1	EXT LTC OUTPUT
EXT LTC GND	2	2	EXT LTC GND
EXT LTC INPUT	3	3	EXT LTC INPUT
NC	4	4	-
L:OUTPUT RGB	5	5	L:OUTPUT RGB
RM TX (+)	6	6	RM TX (+)
RM TX (-)	7	7	RM TX (-)
RM RX (+)	8	8	RM RX (+)
RM RX (-)	9	9	RM RX (-)
AUDIO OUTPUT MUTE	10	10	AUDIO OUTPUT MUTE
AUDIO RC-P1 MUTE	11	11	AUDIO RC-P1 MUTE
AUDIO RC-P2 MUTE	12	12	AUDIO RC-P2 MUTE
AUDIO PB RESET	13	13	AUDIO PB RESET
AUD SFY CS	14	14	AUD SFY CS
SV D15	15	15	SV D15
SV D14	16	16	SV D14
1/2VD	17	17	1/2VD
SV D13	18	18	SV D13
SV D12	19	19	SV D12
SV D11	20	20	SV D11
REF 150	21	21	REF 150
SV D10	22	22	SV D10
SV D9	23	23	SV D9
SV D8	24	24	SV D8
H:NTSC/L:PAL	25	25	H:NTSC/L:PAL
SV A10	26	26	SV A10
SV A9	27	27	SV A9
SV A8	28	28	SV A8
SV A7	29	29	SV A7
SV A6	30	30	SV A6
SV A5	31	31	SV A5
SV A4	32	32	SV A4
H:RECORDER	33	33	H:RECORDER
SV A3	34	34	SV A3
SV A2	35	35	SV A2
SV A1	36	36	SV A1
GND	37	37	GND
SV HWR	38	38	SV HWR
SV A0	39	39	SV A0
SV RD	40	40	SV RD
SV CLOCK (G)	41	41	SV CLOCK (G)
SY RAM WAIT	42	42	SY RAM WAIT
SY RAM CS	43	43	SY RAM CS
SV LOCK (X)	44	44	SV LOCK (X)
NC	45	45	-
L:CPU RESET	46	46	L:CPU RESET
AUD JOG CS	47	47	AUD JOG CS
AUD P1 CS	48	48	AUD P1 CS
NC	49	49	NC
AUD P2 CS	50	50	AUD P2 CS

SY-241B CN112 — MB-713 CN112 (51–100)

SY-241B	CN112	CN112	MB-713
FS CONT-P CS	51	51	FS CONT-P CS
DSP P1 CS	52	52	DSP P1 CS
DSP P2 CS	53	53	DSP P2 CS
DSP-P1 XLAT	54	54	DSP-P1 XLAT
DSP-P2 XLAT	55	55	DSP-P2 XLAT
L:DSP P1 MUTE	56	56	L:DSP P1 MUTE
L:DSP-P2 MUTE	57	57	L:DSP-P2 MUTE
SP SCKO	58	58	SP SCKO
SP SOO	59	59	SP SOO
SP SIO	60	60	SP SIO
DSP-P READY	61	61	DSP-P READY
-	62	62	NC
FLTT1-P	63	63	FLTT1-P
FLTTO-P	64	64	FLTTO-P
TRKT-P	65	65	TRKT-P
SFY-P BANK	66	66	SFY-P BANK
FRAME PULSE	67	67	FRAME PULSE
L:JC RESET	68	68	L:JC RESET
SP SCK-S1	69	69	SP SCK-S1
SP SO-S1	70	70	SP SO-S1
SP SI-S1	71	71	SP SI-S1
QSDI-P CS	72	72	QSDI-P CS
L:CTLG RESET	73	73	L:CTLG RESET
-	74	74	NC
-	75	75	NC
-	76	76	NC
-	77	77	NC
-	78	78	NC
-	79	79	NC
REF CF PULSE	80	80	REF CF PULSE
-	81	81	UNREG +15V
-	82	82	UNREG +15V
-	83	83	UNREG +15V
-	84	84	UNREG +15V
-	85	85	UNREG -12V
-	86	86	UNREG -12V
-	87	87	UNREG -12V
-	88	88	UNREG -12V
UNREG -5V	89	89	UNREG -5V
UNREG -5V	90	90	UNREG -5V
UNREG -5V	91	91	UNREG -5V
UNREG -5V	92	92	UNREG -5V
UNREG +12V	93	93	UNREG +12V
UNREG +12V	94	94	UNREG +12V
UNREG +12V	95	95	UNREG +12V
UNREG +12V	96	96	UNREG +12V
GND	97	97	GND
GND	98	98	GND
GND	99	99	GND
GND	100	100	GND

MB-713 CN113 — SY-241B CN113 (1–50)

MB-713	CN113	CN113	SY-241B
NC	1	1	NC
SY SI2	2	2	SY SI2
SY SO2	3	3	SY SO2
SY SCK2	4	4	SY SCK2
NC	5	5	NC
CTLG-P MOD CS	6	6	CTLG-P MOD CS
CTLG-P SP CS	7	7	CTLG-P SP CS
CTLG SUB-P CS	8	8	CTLG SUB-P CS
NC	9	9	NC
NC	10	10	-
NC	11	11	-
NC	12	12	NC
RF OE	13	13	RF OE
REF VD	14	14	REF VD
REF HD	15	15	REF HD
H:WIDE DC	16	16	H:WIDE DC
INPUT WIDE DET	17	17	INPUT WIDE DET
CHARACTER FRAME	18	18	CHARACTER FRAME
CHARACTER SIG	19	19	CHARACTER SIG
L:TBC CPU CS	20	20	L:TBC CPU CS
NC	21	21	NC
L:MAINTE MODE	22	22	L:MAINTE MODE
INPUT LTB DET	23	23	INPUT LTB DET
CC-F1	24	24	CC-F1
NC	25	25	NC
L:KY CS	26	26	L:KY CS
NC	27	27	NC
L:SDI OUT OPCS	28	28	L:SDI OUT OPCS
NC	29	29	NC
SP SI1	30	30	SP SI1
SP SO1	31	31	SP SO1
SP SCK1	32	32	SP SCK1
SFY-P MS CS	33	33	SFY-P MS CS
SFY-P SP CS	34	34	SFY-P SP CS
NFIL-P CS	35	35	NFIL-P CS
V1-P CS	36	36	V1-P CS
QSDI-P MUTE	37	37	QSDI-P MUTE
JUST-P CS	38	38	JUST-P CS
QSDI-P CS	39	39	QSDI-P CS
VRAM-P	40	40	VRAM-P
NC	41	41	NC
NC	42	42	NC
NC	43	43	NC
CC-F2	44	44	CC-F2
NC	45	45	-
L:QSDI OPCS	46	46	L:QSDI OPCS
NC	47	47	-
FIX FRP-R	48	48	FIX FRP-R
NC	49	49	-
NC	50	50	-

SY-241B CN113 — MB-713 CN113 (51–100)

SY-241B	CN113	CN113	MB-713
-	51	51	NC
-	52	52	NC
-	53	53	NC
-	54	54	NC
-	55	55	NC
-	56	56	NC
-	57	57	NC
-	58	58	NC
-	59	59	NC
-	60	60	NC
-	61	61	NC
-	62	62	NC
-	63	63	NC
-	64	64	NC
-	65	65	NC
-	66	66	NC
-	67	67	NC
NC	68	68	NC
DA-P1 XLAT	69	69	DA-P1 XLAT
NC	70	70	NC
RC-P1 XLAT	71	71	RC-P1 XLAT
RC-P2 XLAT	72	72	RC-P2 XLAT
DA-P2 XLAT	73	73	DA-P2 XLAT
SY SCK1	74	74	SY SCK1
SY SO1	75	75	SY SO1
SY SI1	76	76	SY SI1
NC	77	77	NC
-	78	78	NC
L:SDI OUT OP EXIST	79	79	L:SDI OUT OP EXIST
L:CPU RESET	80	80	L:CPU RESET
NC	81	81	NC
L:QSDI OP EXIST	82	82	L:QSDI OP EXIST
NC	83	83	NC
GND	84	84	GND
REG +3.15V	85	85	REG +3.15V
REG +3.15V	86	86	REG +3.15V
REG +3.15V	87	87	REG +3.15V
REG +3.15V	88	88	REG +3.15V
REG +5V	89	89	REG +5V
REG +5V	90	90	REG +5V
REG +5V	91	91	REG +5V
REG +5V	92	92	REG +5V
NC	93	93	UNREG +6.8V
NC	94	94	UNREG +6.8V
NC	95	95	UNREG +6.8V
NC	96	96	UNREG +6.8V
GND	97	97	GND
GND	98	98	GND
GND	99	99	GND
GND	100	100	GND

MB-713 CN503

	CN503
CAPSTAN DIR CONT	1
CAP BRAKE	2
CAPSTAN DRIVE	3
PINCH SOL. VCC	4
PINCH SOL. STARTER	5
PINCH SOL. HOLDER	6
UNTH END	7
TH END	8
CLEANING SOL. STARTER	9
CLEANING SOL. VCC	10
DEW DET (G)	11
DEW DET (X)	12
UNREG +12V	13
UNREG +12V	14
GND	15
GND	16
UNREG -5V	17
UNREG +15V	18
CLEANING SOL. HOLDER	19
NC	20
TH/UNTH END LED	21
POSITION LED	22
THREADING MOTOR (+)	23
THREADING MOTOR (-)	24
THREADING FG	25
DRUM DRIVE	26
DRUM FG	27
DRUM DIR CONT	28
DRUM CURRENT	29
DRUM PG	30
CAPSTAN FG A	31
CAPSTAN FG B	32
EEPROM-SV RESET1	33
L:MS EXIST 1	34
GND	35
REG +5V	36

MB-713 CN506

	CN506
TENSION SENSOR VEE	1
TENSION SENSOR (+)	2
TENSION SENSOR (-)	3
TENTION SENSOR VCC	4
END SENSOR (X)	5
SV SI1	6
SV SO1	7
SV SCK1	8
EE-PROM SV CS	9
EE-PROM SV BUSY	10
THERMO SENSOR	11
T REEL MOTOR (-)	12
T REEL MOTOR (+)	13
T BRAKE SOL. HOLDER	14
T BRAKE SOL. STARTER	15
T BRAKE SOL. VCC	16
T REEL FG B	17
T REEL FG A	18
S REEL MOTOR (+)	19
S REEL MOTOR (-)	20
S BRAKE SOL. HOLDER	21
S BRAKE SOL. STARTER	22
S BRAKE SOL. VCC	23
S REEL FG B	24
S REEL FG A	25
POSITION MOTOR (-)	26
POSITION MOTOR (+)	27
TOP SENSOR (X)	28
TOP/END LED VCC	29
H:S POSITION	30
H:L POSITION	31
MIC GND	32
MIC SCK	33
MIC SDA	34
MIC VCC	35
REC INH SW (X)	36

DSR-60/60P

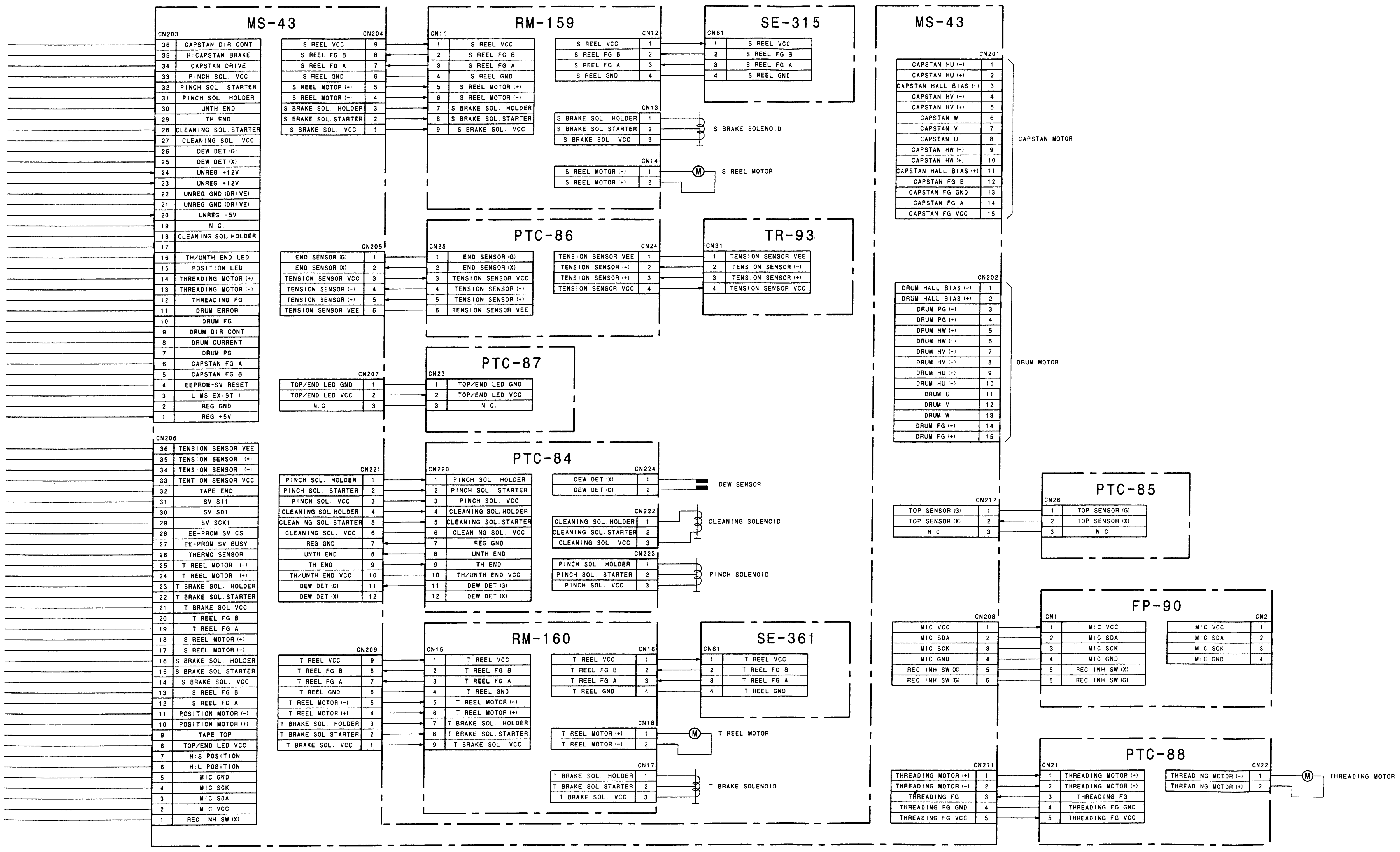

1
2
3
4
5

FRAME (4/5)
MODEL DSR-60/60P

FRAME (5/5)

DSR-60/60P

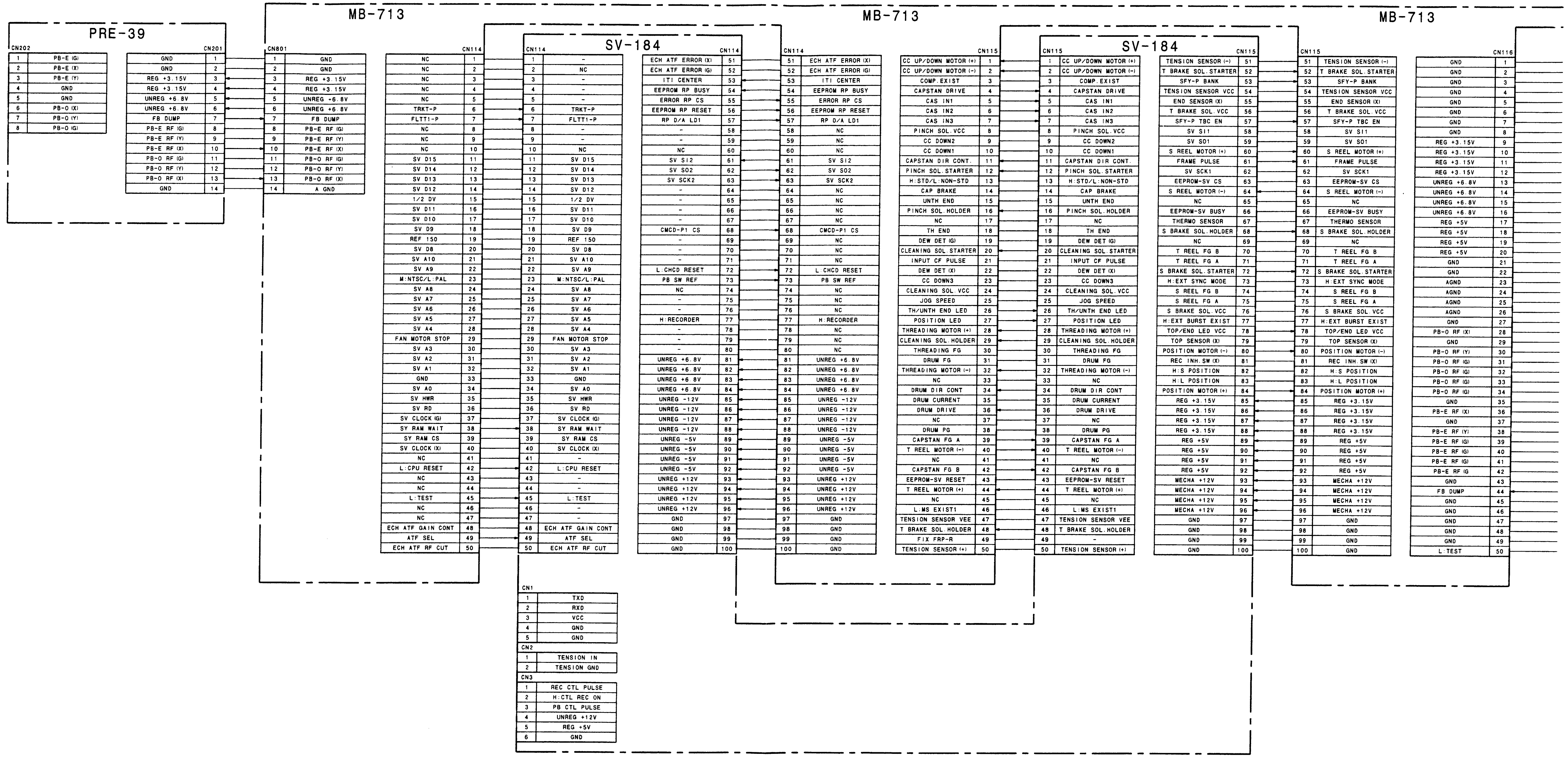

DSR-60/60P

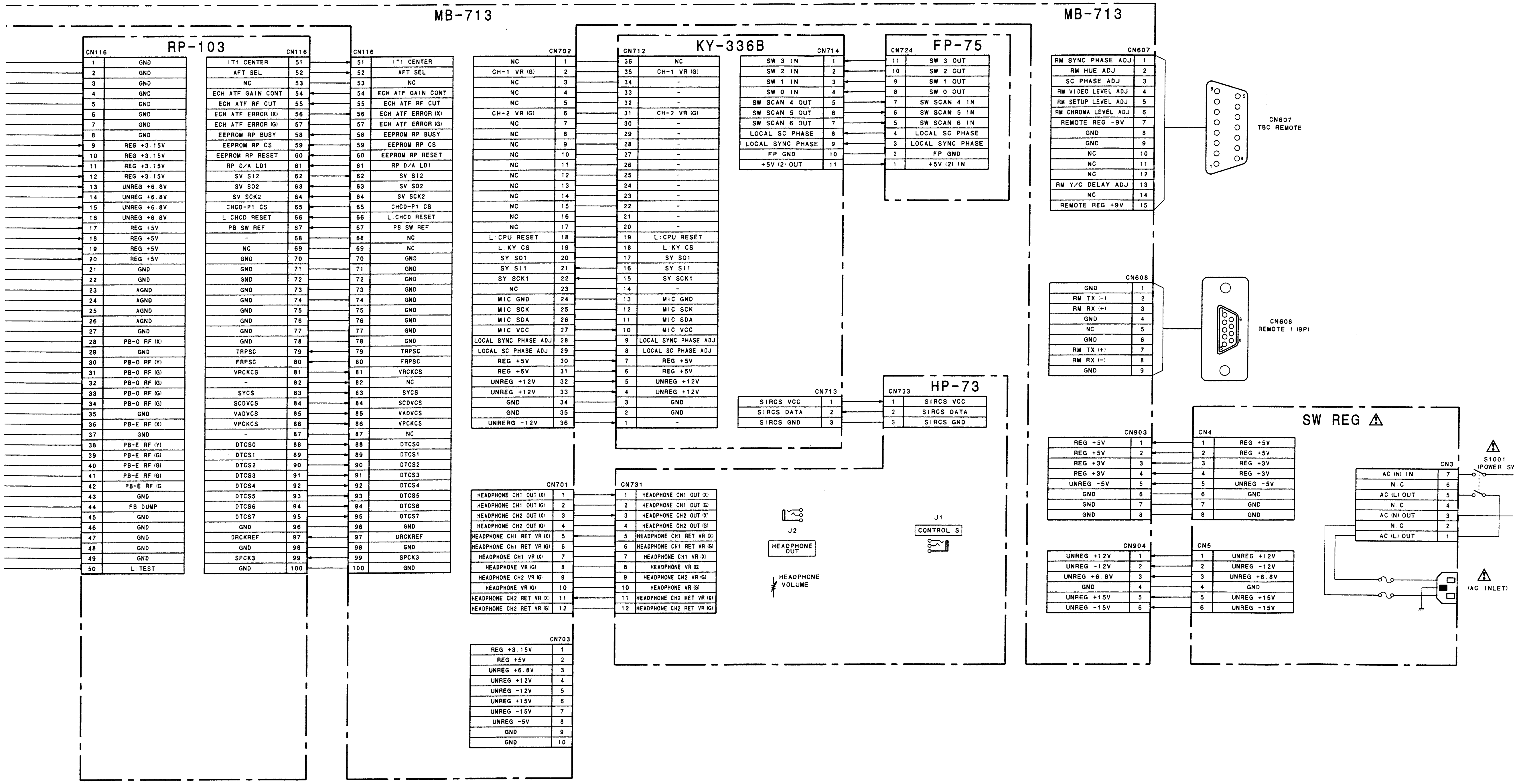

FRAME (5/5)
MODEL DSR-60/60P

DSR-80/80P

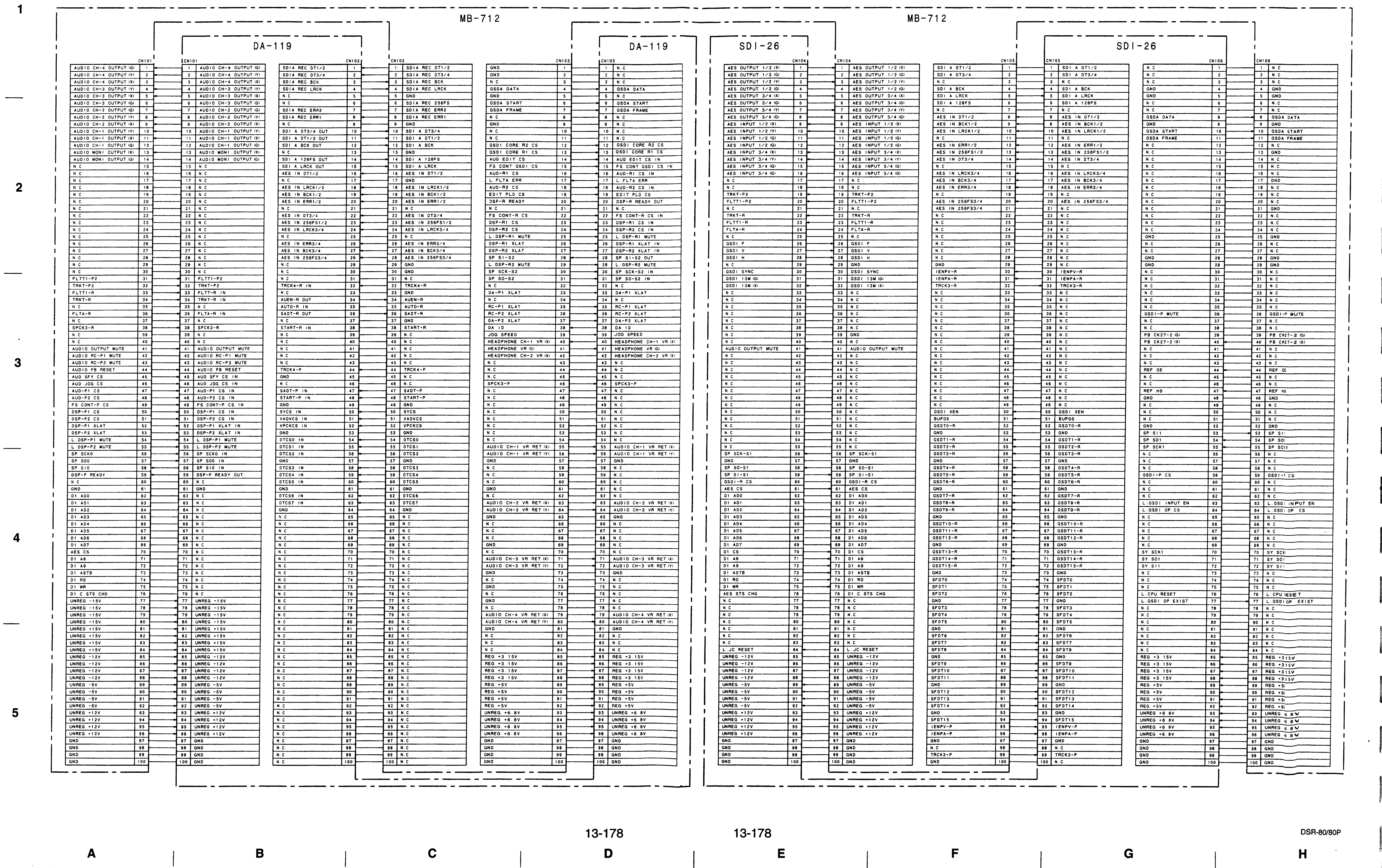

SONY-SP0754 / DRUCK 498

DSR-80/80P

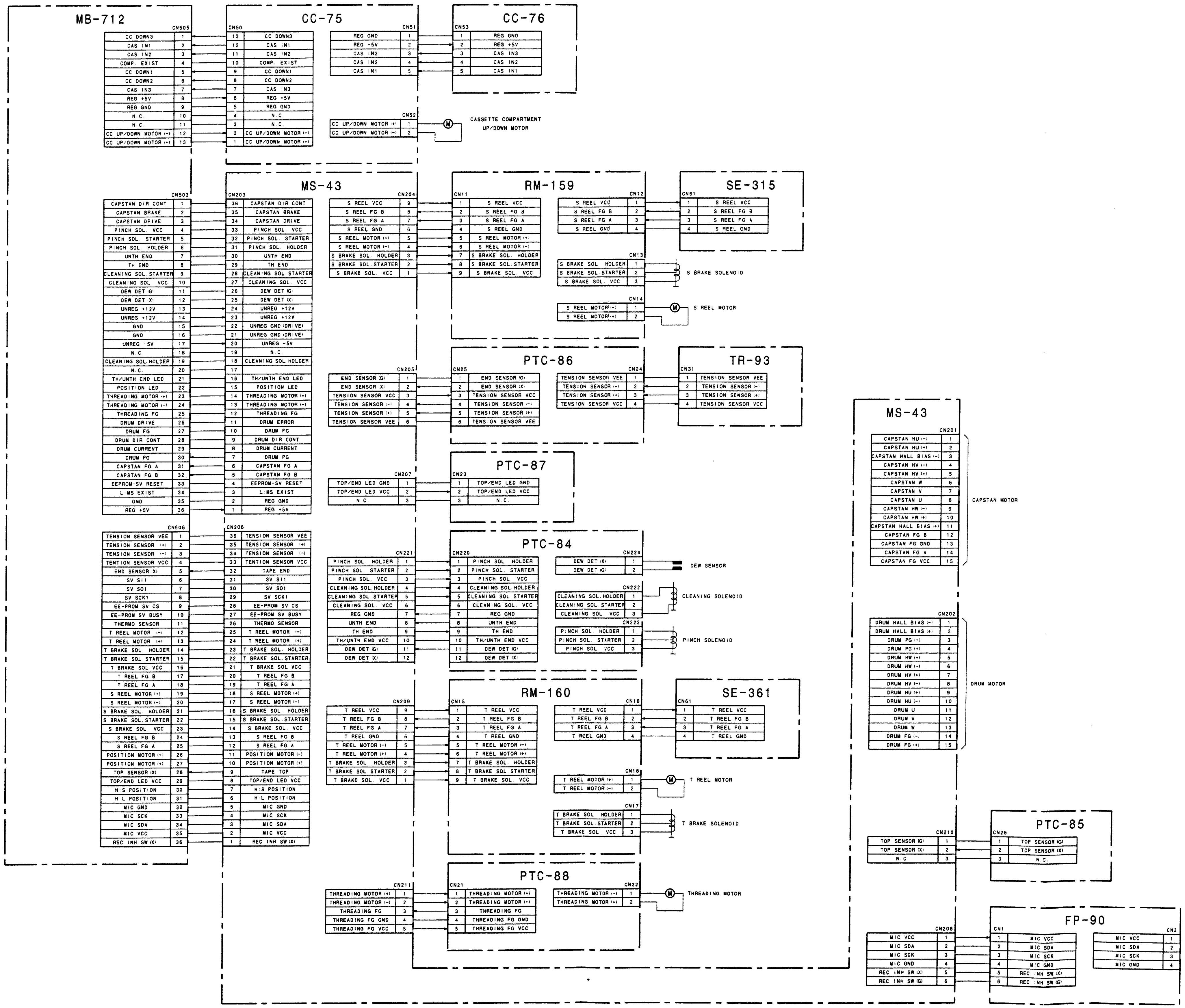

1
2
3
4
5

FRAME (1/4)

MODEL DSR-80/80P

I J K L M N O P

DSR-80/80P

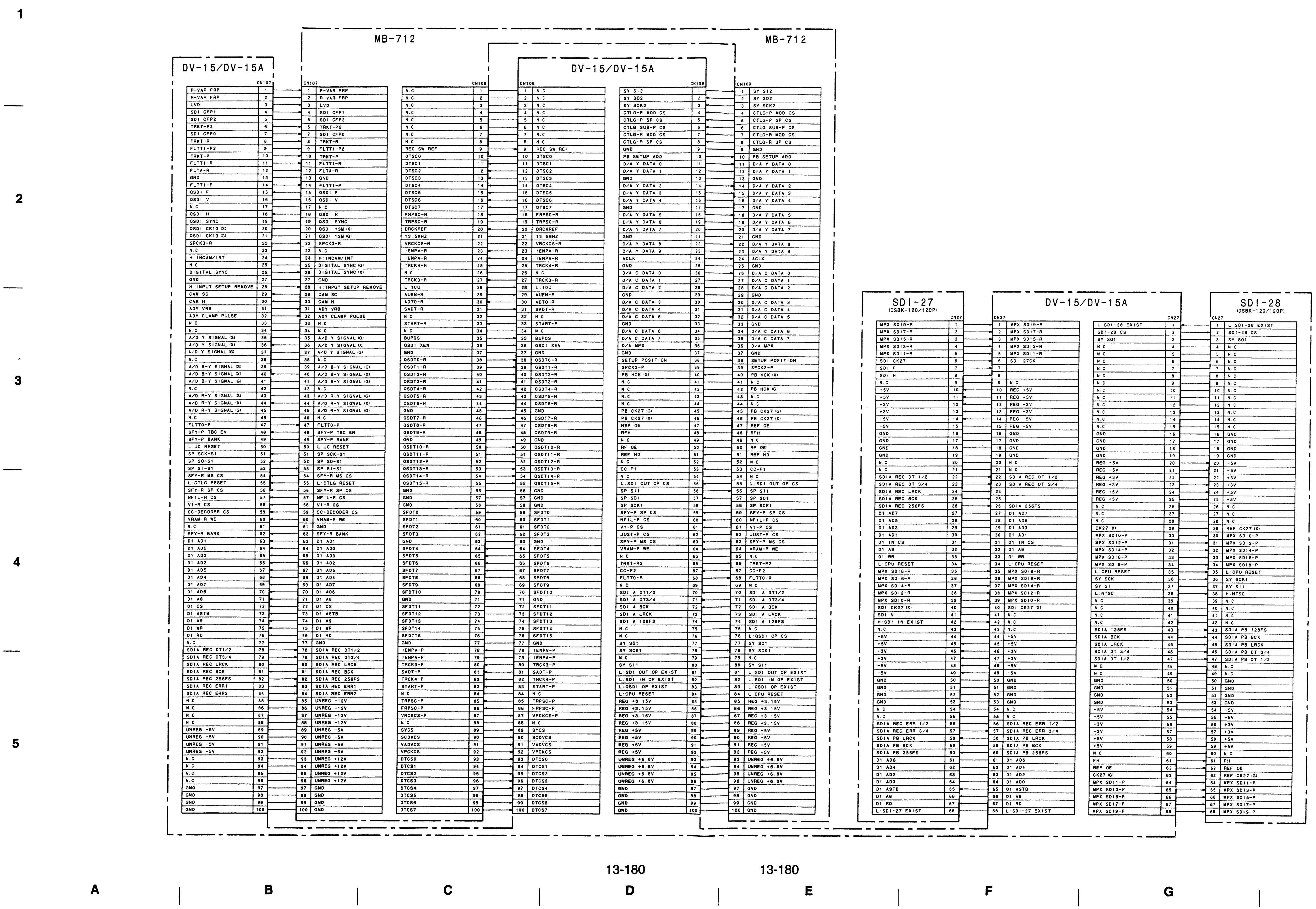
MB-712
DV-15/DV-15A
CN107
CN108
DV-15/DV-15A
CN108
CN109
MB-712
CN109
SDI-27
(DSBK-120/120P)
CN27
DV-15/DV-15A
CN27
SDI-28
(DSBK-120/120P)
CN27

DSR-80/80P

1

2

3

4

5

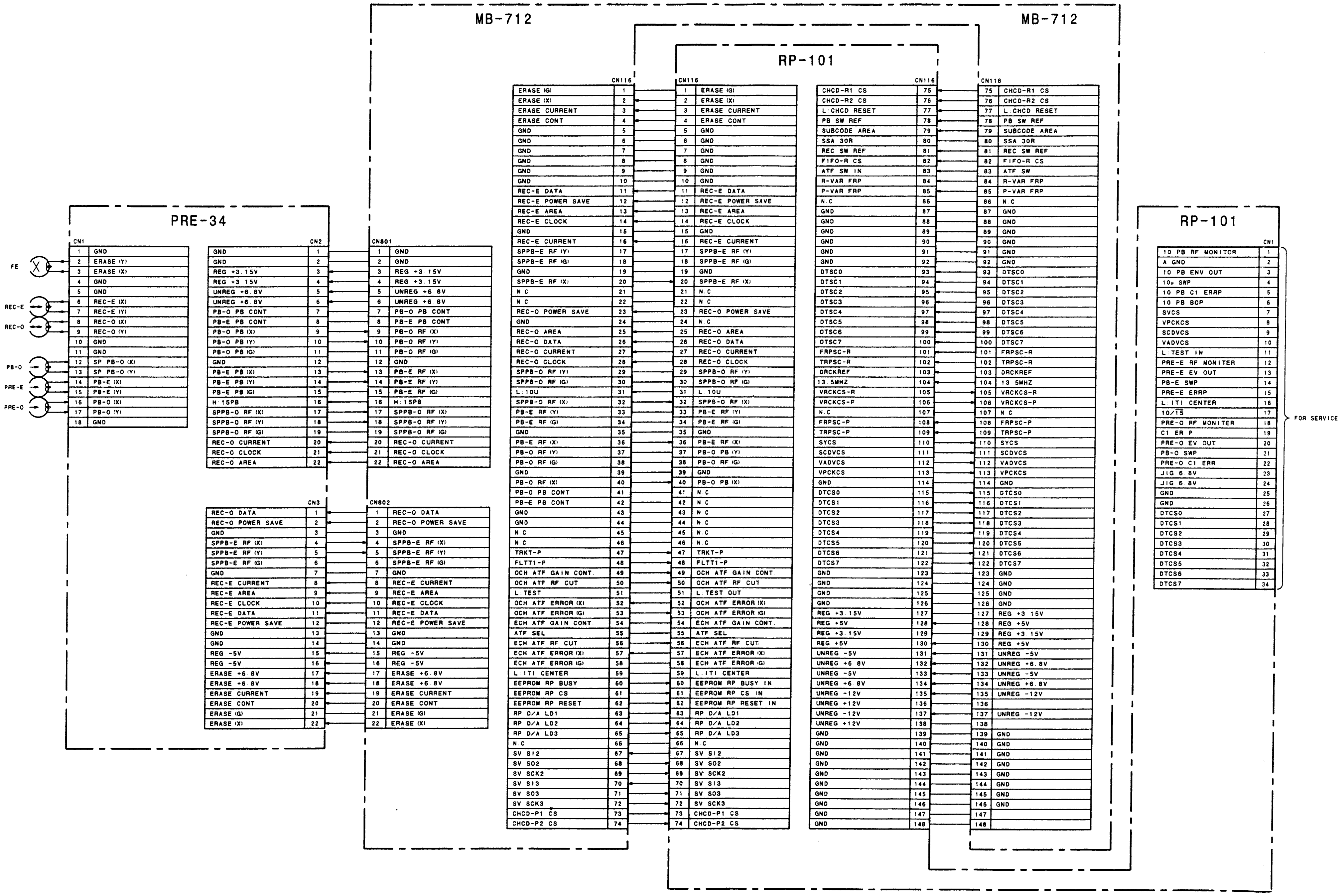

FRAME (2/4)

MODEL DSR-80/80P

DSR-80/80P

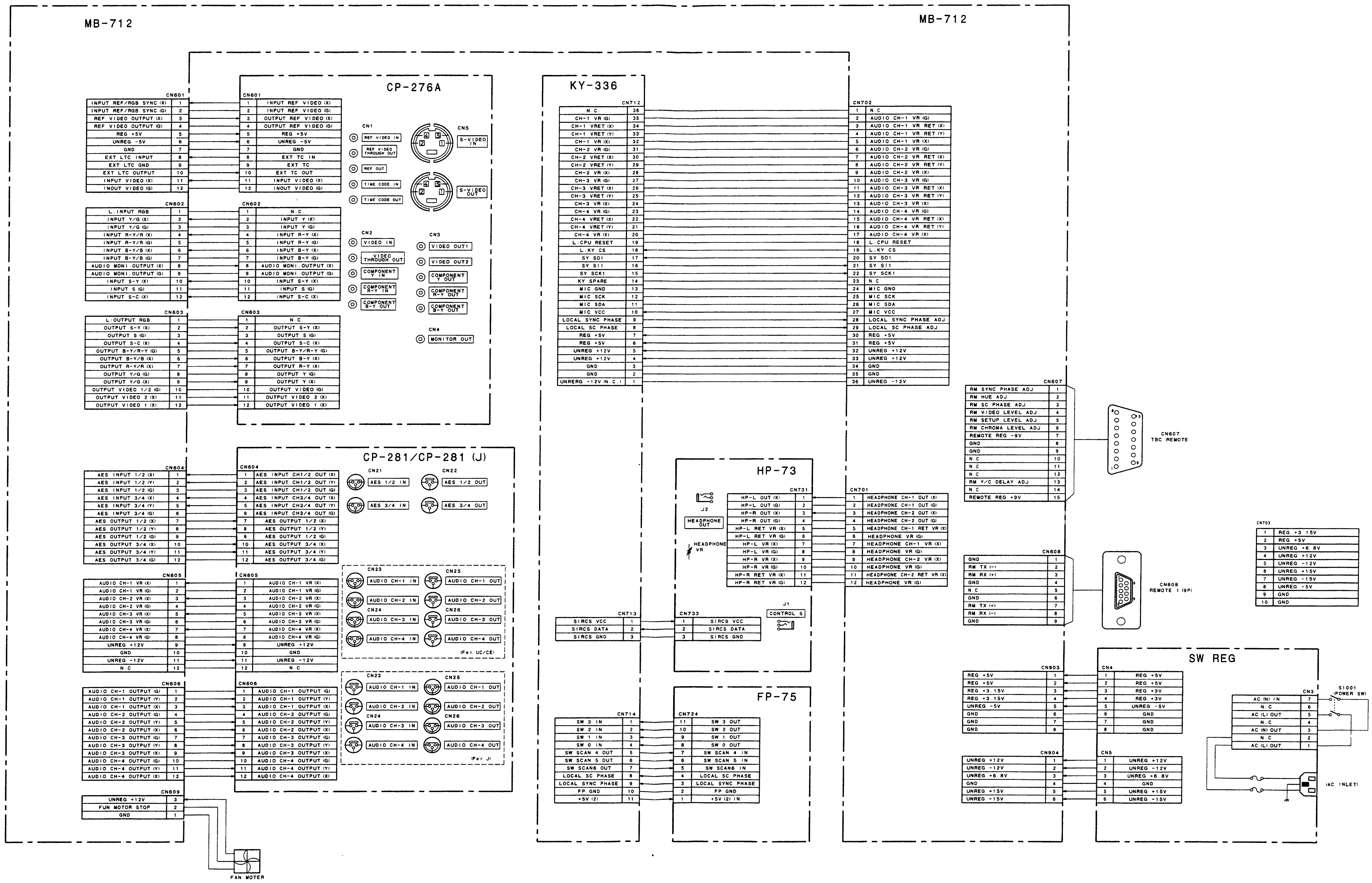
MB-712
MB-712
CP-276A
KY-336
CP-281/CP-281 (J)
HP-73
FP-75
SW REG
CN607
TBC REMOTE
CN608
REMOTE 1 (9P)
FAN MOTER

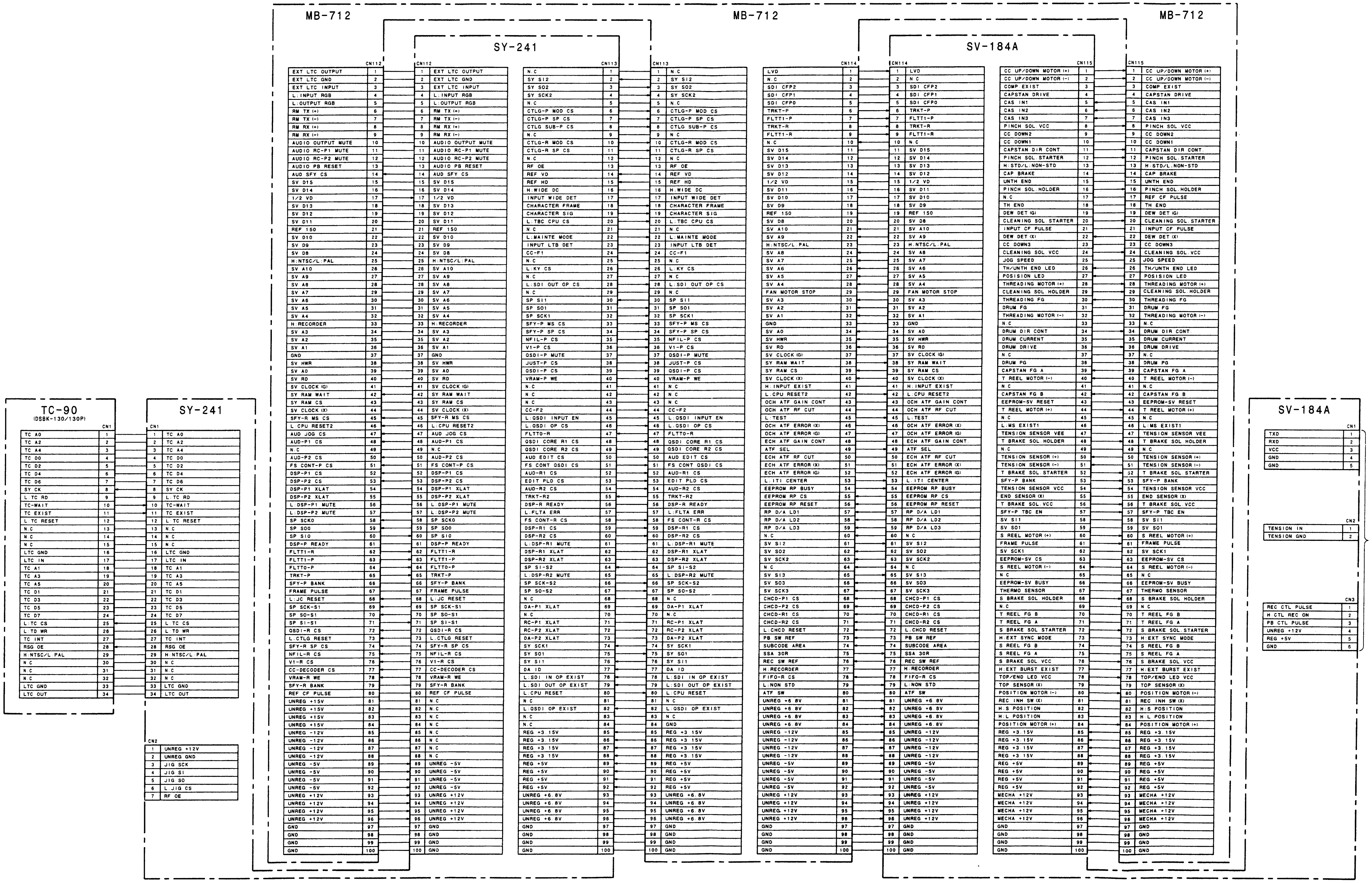

1
2
3
4
5

FRAME (3/4)
MODEL DSR-80/80P

 FRAME (4/4)

 DSR-80/80P

FRAME (4/4)

1 2 3 4 5

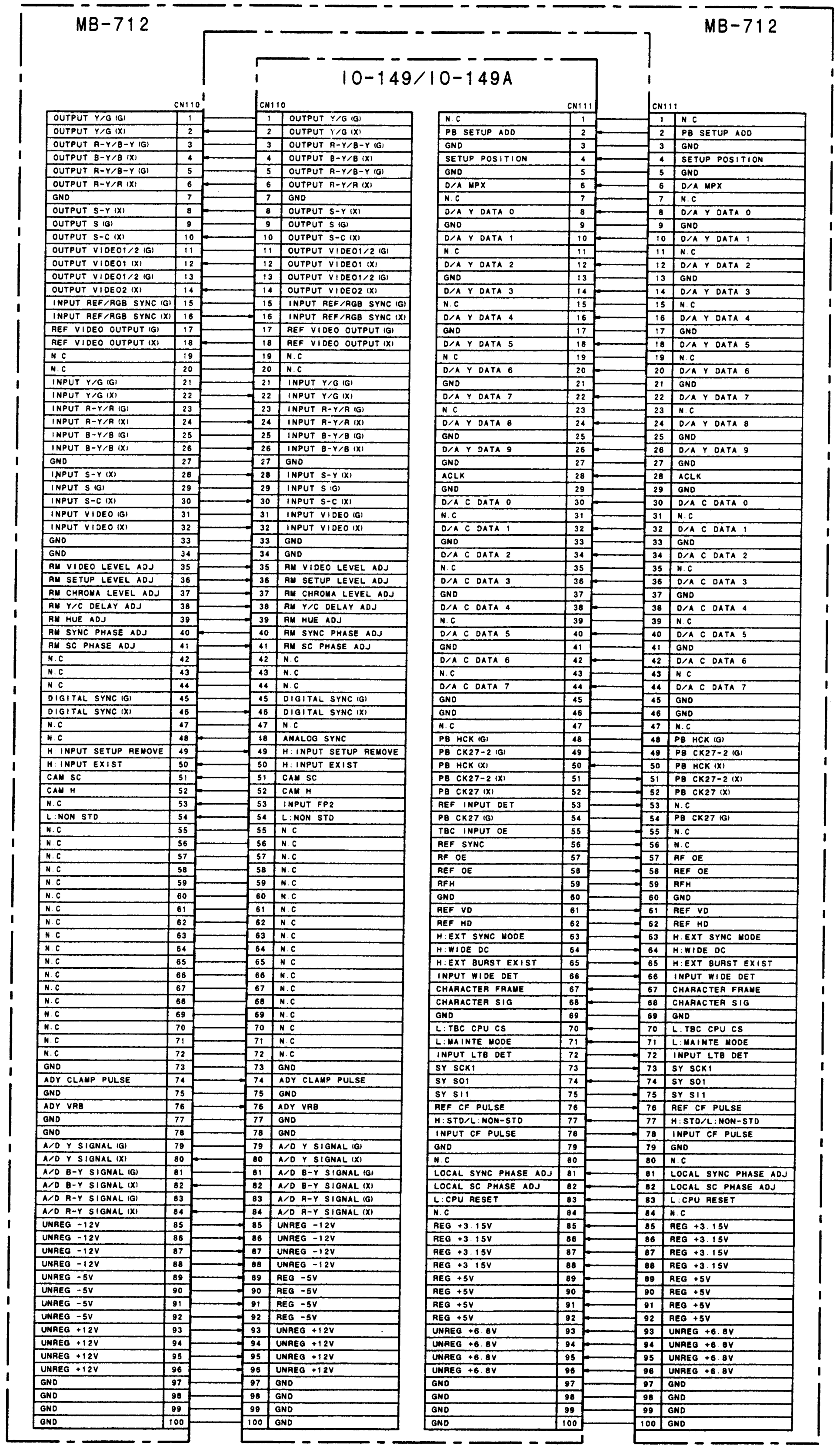

A B C D E F G H

FRAME (4/4)
MODEL DSR-80/80P

 13-184

SONY-SP0754 / DRUCK 504

SECTION 14
SEMICONDUCTOR PIN ASSIGNMENTS

ここに記載されている半導体は，それぞれの機能を等価的に表したものです。　なお，互換性のない型名を併記していることがありますので，部品を交換するときは，Spare Partsの章を参照してください。
等価回路はＩＣメーカーのデータブックに従いました。

Semiconductors of which functions are equivalent are described here. For parts replacement, refer to the section of Spare Parts in this manual. The circuit diagram of each IC is obtained from the IC data book published by the manufacturer.

DIODE Page

10E-2 14-4
11E2-TB2 14-4
1SR154-400TE-25 14-4
1SS83 14-4
1SS83TD 14-4
1SS123-T1 14-4
1SS187-TE85L 14-4
1SS193 14-4
1SS193-TE85L 14-4
1SS223 14-4
1SS226 14-4
1SS300-TE85L 14-4
1SS301-TE85L 14-4
1SS302 14-4
1SS302-TE85L 14-4
1SS351-TB 14-4
1T363 14-4
1T363A-M20-T8A 14-4

DA204U 14-4
DA204UT106 14-4
DAN202U 14-4
DAN202UT106 14-4
DAP202U 14-4
DAP202UT106 14-4
DTZ5.1B 14-4

GL480 14-4

HSM88WK-TL 14-4

KV1470 14-4
KV1470TL00 14-4
MA141WK 14-4

RB717F 14-4
RB717F-T106 14-4
RD2.0F-T7B1 14-4
RD2.0FB1 14-4
RD2.2M-B 14-4
RD6.2M-B1 14-4
RD7.5ES-B1 14-4
RD7.5ES-T1B1 14-4
RD16SB2 14-4
RD16SB2-T1 14-4

SB007-03CP 14-4
SB007-03CP-TB 14-4

TLN115A 14-4

DIODE Page

UDZ-TE-17-2.2B 14-4
UDZ-TE-17-3.0B 14-4
UDZ-TE-17-5.1B 14-4
UDZ-TE-17-6.2B 14-4

TRANSISTOR Page

2SA1020-Y 14-4
2SA1020-Y-TPE6 14-4
2SA1150 14-4
2SA1162G 14-4
2SA1162G-TE85L 14-4
2SA1226-E4 14-4
2SA1226-T1E3E4 14-4
2SA1441-L 14-4
2SA1462 14-4
2SA1462-T1Y33 14-4
2SA1576-R 14-4
2SA1576T106R 14-4
2SA1610-T1Y34 14-4
2SA1610-Y33 14-4
2SA1611-M5M6 14-4
2SA1611T1-M5M6 14-4
2SB624-BV345 14-4
2SB624-T1BV3 14-4
2SB810TP-E 14-4
2SB941-P 14-4
2SB1094 14-4
2SB1094-L 14-4
2SC1623 14-4
2SC1623-T1-L5L6 14-4
2SC2655-Y 14-4
2SC2655-Y(TPE6) 14-4
2SC2712 14-4
2SC2712-GL-TE85L 14-4
2SC2712G-TE85L 14-4
2SC3326N-A 14-4
2SC3326N-TE85L-AB 14-4
2SC3356-K 14-4
2SC3356-T1K 14-4
2SC3392-6-TB 14-4
2SC3692 14-4
2SC3735-L-B35 14-4
2SC3735-T1B-B34 14-4
2SC4081T106R 14-4
2SC4176-B35 14-4
2SC4176-T1B35 14-4
2SC4177-L6 14-4
2SC4177-T1L5L6 14-4
2SC4213A-TE85L 14-4
2SD1020TP-E 14-5
2SD1021-F 14-5
2SD1615A-T1GQGP 14-5
2SD1669R 14-5
2SK322WQTL 14-5
2SK663 14-5
2SK852-T1X3 14-5

TRANSISTOR Page

DTA144EKA-T146 14-5
DTA144EUA-T106 14-5
DTC114EKA-T146 14-5
DTC144EKA-T146 14-5
DTC144EU 14-5
DTC144EUA-T106 14-5
DTC144EUT106 14-5

FMS1 14-5
FMS1-T-148 14-5
FMS2 14-5
FMS2-T-148 14-5
FMW-8 14-5
FMW-8T148 14-5
FMW1 14-5
FMW1-T-148 14-5
FMW2 14-5
FMW2-T-148 14-5
FMW7 14-5
FMW7-T148 14-5
FMY3 14-5
FMY3-T-148 14-5
FMY4A-T148 14-5

IMX1 14-5
IMX1T110 14-5
IMZ1 14-5
IMZ1T109 14-5

PT480 14-5
PT483F1 14-5
PT483F1S 14-5

XP4401-TXE 14-5

INDEX

LED Page

CL-150PG-CD 14-6
CL-150PG-CD-T 14-6
CL-150R-CD 14-6
CL-150R-CD-T 14-6

OTHERS Page

DM-230-1 14-6

GP1S23 14-6
GP1S54 14-6
GP2S07B 14-6

IC Page

BA10358F-E2 14-6
BA7046F 14-46
BA7046F-E2 14-46

CX22017 14-7
CX22017-TH 14-7
CXA1450M-TH 14-7
CXA1451M 14-8
CXA1451M-TH 14-8
CXA1521M-TH 14-7
CXA1760Q-T6 14-7
CXA1761R-T4 14-9
CXA1762Q-T4 14-8
CXA1777N-T4 14-46
CXA8044Q-T4 14-10
CXD1177Q 14-10
CXD1177Q-T4 14-10
CXD1216M 14-11
CXD1216M-TH 14-11
CXD2131Q-T4 14-46
CXD2183R 14-11
CXD2187AR 14-12
CXD2189AR-T6 14-13
CXD2190R-T6 14-16
CXD2191R-T6 14-12
CXD2193AR-ER 14-47
CXD2202Q 14-14
CXD2208Q 14-48
CXD2302Q-T4 14-17
CXD2307R-T4 14-18
CXD2307R-T6 14-18
CXD2310AR-T4 14-49
CXD2705AQ 14-18
CXD2913AQ 14-19
CXD3101R 14-20
CXD8161AQ 14-50
CXD8165AQ 14-21
CXD8165Q 14-21
CXD8176AQ 14-19
CXD8243AM 14-49
CXD8243AM-ER 14-49
CXD8277Q 14-52
CXD8278AQ 14-54
CXD8281Q 14-55
CXD8384Q 14-56
CXD8385Q 14-58
CXD8608R 14-22
CXD8627AR 14-60
CXD8804Q 14-23
CXD8969AR 14-51
CXK1203AR 14-6
CXK1203AR-T4 14-6
CY7C185-25VC 14-22
CY7C185-25VCTEL..... 14-22
CY7C199-20VC 14-24

EPM7064LC-JOG 14-24
EPM7064LC68-10 14-24

IC Page

HA17431UA 14-20
HA17431UA-TL 14-20
HD14053BFP 14-24
HD6415108RF10 14-26
HD6437021C02X 14-25
HD6437021SC02X 14-25
HEDR-8000 14-29
HM62V256LT8Z 14-27

IDT6116SA25S0 14-28
IDT6116SA25SO 14-28
IDT6116SA25SO-T 14-28
IDT7164S20Y 14-28
IDT7164S20Y-TL 14-28

L78M09T-TL 14-29
L79M05T-FA 14-29
L79M05T-FA-TL 14-29
L79M09T-TL 14-29
LB1857M-TE-L 14-30
LH64256BK-60 14-29
LM1881M 14-29
LM1881MX 14-29
LM311PS 14-30
LM311PS-E05 14-30

M27C1001-10F1 14-30
M27C1001-10F1-(F) 14-30
M27C1001-70F1 14-30
M27C1001-70F1(F) 14-30
M27C1001-70F1-(F) 14-30
M48Z58Y-70MH1TR 14-31
M51958AFP600D 14-30
M54523FP 14-31
M54523FP-TP 14-31
M54532P 14-31
M62353GP 14-31
M62353GP-E2 14-31
M66004M6FP200D 14-32
M66256GP-E2 14-59
MB40569PFV-ER 14-61
MB88346BPFV 14-32
MB88346BPFV-EF 14-32
MC10125P 14-59
MC10H116M 14-59
MC10H116MEL 14-59
MC10H124M 14-61
MC10H124MEL 14-61
MC14051BF 14-32
MC14051BF-T2 14-32
MC14052BF 14-33
MC14052BFEL 14-33
MC14053BF 14-24
MC14053BF-T2 14-24
MC14053BFEL 14-24
MC14576CFEL 14-33
MC14577CF 14-61
MC14577CFEL 14-61
MC34051MEL 14-33

IC Page

MC68HC705C8AFU 14-34

NJM79L09UA(TE1)...... 14-35
NJM062M 14-33
NJM062M-TE2 14-33
NJM360M 14-33
NJM360M-T2 14-33
NJM2230M 14-61
NJM2230M(TE2) 14-61
NJM2903M 14-33
NJM2903M-TE2 14-33
NJM4556AM-A-TE2 14-33
NJM4558V-TE2 14-33
NJM4560M 14-33
NJM4560M-TE2 14-33
NJM5532M 14-33
NJM5532M(TE2) 14-33
NJM5532S-D 14-34
NN514256J-70-T 14-29

PQ05SZ1U 14-35
PQ05SZ5U 14-35
PQ20VZ5U 14-35

S-8054HN-CB-S 14-61
S-8054HN-CB-T1 14-61
S-8054HNM-CQ-T1 14-8
S-81230SG-QB-T1 14-35
SBX1601A 14-62
SBX1602A 14-62
SC7S02F 14-62
SC7S04F 14-41
SM5872AS-ET 14-35
SN74HC00ANS 14-39
SN74HC00ANS-E05 14-39
SN74HC08ANS 14-36
SN74HC08ANS-E05 14-36
SN74HC86ANS-E05 14-38
SN74HC139ANS 14-62
SN74HC139ANS-E05 .. 14-62
SN74HC245ANS 14-41
SN74HC245ANS-E05 .. 14-41
SN74HC377ANS 14-36
SN74HC377ANS-E05 .. 14-36
SN74HC541ANS 14-36
SN74HC541ANS-E05 .. 14-36
SN74HC573BNS-E05 .. 14-62
SN74HCT00ANS-E05 .. 14-39
SN74HCT244ANS 14-36
SN74HCT244ANS-E05 .. 14-36
SN74HCT541ANS 14-36
SN74HCT541ANS-E05 .. 14-36
SN74LS221NS-E05 14-37
SN74LVC245ANS-E20 .. 14-41
SN74LVC245ANS-E20 .. 14-41
SN74LVC245APW-E20 .. 14-41
SN75C1168NS-E05 14-9

TA7267P 14-37

IC	Page
TA8424F(TP2)	14-37
TC4053BFS	14-24
TC4053BFS-EL	14-24
TC5081AP	14-38
TC4S69F	14-41
TC4S69F(TE85R)	14-41
TC4W53FU	14-37
TC4W53FU(TE12R)	14-37
TC4W66FU(TE12R)	14-63
TC74ACT157FS(EL)	14-38
TC74ACT157FT(EL)	14-38
TC74HC86AF	14-38
TC74HC191AF	14-38
TC74HC191AF(EL)	14-38
TC74HC4051AFS(EL)	14-38
TC74HC4052AFS(EL)	14-63
TC74HC4052AFT(EL)	14-63
TC74HC4053AFS	14-39
TC74HC4053AFS-EL	14-39
TC74HCT245AF	14-41
TC74HCT245AF(EL)	14-41
TC74VHC00F	14-39
TC74VHC00F(EL)	14-39
TC74VHC00FS(EL)	14-39
TC74VHC00FT(EL)	14-39
TC74VHC02F	14-39
TC74VHC02F(EL)	14-39
TC74VHC04F	14-39
TC74VHC04F(EL)	14-39
TC74VHC04FS(EL)	14-39
TC74VHC04FT(EL)	14-39
TC74VHC08F(EL)	14-36
TC74VHC08FS(EL)	14-36
TC74VHC08FT(EL)	14-36
TC74VHC11F	14-39
TC74VHC11F(EL)	14-39
TC74VHC14F	14-63
TC74VHC14F(EL)	14-63
TC74VHC21F	14-40
TC74VHC21F(EL)	14-40
TC74VHC27F(EL)	14-40
TC74VHC32F	14-41
TC74VHC32F(EL)	14-41
TC74VHC32FS(EL)	14-41
TC74VHC32FT(EL)	14-41
TC74VHC74F	14-41
TC74VHC74F(EL)	14-41
TC74VHC74FS(EL)	14-41
TC74VHC74FT(EL)	14-41
TC74VHC86F	14-38
TC74VHC86F(EL)	14-38
TC74VHC123AFS(EL)	14-39
TC74VHC123AFT(EL)	14-39
TC74VHC125F	14-40
TC74VHC125F(EL)	14-40
TC74VHC125FS(EL)	14-40
TC74VHC125FT(EL)	14-40
TC74VHC138F(EL)	14-40
TC74VHC139F(EL)	14-62

IC	Page
TC74VHC139FS(EL)	14-62
TC74VHC139FT(EL)	14-62
TC74VHC153FS(EL)	14-63
TC74VHC153FT(EL)	14-63
TC74VHC157F	14-38
TC74VHC157F(EL)	14-38
TC74VHC157FS(EL)	14-38
TC74VHC157FT(EL)	14-38
TC74VHC163F	14-40
TC74VHC163F(EL)	14-40
TC74VHC164F	14-63
TC74VHC164FS(EL)	14-63
TC74VHC164FT(EL)	14-63
TC74VHC175F	14-40
TC74VHC175F(EL)	14-40
TC74VHC175FS(EL)	14-40
TC74VHC175FT(EL)	14-40
TC74VHC245F(EL)	14-41
TC74VHC245FS(EL)	14-41
TC74VHC245FT(EL)	14-41
TC74VHC367F	14-64
TC74VHC367F(EL)	14-64
TC74VHC374F	14-41
TC74VHC374F(EL)	14-41
TC74VHC541F	14-36
TC74VHC541F(EL)	14-36
TC74VHC541FS(EL)	14-36
TC74VHC541FT(EL)	14-36
TC74VHC574F	14-64
TC74VHC574F(EL)	14-64
TC74VHCT00AFT(EL)	14-39
TC74VHCT00FS(EL)	14-39
TC74VHCT00FT(EL)	14-39
TC74VHCT08AFT(EL)	14-36
TC74VHCT08FS(EL)	14-36
TC74VHCT08FT(EL)	14-36
TC74VHCT74AFT(EL)	14-41
TC74VHCT74FS(EL)	14-41
TC74VHCT245F(EL)	14-41
TC74VHCT541AFT(EL)	14-36
TC74VHCT541F	14-36
TC74VHCT541F(EL)	14-36
TC74VHCT541FS(EL)	14-36
TC7S02F(TE85R)	14-62
TC7S04F(TE85R)	14-41
TC7S04FU(TE85R)	14-41
TC7S04FU-TE85L	14-41
TC7S32FU(TE85R)	14-64
TC7S66F	14-41
TC7S66F(TE85R)	14-41
TC7S66FU	14-41
TC7S66FU(TE85R)	14-41
TC7SH00FU-TE85R	14-64
TC7SH04FU	14-41
TC7SH04FU-TE85R	14-41
TC7SH32FU-TE85R	14-64
TC7W00F	14-64
TC7W00F(TE12R)	14-64
TC7W04FU	14-42

IC	Page
TC7W04FU(TE12R)	14-42
TC7W04FU-TE12L	14-42
TC7W32FU-TE12L	14-42
TC7W74F	14-65
TC7W74F(TE12R)	14-65
TC7W139FU(TE12R)	14-65
TD62504F(EL)	14-42
TD62504F-TEL	14-42
TL062CPW	14-33
TL062CPW-E05	14-33
TL064CPW	14-42
TL064CPW-E05	14-42
TL084CPW-E05	14-65
TL084CPW-E20	14-65
TL431CPS	14-66
TL431CPS-E05	14-66
TL32088CNS-E20	14-66
TLC320AD58CDWR	14-66
TLC2932IPW-E20	14-65
TLC5733AIPM	14-67
TMS4C2973-26DTR	14-68
UPC324G2	14-42
UPC324G2-E2	14-42
UPC358G2-E2	14-6
UPC4558G2	14-33
UPC4570G2	14-33
UPC4570G2-E2	14-33
UPC4574G2	14-42
UPC4574G2-T2	14-42
UPD42280GU-30	14-43
UPD42280GU-30-E2	14-43
UPD482445LGW-B10-E2	14-44
UPD485505G-35	14-68
UPD485505G-35-E2	14-68
UPD6453GT-635-E2	14-45
ZA4024	14-43

DIODE, TRANSISTOR

DIODE

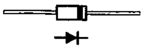

10E-2
11E2-TB2
1SS83
1SS83TD

-TOP VIEW-

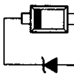

DTZ5.1B (ROHM)
RD16SB2 (NEC)
RD16SB2-T1
UDZ-TE-17-3.0B
UDZ-TE-17-5.1B

-TOP VIEW-

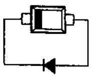

1SR154-400TE-25
1T363
1T363A-M20-T8A

GL480 ; INFRARED

-TOP VIEW-

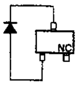

1SS193
1SS193-TE85L
SB007-03CP
SB007-03CP-TB

-TOP VIEW-

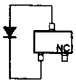

1SS187-TE85L
1SS223

-TOP VIEW-

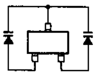

KV1470
KV1470TL00

-TOP VIEW-

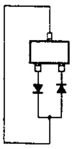

1SS123-T1
1SS226
1SS302
1SS302-TE85L
1SS351-TB
DA204U
DA204UT106

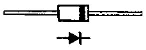

RD2.0F-T7B1
RD2.0FB1 (NEC)
RD2.2M-B
RD7.5ES-B1
RD7.5ES-T1B1
UDZ-TE-17-2.2B

-TOP VIEW-

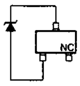

RD6.2M-B1 (ROHM)
UDZ-TE-17-6.2B

-TOP VIEW-

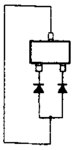

1SS300-TE85L
DAP202U
DAP202UT106
RB717F
RB717F-T106

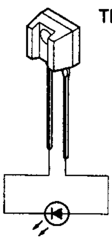

TLN115A INFRARED(TOSHIBA)

-TOP VIEW-

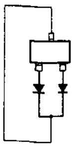

1SS301-TE85L
DAN202U
DAN202UT106
HSM88WK-TL
MA141WK

TRANSISTOR

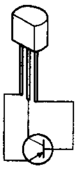

2SA1020-Y
2SA1020-Y-TPE6

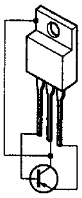

2SB941-P

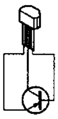

2SA1150
2SB810TP-E

-TOP VIEW-

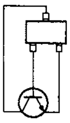

2SC1623
2SC1623-T1-L5L6
2SC2712
2SC2712-GL-TE85L
2SC2712G-TE85L (TOSHIBA)
2SC3326N-A (TOSHIBA)
2SC3326N-TE85L-AB
2SC3356-K
2SC3356-T1K
2SC3392-6-TB (SANYO)
2SC3735-L-B35
2SC3735-T1B-B34
2SC4081T106R
2SC4176-B35
2SC4176-T1B35
2SC4177-L6
2SC4177-T1L5L6

-TOP VIEW-

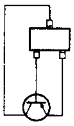

2SA1162G
2SA1162G-TE85L
2SA1226-E4
2SA1226-T1E3E4
2SA1462
2SA1462-T1Y33
2SA1576-R
2SA1576T106R
2SA1610-T1Y34
2SA1610-Y33
2SA1611-M5M6
2SA1611T1-M5M6
2SB624-BV345
2SB624-T1BV3

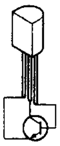

2SC2655-Y (TOSHIBA)
2SC2655-Y(TPE6)

2SA1441-L (NEC)

2SC3692 (NEC)

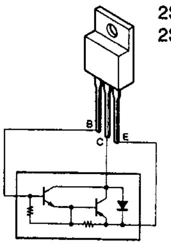

2SB1094
2SB1094-L

-TOP VIEW-

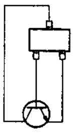

2SC4213A-TE85L
(TOSHIBA)

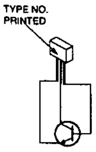

2SD1020TP-E
2SD1021-F (NEC)

-TOP VIEW-

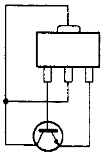

2SD1615A-T1GQGP

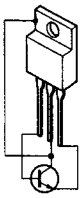

2SD1669R (SANYO)

-TOP VIEW-

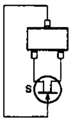

2SK322WQTL (HITACHI)
2SK663
2SK852-T1X3

-TOP VIEW-

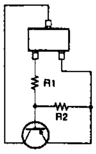

DTA144EKA-T146
(R1,R2=47 K)
DTA144EUA-T106
(R1, R2=47 K)

-TOP VIEW-

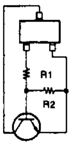

DTC114EKA-T146
(R1, R2=10 K)
DTC144EKA-T146
DTC144EU
(R1, R2=47 K)
DTC144EUA-T106
(R1, R2=47 K)
DTC144EUT106

-TOP VIEW-

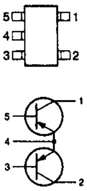

FMS1
FMS1-T-148

-TOP VIEW-

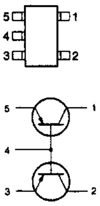

FMS2
FMS2-T-148

-TOP VIEW-

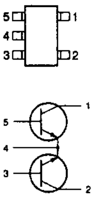

FMW-8 (ROHM)
FMW-8T148
FMW1
FMW1-T-148

-TOP VIEW-

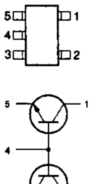

FMW2 (ROHM)
FMW2-T-148

-TOP VIEW-

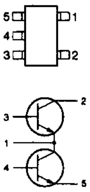

FMW7 (ROHM)
FMW7-T148

-TOP VIEW-

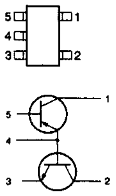

FMY3
FMY3-T-148

—TOP VIEW—

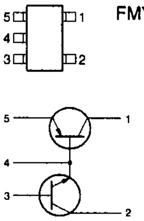

FMY4A-T148

-TOP VIEW-

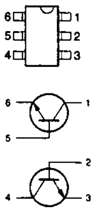

IMX1
IMX1T110

-TOP VIEW-

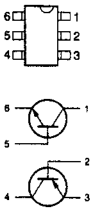

IMZ1
IMZ1T109

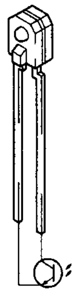

PT480

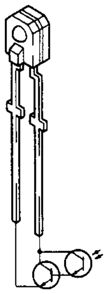

PT483F1
PT483F1S

-TOP VIEW-

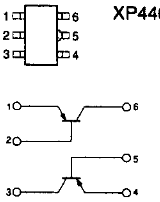

XP4401-TXE

LED, OTHERS, IC

LED

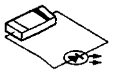

CL-150PG-CD ; GREEN
CL-150PG-CD-T
CL-150R-CD ; RED
CL-150R-CD-T

OTHERS

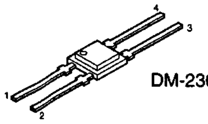

DM-230-1

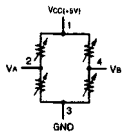

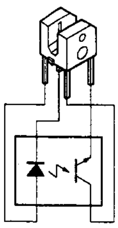

GP1S23

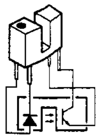

GP1S54

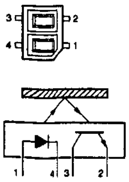

GP2S07B

IC

BA10358F-E2 (ROHM)FLAT PACKAGE
UPC358G2-E2

DUAL OPERATIONAL AMPLIFIERS
(SINGLE-SUPPLY TYPE)
-TOP VIEW-

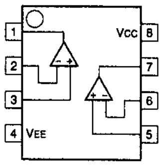

TYPE	Vcc - Vee
828 TYPE	+5 to +36V
2244 TYPE	+2.5 to +36V
2904 TYPE	+3 to +24V
3404 TYPE	+4 to +32V
3414 TYPE	+3 to +10V
4572 TYPE	+4 to +14V
5216 TYPE	+4 to +32V
7022 TYPE	+3 to +16V
75W01 TYPE	+3 to +10V
33172 TYPE	+3 to +44V
OTHERS	+3 to +36V

CXK1203AR (SONY)
CXK1203AR-T4

C-MOS DIGITAL LINE MEMORY
—TOP VIEW—

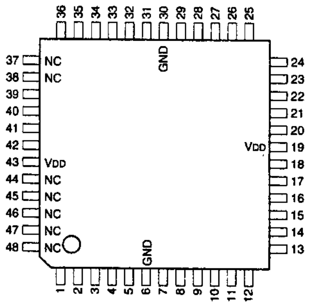

PIN NO.	I/O	SIGNAL	PIN NO.	I/O	SIGNAL	PIN NO.	I/O	SIGNAL	PIN NO.	I/O	SIGNAL
1	I	D0	13	I	PSW7	25	I	OEN	37	—	NC
2	I	D1	14	I	PSW6	26	O	DOT9	38	—	NC
3	I	D2	15	I	PSW5	27	O	DOT8	39	I	AEN
4	I	D3	16	I	PSW4	28	O	DOT7	40	I	N/P
5	I	D4	17	I	PSW3	29	O	DOT6	41	I	SCLK
6	—	GND	18	I	PSW2	30	—	GND	42	I	CLK
7	I	D5	19	—	VDD	31	O	DOT5	43	—	VDD
8	I	D6	20	I	PSW1	32	O	DOT4	44	—	NC
9	I	D7	21	I	PSW0	33	O	DOT3	45	—	NC
10	I	D8	22	I	PSB2	34	O	DOT2	46	—	NC
11	I	D9	23	I	PSB1	35	O	DOT1	47	—	NC
12	I	TINT	24	I	PSB0	36	O	DOT0	48	—	NC

AEN : LINE MEMORY SELECT
CLK : CLOCK
DIN0 - DIN9 : VIDEO DATA INPUT
DOT0 - DOT9 : VIDEO DATA OUTPUT
N/P : NTSC/PAL/SECAM SELECT
OEN : OUTPUT ENABLE
PSB0 - PSB2 : DELAY STEP SELECT (1-BITxN)
PSW0 - PSW7 : DELAY STEP SELECT (8-BITxN)
SCLK : CLOCK EDGE SELECT
TINT : TEST

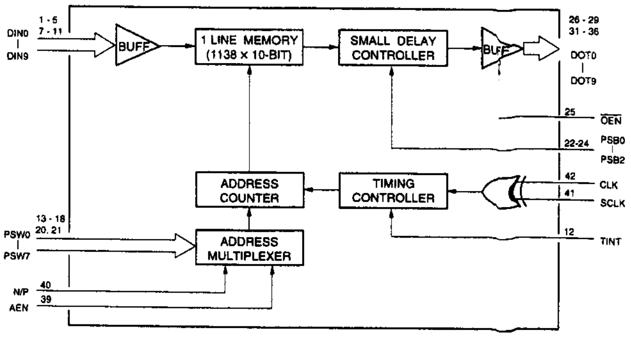

CX22017 (SONY)
CX22017-TH

VIDEO SIGNAL PROCESSOR
-TOP VIEW-

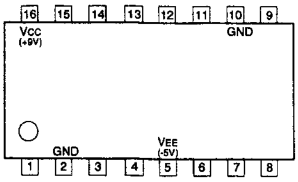

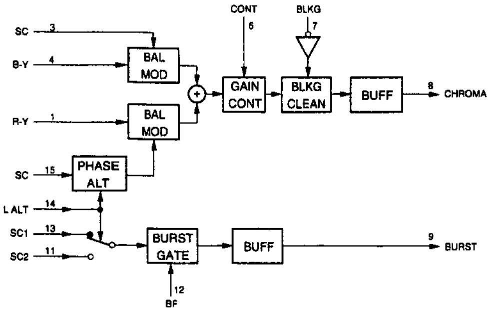

CXA1760Q-T6 (SONY)

RECORD/PLAYBACK AMPLIFIER
–TOP VIEW–

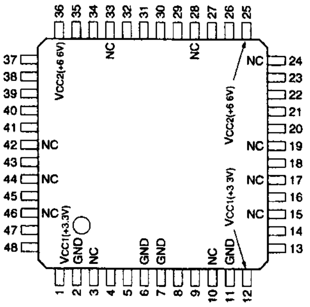

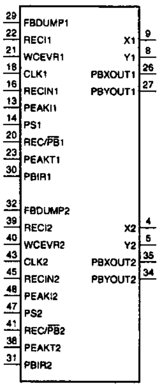

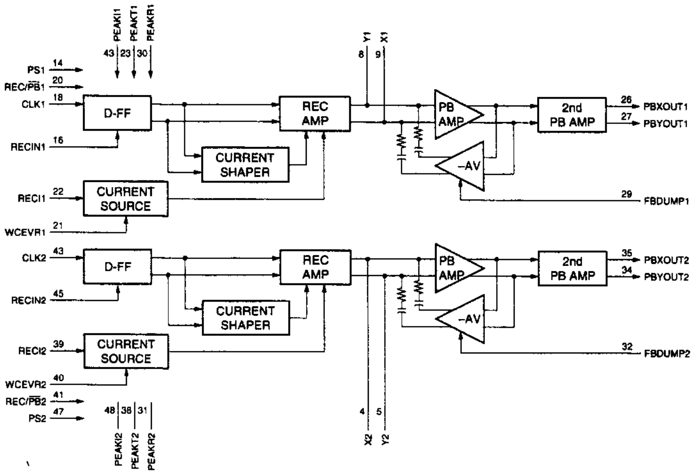

PIN NO.	I/O	SIGNAL	PIN NO.	I/O	SIGNAL	PIN NO.	I/O	SIGNAL	PIN NO.	I/O	SIGNAL
1	I	VCC1(+3.3V)	13	I	PEAKI1	25	I	VCC2(+6.6V)	37	–	NC
2	–	GND	14	I	PS1	26	O	PBXOUT1	38	I	PEAKT2
3	–	NC	15	–	NC	27	O	PBYOUT1	39	I	RECI2
4	I/O	X2	16	I	RECIN1	28	–	NC	40	I	WCEVR2
5	I/O	Y2	17	–	NC	29	I	FBDUMP1	41	I	REC/$\overline{PB2}$
6	–	GND	18	I	CLK1	30	I	PBIR1	42	–	NC
7	–	GND	19	–	NC	31	I	PBIR2	43	I	CLK2
8	I/O	Y1	20	I	REC/$\overline{PB1}$	32	I	FBDUMP2	44	–	NC
9	I/O	X1	21	I	WCEVR1	33	–	NC	45	I	RECIN2
10	–	NC	22	I	RECI1	34	O	PBYOUT2	46		NC
11	–	GND	23	I	PEAKT1	35	O	PBXOUT2	47	I	PS2
12	I	VCC1(+3.3V)	24	–	NC	36	I	VCC2(+6.6V)	48	I	PEAKI2

CXA1450M-TH (SONY)FLAT PACKAGE

VIDEO SIGNAL SWITCH
-TOP VIEW-

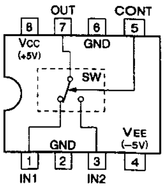

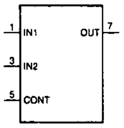

CXA1521M-TH (SONY)

GAIN CONTROL AMP
—TOP VIEW—

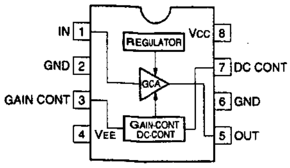

CXA1451M (SONY)FLAT PACKAGE
CXA1451M-TH

WIDEBAND VIDEO SWITCH
-TOP VIEW-

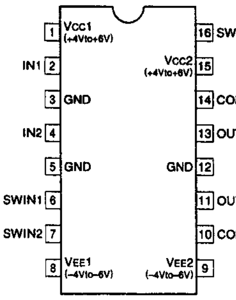

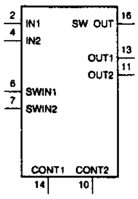

INPUT
CONT1, 2 ; POWER SAVE CONTROL PIN OF DRV. 1 AND DRV. 2
INT1, 2 ; 1/2-CHANNEL INPUT PIN
SWIN1, 2 ; IN1/IN2 PINS SWITCH CONTROL PIN

OUTPUT
OUT1, 2 ; OUTPUT PIN OF DRV. 1/2
SWOUT ; OUTPUTS IN1 PIN OR IN2 PIN WHICH HAS BEEN SELECTED BY SWITCH

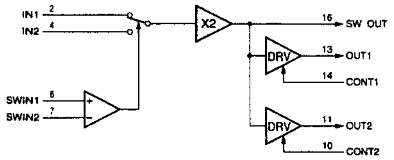

S-8054HNM-CQ-T1 (SEIKO I&E)

C-MOS VOLTAGE DETECTOR
—TOP VIEW—

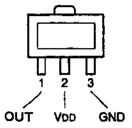

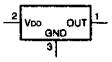

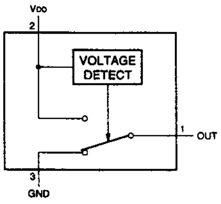

ITEM	VOLTAGE DETECT (V)	OUTPUT TYPE
S-8051ANB	1.00 - 1.10	Nch
S-8051ANR	1.10 - 1.20	OPEN DRAIN
S-8052ALQ	2.40 - 2.60	C-MOS
S-8052ALY	2.60 - 2.80	
S-8053ALB	2.80 - 3.10	
S-8053ALR	3.10 - 3.40	
S-8054ALB	4.00 - 4.30	
S-8054ALR	4.30 - 4.60	
S-8054HN	3.80 - 4.20	Nch
S-8054HNM	4.50 - 4.70	OPEN DRAIN

CXA1762Q-T4 (SONY)

CLOCK DETECT PLL
-TOP VIEW-

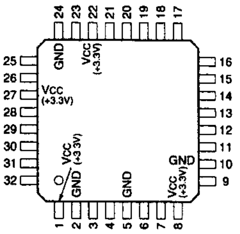

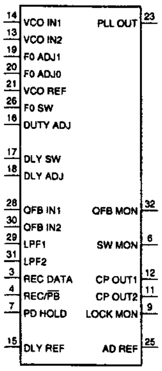

PIN NO.	I/O	SIGNAL	PIN NO.	I/O	SIGNAL
1	–	VCC(+3.3V)	17	I	DLY SW
2	–	GND	18	I	DLY ADJ
3	I	REC DATA	19	I	F0 ADJ1
4	I	REC/PB	20	I	F0 ADJ0
5	–	GND	21	–	VCO REF
6	O	SW MON	22	–	VCC(+3.3V)
7	I	PD HOLD	23	O	PLL OUT
8	–	VCC(+3.3V)	24	–	GND
9	O	LOCK MON	25	O	AD REF
10	–	GND	26	I	F0 SW
11	O	CP OUT2	27	–	VCC(+3.3V)
12	O	CP OUT1	28	I	QFB IN1
13	I	VCO IN2	29	–	LPF1
14	I	VCO IN1	30	I	QFB IN2
15	–	DLY REF	31	–	LPF2
16	I	DUTY ADJ	32	O	QFB MON

AD REF ; A/D REFERENCE VOLTAGE TERMINAL
CP OUT1, 2 ; DIFFERENTIAL ERROR VOLTAGE OUTPUT
DLY ADJ ; PLL OUTPUT DELAY ADJUSTMENT INPUT
DLY REF ; EXTERNAL REFERENCE CURRENT SOURCE TERMINAL
DLY SW ; PLL OUTPUT INVERT/NON-INVERT CONTROL INPUT
DUTY ADJ ; VCO DUTY ADJUSTMENT INPUT
F0 ADJ0, 1 ; VCO FREE-RUN (F0) FREQUENCY ADJUSTMENT INPUT
F0 SW ; VCO FREE-RUN FREQUENCY SELECT INPUT
LOCK MON ; PLL LOCK MONITOR OUTPUT
PD HOLD ; PHASE DETECTOR HOLD/NORMAL SELECT INPUT
QFB IN1, 2 ; PLAYBACK DATA INPUT
QFB MON ; QUANTIZED FEED-BACK EQUALIZER MONITOR OUTPUT
REC DATA ; RECORDING DATA INPUT
REC/PB ; REC/PB SELECT INPUT (H : REC, L : PB)
SW MON ; SW MONITOR OUTPUT
VCO IN1, 2 ; DIFFERENTIAL ERROR VOLTAGE INPUT
VCO REF ; EXTERNAL REFERENCE CURRENT SOURCE TERMINAL

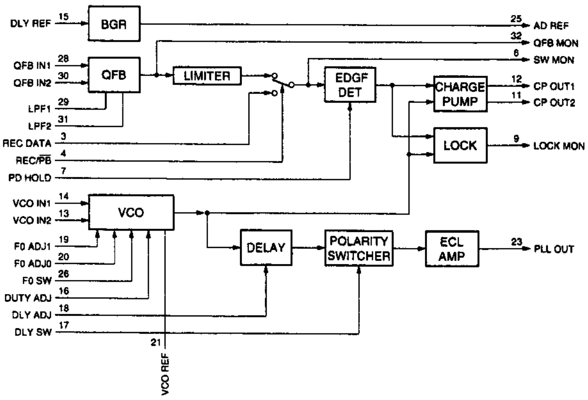

CXA1761R-T4 (SONY)

EQUALIZER FOR DIGITAL VCR

—TOP VIEW—

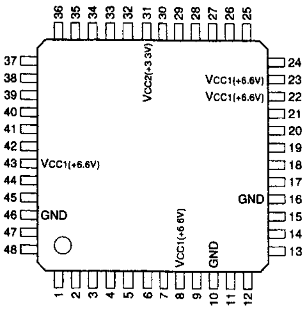

PIN NO.	I/O	SIGNAL	PIN NO.	I/O	SIGNAL
1	I	JSWP	25	I	EVR4
2	O	DCS OUT	26	I	REF1
3	I	EQ IN	27	I	REF2
4	I	EQ CONT1	28	I	EVR1B
5	I	EQ CONT2	29	I	EVR1A
6	I	DECUP1	30	I	DECUP2
7	I	EQ SEL	31	I	VCC2(+3.3V)
8	I	VCC1(+6.6V)	32	I	EQ CONT4
9	O	SW OUT	33	I	EQ CONT3
10	–	GND	34	I	PS REF1
11	I	VCA IN1	35	I	PS REF2
12	I	VCA IN2	36	I	DO LEVEL
13	I	EVR2B	37	I	ENV CONST
14	I	EVR2A	38	I	REF CONST
15	O	VCA OUT	39	O	DO OUT
16	–	GND	40	O	REF OUT
17	I	AGC IN1	41	O	ENV OUT
18	I	AGC IN2	42	I	IN1
19	I	AGC REF	43	I	VCC1(+6.6V)
20	O	AGC OUT	44	I	DC1
21	I	BUFF COUT	45	I	DC2
22	I	VCC1(+6.6V)	46	–	GND
23	I	VCC1(+6.6V)	47	I	IN2
24	I	AGC CONT	48	I	REC/PB

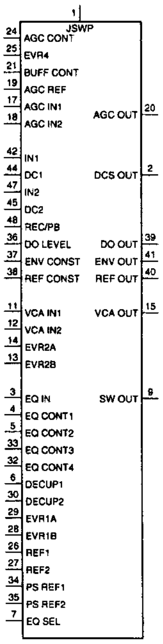

SN75C1168NS-E05 (TI)

BI-CMOS DUAL DIFFERENTIAL LINE DRIVER/RECEIVER

—TOP VIEW—

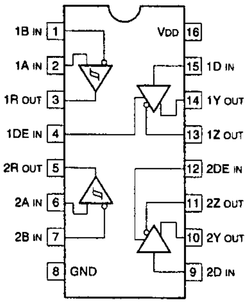

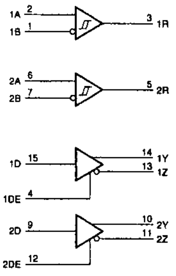

DRIVER BLOCK

INPUT	ENABLE	OUTPUTS	
D	DE	Y	Z
1	1	1	0
0	1	0	1
x	0	HI-Z	HI-Z

0 : LOW LEVEL
1 : HIGH LEVEL
? : INDETERMINATE
x : DON'T CARE
HI-Z : HIGH IMPEDANCE

RECEIVER BLOCK

DIFFERENTIAL INPUT	OUTPUT
A - B	R
VID ≥ 0.2 V	1
−0.2 V < VID < 0.2 V	?
VID ≤ 0.2 V	0
OPEN	1

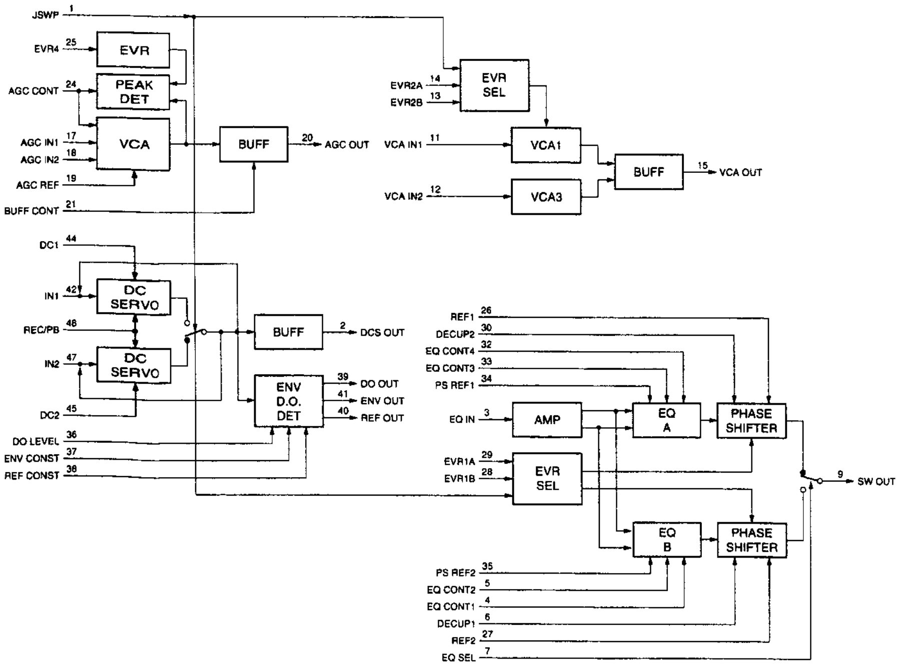

CXA8044Q-T4 (SONY)

BALANCED MODULATOR AND RF ENVELOPE DETECTOR

-TOP VIEW-

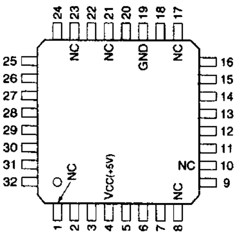

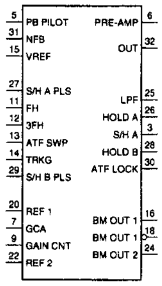

PIN NO.	I/O	SIGNAL	PIN NO.	I/O	SIGNAL
1	–	NC	17	–	NC
2	–	PB 5V	18	O	BM OUT 1
3	O	S/H A	19	–	GND
4	–	VCC(+5V)	20	I	REF1
5	I	PB PILOT	21	–	NC
6	O	PRE-AMP	22	I	REF2
7	I	GCA	23	–	NC
8	–	NC	24	O	BM OUT 2
9	I	GAIN CNT	25	–	LPF
10	–	NC	26	O	HOLD A
11	I	FH	27	I	S/H A PLS
12	I	3FH	28	O	HOLD B
13	I	ATF SWP	29	I	S/H B PLS
14	I	TRKG	30	O	AYF LOCK
15	–	VREF	31	I	NFB
16	O	BM OUT 1	32	O	OUT

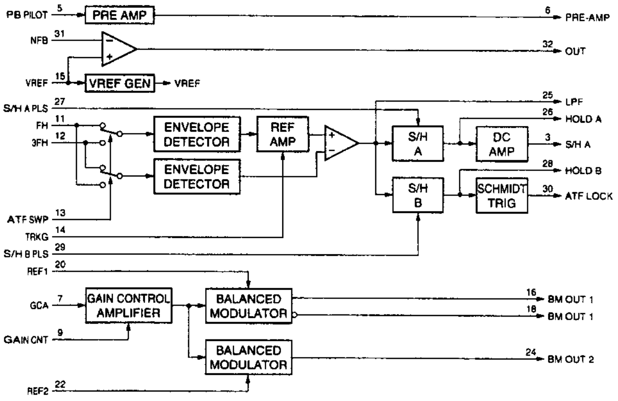

CXD1177Q (SONY)
CXD1177Q-T4

C-MOS Y/C 2 CHANNEL D/A CONVERTER

-TOP VIEW-

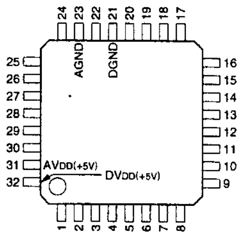

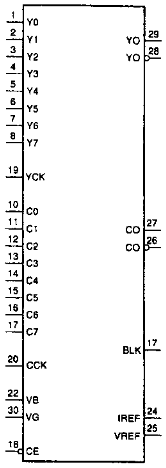

(AVDD, DVDD=5V)

PIN No.	I/O	SIGNAL	PIN No.	I/O	SIGNAL
1	I	Y0	17	O	BLK
2	I	Y1	18	I	CE
3	I	Y2	19	I	YCK
4	I	Y3	20	I	CCK
5	I	Y4	21	—	DGND
6	I	Y5	22	I	VB
7	I	Y6	23	—	AGND
8	I	Y7	24	O	IREF
9	I	C0	25	O	VREF
10	I	C1	26	O	CO
11	I	C2	27	O	CO
12	I	C3	28	O	YO
13	I	C4	29	O	YO
14	I	C5	30	I	VG
15	I	C6	31	—	AVDD
16	I	C7	32	—	DVDD

INPUT

C0-C7 ; C DATA
CCK ; CHROMA CLOCK
CE ; CHIP ENABLE
VB ; BIAS VOLTAGE
VG ; GND VOLTAGE
Y0-Y7 ; Y DATA
YCK ; LUMINANCE CLOCK

OUTPUT

BLK ; BLANKING PULSE
CO, CO ; C DATA
IREF ; CURRENT REFERENCE
VREF ; VOLTAGE REFERENCE
YO, YO ; Y DATA

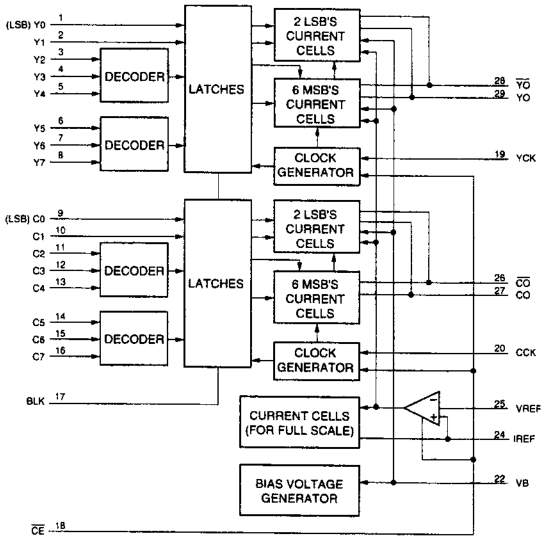

CXD2183R (SONY)

C-MOS SIGNAL PROCESSOR (DIGITAL VTR)

-TOP VIEW-

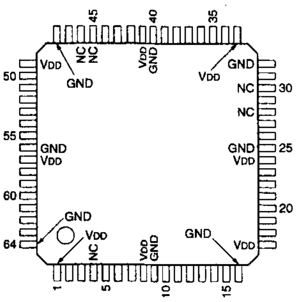

(VDD = +2.7 to 3.3V)

PIN No.	I/O	SIGNAL	PIN No.	I/O	SIGNAL	PIN No.	I/O	SIGNAL	PIN No.	I/O	SIGNAL
1	—	VDD	17	—	VDD	33	—	VDD	49	—	VDD
2	I	VFON	18	I/O	PB0	34	I/O	C7	50	I	XRST
3	I	HFON	19	I/O	PB1	35	I/O	C6	51	O	CEN
4	—	NC	20	I/O	PB2	36	I/O	C5	52	I	T2
5	I/O	SYNR	21	I/O	PB3	37	I/O	C4	53	I	T1
6	I/O	PRPB0	22	I/O	PB4	38	I/O	C3	54	O	T0
7	I/O	PRPB1	23	I/O	PB5	39	I/O	C2	55	I	CLK
8	—	VDD	24	—	VDD	40	—	GND	56	—	GND
9	—	GND	25	—	GND	41	—	VDD	57	—	VDD
10	I/O	PRPB2	26	I/O	PB6	42	I/O	C1	58	O	QEN
11	I/O	PRPB3	27	I/O	PB7	43	I/O	C0	59	O	PRB
12	I/O	PRPB4	28	—	NC	44	I/O	SYNP	60	O	PRB
13	I/O	PRPB5	29	I	XPAS	45	—	NC	61	O	NVP
14	I/O	PRPB6	30	—	NC	46	—	NC	62	O	NHP
15	I/O	PRPB7	31	I	MODE	47	I	CINV	63	I	REC
16	—	GND	32	—	GND	48	—	GND	64	—	GND

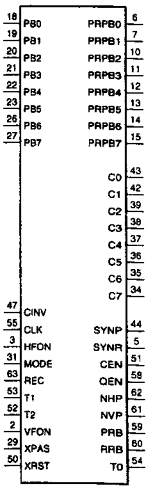

INPUT

CINV	;	PR/PB LINE SEQUENTIAL INVERT SIGNAL
CLK	;	CLOCK
HFON	;	HORIZONTAL FILTER ON/OFF (H : ON,L : OFF)
MODE	;	OPERATION MODE SW
REC	;	REC/PB SELECT (H : REC, L : PB)
T1	;	TEST SIGNAL
T2	;	TEST SIGNAL
VFON	;	VERTICAL FILTER ON/OFF (H : ON,L : OFF)
XPAS	;	THROUGH OUT PRPB↔C, SYNR↔SYNP
XRST	;	RESET

OUTPUT

CEN	;	EXTERNAL SYNC TEST MONITOR
QEN	;	TIMING GENERATOR TEST MONITOR
NHP	;	TIMING GENERATOR TEST MONITOR
NVP	;	TIMING GENERATOR TEST MONITOR
PRB	;	TIMING GENERATOR TEST MONITOR
PRB	;	TIMING GENERATOR TEST MONITOR
T0	;	TEST SIGNAL

INPUT/OUTPUT

C0 - C7	;	PB DATA
PB0 - PB7	;	LINE SEQUENTIALIZE PR, PB DATA
PRPB0 - PRPB7	;	PR, PB DATA
SYNP	;	CHROMA REFERENCE SYNC
SYNR	;	PR/PB REFERENCE SYNC

MODE	PRPB0 – PRPB7
L	PR DATA
H	13.5 MHz RATE TIME MULTIPLEXED PR, PB DATA

CXD1216M (SONY)FLAT PACKAGE
CXD1216M-TH

C-MOS GENLOCK DRIVER

-TOP VIEW-

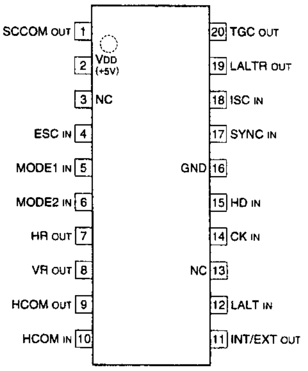

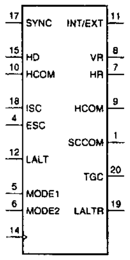

INPUT		MODE	SYSTEM
MODE1	MODE2		
0	0	M1	PAL-VBS
1	0	M2	PALM-VBS
0	1	M3	PAL,SECAM-VS/SC/LALT
1	1	M4	NTSC-VBS,NTSC-VS/SC PALM-VS/SC/LALT

0 ; LOW LEVEL
1 ; HIGH LEVEL

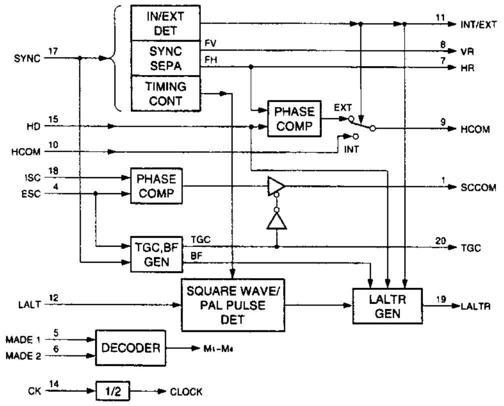

INPUT

CK	;	4fsc CLOCK INPUT
ESC	;	SC/COLOR BURST
HCOM	;	PHASE COMPARATE FROM CXD1217
HD	;	H DRIVE FROM CXD1217
ISC	;	SUBCARRIER FROM CXD1217
LALT	;	LALT FROM REFERENCE SIGNAL GENERATOR
MODE1,2	;	SYSTEM SELECT
SYNC	;	SYNC FROM REFERENCE SIGNAL GENERATOR

OUTPUT

HCOM	;	PHASE COMPARATOR HR WITH HD
HR	;	fH OF SYNC SEPARATE
INT/EXT	;	INTERNAL/EXTERNAL SPECIFIED
LALTR	;	LINE CHANGE RESET
SCCOM	;	PHASE COMPARATOR ESC WITH ISC
TGC	;	TRISTATE CONTROL
VR	;	fV OF SYNC SEPARATE

CXD2191R-T6 (SONY)

C-MOS CLOCK/TIMING GENERATOR
-TOP VIEW-

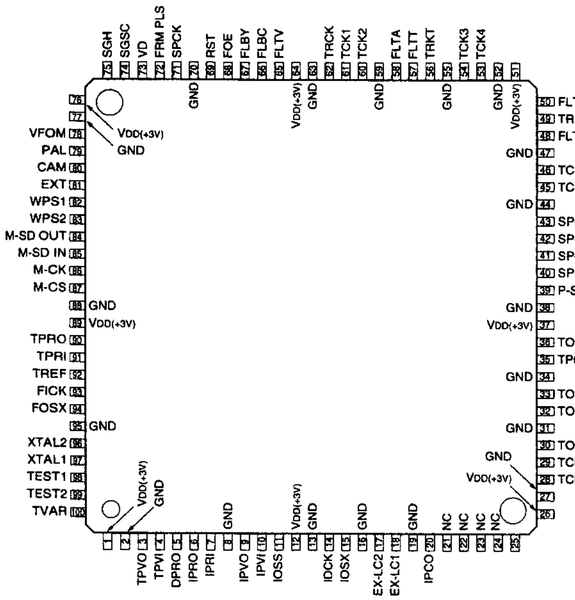

CXD2187AR (SONY)

SIGNAL PROCESSOR FOR THE DIGITAL VCR
-TOP VIEW-

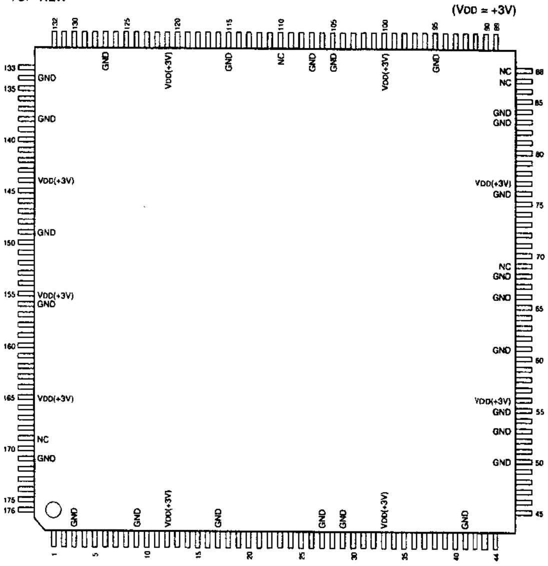

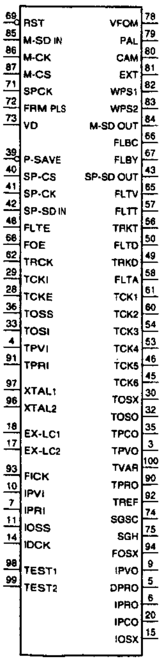

INPUT

EX-LC1 ; EXTERNAL LC RESONATOR
FICK ; 13.5MHz OSCILLATOR
FLTE ; REFERENCE FRAME PULSE FOR THE INDI MODE
FOE ; REFERENCE FRAME PULSE FOR THE LINE & CAMERA MODE
FRM PLS ; FRAME PULSE FOR THE AFC
IDCK ; FRAME LOCKED 13.5MHz CLOCK
IOSS ; FRAME LOCKED 13.5MHz DIRECT OR 1/2 SELECT
IPRI ; PILOT REFERENCE
IPVI ; PILOT REFERENCE FEEDBACK
M-CK ; DATA TRANSFER CLOCK
M-CS ; CHIP SELECT
M-SD IN ; SERIAL DATA
P-SAVE ; POWER SAVE
RST ; RESET
SPCK ; HORIZONTAL LOCKED CLOCK (13.5kHz)
SP-CK ; DATA TRANSFER CLOCK
SP-CS ; CHIP SELECT
SP-SD IN ; SERIAL DATA
TCKE ; TRCK BUFFER FOR THE TCK5 & 6
TCKI ; TRCK BUFFER FOR THE TCK1 - 4
TOSI ; EXTERNAL LC RESONATOR
TOSS ; EXTARNAL LC RESONATOR DIRECT OR 1/2 SELECT
TPRI ; EXTERNAL PLL REFERENCE FOR THE TRCK PLL
TPVI ; TRCK PILOT FEEDBACK
TRCK ; TR CLOCK
VD ; VERTICAL PULSE FOR THE AFC
XTAL1 ; 13.5MHz EXTERNAL CRYSTAL OSCILLATOR

OUTPUT

CAM ; STATUS (L = LINE, H = CAM)
DPRO ; DRUM REFERENCE PROTECTION
EX-LC2 ; EXTERNAL LC RESONATOR
EXT ; STATUS (L = INT, H = EXT)
FLBC ; FRAME PULSE FOR THE BLK-C DATA IN PB MODE
FLBY ; FRAME PULSE FOR THE BLK-Y DATA IN PB MODE
FLTA ; FRAME PULSE FOR THE RECORDING AUDIO
FLTD ; FRAME PULSE FOR THE MECHANICAL & SPEED CONTROLLERS
FLTT ; FRAME PULSE FOR THE DESHUFFLE MEMORY
FLTV ; FRAME PULSE FOR THE BLK-MEMORY
FOSX ; EXTERNAL CRYSTAL OSCILLTOR BUFFERED OUTPUT
IPCO ; CHARGE PUMP OUTPUT FOR THE IDCK PLL
IOSX ; IDCK PLL OSCILLATOR
IPRO ; PILOT REFERENCE SIGNAL FOR THE IDCK PLL
IPVO ; PILOT FEEDBACK SIGNAL
M-SD OUT ; SERIAL DATA FOR THE MODE CONTROLLER
PAL ; STATUS (L = NTSC, H = PAL)
SGH ; JSG HORIZONTAL PULSE IN PLAYBACK MODE
SGSC ; JSG ODD/EVEN IN PLAYBACK MODE
SP-SD OUT ; SERIAL DATA FOR THE SPEED CONTROLLER
TCK1 - TCK6 ; TRCK CLOCK BUFFERS
TOSO ; EXTERNAL LC RESONATOR FOR THE TRCK PLL
TOSX ; TRCK PLL OSCILLATOR
TPCO ; CHARGE PUMP FOR THE TRCK PLL
TPVO ; PILOT FEEDBACK SIGNAL FOR THE TRCK PLL
TPRO ; EXTERNAL PLL REFERENCE SIGNAL FOR THE TRCK PLL
TREF ; REFERENCE PULSE FOR THE FRAME PLL
TRKD ; TRACK PULSE FOR THE MECHANICAL & SPEED CONTROLLERS
TRKT ; TRACK PULSE FOR THE DESHUFFLE MEMORY
TVAR ; FRAME PLL FEEDBACK PULSE (FOR OPERATION CHECK)
VFOM ; STATUS
WPS1 ; STATUS
WPS2 ; STATUS
XTAL2 ; 13.5MHz EXTERNAL CRYSTAL OSCILLATOR

PIN No.	I/O	SIGNAL	PIN No.	I/O	SIGNAL	PIN No.	I/O	SIGNAL	PIN No.	I/O	SIGNAL
1	I	SMODE	45	I	SDI1	89	I/O	IDT15	133	I/O	IDT0
2	I	TMODE	46	O	SDO1	90	I/O	IDT14	134	–	GND
3	–	GND	47	I/O	SIO0	91	I	JSWP	135	I/O	FIDT2
4	O	ADRS4	48	O	DTOE	92	I/O	IDT13	136	I/O	FIDT1
5	O	ADRS5	49	I	RAMTEST	93	I/O	IDT12	137	I/O	FIDT0
6	O	ADRS6	50	–	GND	94	I/O	IDT11	138	–	GND
7	O	ADRS7	51	O	TRP	95	–	GND	139	I	BUPFS
8	O	ADRS8	52	O	FRP	96	I/O	IDT10	140	I	AENA
9	–	GND	53	–	GND	97	I/O	IDT9	141	O	ASTART
10	O	RAS	54	I	VRCK	98	I/O	IDT8	142	O	ADTOT
11	O	UWE	55	–	GND	99	I/O	IDT7	143	I	ADTIN
12	–	VDD	56	–	VDD	100	–	VDD	144	–	VDD
13	O	LWE	57	O	DTSC0	101	I/O	IDT6	145	O	SPSI
14	I/O	W7	58	O	DTSC1	102	I/O	IDT5	146	I	SPSO
15	I/O	SIO7	59	O	DTSC2	103	I/O	IDT4	147	I	SPSCK
16	I/O	W6	60	O	DTSC3	104	I/O	IDT3	148	I	XRST
17	–	GND	61	–	GND	105	–	GND	149	–	GND
18	I/O	SIO6	62	O	DTSC4	106	I	TRCK	150	I	SPCS
19	I/O	SIO12	63	O	DTSC5	107	–	GND	151	I	MCCS
20	I/O	W13	64	O	DTSC6	108	I	FLTT	152	I	MCSCK
21	I/O	SIO13	65	O	DTSC7	109	I	TRKT	153	I	MCSO
22	I/O	W14	66	–	GND	110	–	NC	154	O	MCSI
23	I/O	SIO14	67	I	VPCK	111	O	IENPA	155	–	VDD
24	I/O	W15	68	–	GND	112	O	IENPV	156	–	GND
25	I/O	SIO15	69	–	NC	113	O	IOEC	157	I/O	W12
26	O	SE	70	I	SYCS	114	O	BUPSF	158	I/O	SIO11
27	–	GND	71	I	SCDVCS	115	–	GND	159	I/O	W11
28	O	SC	72	I	VADVCS	116	I/O	FIDT15	160	I/O	SIO10
29	–	GND	73	I	DTCS0	117	I/O	FIDT14	161	I/O	W10
30	I/O	W5	74	I	DTCS1	118	I/O	FIDT13	162	I/O	SIO9
31	I/O	SIO5	75	I	DTCS2	119	I/O	FIDT12	163	I/O	W9
32	I/O	W4	76	–	GND	120	I/O	FIDT11	164	I/O	SIO8
33	–	VDD	77	–	VDD	121	–	VDD	165	–	VDD
34	I/O	SIO4	78	I	DTCS3	122	I/O	FIDT10	166	I/O	W8
35	I/O	W3	79	I	DTCS4	123	I/O	FIDT9	167	O	DSF
36	I/O	SIO3	80	I	DTCS5	124	I/O	FIDT8	168	O	CAS
37	I/O	W2	81	I	DTCS6	125	I/O	FIDT7	169	–	NC
38	I/O	SIO2	82	I	DTCS7	126	I/O	FIDT6	170	O	ADRS0
39	–	GND	83	–	GND	127	–	GND	171	–	GND
40	I/O	W1	84	–	GND	128	I/O	FIDT5	172	O	ADRS1
41	I/O	SIO1	85	I	TBCRE	129	I/O	FIDT4	173	O	ADRS2
42	I/O	W0	86	I	BANK	130	I/O	FIDT3	174	O	ADRS3
43	I	ACLK1	87	–	NC	131	I/O	IDT2	175	I	IDSL1
44	I	BCLK1	88	–	NC	132	I/O	IDT1	176	I	IDSL0

CXD2189AR-T6 (SONY)

C-MOS CHANNEL ENCODER/DECODER(FOR DIGITAL VCR)
-TOP VIEW-

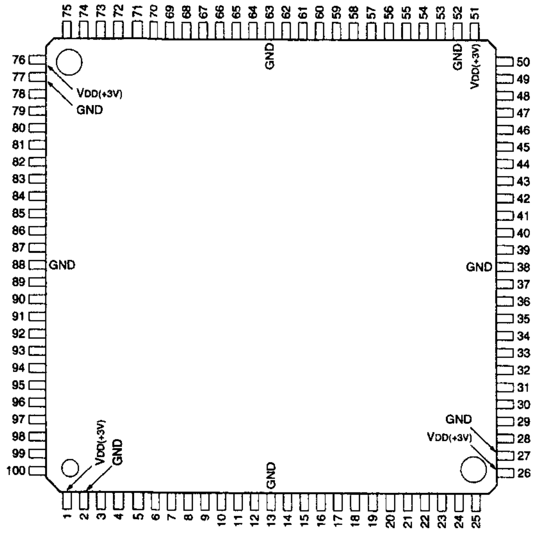

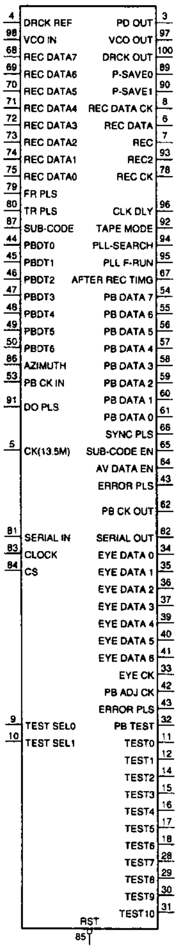

INPUT

AZIMUTH	; AZIMUTH ID SIGNAL
CK (13.5M)	; 13.5MHz PLL ADJUSTING CLOCK
CLOCK	; MICROCOMPUTER CLOCK INPUT
CS	; MICROCOMPUTER CHIP SELECT
DO PLS	; DROPOUT PULSE
DRCK REF	; DRCK CLOCK REFERENCE
FR PLS	; FRAME PULSE
PBDT0 - 6	; PLAYBACK DATA
PB CK IN	; PLAYBACK CLOCK INPUT
RST	; SYSTEM RESET (L = RESET)
SERIAL IN	; MICROCOMPUTER SERIAL DATA INPUT
SUB-CODE	; SUB-CODE AREA SIGNAL
TEST SEL0, 1	; TEST SIGNAL MODE
TR PLS	; TRACK PULSE
VCO IN	; DRCK PLL OSCILLATOR INPUT

OUTPUT

AFTER REC TIMG	; AFTER RECORDING TIMING
AV DATA EN	; AUDIO/VIDEO DATA ENABLE PERIOD (H = ENABLE)
CLK DLY	; DRCK CLOCK DELAY ROUGH ADJUSTMENT
DRCK OUT	; DRCK PLL OUTPUT
EYE CK	; EYE-PATTERN CHECK CLOCK (TEST DATA)
EYE DATA 0 - 6	; EYE-PATTERN CHECK DATA (TEST DATA)
ERROR PLS	; ERROR PULSE
PB ADJ CK	; 1/25 PLAYBACK CLOCK (FOR ADJUSTMENT)
PB CK OUT	; PLAYBACK CLOCK OUTPUT
PB DATA 0 - 7	; PLAYBACK DATA
PD OUT	; DRCK PLL PHASE DETECT
PLL F-RUN	; PLL FREE-RUN MODE
PLL-SEARCH	; PLL HIGH-SPEED SEARCH MODE
P-SAVE0, 1	; POWER SAVE (P-SAVE0 = EVEN CH, P-SAVE1 = ODD CH)
REC	; RECORDING PERIOD
REC2	; RECORDING PERIOD
REC CK	; RECORDING SYSTEM CLOCK (5MHz)
REC DATA	; RECORDING DATA
REC DATA 0 - 7	; RECORDING DATA
REC DATA CK	; CLOCK (41.85MHz) FOR RECORDING DATA
SERIAL OUT	; MICROCOMPUTER SERIAL DATA OUTPUT
SUB CODE EN	; SUB-CODE ENABLE PERIOD (H = ENABLE)
SYNC PLS	; SYNC PULSE
TAPE MODE	; EQ MP TAPE MODE
VCO OUT	; DRCK PLL OSCILLATOR OUTPUT

INPUT/OUTPUT

PB TEST	; TEST SIGNAL I/O FOR PLAYBACK SYSTEM

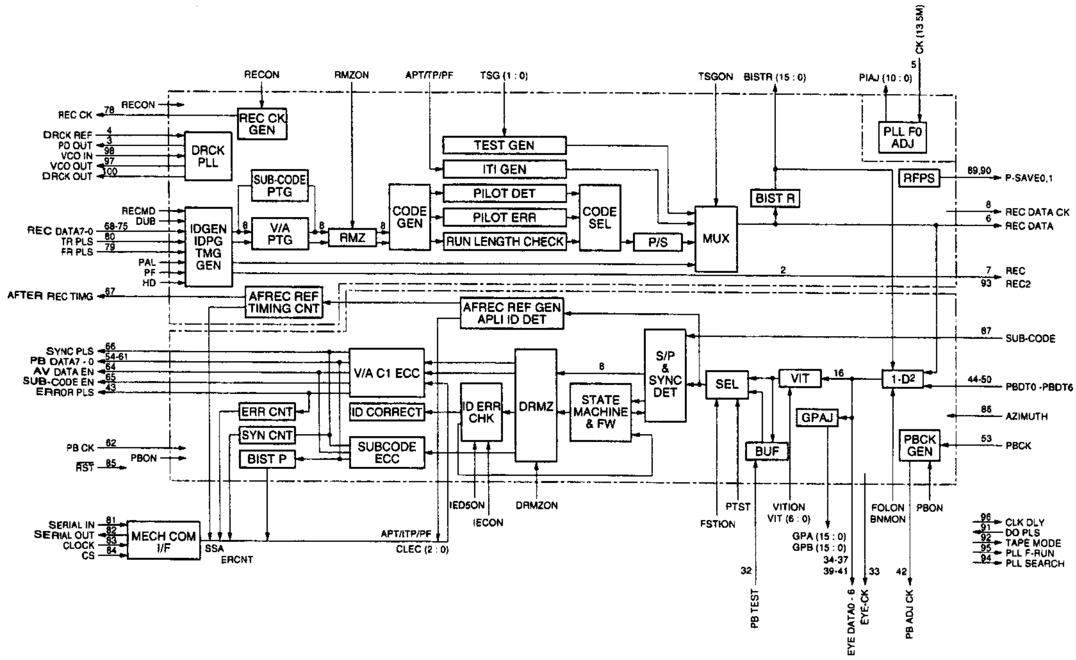

CXD2202Q (SONY)

SERVO IC
-TOP VIEW-

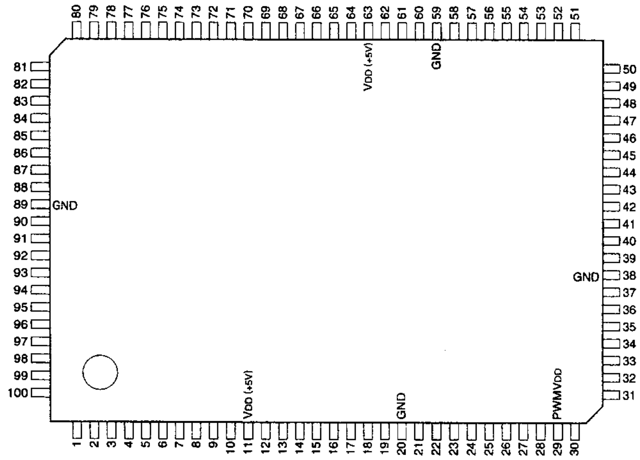

(VDD = +5V)

PIN No.	I/O	SIGNAL	PIN No.	I/O	SIGNAL	PIN No.	I/O	SIGNAL	PIN No.	I/O	SIGNAL
1	I	FG1/IP24	26	I/O	IOP2	51	I/O	D7	76	O	PPG11/OP21
2	I	FG0/IP23	27	I/O	IOP1	52	I/O	D6	77	O	PPG10/OP20
3	I	PBH/IP22	28	I/O	IOP0	53	I/O	D5	78	O	PPG0F/OP17
4	I	SYNC1/IP21	29	—	PWM VDD	54	I/O	D4	79	O	PPG0E/OP16
5	I	SYNC0/IP20	30	O	PWM7/OP37	55	I/O	D3	80	O	PPG0D/OP15
6	I	FG02/IP14	31	O	PWM6/OP36	56	I/O	D2	81	O	PPG0C/OP14
7	I	FG01/IP13	32	O	PWM5/OP35	57	I/O	D1	82	O	PPG0B/OP13
8	I	FG00/IP12	33	O	PWM4/OP34	58	I/O	D0	83	O	PPG0A/OP12
9	I	CTL/IP11	34	O	PWM3/OP33	59	—	GND	84	O	PPG09/OP11
10	I	LAT/IP10	35	O	PWM2/OP32	60	I	RES	85	O	PPG08/OP10
11	—	VDD	36	O	PWM1/OP31	61	I	MD1	86	O	CLKO
12	I	UD/IP07	37	O	PWM0/OP30	62	I	MD0	87	I	EXTAL
13	I	CCLK/IP06	38	—	GND	63	—	VDD	88	O	XTAL
14	I	FGC1/IP05	39	I	AS14	64	I	WR	89	—	GND
15	I	FGC0/IP04	40	I	AS13	65	I	RD	90	O	PPG07/OP07
16	I	FGB1/IP03	41	I	A15	66	I	CE	91	O	PPG06/OP06
17	I	FGB0/IP02	42	I	A14	67	O	IREQ2	92	O	PPG05/OP05
18	I	FGA1/IP01	43	I	A13	68	O	IREQ1	93	O	PPG04/OP04
19	I	FGA0/IP00	44	I	A6	69	O	IREQ0	94	O	PPG03/OP03
20	—	GND	45	I	A5	70	I	FXSEL	95	O	PPG02/OP02
21	I/O	IOP7	46	I	A4	71	O	OP26	96	O	PPG01/OP01
22	I/O	IOP6	47	I	A3	72	O	EXCS1/OP25	97	O	PPG00/OP00
23	I/O	IOP5	48	I	A2	73	O	EXCS0/OP24	98	I	FG12/IP27
24	I/O	IOP4	49	I	A1	74	O	PPG13/OP23	99	I	FG11/IP26
25	I/O	IOP3	50	I	A0	75	O	PPG12/OP22	100	I	FG10/IP25

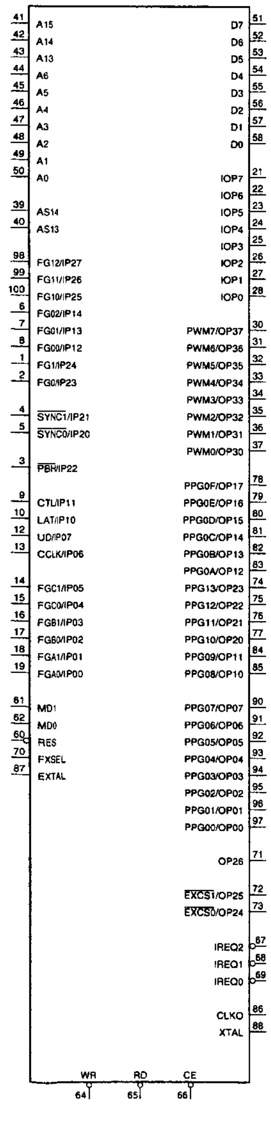

INPUT

A0 - A15 ; ADDRSSS BUS
AS13, AS14 ; SELECTING CONDITION OF ADDRESS DECODER AS13 AND AS14 BITS
CCLK , 8-BIT COUNTER CLOCK INPUT
CE ; CHIP ENABLE
CTL ; RESOLUTION 2.5MHz WITH EDGE SELECT FUNCTION.
WITH FREQUENCY DIVISION MASK TIMER
EXTAL ; CRYSTAL OSCILLATION OR EXTERNAL CLOCK INPUT
FG0 ; RESOLUTON 2.5MHz
FG00 - FG02 ; FREQUENCY DIVISION ENABLE RESOLUTION 2.5MHz.
WITH FREQUENCY DIVISION MASK TIMER
FG1 ; RESOLUTION 2.5MHz BOTH EDGES
FG10 ; EDGE SELECTION ENABLE RESOLUTION 10MHz
FG11, FG12 ; FREQUENCY DIVISION ENABLE RESOLUTION 10MHz
FGA0 ; PERFORMS FORWARD/REVERSE ROTATION DETECTION
AND 4FG COUNT (UP/DOWN) BY FGA0 AND FGA1. 10BITS. UP/DOWN IS MADE BY CONTROLLING THE UP/DOWN OF 8-BIT COUNTER.
FGA1 ; 4FG PERFORMS FREQUENCY DIVISION AND FRC CAPTURE
THROUGH MASK TIMER.
*1 : SELECTS ONE OF FGA0 TO FGC1 INPUT AND DETECTS BOTH EDGES AND PERFORM THE FRC CAPTURE THROUGH THE MASK TIMER.
FGB0 ; PERFORMS FORWARD/REVERSE ROTATION DETECTION AND 4FG COUNT BY FGB0 AND FGB1.
FGB1 ; *1 : SELECTS ONE OF FGA0 TO FGC1 INPUT AND DETECTS BOTH EDGES AND PERFORM THE FRC CAPTURE THROUGH THE MASK TIMER.
FGC0 ; PERFORMS FORWARD/REVERSE ROTATION DETECTION AND 4FG COUNT BY FGC0 AND FGC1.
FGC1 ; *1 : SELECTS ONE OF FGA0 TO FGC1 INPUT AND DETECTS BOTH EDGES AND PERFORM THE FRC CAPTURE THROUGH THE MASK TIMER.
FXSEL ; FREQUENCY DIVISION SELECTION CLOCK INPUT
LAT ; EXTERNAL LATCH TIMING OF UP/DOWN COUNTER
MD0, 1 ; TEST MODE DESIGNATION
PBH ; INPUT OF COMPOSITE SYNC OR H SYNC.
RESOLUTION 10MHz. WITH HALF H KILLER.
RD ; REDE
RES ; RESET
SYNC0, 1 ; INPUT OF COMPOSITE SYNC OR V SYNC. RESOLUTION 2.5MHz
UD ; 8-BIT COUNTER UP/ DOWN INPUT
WR ; WRITE

OUTPUT

CLKO ; CLOCK OUTPUT
EXCS0, 1 ; DECODE AT ADDRESS A3 LEVEL
IREQ0 , INTERRUPTION SIGNAL OF FRC CAPTURE UNIT
IREQ1 , COINCIDENCE INTERRUPTION OF PPG0
IREQ2 ; COINCIDENCE INTERRUPTION OF PPG1
OP26 ; EXCLUSIVELY OUTPUT PORT
PPG00 - PPG0F
PPG10 - PPG13 ; PROGRAMMABLE PULSE GENERATOR RESOLUTION 1.25MHz
PPG00 : WITH HLOCK
PWM0 - PWM5 ; PWM OUTPUT NORMALLY PWM, OR PWM0 AND PWM1, PWM2 AND PWM3, OR PWM4 AND PWM5 OUTPUT SIGNAL CORRESPONDED TO PUSH-PULL.
PWM6, 7 ; PWM OUTPUT
XTAL ; CRYSTAL OSCILLATION

INPUT/OUTPUT

D0 - D7 ; DATA BUS
IOP0 - IOP7 ; SELECTS AND USES INPUT AND OUTPUT BY EVERY 1 BIT.

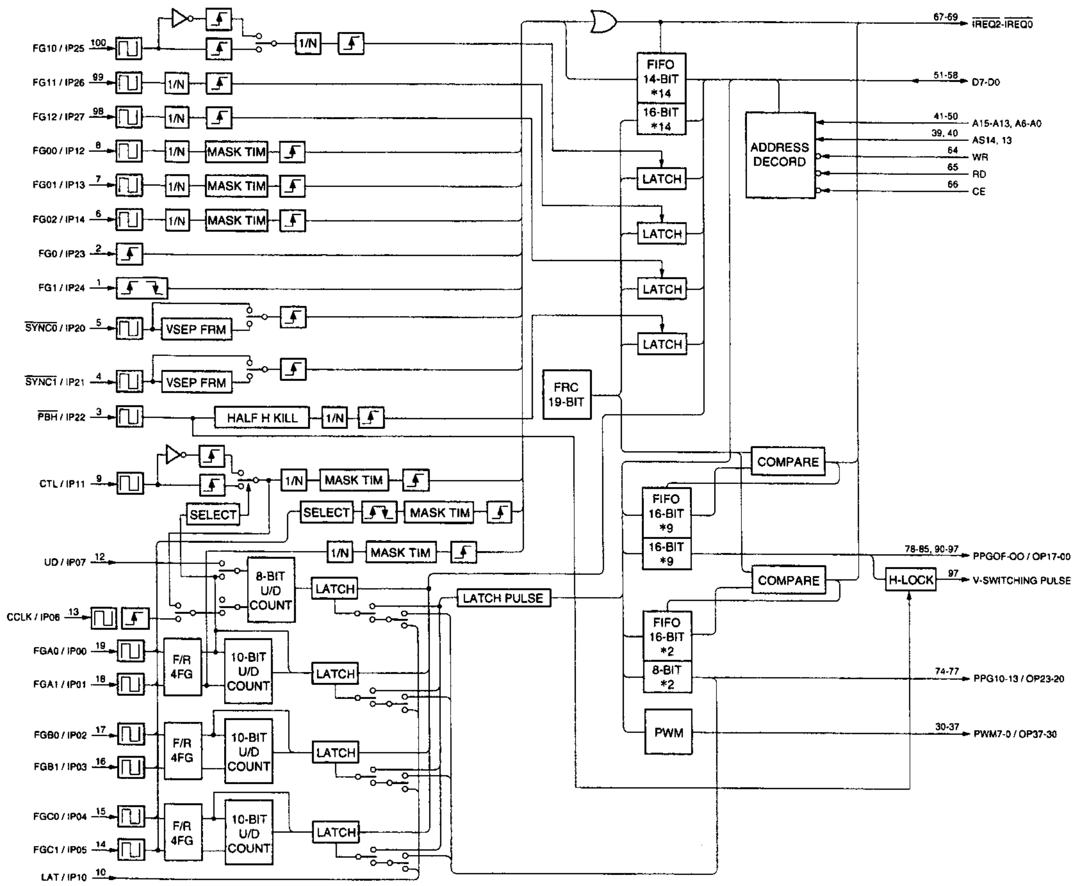
FG10 / IP25
FG11 / IP26
FG12 / IP27
FG00 / IP12
FG01 / IP13
FG02 / IP14
FG0 / IP23
FG1 / IP24
SYNC0 / IP20
SYNC1 / IP21
PBH / IP22
CTL / IP11
UD / IP07
CCLK / IP06
FGA0 / IP00
FGA1 / IP01
FGB0 / IP02
FGB1 / IP03
FGC0 / IP04
FGC1 / IP05
LAT / IP10
1/N
MASK TIM
VSEP FRM
HALF H KILL
SELECT
8-BIT U/D COUNT
10-BIT U/D COUNT
F/R 4FG
LATCH
LATCH PULSE
FIFO 14-BIT *14
16-BIT *14
FRC 19-BIT
ADDRESS DECORD
COMPARE
FIFO 16-BIT *9
16-BIT *9
FIFO 16-BIT *2
8-BIT *2
PWM
H-LOCK
67-69 IREQ2-IREQ0
51-58 D7-D0
41-50 A15-A13, A6-A0
39, 40 AS14, 13
64 WR
65 RD
66 CE
78-85, 90-97 PPGOF-OO / OP17-00
97 V-SWITCHING PULSE
74-77 PPG10-13 / OP23-20
30-37 PWM7-0 / OP37-30

CXD2190R-T6 (SONY)

DIGITAL VCR AUDIO REC/PB SIGNAL PROCESSOR

-TOP VIEW-

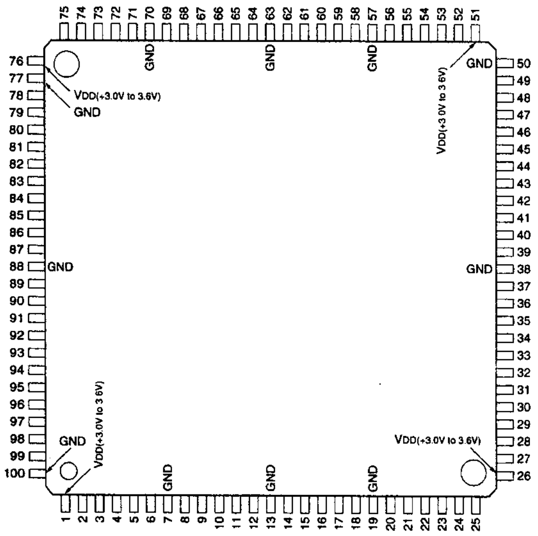

PIN NO.	I/O	SIGNAL	PIN NO.	I/O	SIGNAL	PIN NO.	I/O	SIGNAL
1	—	VDD	35	O	EMAP	69	I/O	D01
2	O	PBON	36	O	BCKO	70	—	GND
3	O	DIIN	37	I	LRCI	71	I/O	D02
4	I	TTCK	38	—	GND	72	I/O	D03
5	I	FLTT	39	I	256CK	73	I/O	D04
6	I	FLTA	40	I	BCKI	74	I/O	D05
7	—	GND	41	O	LRCO	75	I/O	D06
8	I	TRCK	42	O	LSBO	76	—	VDD
9	I/O	TSDA	43	O	DATO	77	—	GND
10	I/O	TSCK	44	I	DATI	78	O	AO10
11	O	OTEN	45	O	DSPO	79	O	CS
12	I	STRT	46	O	ATC	80	I/O	D07
13	—	GND	47	O	ATLT	81	O	PRST
14	I	SFDP	48	O	AO11	82	O	PCEZ
15	O	SFDR	49	O	OE	83	O	VEN
16	I	P-SAVE	50	—	GND	84	O	HEN
17	I	MUTE	51	—	VDD	85	O	ERS
18	I	RST	52	O	AO09	86	O	SLMX
19	—	GND	53	O	AO08	87	O	SLVX
20	—	BC	54	O	AO13	88	—	GND
21	—	TCK	55	O	WE	89	I	TSTM
22	—	TDI	56	O	AO14	90	I	TSAD
23	—	TENA1	57	—	GND	91	O	DV32
24	—	TDO	58	O	AO12	92	O	INT
25	I	VST	59	O	AO07	93	I	JRDY
26	—	VDD	60	O	AO06	94	I	JDAT
27	I	SCK	61	O	AO05	95	O	TNOM
28	I	SPSI	62	O	AO04	96	O	TSTN
29	O	SPSO	63	—	GND	97	O	TBIS
30	I	DSP	64	O	AO03	98	O	ERRF
31	I	ATT	65	O	AO02	99	I/O	TSG
32	I	ACS	66	O	AO01	100	—	GND
33	O	FSE2	67	O	AO00			
34	O	FSE1	68	I/O	D00			

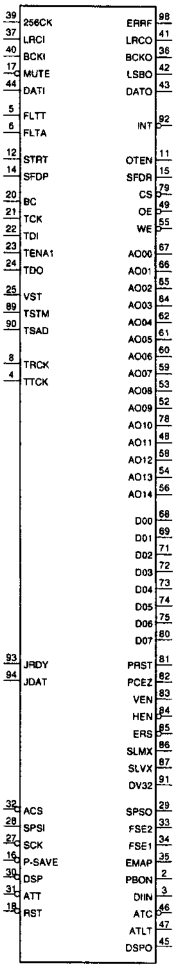

INPUT

256CK ; 256fs CLOCK INPUT
ACS ; COMMUNICATION CHIP SELECT (L = ACTIVE) INPUT
ATT ; AUTO ATTENUATION INTERFACE CHIP SELECT INPUT
BCKI ; 64fs INPUT
DATI ; AUDIO DATA INPUT
DSP ; ADSP INTERFACE CHIP SELECT INPUT
FLTA , FRAME SIGNAL FOR RECORDING INPUT
FLTT ; FRAME SIGNAL FOR TRANSMISSION AND PLAYBACK INPUT
JDAT ; EXTERNAL DEVICE INTERFACE INPUT
JRDY ; EXTERNAL DEVICE INTERFACE INPUT
LRCI ; fs CLOCK INPUT
MUTE ; DIRECT MUTE INPUT (L = MUTE)
P-SAVE ; POWER SAVE INPUT (L = POWER SAVE)
RST ; RESET INPUT (L = RESET)
SCK ; SYSTEM CLOCK INPUT
SFDP ; PLAYBACK DATA INPUT
SPSI ; COMMUNICATION DATA INPUT
STRT ; REC/PB DATA COMMUNICATION START PULSE INPUT
TRCK ; MAIN CLOCK INPUT (NTSC = 18.1259MHz, PAL = 18.144MHz)
TSAD ; FOR TEST
TSTM ; FOR TEST
TTCK ; AUTO ATTENUATION AND ADSP INTERFACE CLOCK INPUT
VST ; FOR TEST

OUTPUT

ATC ; AUTO ATTENUATION INTERFACE CLOCK OUTPUT
ATLT ; AUTO ATTENUATION INTERFACE LATCH PULSE OUTPUT
AO00 - AO14 ; EXTERNAL RAM ADDRESS OUTPUT
BCKO ; 64fs OUTPUT
CS ; EXTERNAL RAM CHIP SELECT SIGNAL OUTPUT
PBON ; MICROCOMPUTER INTERFACE SERIAL/PARALLEL OUTPUT (WORD2/BIT0)
DATO ; AUDIO DATA OUTPUT
DIIN ; MICROCOMPUTER INTERFACE SERIAL/PARALLEL OUTPUT (WORD2/BIT1)
DSPO ; ADSP INTERFACE CLOCK OUTPUT
DV32 ; EXTERNAL DEVICE INTERFACE OUTPUT
EMPA ; MICROCOMPUTER INTERFACE SERIAL/PARALLEL OUTPUT (WORD2/BIT3)
ERRF ; PB AUDIO DATA ERROR ID SIGNAL OUTPUT
ERS ; EXTERNAL DEVICE RESET OUTPUT
FSE1 ,FSE2 ; MICROCOMPUTER INTERFACE SERIAL/PARALLEL OUTPUT (WORD2/BIT4, 5)
HEN ; EXTERNAL DEVICE INTERFACE OUTPUT
INT ; PHASE COMPARATOR CLOCK OUTPUT
LRCO ; fs OUTPUT
LSBO ; AUDIO DATA OUTPUT (LSB FIRST)
OE ; EXTERNAL RAM OUTPUT ENABLE SIGNAL OUTPUT
OTEN ; ENABLE OUTPUT FOR RECORDING DATA TRANSMISSION
PCEZ ; EXTERNAL DEVICE INTERFACE OUTPUT
PRST ; EXTERNAL DEVICE INTERFACE OUTPUT
SFDO ; RECORDING DATA OUTPUT
SLVX ; EXTERNAL DEVICE INTERFACE OUTPUT
SLXM ; EXTERNAL DEVICE INTERFACE OUTPUT
SPSO ; COMMUNICATION DATA OUTPUT
TBIS ; FOR TEST
TNOM ; FOR TEST
TSTN ; FOR TEST
VEN ; EXTERNAL DEVICE INTERFACE OUTPUT
WE ; EXTERNAL RAM WRITE ENABLE SIGNAL OUTPUT

INPUT/OUTPUT

D00 - D07 ; EXTERNAL RAM DATA INPUT/OUTPUT
TSCK ; FOR TEST
TSDA ; FOR TEST
TSG ; FOR TEST

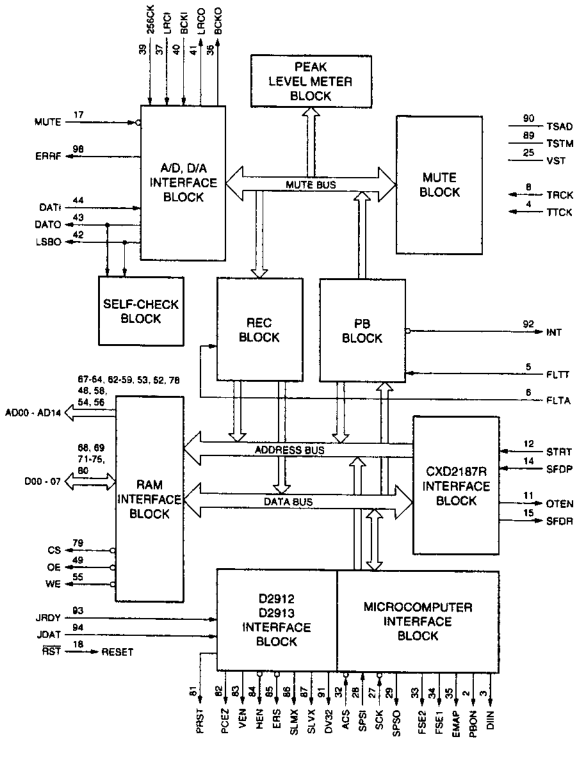

CXD2302Q-T4 (SONY)

C-MOS 8-BIT 50MSPS VIDEO A/D CONVERTER

- TOP VIEW -

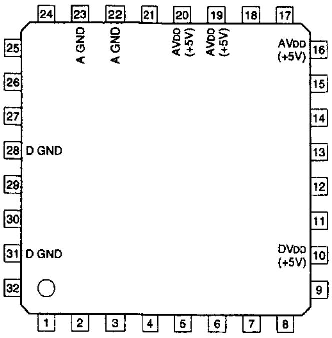

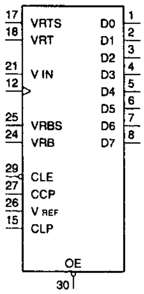

PIN NO.	I/O	SIGNAL	PIN NO.	I/O	SIGNAL
1	O	D0 (LSB)	17	I	VRTS
2	O	D1	18	I	VRT
3	O	D2	19	–	A VDD
4	O	D3	20	–	A VDD
5	O	D4	21	I	V IN
6	O	D5	22	–	A GND
7	O	D6	23	–	A GND
8	O	D7 (MSB)	24	I	VRB
9	–	TEST	25	I	VRBS
10	–	D VDD	26	I	V REF
11	–	TEST	27	I	CCP
12	I	CLK	28	–	D GND
13	–	NC	29	I	$\overline{CL}$
14	–	NC	30	I	$\overline{OE}$
15	I	CLP	31	–	D GND
16	–	A VDD	32	–	NC

INPUT

CCP ; CLAMP CONTROL VOLTAGE FOR INTEGRATOR
$\overline{CLE}$; CLAMP ENABLE
CLK ; CLOCK
CLP ; CLAMP PULSE
$\overline{OE}$; OUTPUT ENABLE
V IN ; ANALOG
VRB ; REFERENCE VOLTAGE (BOTTOM)
VRBS ; SELF REFERENCE VOLTAGE SHORT TO AGND (+0.6 V/BOTTOM)
VREF ; VOLTAGE REFERENCE FOR CLAMP
VRT ; REFERENCE VOLTAGE (TOP)
VRTS ; SELF REFERENCE VOLTAGE SHORT TO AVDD (+2.5 V/TOP)

OUTPUT

D0-D7 ; DATA

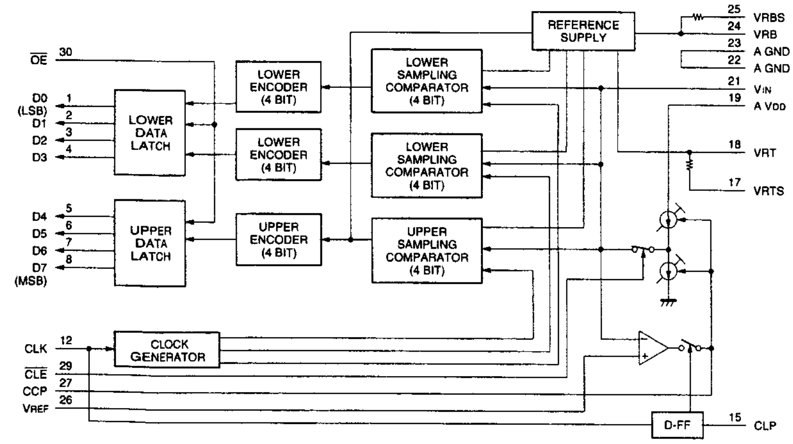

CXD2307R-T4 (SONY)FLAT PACKAGE
CXD2307R-T6

C-MOS 10-BIT 50MSPS RGB 3CHANNEL D/A CONVERTER
— TOP VIEW —

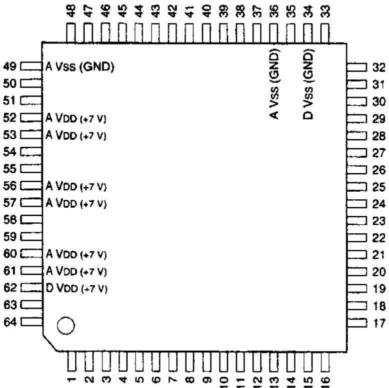

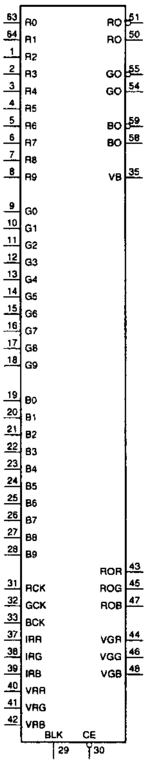

PIN No.	I/O	SIGNAL	PIN No.	I/O	SIGNAL	PIN No.	I/O	SIGNAL	PIN No.	I/O	SIGNAL
1	I	R2	17	I	G8	33	I	BCK	49	—	AVss
2	I	R3	18	I	G9	34	—	DVss	50	O	RO
3	I	R4	19	I	B0 (LSB)	35	O	VB	51	O	$\overline{RO}$
4	I	R5	20	I	B1	36	—	AVss	52	—	AVDD
5	I	R6	21	I	B2	37	I	IRR	53	—	AVDD
6	I	R7	22	I	B3	38	I	IRG	54	O	GO
7	I	R8	23	I	B4	39	I	IRB	55	O	$\overline{GO}$
8	I	R9	24	I	B5	40	I	VRR	56	—	AVDD
9	I	G0 (LSB)	25	I	B6	41	I	VRG	57	—	AVDD
10	I	G1	26	I	B7	42	I	VRB	58	O	BO
11	I	G2	27	I	B8	43	I	ROR	59	O	$\overline{BO}$
12	I	G3	28	I	B9	44	I	VGR	60	—	AVDD
13	I	G4	29	I	BLK	45	I	ROG	61	—	AVDD
14	I	G5	30	I	$\overline{CE}$	46	I	VGG	62	—	DVDD
15	I	G6	31	I	RCK	47	I	ROB	63	I	R0 (LSB)
16	I	G7	32	I	GCK	48	I	VGB	64	I	R1

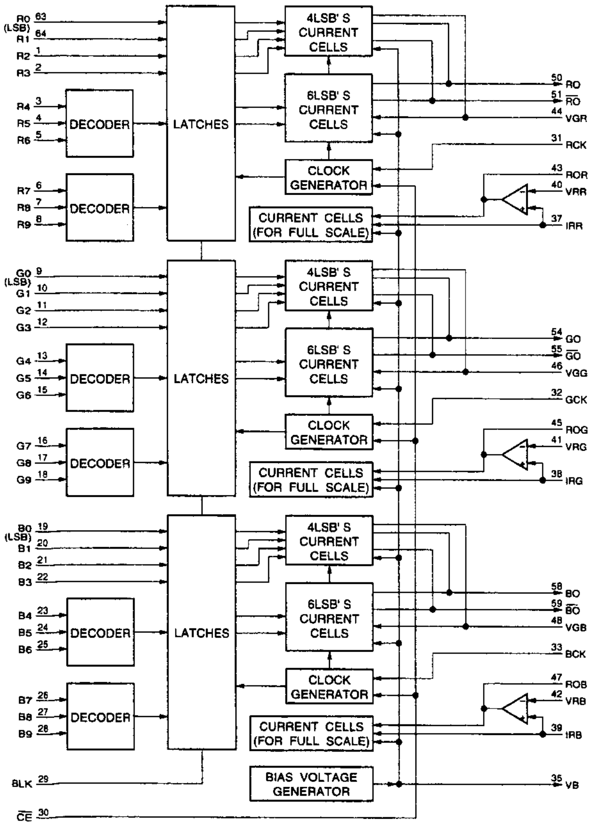

CXD2705AQ (SONY)FLAT PACKAGE

C-MOS DIGITAL AUDIO SIGNAL PROCESSOR
-TOP VIEW-

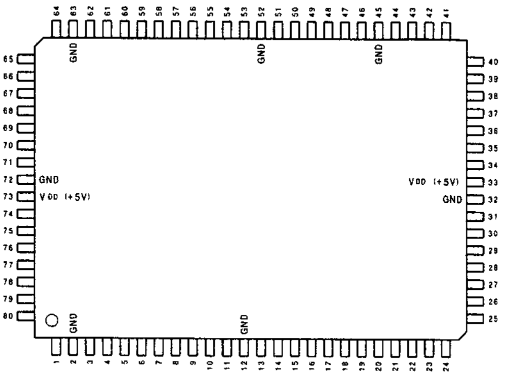

PIN NO.	I/O	SYMBOL	PIN NO.	I/O	SYMBOL	PIN NO.	I/O	SYMBOL	PIN NO.	I/O	SYMBOL
1	O	EA0	21	O	TRDT	41	I	LRK0	61	I/O	ED8
2	-	GND	22	I	RVDT	42	I	LRK1	62	I/O	ED9
3	O	EA1	23	I	SCK	43	I	BCK0	63	-	GND
4	O	EA2	24	I	XLAT	44	I	BCK1	64	I/O	ED10 (GND)
5	O	EA3	25	I	TA5	45	-	GND	65	I/O	ED11 (GND)
6	O	EA4	26	I	TA4	46	O	D2BK	66	O	XOE
7	O	EA5	27	O	BFOT	47	O	D2LR	67	O	CAS
8	O	EA6	28	O	CLKO	48	O	D4BK	68	I/O	ED12
9	O	EA7	29	I	CLKI	49	O	D4LR	69	I/O	ED13
10	O	EA8	30	I	TA3	50	I/O	ED0	70	I	TD15
11	I	TA7	31	I	TA2	51	I	TST1	71	I	TD14
12	-	GND	32	-	GND	52	-	GND	72	-	GND
13	I	TA6	33	-	VDD (+5V)	53	I	TST0	73	-	VDD (+5V)
14	I	XRST	34	I	TA1	54	I/O	ED1	74	I	TD13
15	O	SP0	35	I	TA0	55	I/O	ED2	75	I	TD12
16	O	SP1	36	O	SOC	56	I/O	ED3	76	I/O	ED14
17	O	SP2	37	O	SOB	57	I/O	ED4	77	I/O	ED15
18	O	MOVF	38	O	SOA	58	I/O	ED5	78	O	XWE
19	O	AOVF	39	O	SIB	59	I/O	ED6	79	O	RAS
20	O	REDY	40	O	SIA	60	I/O	ED7	80	O	EA9

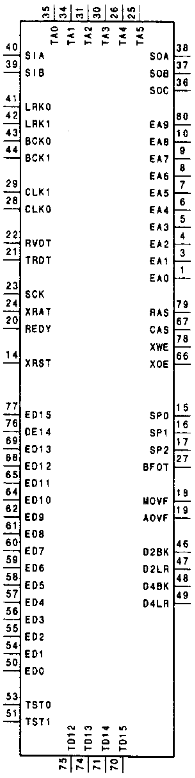

INPUT
BCK0, BCK1 : BIT CLOCK
CLKI : CLOCK
LRK0, LRK1 : LR CLOCK
RVDT : DATA FOR HC I/F
SCK : SIFT CLOCK FOR HC I/F
SIA, SIB : SERIAL DATA
TA0-TA7 : TEST
TD12-TD15 : TEST
TST0, TST1 : TEST (NORMAL "L")
XLAT : MODE PARTITION SIGNAL
XRST : RESET

OUTPUT
AOVF : ALU OVERFLOW SIGNAL
BFOT : CLOCK BUFFER
CAS : COLUMN-ADDRESS STROBE FOR EXT. DATA RAM
CLKO : CLOCK
D2BK : 1/2 BIT CLOCK
D2LR : 1/2 LR CLOCK
D4BK : 1/4 BIT CLOCK
D4LR : 1/4 LR CLOCK
EA0-EA9 : ADDRESS FOR EXT. DATA RAM
MOVF : MAC OVERFLOW SIGNAL
RAS : ROW-ADDRESS STROBE FOR EXT. DATA RAM
REDY : READY SIGNAL FOR HC I/F
SOA-SOC : SERIAL DATA
SP0-SP2 : STATIC PORT 0, 1, 2
TRDT : DATA FOR HC I/F
XOE : OUTPUT ENABLE FOR EXT. DATA RAM
XWE : WRITE ENABLE FOR EXT. DATA RAM

INPUT/OUTPUT
ED0-ED15 : DATA INPUT/OUTPUT FOR EXT. DATA RAM

CXD2913AQ (SONY)

C-MOS AUDIO PLL OSCILLATOR
-TOP VIEW-

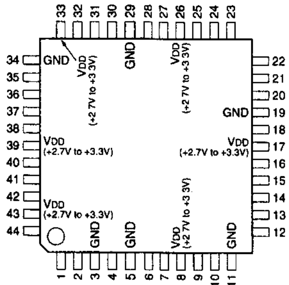

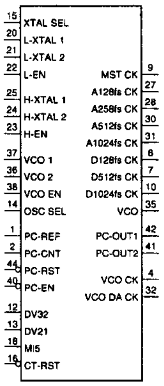

INPUT

CT-RST ; COUNTER RESET INPUT
DV21 ; SPEED MODE SELECT INPUT (H = x2 SPEED, L = x1 SPEED)
DV32 ; FS SELECT INPUT (H = 32kHz, L = 44.1kHz/48kHz)
H-EN ; HIGHER CRYSTAL OSCILLATOR ENABLE INPUT (H = ENABLE)
H-XTAL 1 ; 49.152MHz CRYSTAL OSCILLATOR INPUT
L-EN ; LOWER CRYSTAL OSCILLATOR ENABLE INPUT (H = ENABLE)
L-XTAL 1 ; 45.1584MHz CRYSTAL OSCILLATOR INPUT
MI5 ; COUNTER DIVIDING RATIO SELECT INPUT (H = 1/1.5, L = 1/1)
OSC SEL ; MASTER CLOCK SELECT INPUT (H = VCO, L = CRYSTAL)
PC-CNT ; PHASE COMPARATOR CONTROL INPUT
PC EN ; PC-OUT2 ENABLE INPUT
PC-REF ; PHASE COMPARATOR REFERENCE INPUT
PC-RST ; PHASE COMPARATOR RESET INPUT
VCO 1 ; VCO INPUT
VCO EN ; VCO ENABLE INPUT (H = ENABLE)
XTAL SEL ; MASTER CLOCK SELECT INPUT (H = 48MHz, L = 45MHz)

OUTPUT

A128fs CK ; ANALOG SYSTEM A/D CONVERTER 128fs CLOCK
A258fs CK ; ANALOG SYSTEM A/D AND D/A CONVERTERS 258fs CLOCK
A512fs CK ; ANALOG SYSTEM D/A CONVERTER 512fs CLOCK
A1024fs CK ; ANALOG SYSTEM D/A CONVERTAR 1024fs CLOCK
D128fs CK ; DIGITAL SYSTEM 128fs CLOCK
D512fs CK ; DIGITAL SYSTEM 512fs CLOCK
D1024fs CK ; DIGITAL SYSTEM 1024fs CRYSTAL OSCILLATOR CLOCK
H-XTAL 2 ; 49.152MHz CRYSTAL OSCILLATOR OUTPUT
L-XTAL 2 ; 45.1584MHz CRYSTAL OSCILLATOR OUTPUT
MST CK ; MASTER CLOCK (1024fs) OUTPUT
PC-OUT1 ; PHASE COMPARATOR OUTPUT
PC-OUT2 ; PHASE COMPARATOR OUTPUT (WITH ENABLE CONTROL)
VCO ; VCO OUTPUT
VCO 2 ; VCO OUTPUT
VCO CK ; VCO CLOCK (512fs) OUTPUT
VCO DA CK ; VCO 512fs D/A CLOCK

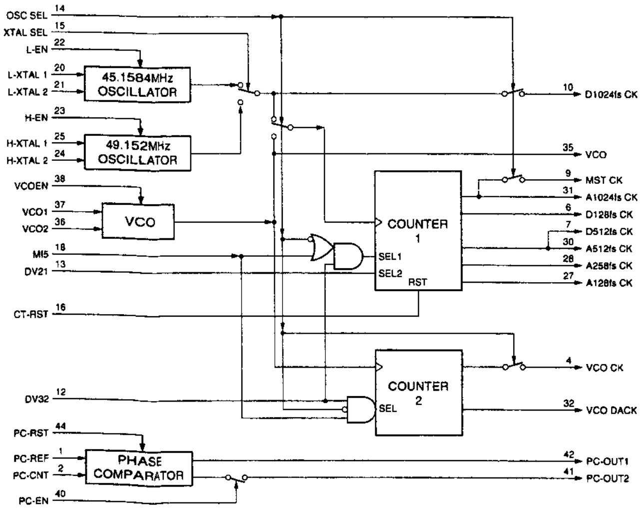

CXD8176AQ (SONY)

C-MOS DUAL PORT RAM CONTROLLER
-TOP VIEW-

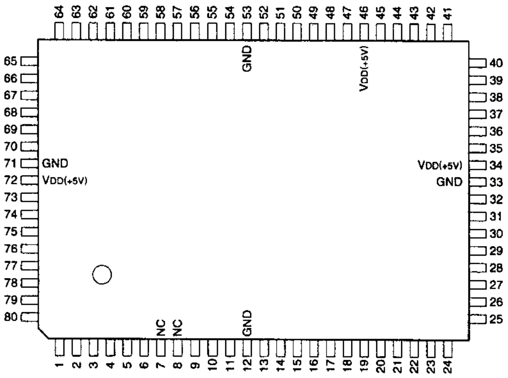

(VDD = +5V)

PIN NO.	I/O	SIGNAL	PIN NO.	I/O	SIGNAL	PIN NO.	I/O	SIGNAL	PIN NO.	I/O	SIGNAL
1	I/O	D0L	21	I/O	D7R	41	I/O	D6M	61	I	A10L
2	I	$\overline{WRL}$	22	I/O	D6R	42	I/O	D5M	62	I	A9L
3	I	$\overline{RDL}$	23	I/O	D5R	43	I/O	D4M	63	I	A8L
4	O	$\overline{WAITL}$	24	I/O	D4R	44	I/O	D3M	64	I	A7L
5	I	$\overline{CSL}$	25	I/O	D3R	45	I/O	D2M	65	I	A6L
6	I	$\overline{CKL}$	26	I/O	D2R	46	—	VDD	66	I	A5L
7	—	NC	27	I/O	D1R	47	I/O	D1M	67	I	A4L
8	—	NC	28	I/O	D0R	48	I/O	D0M	68	I	A3L
9	I	A10R	29	I	$\overline{WRR}$	49	O	A0M	69	I	A2L
10	I	A9R	30	I	$\overline{RDR}$	50	O	A1M	70	I	A1L
11	I	A8R	31	O	$\overline{WAITR}$	51	O	A2M	71	—	GND
12	—	GND	32	I	$\overline{CSR}$	52	O	A3M	72	—	VDD
13	I	A7R	33	—	GND	53	—	GND	73	I	A0L
14	I	A6R	34	—	VDD	54	O	A4M	74	I/O	D7L
15	I	A5R	35	I	CKR	55	O	A5M	75	I/O	D6L
16	I	A4R	36	I	CKT	56	O	A6M	76	I/O	D5L
17	I	A3R	37	O	$\overline{WEM}$	57	O	A7M	77	I/O	D4L
18	I	A2R	38	O	$\overline{OEM}$	58	O	A8M	78	I/O	D3L
19	I	A1R	39	O	$\overline{CEM}$	59	O	A9M	79	I/O	D2L
20	I	A0R	40	I/O	D7M	60	O	A10M	80	I/O	D1L

INPUT

A0L - A10L ; ADDRESS BUS OF PORT L
A0R - A10R ; ADDRESS BUS OF PORT R
CKL ; CLOCK OF PORT L
CKR ; CLOCK OF PORT R
CKT ; CLOCK
CSL ; CHIP SELECT OF PORT L
CSR ; CHIP SELECT OF PORT R
RDL ; READ STROBE OF PORT L
RDR ; READ STROBE OF PORT R
WRL ; WRITE STROBE OF PORT L
WRR ; WRITE STROBE OF PORT R

OUTPUT

A0M - A10M ; ADDRESS BUS FOR MEMORY DEVICE
CEM ; CHIP ENABLE FOR MEMORY DEVICE
OEM ; OUTPUT ENABLE FOR MEMORY DEVICE
WAITL ; WAIT OF PORT L
WAITR ; WAIT OF PORT R
WEM ; WRITE ENABLE FOR MEMORY DEVICE

INPUT/OUTPUT

D0L - D7L ; DATA BUS OF PORT L
D0M - D7M ; DATA BUS FOR MEMORY DEVICE
D0R - D7R ; DATA BUS OF PORT R

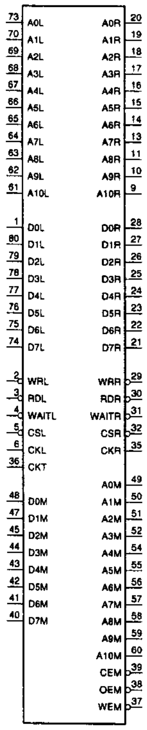

CXD3101R (SONY)

SIGNAL PROCESSOR

-TOP VIEW-

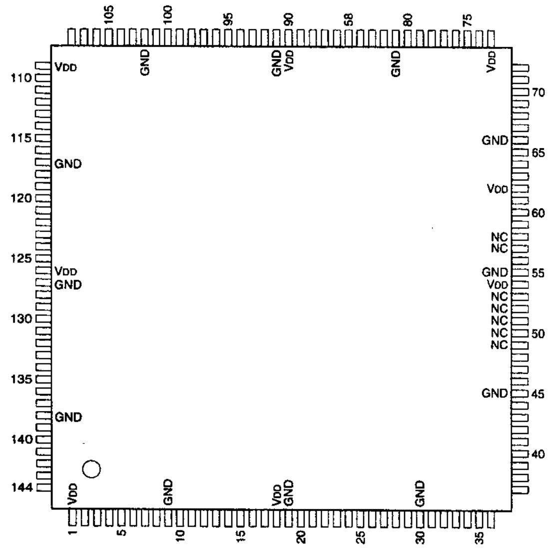

(VDD = +2.7 to +3.3V)

PIN NO.	I/O	SIGNAL	PIN NO.	I/O	SIGNAL	PIN NO.	I/O	SIGNAL	PIN NO.	I/O	SIGNAL
1	—	VDD	37	I	BTRST	73	—	VDD	109	—	VDD
2	O	REC	38	I	BTCK	74	I/O	BUP	110	I/O	B1D10
3	O	CINV	39	I	BTMS	75	I/O	B2D10	111	I/O	B1D11
4	I/O	JSYC	40	I	BTDI	76	I/O	B2D11	112	I/O	B1D12
5	I/O	JC0	41	O	BTDO	77	I/O	B2D12	113	I/O	B1D13
6	I/O	JC1	42	I	XCS	78	I/O	B2D13	114	I/O	B1D14
7	I/O	JC2	43	I	XSCK	79	I/O	B2D14	115	I/O	B1D15
8	I/O	JC3	44	I	SPSO	80	I/O	B2D15	116	I/O	B1D16
9	—	GND	45	—	GND	81	—	GND	117	—	GND
10	I/O	JC4	46	O	SPSI	82	I/O	B2D16	118	I/O	B1D17
11	I/O	JC5	47	I	XRST	83	I/O	B2D17	119	O	WCK1
12	I/O	JC6	48	I	XPS	84	O	WCK2	120	O	B1WS
13	I/O	JC7	49	—	NC	85	O	B2WS	121	O	B1WA0
14	I/O	JSYY	50	—	NC	86	O	B2WA0	122	O	B1WA1
15	I/O	JY0	51	—	NC	87	O	B2WA1	123	O	B1WA2
16	I/O	JY1	52	—	NC	88	O	B2WA2	124	O	B1WA3
17	I/O	JY2	53	—	NC	89	O	B2WA3	125	O	B1WFS
18	—	VDD	54	—	VDD	90	—	VDD	126	—	VDD
19	—	GND	55	—	GND	91	—	GND	127	—	GND
20	I	SPCK	56	I	TRCK	92	O	B2WFS	128	O	B1RFS
21	I/O	JY3	57	—	NC	93	O	B2RFS	129	O	B1RA3
22	I/O	JY4	58	—	NC	94	O	B2RA3	130	O	B1RA2
23	I/O	JY5	59	I	TSI2	95	O	B2RA2	131	O	B1RA1
24	I/O	JY6	60	I	TSI1	96	O	B2RA1	132	O	B1RA0
25	I/O	JY7	61	I	TSI0	97	O	B2RA0	133	O	B1RS
26	I	FLBKC	62	—	VDD	98	O	B2RS	134	O	RCK1
27	I	FLBKY	63	I	FLTV	99	O	RCK2	135	I/O	B1D07
28	I	JOOE	64	I/O	BKD7	100	I/O	B2D07	136	I/O	B1D06
29	I	JFOE	65	I/O	BKD6	101	I/O	B2D06	137	I/O	B1D05
30	—	GND	66	—	GND	102	—	GND	138	—	GND
31	I	BC1	67	I/O	BKD5	103	O	B2D05	139	I/O	B1D04
32	I	TCK	68	I/O	BKD4	104	O	B2D04	140	I/O	B1D03
33	I	TD1	69	I/O	BKD3	105	O	B2D03	141	I/O	B1D02
34	I	TENA1	70	I/O	BKD2	106	O	B2D02	142	I/O	B1D01
35	O	TD0	71	I/O	BKD1	107	O	B2D01	143	I/O	B1D00
36	I	VST	72	I/O	BKD0	108	O	B2D00	144	I	SD

INPUT

BC1	; CROSS CHECK BIT
BTCK	; JTAG CK
BTD1	; JTAG DI
BTMS	; JTAG MS
BTRST	; JTAG RST
FLBKC	; CHROMA PLAYBACK REFERENCE SIGNAL
FLBKY	; Y PLAYBACK REFERENCE SIGNAL
FLTV	; FIELD REFERENCE SIGNAL
JFOE	; FORCED ODD/EVEN
JOOE	; ORIGINAL ODD/EVEN
SD	; HIGH:SD LOW:HD
SPCK	; 13.5 MHz CLOCK
SPSO	; SERIAL DATA
TCK	; CROSS CHECK CLOCK
TD1	; CROSS CHECK DATA
TENA1	; CROSS CHECK TEST
TRCK	; 18.1 MHz CLOCK
TSI0-TSI2	; TEST
VST	; CROSS CHECK GROUND
XCS	; CHIP SELECT
XPS	; POWER SAVE
XRST	; RESET
XSCK	; SERIAL CLOCK

OUTPUT

BTD0	; JTAG DO
BIRA0-BIRA3/B2RA0-B2RA3	; BRAM1/BRAM2 READ ADDRESS
B1RFS/B2RFS	; BRAM1/BRAM2 READ FIELD SELECT
B1RS/B2RS	; BRAM1/BRAM2 READ STROBE
B1WA0-B1WA3/B2WA0-B2WA3	; BRAM1/BRAM2 WRITE ADDRESS
B1WFS/B2WFS	; BRAM1/BRAM2 WRITE FIELD SELECT
B1WS/B2WS	; BRAM1/BRAM2 WRITE STROBE
CINV	; CHROMA LINE SEQUENTIAL
RCK1/RCK2	; BRAM1/BRAM2 READ CLOCK
REC	; HIGH:REC, LOW:PB
SPSI	; SERIAL DATA
TD0	; CROSS CHECK DATA
WCK1/WCK2	; BRAM1/BRAM2 WRITE CLOCK

INPUT/OUTPUT

B1D00-B1D07/B2D00-B2D07	; BRAM1/BRAM2 PORT0 DATA
B1D10-B1D17/B2D10-B2D17	; BRAM1/BRAM2 PORT1 DATA
BKD0-BKD7	; BK DATA
BUP	; BUP
JC0-JC7	; CHROMA DATA
JY0-JY7	; Y DATA
JSYC	; CHROMA SYNC
JSYY	; Y SYNC

HA17431UA (HITACHI)
HA17431UA-TL

ADJUSTABLE PRECISION SHUNT REGULATOR

—FRONT VIEW—

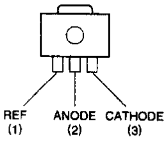

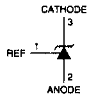

CXD8165AQ (SONY)FLAT PACKAGE
CXD8165Q (SONY)FLAT PACKAGE

C-MOS REFERENCE SYNC GENERATOR

—TOP VIEW—

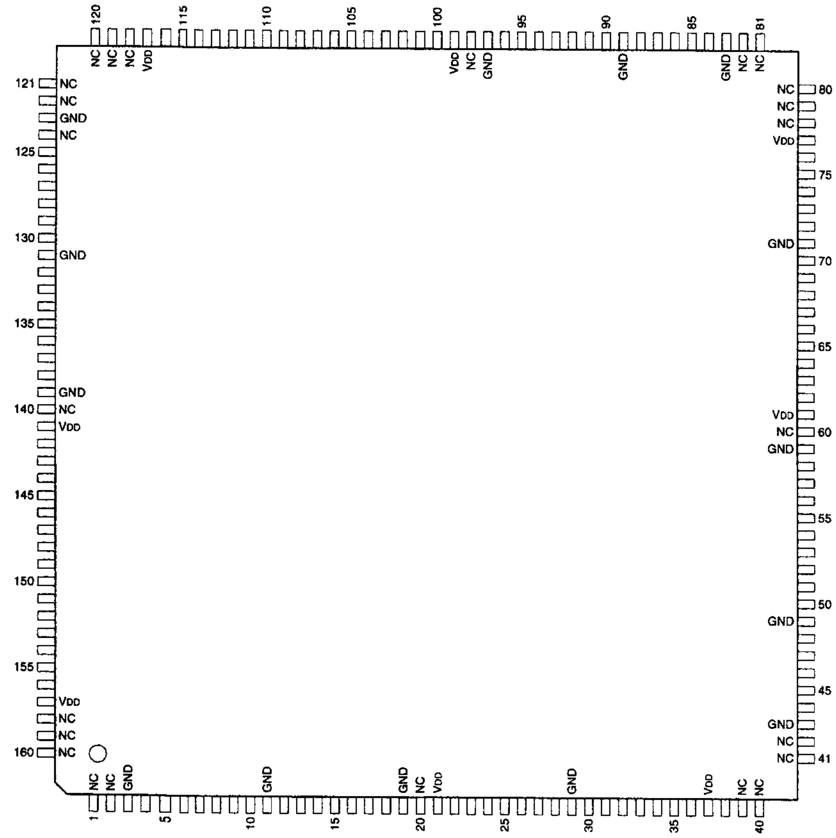

PIN NO.	I/O	SIGNAL	PIN NO.	I/O	SIGNAL	PIN NO.	I/O	SIGNAL	PIN NO.	I/O	SIGNAL
1	—	NC	41	—	NC	81	—	NC	121	—	NC
2	—	NC	42	—	NC	82	—	NC	122	—	NC
3	—	GND	43	—	GND	83	—	GND	123	—	GND
4	I/O	VBL	44	I	HR	84	I	TM2	124	—	NC
5	I/O	OBBL	45	I/O	LALT	85	O	OSC	125	O	VD0
6	I/O	OVD	46	I	ALTR	86	I	SD1	126	O	VD1
7	I/O	OFOE	47	I	CLR	87	I	SCK	127	O	VD2
8	O	OFDET	48	I	CK27	88	I	STRB	128	O	VD3
9	O	OSYNC	49	O	CK13	89	I/O	PD0	129	O	VD4
10	I	VOVR	50	I	HCK	90	I/O	PD1	130	O	VD5
11	—	GND	51	—	GND	91	—	GND	131	—	GND
12	O	OVR	52	I	SM1	92	I/O	PD2	132	O	VD6
13	O	READV	53	I	SM2	93	I/O	PD3	133	O	VD7
14	I	VP0	54	I	SM3	94	I/O	PD4	134	I	VISP
15	I	VP1	55	O	PHO	95	I/O	PD5	135	I/O	BST
16	I	VP2	56	I	PHI	96	I/O	PD6	136	I/O	O2BH
17	I	VP3	57	O	PH	97	I/O	PD7	137	I/O	HS
18	I	ADV	58	O	CLP	98	I	PCK	138	O	RZ
19	—	GND	59	—	GND	99	—	GND	139	—	GND
20	—	NC	60	—	NC	100	—	NC	140	—	NC
21	—	VDD	61	—	VDD	101	—	VDD	141	—	VDD
22	I	CONF	62	I/O	EQ	102	I	SYCK	142	I/O	F2H
23	I	SDL	63	I/O	VS	103	I	ADOE	143	I/O	FH
24	I	CSDL	64	O	PALT	104	I	CNT	144	I	FLK2
25	O	RSID	65	I/O	R2BH	105	O	SWR	145	I	VITE
26	O	RBG	66	I/O	RHBL	106	O	SWS	146	I	VIEX
27	O	SCBL	67	I/O	OHBL	107	I	SCLD	147	O	YBL
28	O	RBLK	68	I/O	OHFB	108	I	VISC	148	O	CBL
29	—	GND	69	—	GND	109	O	UD0	149	I	BCAM
30	O	RSYNC	70	O	I8F	110	O	UD1	150	O	ENBL
31	O	RVD	71	I	P8F	111	O	UD2	151	O	CID8
32	O	REOE	72	I/O	I2H	112	O	UD3	152	O	CIDR
33	O	R8F	73	O	INTH	113	O	UD4	153	O	VISB
34	I	EXVR	74	I	TM1	114	O	UD5	154	O	VISR
35	I	SEXT	75	I	TCI	115	O	UD6	155	O	OSID
36	O	BEXT	76	I	FSC4	116	O	UD7	156	O	JUC
37	—	VDD	77	—	VDD	117	—	VDD	157	—	VDD
38	I	TGC	78	—	NC	118	—	NC	158	—	NC
39	—	NC	79	—	NC	119	—	NC	159	—	NC
40	—	NC	80	—	NC	120	—	NC	160	—	NC

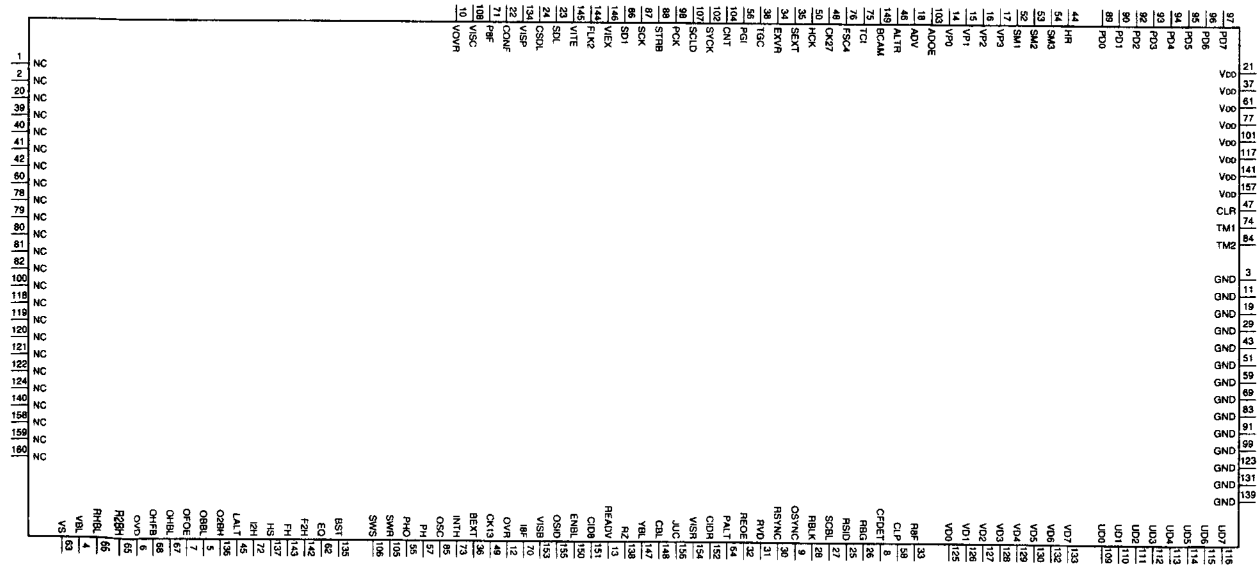

CXD8608R (SONY)

C-MOS DIGITAL ENCODE/DECODE

-TOP VIEW-

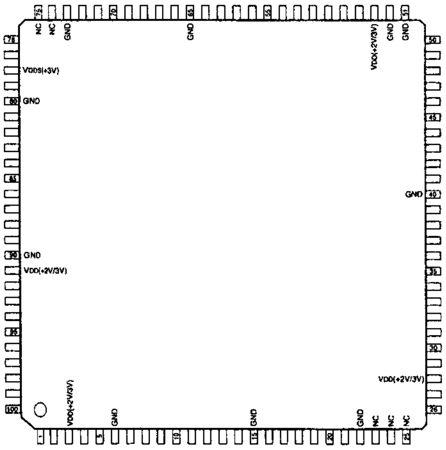

PIN NO.	I/O	SIGNAL	PIN NO.	I/O	SIGNAL	PIN NO.	I/O	SIGNAL
1	I	TMODE	35	I	EQNM1	69	I/O	DDT14
2	I	SD	36	I	EQNM2	70	I/O	DDT15
3	—	VDD(+2V/3V)	37	I	EQNM3	71	O	DOBUP
4	I	RTST	38	I	EQSEL	72	I	DIBUP
5	O	FERR	39	I/O	TBP	73	—	GND
6	—	GND	40	—	GND	74	—	NC
7	I	PH1	41	I/O	TDT0	75	—	NC
8	I	HRED	42	I/O	TDT1	76	I	TRCK
9	I	SRED	43	I/O	TDT2	77	I	CIBUP
10	I	RMTH2	44	I/O	TDT3	78	—	VDDS(+3V)
11	I	RMTH1	45	I/O	TDT4	79	I	TTCK
12	I	RMTH0	46	I/O	TDT5	80	—	GND
13	I	PMTH1	47	I/O	TDT6	81	I/O	VDT7
14	I	PMTH0	48	I/O	TDT7	82	I/O	VDT6
15	—	GND	49	I/O	TDT8	83	I/O	VDT5
16	I	IMA	50	I/O	TDT9	84	I/O	VDT4
17	I	ATH1	51	—	GND	85	I/O	VDT3
18	I	ATH0	52	—	GND	86	I/O	VDT2
19	I	RMOD	53	—	VDD(+2V/3V)	87	I/O	VDT1
20	I	DIG	54	I/O	DDT0	88	I/O	VDT0
21	I	FSTA	55	I/O	DDT1	89	I/O	VBUP
22	—	GND	56	I/O	DDT2	90	—	GND
23	—	NC	57	I/O	DDT3	91	—	VDD(+2V/3V)
24	—	NC	58	I/O	DDT4	92	I	RST
25	—	NC	59	I/O	DDT5	93	I	PS
26	O	RDT	60	I/O	DDT6	94	I	REC
27	I	DORZ	61	I/O	DDT7	95	I	TRST
28	—	VDD(+2V/3V)	62	I/O	DDT8	96	I	TCK
29	I	TDON	63	I/O	DDT9	97	I	TMS
30	I	DRET	64	I/O	DDT10	98	O	TDO
31	I	EACT0	65	—	GND	99	I	TDI
32	I	EACT1	66	I/O	DDT11	100	I	SMODE
33	I	EASEL	67	I/O	DDT12			
34	I	EQNM0	68	I/O	DDT13			

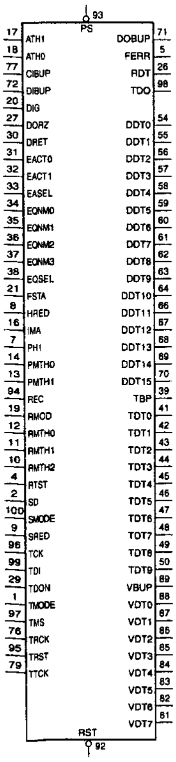

INPUT

ATH1, ATH0	; ACTIVITY THRESHOLD
CIBUP	; PB BUP
DIBUP	; BUP
DIG	; DIGEST MODE
DORZ	; TEST DATA SELECT
DRET	; DCT RETURN
EACT0, EACT1	; EXTERNAL ACTIVITY
EASEL	; EXTERNAL ACTIVITY ENABLE
EQNM0 ± EQNM3	;EXTERNAL Q-NUMBER
EQSEL	; EXTERNAL Q-NUMBER ENABLE
FSTA	; 3-PASS CUT MODE
HRED	; RED DETECT (HD)
IMA	; IMPACT
PH1	; PHASE-1 COMPATIBLE MODE
PMTH0, PMTH1	; PB MOTION THRESHOLD
PS	; POWER SAVE
REC	; REC/PB SELECT (H: REC, L: PB)
RMOD	; ROUND MODE
RMTH0 ± RMTH2	; REC MOTION THRESHOLD
RST	; SYSTEM RESET
RTST	; RAM TEST
SD	; MODE SETTING
SMODE	; FOR TEST
SRED	; RED DETECT (SD)
TCK	; JTAG CLOCK
TDI	; JTAG DATA
TDON	; TEST DATA OUTPUT ON
TMODE	; FOR TEST
TMS	; JTAG MODE SET
TRCK	; CLOCK (18MHz)
TRST	; JTAG RESET
TTCK	; CLOCK (HD: 24MHz, SD: 18MHz)

OUTPUT

DOBUP	; BUP
FERR	; FRAMING ERROR
RDT	; RED DETECT FLAG
TDO	; JTAG DATA

INPUT/OUTPUT

DDT0 ± DDT15	; DATA (D1/SFY SIDE)
TBP	; TEST DATA BUP
TDT0 ± TDT9	; TEST DATA
VBUP	; BUP (V1 SIDE)
VDT0 ± VDT7	; DATA (V1 SIDE)

CY7C185-25VC (CYPRESS)J-LEADED PACKAGE
CY7C185-25VCTEL

C-MOS 8192-WORD × 8-BIT HIGH SPEED STATIC RAM

-TOP VIEW-

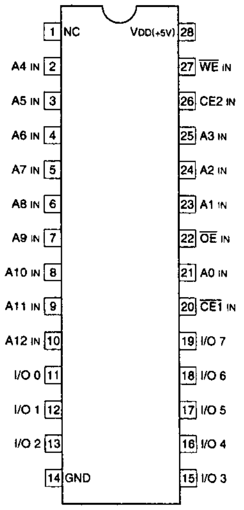

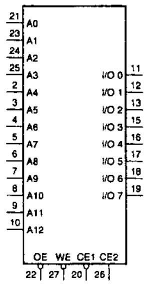

A0 - A12	;	ADDRESS INPUTS
CE1, CE2	;	CHIP ENABLE INPUT
I/O 0 - I/O 7	;	DATA INPUTS / OUTPUTS
OE	;	OUTPUT ENABLE INPUT
WE	;	WRITE ENABLE INPUT

CE1	CE2	OE	WE	MODE	I/O TERMINAL
1	X	X	X	NOT SELECT	HI-Z
X	0	X	X	NOT SELECT	HI-Z
0	1	1	1	OUTPUT DISABLE	HI-Z
0	1	0	1	READ	OUTPUT DATA
0	1	X	0	WRITE	INPUT DATA

0	;	LOW LEVEL
1	;	HIGH LEVEL
X	;	DON'T CARE
HI-Z	;	HIGH IMPEDANCE

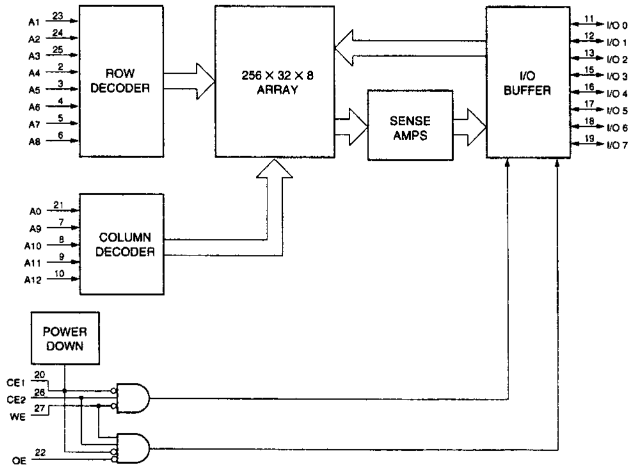

CXD8804Q (SONY)

C-MOS 8-MPU COMMUNICATION CONTROLLER WITH PARALLEL PORT

—TOP VIEW—

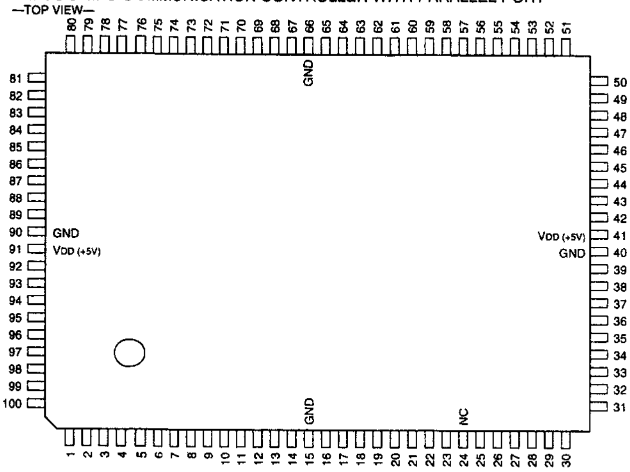

(VDD = +5V)

PIN NO.	I/O	SIGNAL	PIN NO.	I/O	SIGNAL	PIN NO.	I/O	SIGNAL	PIN NO.	I/O	SIGNAL
1	O	OUT26	26	O	V SYNC	51	I	A0 CPU	76	I/O	D0 RAM
2	O	OUT25	27	I	VSNC LEN	52	O	WAIT	77	O	A12 RAM
3	O	OUT24	28	I	HV CLK	53	I	CPU WR	78	O	A11 RAM
4	O	OUT23	29	I	HD	54	I	CPU RD	79	O	A10 RAM
5	O	OUT22	30	I	VD	55	I	MPUIF CS	80	O	A9 RAM
6	O	OUT21	31	I	S PULS IN	56	I	CONT CS	81	O	A8 RAM
7	O	OUT20	32	O	S PULS OUT	57	I/O	D7 CPU	82	O	A7 RAM
8	O	INT	33	I	TES 1	58	I/O	D6 CPU	83	O	A6 RAM
9	I	H SNC	34	I	P ON RST	59	I/O	D5 CPU	84	O	A5 RAM
10	I	S RDY	35	I	SYSTEM CK	60	I/O	D4 CPU	85	O	A4 RAM
11	I	S RESP	36	I	CPU CK	61	I/O	D3 CPU	86	O	A3 RAM
12	O	SCK	37	I	A12 CPU	62	I/O	D2 CPU	87	O	A2 RAM
13	O	SCMD	38	I	A11 CPU	63	I/O	D1 CPU	88	O	A1 RAM
14	O	STRB	39	I	A10 CPU	64	I/O	D0 CPU	89	O	A0 RAM
15	—	GND	40	—	GND	65	O	RAM WR	90	—	GND
16	O	MPUCS7	41	—	VDD	66	—	GND	91	—	VDD
17	O	MPUCS6	42	I	A9 CPU	67	O	RAM OE	92	I	INP 07
18	O	MPUCS5	43	I	A8 CPU	68	O	RAMCE	93	I	INP 06
19	O	MPUCS4	44	I	A7 CPU	69	I/O	D7 RAM	94	I	INP 05
20	O	MPUCS3	45	I	A6 CPU	70	I/O	D6 RAM	95	I	INP 04
21	O	MPUCS2	46	I	A5 CPU	71	I/O	D5 RAM	96	I	INP 03
22	O	MPUCS1	47	I	A4 CPU	72	I/O	D4 RAM	97	I	INP 02
23	O	MPUCS0	48	I	A3 CPU	73	I/O	D3 RAM	98	I	INP 01
24	—	N.C	49	I	A2 CPU	74	I/O	D2 RAM	99	I	INP 00
25	O	H SYNC	50	I	A1 CPU	75	I/O	D1 RAM	100	O	OUT 27

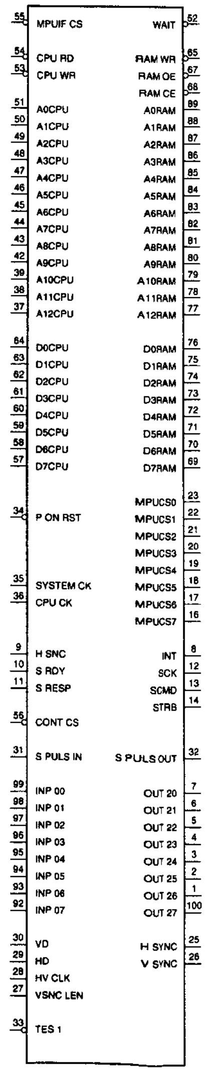

INPUT

A0CPU-A12CPU	;	CPU ADDRESS BUS
CONT CS	;	INTERNAL/PARALLEL PORT
CPU CK	;	CPU CLOCK
CPU RD	;	CPU READ STROBE
CPU WR	;	CPU WRITE STROBE
HD	;	VIDEO HORIZONTAL SYNCHRONIZING PULSE
H SNC	;	SERIAL RECEIVE WAIT
HV CLK	;	VIDEO VERTICAL SAMPLING PULSE (13.5 MHz)
INP 00-07	;	PARALLEL PORT
MPUIF CS	;	EXTERNAL RAM CHIP SELECT
P ON RST	;	POWER IN RESET (L)
S PULS	;	MEDIOCRITY CLOCK PULSE
S RDY	;	SERIAL TRANSMISSION LEADY
S RESP	;	SERIAL RECEIVE DATA
SYSTEM CK	;	SYSTEM CLOCK
TES 1	;	TEST (L)
VD	;	VIDEO VERTICAL SYNCHRONIZING PULSE
VSNC LEN	;	VIDEO VERTICAL SYNCHRONIZING PULSE OUTPUT WIDTH CONTROL

OUTPUT

A0RAM-A12RAM	;	EXTERNAL RAM ADDRESS BUS
H SYNC	;	VIDEO HORIZONTAL SYNCHRONIZING PULSE
INT	;	SERIAL RECEIVE END
MPUCS0-MPUCS7	;	SERIAL CORRESPONDENCE ENABLE
OUT 20-27	;	PARALLEL PORT
RAM CE	;	EXTERNAL RAM CHIP SELECT
RAM OE	;	EXTERNAL RAM OUTPUT ENABLE
RAM WR	;	EXTERNAL RAM WRITE STROBE
SCK	;	SERIAL CORRESPONDENCE CLOCK
SCMD	;	SERIAL TRANSMISSION DATA
S PULS	;	MEDIOCRITY CLOCK PULSE FREQUENCY (1/2-1/27)
STRB	;	SERIAL TRANSMISSION STROBE
V SYNC	;	VIDEO VERTICAL SYNCHRONIZING PULSE
WAIT	;	CPU WAIT

INPUT/OUTPUT

D0CPU-D7CPU	;	CPU DATA BUS
D0RAM-D7RAM	;	EXTERNAL RAM DATA BUS

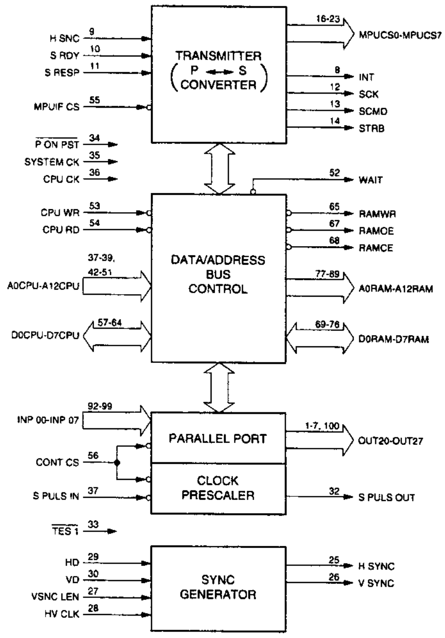

CY7C199-20VC (CYPRESS)J-LEADED PACKAGE

C-MOS 256K (32,768 X 8)-BIT STATIC RAM
-TOP VIEW-

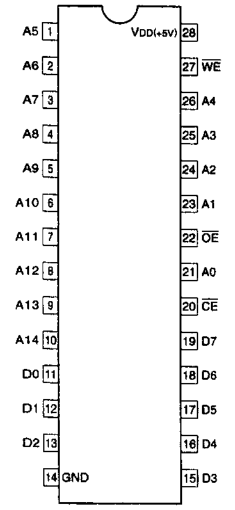

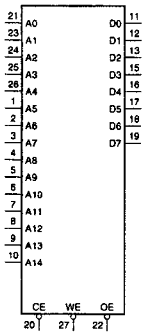

A0 - A14 ; ADDRESS INPUTS
CE ; CHIP ENABLE
D0 - D7 ; DATA INPUTS / OUTPUTS
OE ; OUTPUT ENABLE
WE ; WRITE ENABLE

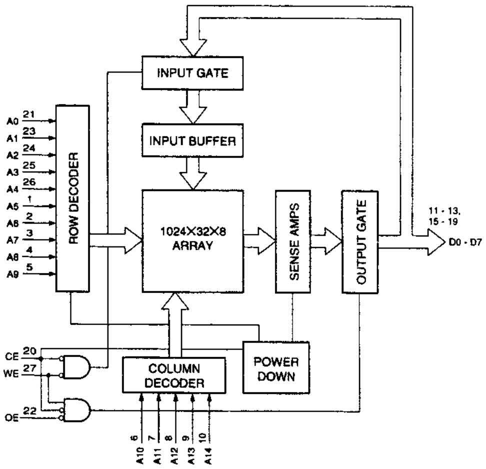

EPM7064LC-JOG
EPM7064LC68-10 (ALTERA)

C-MOS FIELD PROGRAMMABLE LOGIC CIRCUIT
-TOP VIEW-

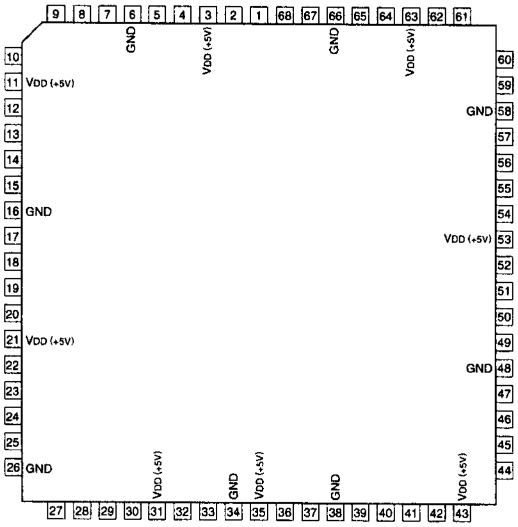

(VDD = +5V)

PIN NO.	I/O	SIGNAL	PIN NO.	I/O	SIGNAL	PIN NO.	I/O	SIGNAL	PIN NO.	I/O	SIGNAL
1	I	GCLRn	18	I/O	I/O	35	—	VDD	52	I/O	I/O
2	I	OE2n	19	I/O	I/O	36	I/O	I/O	53	—	VDD
3	–	VDD	20	I/O	I/O	37	I/O	I/O	54	I/O	I/O
4	I/O	I/O	21	—	VDD	38	—	GND	55	I/O	I/O
5	I/O	I/O	22	I/O	I/O	39	I/O	I/O	56	I/O	I/O
6	—	GND	23	I/O	I/O	40	I/O	I/O	57	I/O	I/O
7	I/O	I/O	24	I/O	I/O	41	I/O	I/O	58	—	GND
8	I/O	I/O	25	I/O	I/O	42	I/O	I/O	59	I/O	I/O
9	I/O	I/O	26	—	GND	43	—	VDD	60	I/O	I/O
10	I/O	I/O	27	I/O	I/O	44	I/O	I/O	61	I/O	I/O
11	—	VDD	28	I/O	I/O	45	I/O	I/O	62	I/O	I/O
12	I/O	I/O	29	I/O	I/O	46	I/O	I/O	63	—	VDD
13	I/O	I/O	30	I/O	I/O	47	I/O	I/O	64	I/O	I/O
14	I/O	I/O	31	—	VDD	48	—	GND	65	I/O	I/O
15	I/O	I/O	32	I/O	I/O	49	I/O	I/O	66	—	GND
16	—	GND	33	I/O	I/O	50	I/O	I/O	67	I	GCLK
17	I/O	I/O	34	—	GND	51	I/O	I/O	68	I	OE1n

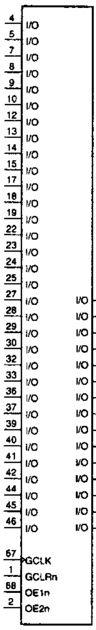

GCLK ; GLOBAL CLOCK
GCLRn ; GLOBAL CLEAR
I/O ; DATA INPUTS/OUTPUTS
OE1n ; OUTPUT ENABLE 1 INPUT
OE2n ; OUTPUT ENABLE 2 INPUT

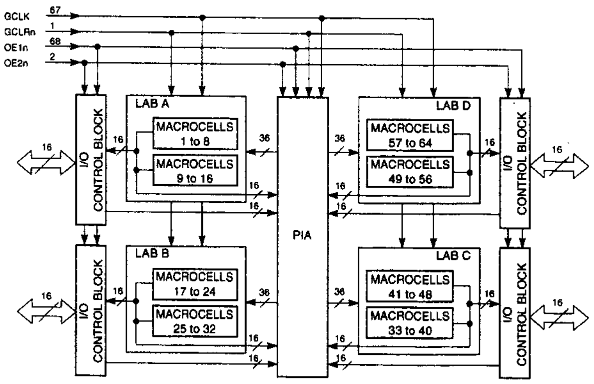

*ABOVE DIAGRAM SHOWS CONDITIONS BEFORE PROGRAMMING.

HD14053BFP (HITACHI)FLAT PACKAGE
MC14053BF (MOTOROLA)FLAT PACKAGE
MC14053BF-T2
MC14053BFEL
TC4053BFS (TOSHIBA)FLAT PACKAGE
TC4053BFS-EL (TOSHIBA)

C-MOS TRIPLE 2-CHANNEL ANALOG MULTIPLEXERS/DEMULTIPLEXERS
— TOP VIEW —

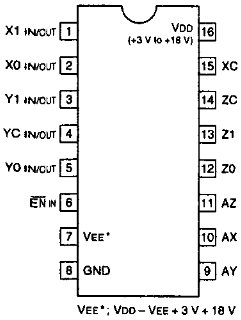

VEE*; VDD – VEE + 3 V + 18 V

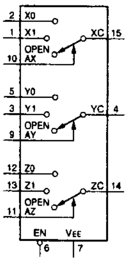

0 ; LOW LEVEL
1 ; HIGH LEVEL
X ; DON'T CARE

CONT. INPUTS		ON CHANNEL
EN	A (X, Y, Z)	
0	0	0
0	1	1
1	X	OPEN

HD6437021C02X (HITACHI)
HD6437021SC02X (HITACHI)

C-MOS 32-BIT MICROPROCESSOR
- TOP VIEW-

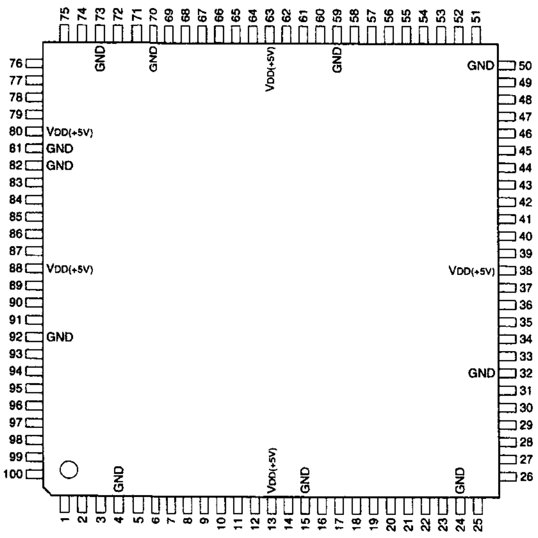

PIN NO.	I/O	SIGNAL	PIN NO.	I/O	SIGNAL	PIN NO.	I/O	SIGNAL
1	I/O	AD0	35	O	A13	69	O	CK
2	I/O	AD1	36	O	A14	70	—	GND
3	I/O	AD2	37	O	A15	71	I	EXTAL
4	—	GND	38	—	VDD	72	I	XTAL
5	I/O	AD3	39	O	A16	73	—	GND
6	I/O	AD4	40	O	A17	74	I	NMI
7	I/O	AD5	41	—	GND	75	O	WDTOVF
8	I/O	AD6	42	O	A18	76	I	RES
9	I/O	AD7	43	O	A19	77	I	MD0
10	I/O	AD8	44	O	A20	78	I	MD1
11	I/O	AD9	45	O	A21	79	I	MD2
12	I/O	AD10	46	O	CS0	80	—	VDD
13	—	VDD	47	O	CS1/CASH	81	—	GND
14	I/O	AD11	48	O	CS2	82	—	GND
15	—	GND	49	O	CS3/CASL	83	I/O	PB0/TP0/TIOCA2
16	I/O	AD12	50	—	GND	84	I/O	PB1/TP1/TIOCB2
17	I/O	AD13	51	I/O	PA0/CS4/TIOCA0	85	I/O	PB2/TP2/TIOCA3
18	I/O	AD14	52	I/O	PA1/CS5/RAS	86	I/O	PB3/TP3/TIOCB3
19	I/O	AD15	53	I/O	PA2/CS6/TIOCB0	87	I/O	PB4/TP4/TIOCA4
20	O	A0 (HBS)	54	I/O	PA3/CS7/WAIT	88	—	VDD
21	O	A1	55	I/O	PA4/WRL/(WR)	89	I/O	PB5/TP5/TIOCB4
22	O	A2	56	I/O	PA5/WRH/(LBS)	90	I/O	PB6/TP6/TOCXA4/TCLKC
23	O	A3	57	I/O	PA6/RD	91	I/O	PB7/TP7/TOCXB4/TCLKD
24	—	GND	58	I/O	PA7/BACK	92	—	GND
25	O	A4	59	—	GND	93	I/O	PB8/TP8/RXD0
26	O	A5	60	I/O	PA8/BREQ	94	I/O	PB9/TP9/TXD0
27	O	A6	61	I/O	PA9/AH/IRQOUT	95	I/O	PB10/TP10/RXD1
28	O	A7	62	I/O	PA10/DPL/TIOCA1	96	I/O	PB11/TP11/TXD1
29	O	A8	63	—	VDD	97	I/O	PB12/TP12/IRQ4/SCK0
30	O	A9	64	I/O	PA11/DPH/TIOCB1	98	I/O	PB13/TP13/IRQ5/SCK1
31	O	A10	65	I/O	PA12/IRQ0/DACK0/TCLKA	99	I/O	PB14/TP14/IRQ6
32	—	GND	66	I/O	PA13/IRQ1/DREQ0/TCLKB	100	I/O	PB15/TP15/IRQ7
33	O	A11	67	I/O	PA14/IRQ2/DACK1			
34	O	A12	68	I/O	PA15/IRQ3/DREQ1			

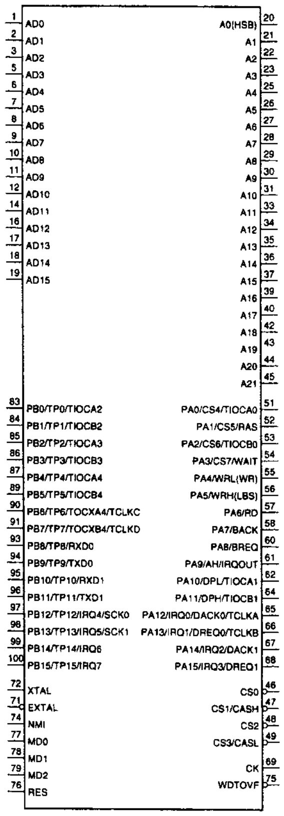

INPUT
- BREQ ; BUS REQUEST
- DREQ0, DREQ1 ; DMA REQUEST
- EXTAL ; CRYSTAL OSCILLATOR AND EXTERNAL CLOCK
- IRQ0 - IRQ7 ; INTERRUPT REQUEST
- MD0 - MD2 ; MODE SELECT
- NMI ; NON-MASKABLE INTERRUPT
- RES ; RESET
- RXD0, RXD1 ; RECEIVE DATA
- TCLKA - TCLKD ; TIMER CLOCK
- WAIT ; WAIT
- XTAL ; EXTERNAL CRYSTAL OSCILLATOR

OUTPUT
- AH ; ADDRESS HOLD
- A0 - A21 ; ADDRESS BUS
- BACK ; BUS REQUEST ACKNOWLEDGE
- CASH ; HIGH COLUMN ADDRESS STROBE
- CASL ; LOW COLUMN ADDRESS STROBE
- CK ; SYSTEM CLOCK
- CS0 - CS7 ; CHIP SELECT
- DACK0, DACK1 ; DMA REQUEST ACKNOWLEDGE
- HBS ; HIGH BYTE STROBE
- LBS ; LOW BYTE STROBE
- RAS ; ROW ADDRESS STROBE
- RD ; READ
- RQOUT ; REQUEST OUTPUT
- TOCXA4 ; OUTPUT COMPARE XA4
- TOCXB4 ; OUTPUT COMPARE XB4
- TP0 - TP15 ; TIMING PATTERN CONTROLLER
- TXD0, TXD1 ; TRANSMIT DATA
- WDTOVF ; WATCH-DOG TIMER OVERFLOW
- WR ; WRITE
- WRH ; HIGH WRITE
- WRL ; LOW WRITE

INPUT/OUTPUT
- AD0 - AD15 ; DATA/ADDRESS BUS
- DPH ; HIGH DATA PARITY
- DPL ; LOW DATA PARITY
- PA0 - PA15 ; I/O PORT A
- PB0 - PB15 ; I/O PORT B
- SCK0, SCK1 ; SERIAL CLOCK
- TIOCA0 - TIOCA4 ; ITU INPUT CAPTURE/OUTPUT COMPARE
- TIOB0 - TIOCB4 ; ITU INPUT CAPTURE/OUTPUT COMPARE

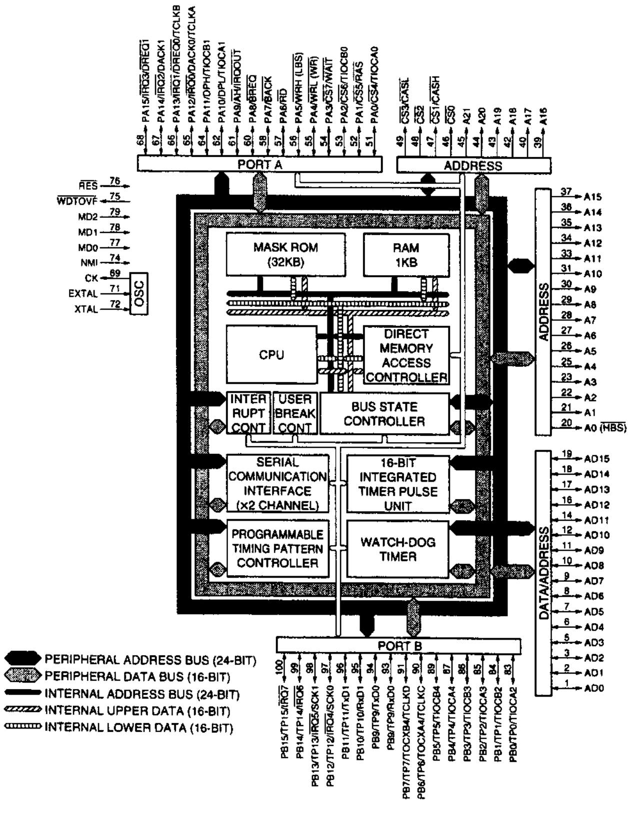

HD6415108RF10 (HITACHI)

C-MOS 16-BIT MICROCOMPUTER UNIT
-TOP VIEW-

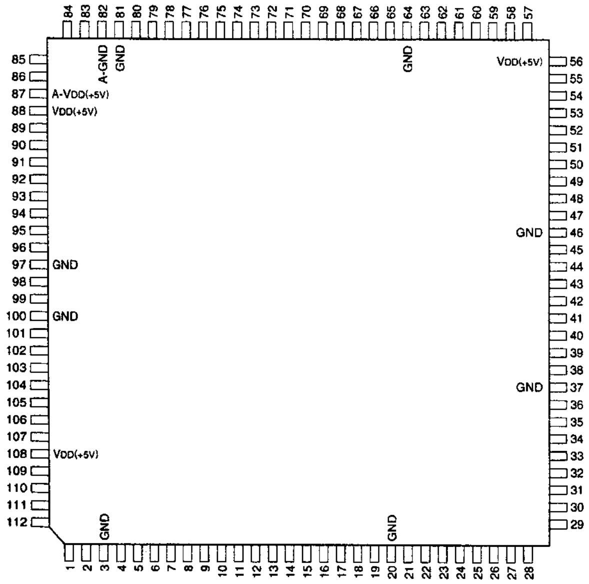

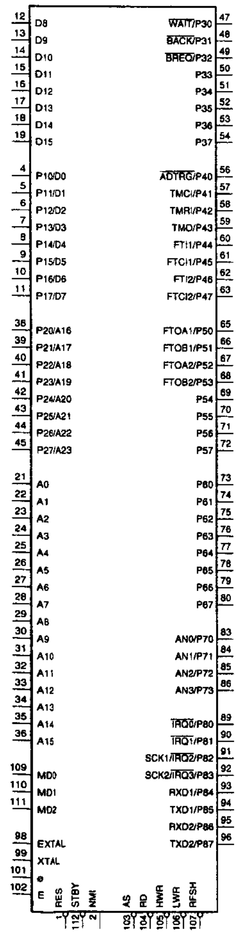

INPUT
- ADTRG ; EXTERNAL TRIGGER
- AN0 - AN3 ; ANALOG
- BREQ ; BUS RIGHT REQUEST
- EXTAL ; CRYSTAL OSCILLATOR
- FTI1, FTI2 ; FREE RUNNING TIMER INPUT CAPTURE (CH1, CH2)
- FTCI1, FTCI2 ; FREE RUNNING TIMER COUNTER CLOCK (CH1, CH2)
- IRQ0 - IRQ3 ; INTERRUPT REQUEST
- MD0 - MD2 ; MODE SET UP
- NMI ; NON-MASKABLE INTERRUPT
- P70 - P73 ; PORT 7
- RXD1, RXD2 ; RECEIVE DATA (CH1, CH2)
- STBY ; STANDBY
- TMCI ; 8-BIT TIMER CLOCK
- TMRI ; 8-BIT TIMER COUNTER RESET
- WAIT ; WAIT
- XTAL ; CRYSTAL OSCILLATOR

OUTPUT
- A0 - A23 ; ADDRESS BUS
- AS ; ADDRESS STROBE
- BACK ; BUS RIGHT REQUEST ACKNOWLEDGE
- E ; ENABLE CLOCK
- FTOA1, FTOA2 ; FREE RUNNING TIMER OUTPUT COMPARE A (CH1, CH2)
- FTOB1, FTOB2 ; FREE RUNNING TIMER OUTPUT COMPARE B (CH1, CH2)
- HWR ; HIGH WRITE
- LWR ; LOW WRITE
- RD ; READ
- RFSH ; REFRESH CYCLE
- TMO ; 8-BIT TIMER
- TXD1, TXD2 ; TRANSMISSION DATA (CH1, CH2)
- ø ; SYSTEM CLOCK

INPUT/OUTPUT
- D0 - D15 ; DATA BUS
- P10 - P17 ; PORT 1
- P20 - P27 ; PORT 2
- P30 - P37 ; PORT 3
- P40 - P47 ; PORT 4
- P50 - P57 ; PORT 5
- P60 - P67 ; PORT 6
- P80 - P87 ; PORT 8
- RES ; RESET
- SCK1, SCK2 ; SERIAL CLOCK (CH1, CH2)

INPUTS			OPERATION MODE	CONTENTS
MD2	MD1	MD0		
0	0	1	MODE 1	EXTENSION MINIMUM MODE (8BIT BUS)
0	1	0	MODE 2	EXTENSION MINIMUM MODE (16BIT BUS)
0	1	1	MODE 3	EXTENSION MAXIMUM MODE (8BIT BUS)
1	0	0	MODE 4	EXTENSION MAXIMUM MODE (16BIT BUS)
1	0	1	MODE 5	SINGLE CHIP MODE
1	1	0	MODE 6	
1	1	1	MODE 7	

PIN NO.	EXPANSION MINIMUM MODE				EXPANSION MAXIMUM MODE			
	MODE 1		MODE 2		MODE 3		MODE 4	
	I/O	SIGNAL	I/O	SIGNAL	I/O	SIGNAL	I/O	SIGNAL
1	I/O	RES	I/O	RES	I/O	RES	I/O	RES
2	I	NMI	I	NMI	I	NMI	I	NMI
3	—	GND	—	GND	—	GND	—	GND
4	I/O	P10	I/O	D0	I/O	P10	I/O	D0
5	I/O	P11	I/O	D1	I/O	P11	I/O	D1
6	I/O	P12	I/O	D2	I/O	P12	I/O	D2
7	I/O	P13	I/O	D3	I/O	P13	I/O	D3
8	I/O	P14	I/O	D4	I/O	P14	I/O	D4
9	I/O	P15	I/O	D5	I/O	P15	I/O	D5
10	I/O	P16	I/O	D6	I/O	P16	I/O	D6
11	I/O	P17	I/O	D7	I/O	P17	I/O	D7
12	I/O	D8	I/O	D8	I/O	D8	I/O	D8
13	I/O	D9	I/O	D9	I/O	D9	I/O	D9
14	I/O	D10	I/O	D10	I/O	D10	I/O	D10
15	I/O	D11	I/O	D11	I/O	D11	I/O	D11
16	I/O	D12	I/O	D12	I/O	D12	I/O	D12
17	I/O	D13	I/O	D13	I/O	D13	I/O	D13
18	I/O	D14	I/O	D14	I/O	D14	I/O	D14
19	I/O	D15	I/O	D15	I/O	D15	I/O	D15
20	—	GND	—	GND	—	GND	—	GND
21	O	A0	O	A0	O	A0	O	A0
22	O	A1	O	A1	O	A1	O	A1
23	O	A2	O	A2	O	A2	O	A2
24	O	A3	O	A3	O	A3	O	A3
25	O	A4	O	A4	O	A4	O	A4
26	O	A5	O	A5	O	A5	O	A5
27	O	A6	O	A6	O	A6	O	A6
28	O	A7	O	A7	O	A7	O	A7
29	O	A8	O	A8	O	A8	O	A8
30	O	A9	O	A9	O	A9	O	A9
31	O	A10	O	A10	O	A10	O	A10
32	O	A11	O	A11	O	A11	O	A11
33	O	A12	O	A12	O	A12	O	A12
34	O	A13	O	A13	O	A13	O	A13
35	O	A14	O	A14	O	A14	O	A14
36	O	A15	O	A15	O	A15	O	A15
37	—	GND	—	GND	—	GND	—	GND
38	I/O	P20	I/O	P20	O	A16	O	P20
39	I/O	P21	I/O	P21	O	A17	O	P21
40	I/O	P22	I/O	P22	O	A18	O	P22

(VDD = +5V)

PIN NO.	EXPANSION MINIMUM MODE				EXPANSION MAXIMUM MODE			
	MODE 1		MODE 2		MODE 3		MODE 4	
	I/O	SIGNAL	I/O	SIGNAL	I/O	SIGNAL	I/O	SIGNAL
41	I/O	P23	I/O	P23	O	A19	O	A19
42	I/O	P24	I/O	P24	O	A20	O	A20
43	I/O	P25	I/O	P25	O	A21	O	A21
44	I/O	P26	I/O	P26	O	A22	O	A22
45	I/O	P27	I/O	P27	O	A23	O	A23
46	—	GND	—	GND	—	GND	—	GND
47	I/O	P30 / WAIT	I/O	P30 / WAIT	I/O	P30 / WAIT	I/O	P30 / WAIT
48	I/O	P31 / BACK	I/O	P31 / BACK	I/O	P31 / BACK	I/O	P31 / BACK
49	I/O	P32 / BREQ	I/O	P32 / BREQ	I/O	P32 / BREQ	I/O	P32 / BREQ
50	I/O	P33	I/O	P33	I/O	P33	I/O	P33
51	I/O	P34	I/O	P34	I/O	P34	I/O	P34
52	I/O	P35	I/O	P35	I/O	P35	I/O	P35
53	I/O	P36	I/O	P36	I/O	P36	I/O	P36
54	I/O	P37	I/O	P37	I/O	P37	I/O	P37
55	—	VDD	—	VDD	—	VDD	—	VDD
56	I/O	P40 / ADTRG	I/O	P40 / ADTRG	I/O	P40 / ADTRG	I/O	P40 / ADTRG
57	I/O	P41 / TMCI	I/O	P41 / TMCI	I/O	P41 / TMCI	I/O	P41 / TMCI
58	I/O	P42 / TMRI	I/O	P42 / TMRI	I/O	P42 / TMRI	I/O	P42 / TMRI
59	I/O	P43 / TMO	I/O	P43 / TMO	I/O	P43 / TMO	I/O	P43 / TMO
60	I/O	P44 / FTI1	I/O	P44 / FTI1	I/O	P44 / FTI1	I/O	P44 / FTI1
61	I/O	P45 / FTCI1	I/O	P45 / FTCI1	I/O	P45 / FTCI1	I/O	P45 / FTCI1
62	I/O	P46 / FTI2	I/O	P46 / FTI2	I/O	P46 / FTI2	I/O	P46 / FTI2
63	I/O	P47 / FTCI2	I/O	P47 / FTCI2	I/O	P47 / FTCI2	I/O	P47 / FTCI2
64	—	GND	—	GND	—	GND	—	GND
65	I/O	P50 / FTOA1	I/O	P50 / FTOA1	I/O	P50 / FTOA1	I/O	P50 / FTOA1
66	I/O	P51 / FTOB1	I/O	P51 / FTOB1	I/O	P51 / FTOB1	I/O	P51 / FTOB1
67	I/O	P52 / FTOA2	I/O	P52 / FTOA2	I/O	P52 / FTOA2	I/O	P52 / FTOA2
68	I/O	P53 / FTOB2	I/O	P53 / FTOB2	I/O	P53 / FTOB2	I/O	P53 / FTOB2
69	I/O	P54	I/O	P54	I/O	P54	I/O	P54
70	I/O	P55	I/O	P55	I/O	P55	I/O	P55
71	I/O	P56	I/O	P56	I/O	P56	I/O	P56
72	I/O	P57	I/O	P57	I/O	P57	I/O	P57
73	I/O	P60	I/O	P60	I/O	P60	I/O	P60
74	I/O	P61	I/O	P61	I/O	P61	I/O	P61
75	I/O	P62	I/O	P62	I/O	P62	I/O	P62
76	I/O	P63	I/O	P63	I/O	P63	I/O	P63
77	I/O	P64	I/O	P64	I/O	P64	I/O	P64
78	I/O	P65	I/O	P65	I/O	P65	I/O	P65
79	I/O	P66	I/O	P66	I/O	P66	I/O	P66
80	I/O	P67	I/O	P67	I/O	P67	I/O	P67

(VDD = +5V)

PIN NO.	EXPANSION MINIMUM MODE				EXPANSION MAXIMUM MODE			
	MODE 1		MODE 2		MODE 3		MODE 4	
	I/O	SIGNAL	I/O	SIGNAL	I/O	SIGNAL	I/O	SIGNAL
81	—	GND	—	GND	—	GND	—	GND
82	—	A-GND	—	A-GND	—	A-GND	—	A-GND
83	I	P70 / AN0	I	P70 / AN0	I	P70 / AN0	I	P70 / AN0
84	I	P71 / AN1	I	P71 / AN1	I	P71 / AN1	I	P71 / AN1
85	I	P72 / AN2	I	P72 / AN2	I	P72 / AN2	I	P72 / AN2
86	I	P73 / AN3	I	P73 / AN3	I	P73 / AN3	I	P73 / AN3
87	—	A-VDD	—	A-VDD	—	A-VDD	—	A-VDD
88	—	VDD	—	VDD	—	VDD	—	VDD
89	I/O	P80 / $\overline{IRQ0}$	I/O	P80 / $\overline{IRQ0}$	I/O	P80 / $\overline{IRQ0}$	I/O	P80 / $\overline{IRQ0}$
90	I/O	P81 / $\overline{IRQ1}$	I/O	P81 / $\overline{IRQ1}$	I/O	P81 / $\overline{IRQ1}$	I/O	P81 / $\overline{IRQ1}$
91	I/O	P82 / $\overline{IRQ2}$ / SCK1	I/O	P82 / $\overline{IRQ2}$ / SCK1	I/O	P82 / $\overline{IRQ2}$ / SCK1	I/O	P82 / $\overline{IRQ2}$ / SCK1
92	I/O	P83 / $\overline{IRQ3}$ / SCK2	I/O	P83 / $\overline{IRQ3}$ / SCK2	I/O	P83 / $\overline{IRQ3}$ / SCK2	I/O	P83 / $\overline{IRQ3}$ / SCK2
93	I/O	P84 / RXD1	I/O	P84 / RXD1	I/O	P84 / RXD1	I/O	P84 / RXD1
94	I/O	P85 / TXD1	I/O	P85 / TXD1	I/O	P85 / TXD1	I/O	P85 / TXD1
95	I/O	P86 / RXD2	I/O	P86 / RXD2	I/O	P86 / RXD2	I/O	P86 / RXD2
96	I/O	P87 / TXD2	I/O	P87 / TXD2	I/O	P87 / TXD2	I/O	P87 / TXD2
97	—	GND	—	GND	—	GND	—	GND
98	I	EXTAL	I	EXTAL	I	EXTAL	I	EXTAL
99	I	XTAL	I	XTAL	I	XTAL	I	XTAL
100	—	GND	—	GND	—	GND	—	GND
101	O	ø	O	ø	O	ø	O	ø
102	O	E	O	E	O	E	O	E
103	O	$\overline{AS}$	O	$\overline{AS}$	O	$\overline{AS}$	O	$\overline{AS}$
104	O	$\overline{RD}$	O	$\overline{RD}$	O	$\overline{RD}$	O	$\overline{RD}$
105	O	$\overline{HWR}$	O	$\overline{HWR}$	O	$\overline{HWR}$	O	$\overline{HWR}$
106	O	$\overline{LWR}$	O	$\overline{LWR}$	O	$\overline{LWR}$	O	$\overline{LWR}$
107	O	$\overline{RFSH}$	O	$\overline{RFSH}$	O	$\overline{RFSH}$	O	$\overline{RFSH}$
108	—	VDD	—	VDD	—	VDD	—	VDD
109	I	MD0	I	MD0	I	MD0	I	MD0
110	I	MD1	I	MD1	I	MD1	I	MD1
111	I	MD2	I	MD2	I	MD2	I	MD2
112	I	$\overline{STBY}$	I	$\overline{STBY}$	I	$\overline{STBY}$	I	$\overline{STBY}$

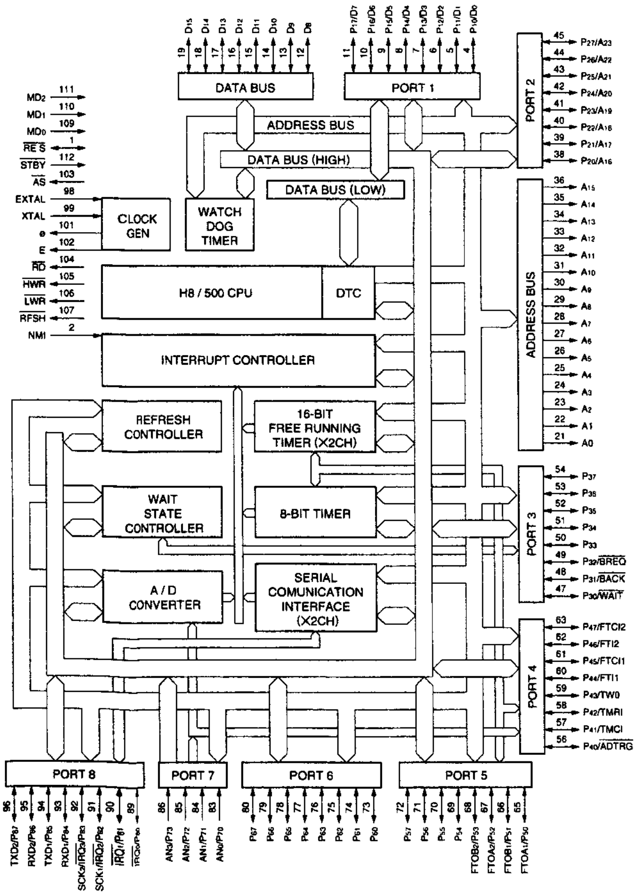

HM62V256LT8Z (HITACHI)

C-MOS SRAM
-TOP VIEW-

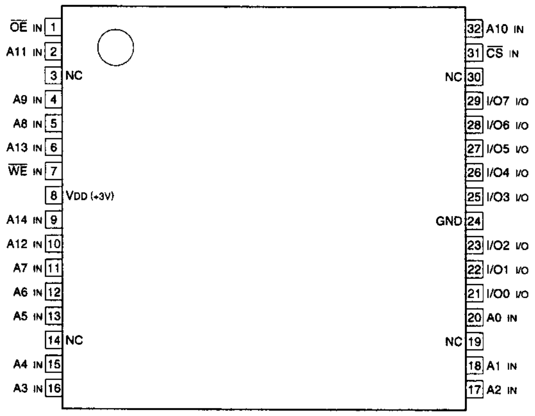

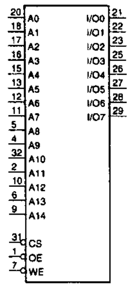

A0-A14 ; ADDRESS INPUTS
$\overline{CS}$; CHIP SELECT INPUT
I/O0-I/O7 ; DATA INPUTS/OUTPUTS
$\overline{OE}$; OUTPUT ENABLE INPUT
$\overline{WE}$; WRITE ENABLE INPUT

$\overline{CS}$	$\overline{OE}$	$\overline{WE}$	MODE	I/O PIN
1	X	X	NO SELECTION	HI-Z
0	1	1	OUTPUT DISABLE	HI-Z
0	0	1	READ	DOUT
0	1	0	WRITE	DIN
0	0	0	WRITE	DIN

0 ; LOW LEVEL
1 ; HIGH LEVEL
X ; DON'T CARE
HI-Z; HIGH IMPEDANCE

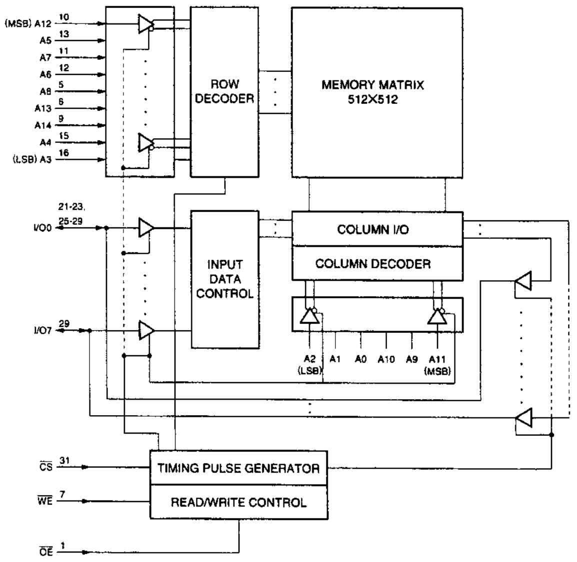

IDT6116SA25S0 (INTEGRATED DEVICE TECHNOLOGY)
IDT6116SA25SO (IDT)FLAT PACKAGE
IDT6116SA25SO-T

C-MOS 16K (2048 X 8)-BIT STATIC RAM
-TOP VIEW-

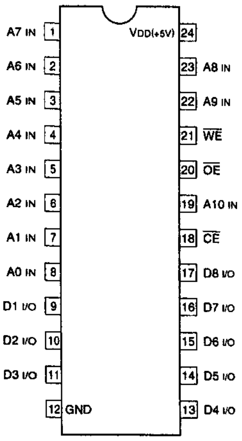

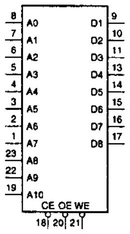

A0 - A10 ; ADDRESS INPUTS
CE ; CHIP ENABLE INPUT
D1 - D8 ; DATA INPUTS / OUTPUTS
OE ; OUTPUT ENABLE INPUT
WE ; WRITE ENABLE INPUT

FUNCTION TABLE

CONTROL INPUTS			MODE	D1 - D8
CE	OE	WE		
1	X	X	STANDBY	HI-Z
0	1	1	DISABLE OUTPUT	HI-Z
0	0	1	FEAD	OUTPUT
0	X	0	WRITE	INPUT

0 ; LOW LEVEL
1 ; HIGH LEVEL
X ; DON'T CARE
HI-Z ; HIGH IMPEDANCE

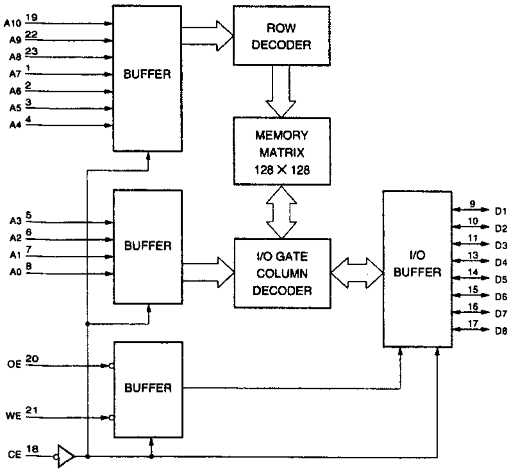

IDT7164S20Y (IDT)SOP-J BEND
IDT7164S20Y-TL (IDT)SOP-J BEND

C-MOS 64K (8K X 8)-BIT STATIC RAM
-TOP VIEW-

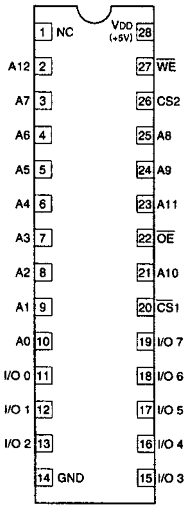

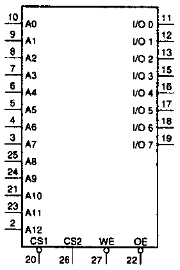

INPUT
A0 - A12 ; ADDRESS
CS1, CS2 ; CHIP SELECT 1, 2
OE ; OUTPUT ENABLE
WE ; WRITE ENABLE

INPUT/OUTPUT
I/O 0-I/O 7 ; DATA INPUTS/OUTPUTS

WE	CS1	CS2	OE	I/O	FUNCTION
X	1	X	X	HI-Z	DESELECTED-STANDBY (ISB)
X	X	0	X	HI-Z	DESELECTED-STANDBY (ISB)
X	VHC	VHC OR VLC	X	HI-Z	DESELECTED-STANDBY (ISB1)
X	X	VLC	X	HI-Z	DESELECTED-STANDBY (ISB1)
1	0	1	1	HI-Z	OUTPUT DISABLED
1	0	1	0	DATA OUT	READ DATA
0	0	1	X	DATA IN	WRITE DATA

0 ; LOW LEVEL
1 ; HIGH LEVEL
X ; DON'T CARE
HI-Z ; HIGH IMPEDANCE
VLC ; 0.2 V
VHC ; -0.2 V

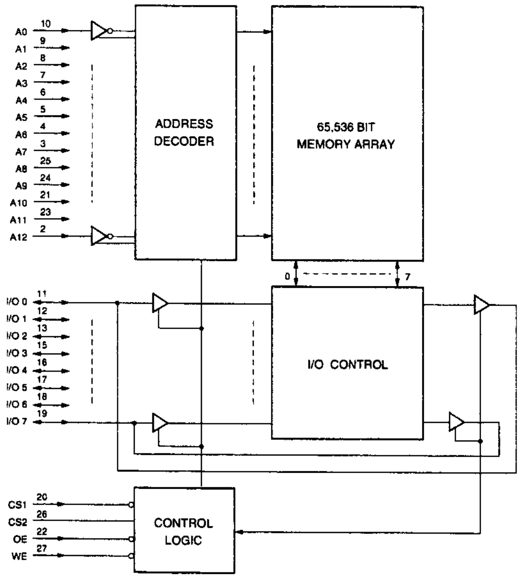

HEDR-8000 (YHP)

PHOTO POSITION SENSOR
- TOP VIEW-

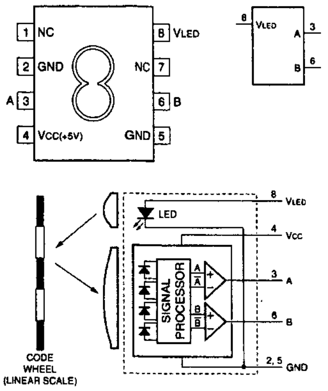

LH64256BK-60 (OKI)
NN514256J-70-T

C-MOS 256 × 4 BITS DYNAMIC RAM
- TOP VIEW-

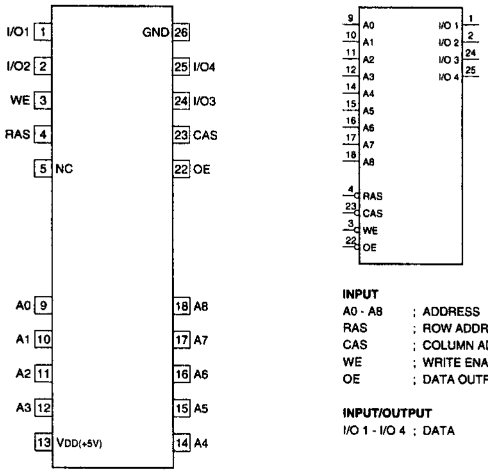

INPUT
A0 - A8 ; ADDRESS
RAS ; ROW ADDRESS STROBE
CAS ; COLUMN ADDRESS STROBE
WE ; WRITE ENABLE (H : READ, L : WRITE)
OE ; DATA OUTPUT ENABLE

INPUT/OUTPUT
I/O 1 - I/O 4 ; DATA

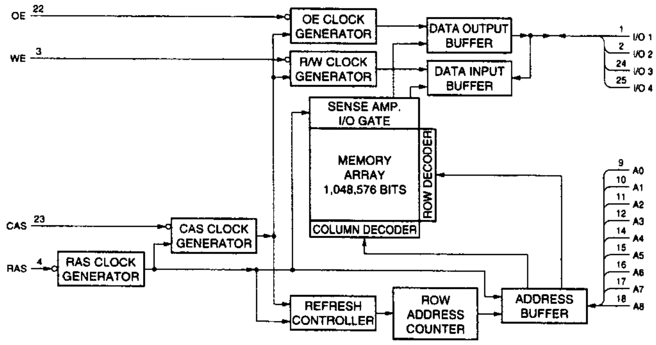

L78M09T-TL (SANYO)+9 V

POSITIVE VOLTAGE REGULATOR

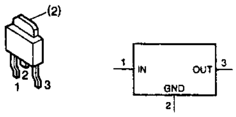

L79M05T-FA (SANYO)−5 V
L79M05T-FA-TL
L79M09T-TL (SANYO)−9 V

NEGATIVE VOLTAGE REGULATOR

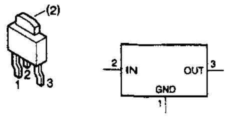

LM1881M (NS)FLAT PACKAGE
LM1881MX

VIDEO SYNC SEPARATOR
—TOP VIEW—

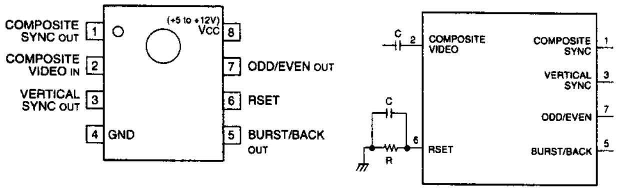

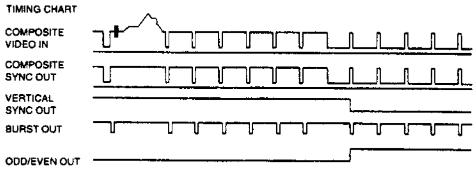

LB1857M-TE-L (SANYO)FLAT PACKAGE

3-PHASE BRUSHLESS MOTOR DRIVER
-TOP VIEW-

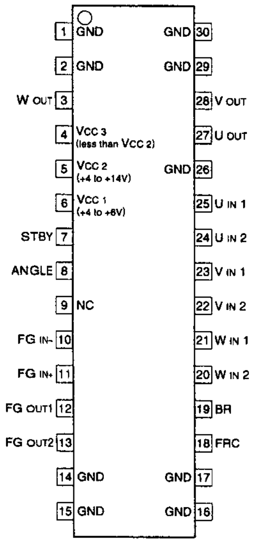

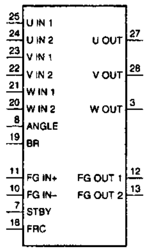

INPUTS

ANGLE	; INPUT/OUTPUT GAIN CONTROL
BR	; MOTOR CONTROL (L:DRIVE/H:STOP)
FG +/-	; FG SIGNAL
FRC	; MOTOR FORWARD/REVERSE CONTROL(L:FWD/H:REV)
STBY	; STANDBY (L:STANDBY)
U 1/2, V 1/2, W 1/2	; CONTROL

OUTPUT

FG 1/2	; FG AMP
U, V, W	; OUTPUTS

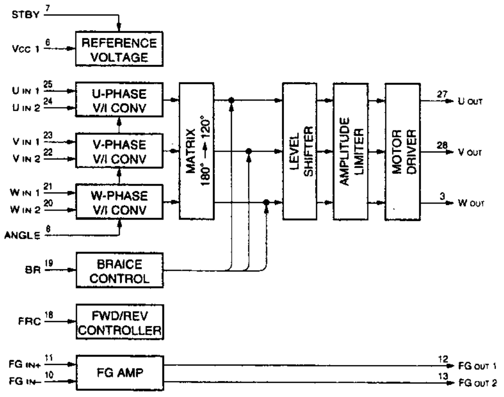

LM311PS (TI)FLAT PACKAGE
LM311PS-E05

VOLTAGE COMPARATOR WITH STROBE
—TOP VIEW—

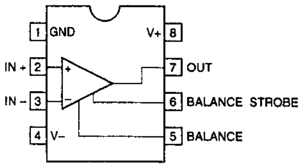

M27C1001-10F1 (SGS)
M27C1001-10F1-(F) (SGS-THOM)
M27C1001-70F1 (SGS)
M27C1001-70F1(F) (SGS-THOM)
M27C1001-70F1-(F)

C-MOS 1M (128k X 8)-BIT UV EPROM
-TOP VIEW-

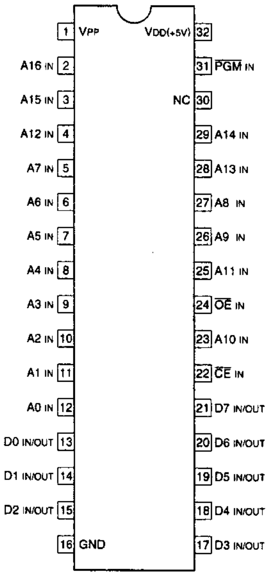

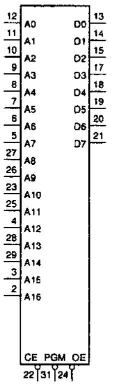

A0 - A16	; ADDRESS INPUTS
CE	; CHIP ENABLE INPUT
OE	; OUTPUT ENABLE
PGM	; PROGRAM INPUT
D0 - D7	; DATA INPUTS/OUTPUTS
VPP	; PROGRAMMING VOLTAGE INPUT

1	; HIGH LEVEL
0	; LOW LEVEL
X	; DON'T CARE
VH	; 12.0V ± 0.5V
HI-Z	; HIGH IMPEDANCE

MODE	CE	OE	A9	PGM	VPP	OUTPUT
READ	0	0	X	X	X	DOUT
OUTPUT DISABLE	0	1	X	X	X	HI-Z
STANDBY	1	X	X	X	X	HI-Z
PROGRAM	0	1	X	0	VPP	DIN
PROGRAM VERIFY	0	0	X	1	VPP	DOUT
PROGRAM INHIBIT	1	X	X	X	VPP	HI-Z
ELECTRONIC SIGNATURE	0	0	VH	1	VPP	CODE

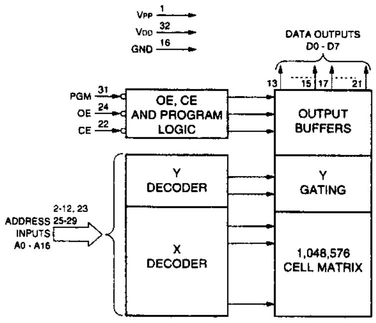

M51958AFP600D (MITSUBISHI)FLAT PACKAGE

VOLTAGE DETECT DELAY
— TOP VIEW —

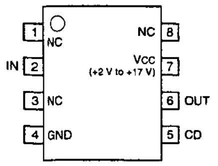

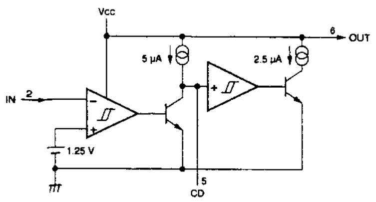

M48Z58Y-70MH1TR (SGS THOMSON)

C-MOS 64 K (8 K × 8)-BIT SRAM
—TOP VIEW—

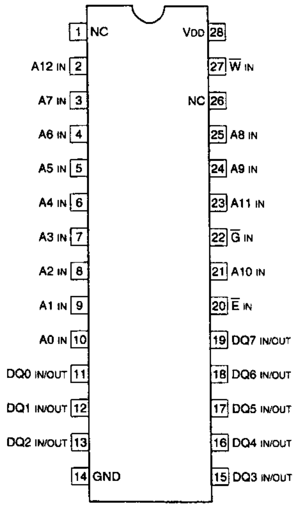

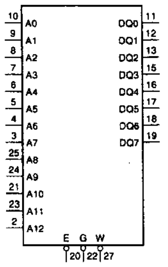

A0 - A12 : ADDRESS INPUTS
DQ0 - DQ7 : DATA INPUTS/OUTPUTS
E : CHIP ENABLE
G : OUTPUT ENABLE
W : WRITE ENABLE

MODE	E	G	W	DQ0 - DQ7	POWER
DESELECT	1	×	×	HI-Z	STANDBY
WRITE	0	×	0	D IN	ACTIVE
READ	0	0	1	D OUT	ACTIVE
READ	0	1	1	HI-Z	ACTIVE
DESELECT	×	×	×	HI-Z	CMOS STANDBY
DESELECT	×	×	×	HI-Z	BATTERY BACK-UP MODE

1 : HIGH LEVEL
0 : LOW LEVEL
× : DON'T CARE
HI-Z : HIGH IMPEDANCE

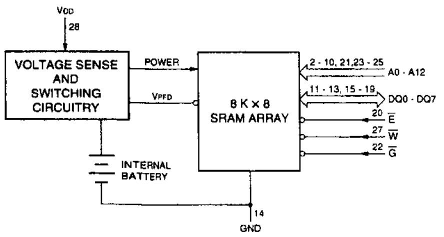

M54523FP (MITSUBISHI)
M54523FP-TP

BIPOLAR TRANSISTOR ARRAY WITH OPEN COLLECTOR
-TOP VIEW-

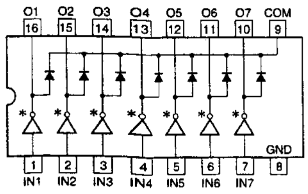

COM : COMMON

M54532P (MITSUBISHI)

DARLINGTON TRANSISTOR ARRAY WITH CLAMP DIODE
-TOP VIEW-

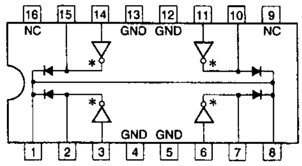

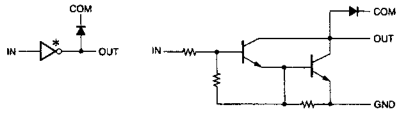

M62353GP (MITSUBISHI)
M62353GP-E2

C-MOS 8-BIT × 8 CHANNEL D/A CONVERTER
- TOP VIEW-

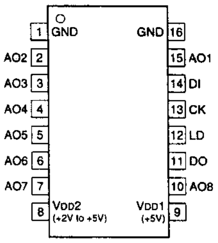

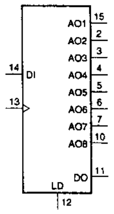

AO1 - AO8 ; 8-BIT D/A OUTPUTS
CK ; CLOCK INPUT
DI ; SERIAL DATA INPUT
DO ; DATA OUTPUT
LD ; DATA LOAD CONTROL INPUT (H : LOAD)

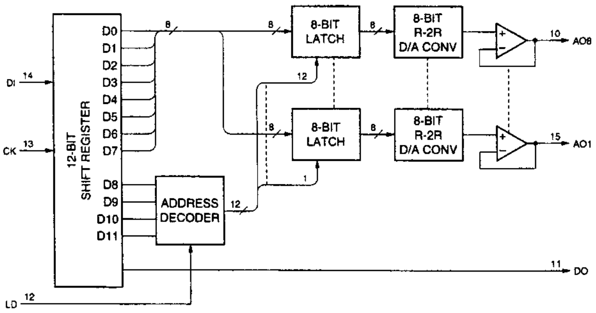

M66004M6FP200D (MITSUBISHI)

C-MOS 16-DIGIT 5 × 7 SEGMENTS FLUORESCENT DISPLAY CONTROLLER
- TOP VIEW-

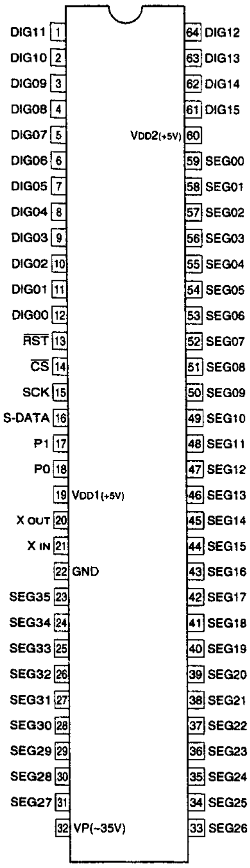

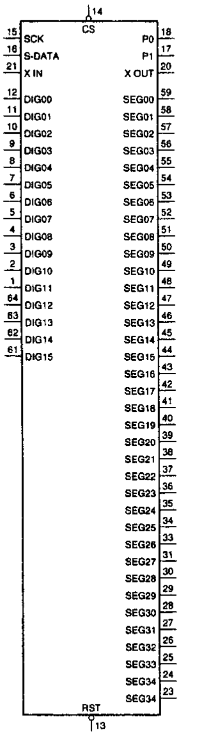

INPUT

CS	; CHIP SELECT
RST	; SYSTEM RESET
SCK	; SHIFT CLOCK
S-DATA	; SERIAL DATA
X IN	; CLOCK INPUT

OUTPUT

X OUT	; CLOCK OUTPUT
DIG00 - DIG15	; DIGIT OUTPUTS
SEG00 - SEG35	; SEGMENT OUTPUTS
P0, P1	; OUTPUT PORTS

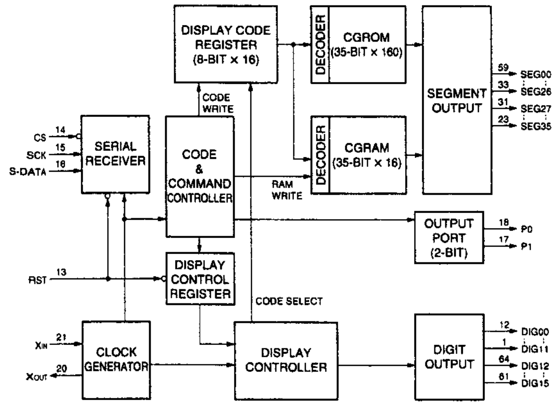

MB88346BPFV (FUJITSU)FLAT PACKAGE(SMALL)
MB88346BPFV-EF

C-MOS 8-BIT D/A CONVERTER
-TOP VIEW-

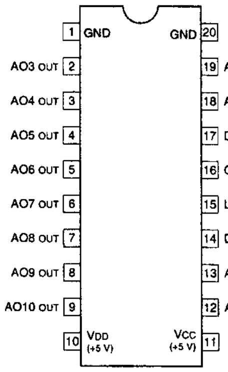

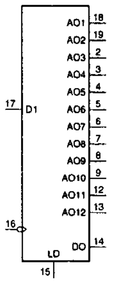

AO1 - AO12	; 8-BIT D/A OUTPUTS
CK	; CLOCK INPUT
DI	; SERIAL DATA INPUT
DO	; DATA OUTPUT
LD	; DATA LOAD CONTROL INPUT (H ; LOAD)

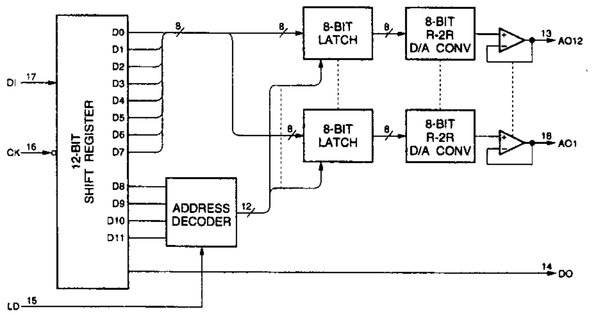

MC14051BF (MOTOROLA)FLAT PACKAGE
MC14051BF-T2

C-MOS 8-CHANNEL ANALOG MULTIPLEXER/DEMULTIPLEXER
-TOP VIEW-

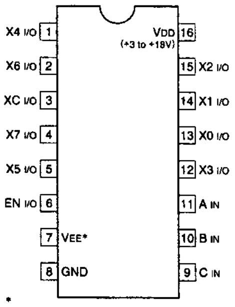

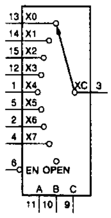

CONTROL INPUTS				SELECTED CHANNEL
EN	SELECT			
	C	B	A	
0	0	0	0	X0
0	0	0	1	X1
0	0	1	0	X2
0	0	1	1	X3
0	1	0	0	X4
0	1	0	1	X5
0	1	1	0	X6
0	1	1	1	X7
1	X	X	X	OPEN

0 ; LOW LEVEL
1 ; HIGH LEVEL
X ; DON'T CARE

X0 to X7	; ANALOG INPUTS/OUTPUTS
XC	; COMMON INPUT/OUTPUT
A,B,C	; CHANNEL SELECT INPUT
EN	; ENABLE INPUT

* VEE ; VDD-VEE=+3 to +18V

MC14052BF (MOTOROLA)FLAT PACKAGE
MC14052BFEL

C-MOS DUAL 4-CHANNEL ANALOG MULTIPLEXERS / DEMULTIPLEXERS
-TOP VIEW-

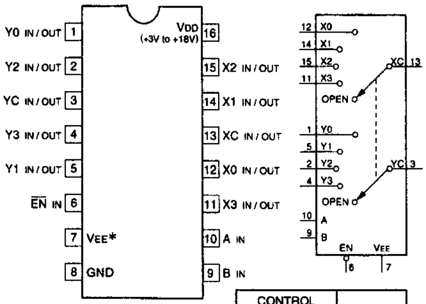

VEE*: VDD – VEE = +3V to +18V

0 : LOW LEVEL
1 : HIGH LEVEL
X : DON'T CARE

CONTROL INPUTS			"ON" CHANNEL
EN	B	A	
0	0	0	0
0	0	1	1
0	1	0	2
0	1	1	3
1	X	X	OPEN

NJM2903M (JRC)FLAT PACKAGE
NJM2903M-TE2

DUAL VOLTAGE COMPARATORS
—TOP VIEW—

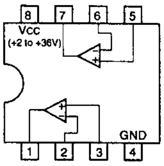

NJM360M (JRC)FLAT PACKAGE
NJM360M-T2

HIGH SPEED VOLTAGE COMPARATOR
—TOP VIEW—

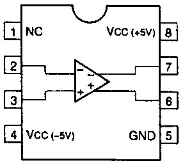

MC14576CFEL (MOTOROLA)FLAT PACKAGE

C-MOS DUAL VIDEO AMPLIFIERS
—TOP VIEW—

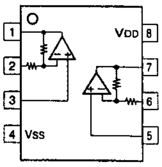

*VDD + | VSS | = +5 to +12V

NJM062M (JRC)
NJM062M-TE2
NJM4556AM-A-TE2 (JRC)
NJM4558V-TE2 (JRC)FLAT PACKAGE(SMALL)
NJM4560M (JRC)FLAT PACKAGE
NJM4560M-TE2
NJM5532M (JRC)FLAT PACKAGE
NJM5532M(TE2) (JRC)FLAT PACKAGE
TL062CPW (TI)FLAT PACKAGE
TL062CPW-E05
UPC4558G2 (NEC)FLAT PACKAGE
UPC4570G2 (NEC)FLAT PACKAGE
UPC4570G2-E2

DUAL OPERATIONAL AMPLIFIERS
(DUAL-SUPPLY TYPE)
-TOP VIEW-

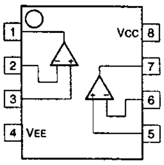

TYPE	Vcc	VEE
062/072/082/4556A/ M5218/BA15218/ 33178/34182 TYPES	+2 to +16V	-2 to -16V
4580 TYPE	+2 to +18V	-2 to -18V
5532 TYPE	+3 to +20V	-3 to -20V
CXA1297 TYPE	+5 to +12V	-5 to -12V
M5219/M5220 TYPES	+5 to +22.5V	-5 to -22.5V
MC33077DR2	+2.5 to +18V	-2.5 to -18V
NJM2100 TYPE	+1 to +3.5V	-1 to -3.5V
OP-297 TYPE	+2 to +20V	-2 to -20V
OTHERS	+5 to +16V	-5 to -16V

MC34051MEL (MOTOROLA)

RS-422 DRIVER / RECEIVER
-TOP VIEW-

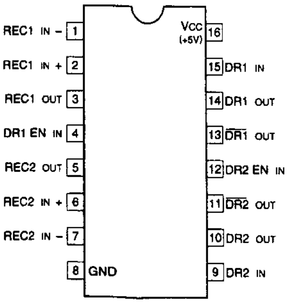

DR EN	MODE
0	DISABLE
1	ENABLE

0 : LOW LEVEL
1 : HIGH LEVEL

DR ; DRIVER
DR EN ; DRIVER ENABLE
REC ; RECEIVER

DRIVER CIRCUIT

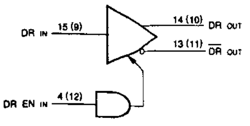

RECEIVER CIRCUIT

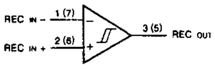

MC68HC705C8AFU (MOTOROLA)

C-MOS MICROCONTROLLER UNIT
- TOP VIEW-

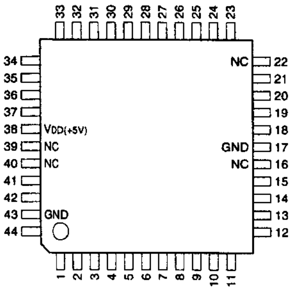

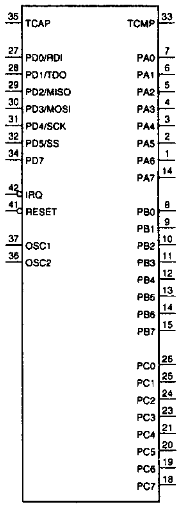

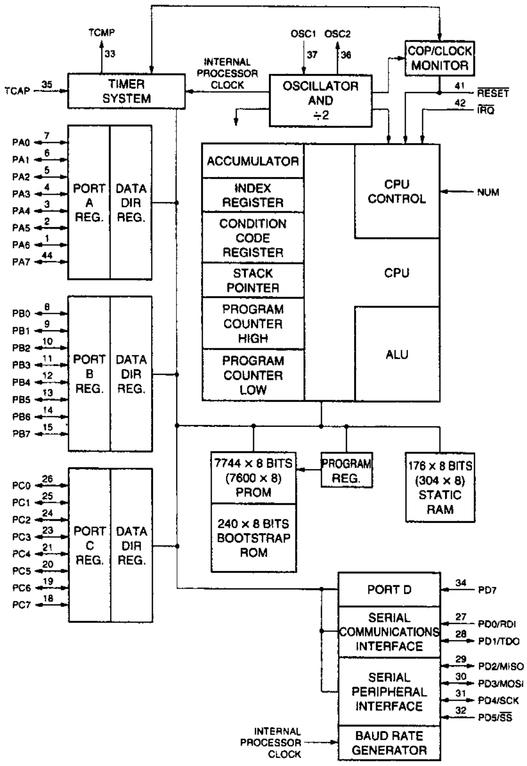

PIN NO.	I/O	SIGNAL	PIN NO.	I/O	SIGNAL
1	I/O	PA6	23	I/O	PC3
2	I/O	PA5	24	I/O	PC2
3	I/O	PA4	25	I/O	PC1
4	I/O	PA3	26	I/O	PC1
5	I/O	PA2	27	I	PD0/RDI
6	I/O	PA1	28	I/O	PD1/TDO
7	I/O	PA0	29	I/O	PD2/MISO
8	I/O	PB0	30	I/O	PD3/MOSI
9	I/O	PB1	31	I/O	PD4/SCK
10	I/O	PB2	32	I	PD5/SS
11	I/O	PB3	33	O	TCMP
12	I/O	PB4	34	I	PD7
13	I/O	PB5	35	I	TCAP
14	I/O	PB6	36	O	OSC2
15	I/O	PB7	37	I	OSC1
16	—	NC	38	—	VDD(+5V)
17	—	GND	39	—	NC
18	I/O	PC7	40	—	NC
19	I/O	PC6	41	I	RESET
20	I/O	PC5	42	I	IRQ
21	I/O	PC4	43	—	GND
22	—	NC	44	I/O	PA7

INPUT
IRQ ; INTERRUPT REQUEST
OSC1 ; OSCILLATOR
PD0 - PD5, PD7 ; PROGRAMMABLE D PORT
RESET ; SYSTEM RESET
RDI ; RECEIVING DATA
SS ; SUB SELECT
TCAP ; CAPTURE FEATURE FOR THE ONE-CHIP PROGRAMMABLE TIMER

OUTPUT
OSC2 ; OSCILLATOR
SCK ; SERIAL CLOCK
TCMP ; COMPARE FEATURE OF THE ONE-CHIP TIMER
TDO ; TRANSMISSION DATA

INPUT/OUTPUT
MISO ; MASTER INPUT, SUB OUTPUT
MOSI ; MASTER OUTPUT, SUB INPUT
PA0 - PA6 ; PROGRAMMABLE A PORT
PB0 - PB6 ; PROGRAMMABLE B PORT
PC0 - PC6 ; PROGRAMMABLE C PORT

NJM5532S-D (JRC)

DUAL OPERATIONAL AMPLIFIER
-SIDE VIEW-

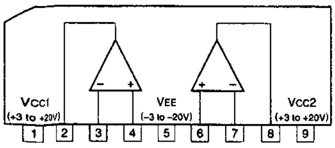

NJM79L09UA(TE1) (JRC)–9 V(100 mA)

VOLTAGE REGULATOR

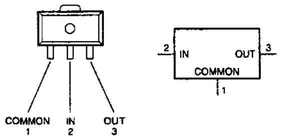

PQ05SZ1U (SHARP)+5 V(1 A)
PQ05SZ5U (SHARP)+5 V(0.5 A)

POSITIVE VOLTAGE REGULATOR
—TOP VIEW—

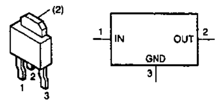

PQ20VZ5U (SHARP)

POSITIVE VOLTAGE REGULATOR (300 mA)
-TOP VIEW-

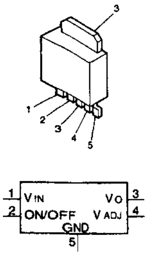

S-81230SG-QB-T1 (SEIKO I&E)

C-MOS VOLTAGE REGULATOR
-TOP VIEW-

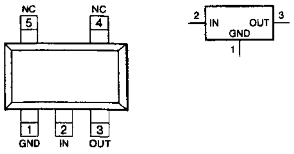

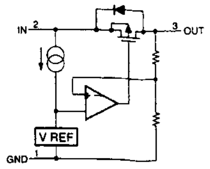

SM5872AS-ET (NPC)FLAT PACKAGE

C-MOS 2-CHANNEL D/A CONVERTER FOR DIGITAL AUDIO
-TOP VIEW-

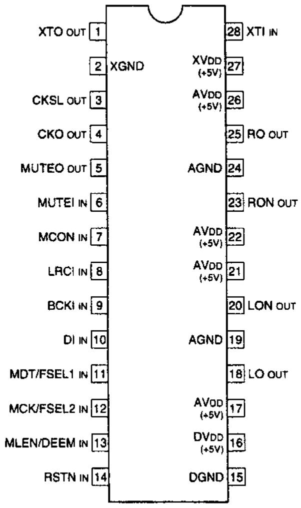

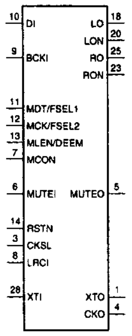

AVDD, AGND ; ANALOG
DVDD, DGND ; DIGITAL
XVDD, XGND ; FOR CRYSTAL OSCILLATOR

INPUT

BCKI	; BIT CLOCK
CKSL	; SYSTEM CLOCK SELECT (L : 256fs/H : 512fs)
DI	; DATA
LRCI	; SAMPLE RATE (fs) CLOCK (L : R-CH/H : L-CH)
MCK/FSEL2	; MCON = H : MICROCOMPUTER INTERFACE CLOCK MCON = L : FILTER SELECT*2
MCON	; INTERFACE SELECT CONTROL*1
MDT/FSEL1	; MCON = H : MICROCOMPUTER INTERFACE DATA MCON = L : FILTER SELECT*2
MLEN/DEEM	; MCON = H : MICROCOMPUTER INTERFACE LATCH ENABLE MCON = L : DEEMPHASIS CONTROL
MUTEI	; DF OUTPUT SOFT MUTE (L : OFF/H : ON)
RSTN	; SYSTEM RESET
XTI	; OSCILLATOR

*1

MCON	MODE
0	FSEL1, FSEL2, DEEM
1	MDT, MCK, MLEN

0 ; LOW LEVEL
1 ; HIGH LEVEL

*2

MCON	FSEL1	FSEL2	
0	0	0 (44.1kHz)	1 (48.0kHz)
0	1	0 (44.1kHz)	1 (32.0kHz)

0 ; LOW LEVEL
1 ; HIGH LEVEL

OUTPUT

CKO	, CLOCK
LO	; L-CH PWM (PULSE WIDTH MODULATION) (+)
LON	; L-CH PWM (PULSE WIDTH MODULATION) (–)
MUTEO	; INFINITY ZERO DETECT
RO	; R-CH PWM (PULSE WIDTH MODULATION) (+)
RON	; R-CH PWM (PULSE WIDTH MODULATION) (–)
XTO	; OSCILLATOR

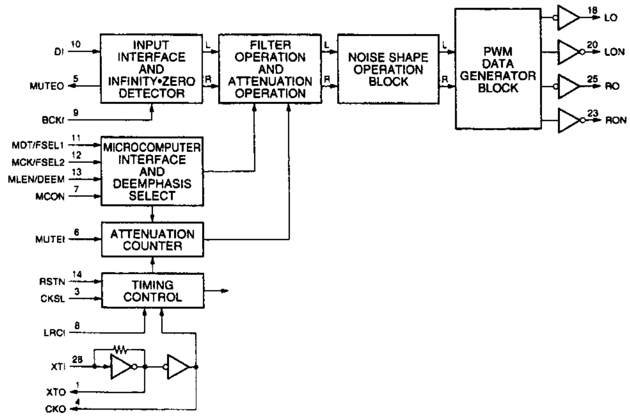

SN74HC08ANS (TI)FLAT PACKAGE
SN74HC08ANS-E05
TC74VHC08F(EL) (TOSHIBA)
TC74VHC08FS(EL) (TOSHIBA)FLAT PACKAGE
TC74VHC08FT(EL) (TOSHIBA)FLAT PACKAGE
TC74VHCT08AFT(EL)
TC74VHCT08FS(EL) (TOSHIBA)
TC74VHCT08FT(EL)

C-MOS QUAD 2-INPUT AND GATE
- TOP VIEW -

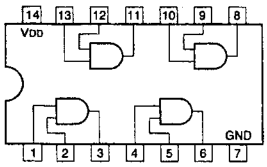

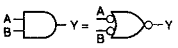

$Y = A \bullet B = \overline{\overline{A} + \overline{B}}$

A	B	Y
0	0	0
0	1	0
1	0	0
1	1	1

0 ; LOW LEVEL
1 ; HIGH LEVEL

NOTE :

TYPE	VDD
AC	+2 to +5.5V
TC40H	+2 to +8V
ACT/HCT	+5V
OTHER TYPES	+2 to +6V

SN74HCT244ANS (TI)FLAT PACKAGE
SN74HCT244ANS-E05

C-MOS BUS BUFFER WITH 3-STATE OUTPUTS
-TOP VIEW-

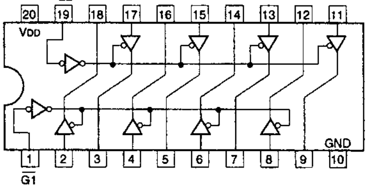

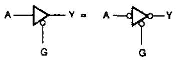

G	A	Y
0	0	0
0	1	1
X	X	HI-Z

0 ; LOW LEVEL
1 ; HIGH LEVEL
X ; DON'T CARE
HI-Z ; HIGH IMPEDANCE

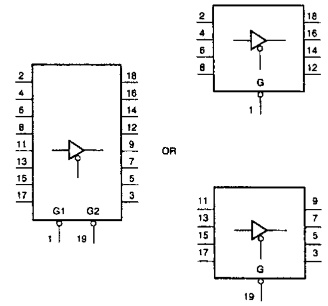

NOTE:

TYPE	VDD
74HC 40H	+2 to +6V
74ACT 74BCT 74FCT 74HCT	+4.5 to +5.5V
74LCX	+2 to +3.6V
74AC/74VHC	+2 to +5.5V

SN74HC377ANS (TI)
SN74HC377ANS-E05

C-MOS OCTAL D-TYPE FLIP-FLOPS WITH ENABLE
-TOP VIEW-

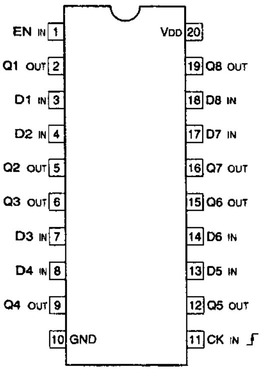

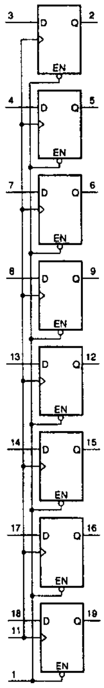

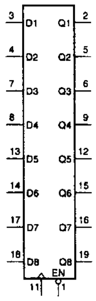

EACH FLIP-FLOP

INPUTS			OUT
EN	CK	D	Q
1	X	X	Qo
0	↑	1	1
0	↑	0	0
X	0	X	Qo

0 ; LOW LEVEL
1 ; HIGH LEVEL
X ; DON'T CARE

TYPE	VDD
74ACT TYPES 74FCT TYPES	+5V
OTHER TYPES	+2V to +6V

SN74HC541ANS (TI)FLAT PACKAGE
SN74HC541ANS-E05
SN74HCT541ANS (TI)FLAT PACKAGE
SN74HCT541ANS-E05
TC74VHC541F (TOSHIBA)FLAT PACKAGE
TC74VHC541F(EL)
TC74VHC541FS(EL) (TOSHIBA)FLAT PACKAGE
TC74VHC541FT(EL) (TOSHIBA)FLAT PACKAGE
TC74VHCT541AFT(EL) (TOSHIBA)FLAT PACKAGE
TC74VHCT541F (TOSHIBA)FLAT PACKAGE
TC74VHCT541F(EL)
TC74VHCT541FS(EL) (TOSHIBA)FLAT PACKAGE

C-MOS BUFFERS AND LINE DRIVERS WITH 3-STATE OUTPUTS
-TOP VIEW-

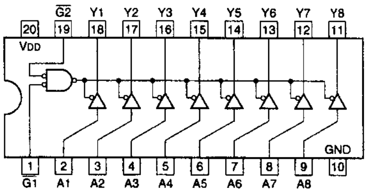

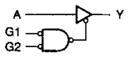

G1	G2	A	Y
0	0	0	0
0	0	1	1
1	X	X	HI-Z
X	1	X	HI-Z

0 ; LOW LEVEL
1 ; HIGH LEVEL
X ; DON'T CARE
HI-Z ; HIGH IMPEDANCE

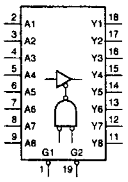

NOTE :

TYPE	VDD
TC74AC/TC74VHC	+2 to +5.5V
ABT/ACT/BCT/HCT/VHCT	+5V
LCX	+2 to +3.6V
OTHER TYPES	+2 to +6V

SN74LS221NS-E05 (TI)FLAT PACKAGE

TTL MONOSTABLE MULTIVIBRATOR WITH SCHMITT TRIGGER INPUT
—TOP VIEW—

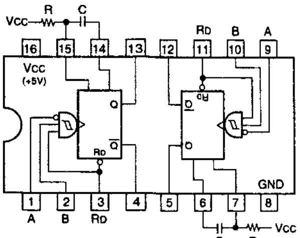

INPUTS			OUTPUTS	
RD	A	B	Q	$\overline{Q}$
0	X	X	0	1
X	1	X	0	1
X	X	0	0	1
1	0	↑	⊓	⊔
1	↓	1	⊓	⊔
↑	0	1	⊓	⊔

0 ; LOW LEVEL
1 ; HIGH LEVEL
X ; DON'T CARE

OUTPUT PULSE WIDTH = 0.7CR

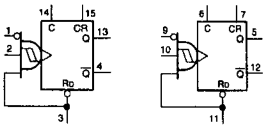

TA8424F(TP2) (TOSHIBA)

MOTOR DRIVER FOR DIRECT CURRENT COMPACT MOTOR
—TOP VIEW—

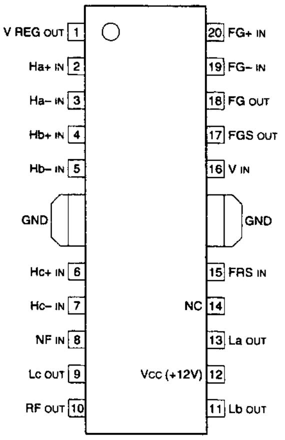

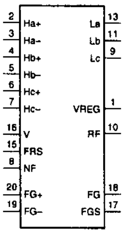

INPUT
FG +/– ; FG INPUT AMP
FRS ; MOTOR ROTATIONAL DIRECTION CONTROL
Ha, Hb, Hc +/– ; HOLE ELEMENT AMP
NF ; FEEDBACK OUTPUT CURRENT
V ; CONTROL VOLTAGE

OUTPUT
FG ; FG GAIN AMP
FGS ; FG HYSTERESIS AMP
La, Lb, Lc ; 3 PHASE MOTOR DRIVE
RF ; OUTPUT CURRENT DETECTOR
V REG ; VOLTAGE REGULATOR

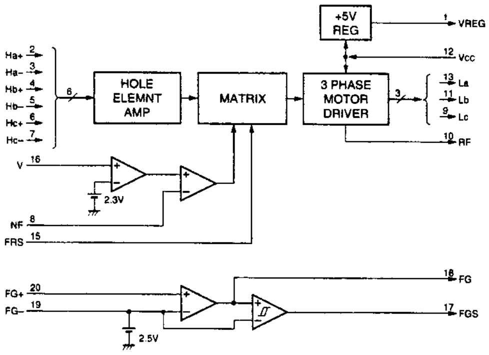

TA7267P (TOSHIBA)

DC MOTOR DRIVER
-PRINTED SIDE VIEW-

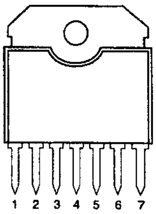

INPUTS		OUTPUTS		MODE
1	2	1	2	
1	1	0	0	BRAKE
0	1	0	1	ROTATION/REV. ROTATION
1	0	1	0	REV. ROTATION/ ROTATION
0	0	HI-Z		STOP

0 ; LOW LEVEL
1 ; HIGH LEVEL
HI-Z ; HIGH IMPEDANCE

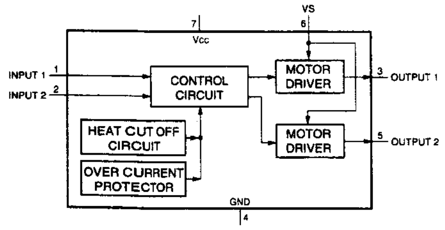

TC4W53FU (TOSHIBA)CHIP PACKAGE
TC4W53FU(TE12R)

C-MOS 2-CHANNEL MULTIPLEXER / DEMULTIPLEXER

—TOP VIEW—

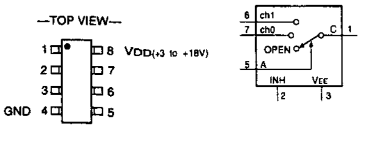

CONT.INPUT		ON CHANNEL
INH	A	
0	0	ch0
0	1	ch1
1	X	OPEN

0 ; LOW LEVEL
1 ; HIGH LEVEL
X ; DON'T CARE

TC5081AP (TOSHIBA)

C-MOS PHASE COMPARATOR
-SIDE VIEW-

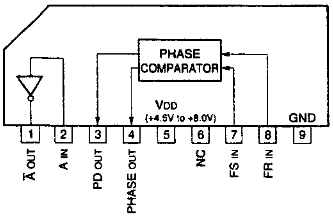

PHASE COMPARATOR TIMING CHART

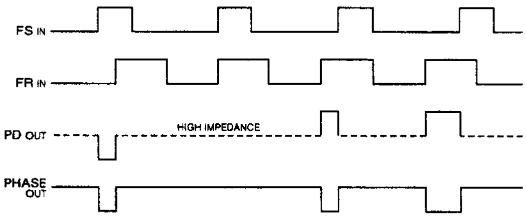

TC74ACT157FS(EL) (TOSHIBA)FLAT PACKAGE(SMALL)
TC74ACT157FT(EL) (TOSHIBA)FLAT PACKAGE
TC74VHC157F (TOSHIBA)FLAT PACKAGE
TC74VHC157F(EL)
TC74VHC157FS(EL) (TOSHIBA)
TC74VHC157FT(EL) (TOSHIBA)FLAT PACKAGE

C-MOS QUAD 2-LINE-TO-1-LINE DATA SELECTOR/ DEMULTIPLEXER
—TOP VIEW—

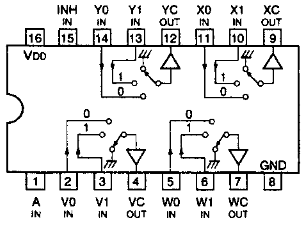

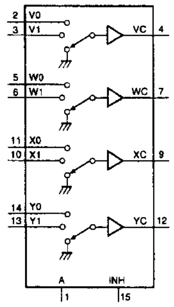

NOTE:

TYPE	VDD
74ACT/74FCT	+5V
TC74AC157P TC74AC157	+2 to +5.5V
TC40H	+2 to +8V
OTHER TYPES	+2 to +6V

CONT.IN		ON CHANNEL
INH	A	
0	0	0
0	1	1
1	X	GND

0 ; LOW LEVEL
1 ; HIGH LEVEL
X ; DON'T CARE

SN74HC86ANS-E05
TC74HC86AF (TOSHIBA)FLAT PACKAGE
TC74VHC86F (TOSHIBA)FLAT PACKAGE
TC74VHC86F(EL)

C-MOS QUAD EXCLUSIVE OR GATES
-TOP VIEW-

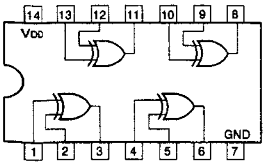

Y = Ā • B + A • B̄

A	B	Y
0	0	0
0	1	1
1	0	1
1	1	0

0 ; LOW LEVEL
1 ; HIGH LEVEL

NOTE:

TYPE	VDD
74AC/74VHC	+2V to +5.5V
74ACT/74HCT	+4.5 to +5.5V
OTHER TYPES	+2V to +6V

TC74HC191AF (TOSHIBA)FLAT PACKAGE
TC74HC191AF(EL)

C-MOS PRESETTABLE SYNCHRONOUS 4-BIT BINARY UP/DOWN COUNTER
—TOP VIEW—

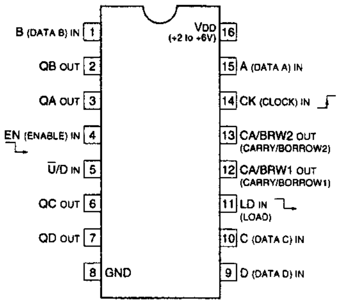

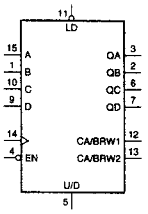

MODE SELECTION

CONTROL INPUTS			MODE
LD	EN	Ū/D	
0	X	X	PRESET (ASYNCHRONOUS)
1	1	X	NO COUNT
1	0	0	UP COUNT
1	0	1	DOWN COUNT

0 ; LOW LEVEL
1 ; HIGH LEVEL
X ; DON'T CARE

COUNT SEQUENCE

COUNT	OUTPUTS			
	QD	QC	QB	QA
0	0	0	0	0
1	0	0	0	1
2	0	0	1	0
3	0	0	1	1
4	0	1	0	0
5	0	1	0	1
6	0	1	1	0
7	0	1	1	1
8	1	0	0	0
9	1	0	0	1
10	1	0	1	0
11	1	0	1	1
12	1	1	0	0
13	1	1	0	1
14	1	1	1	0
15	1	1	1	1

UP COUNT — DOWN COUNT

CA/BRW OUTPUTS

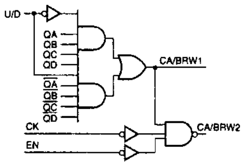

CA/BRW1 OUTPUT IS HIGH WHEN COUNT IS "15" AT UP-COUNT OR WHEN COUNT IS "0" AT DOWN COUNT.

CA/BRW2 OUTPUT IS LOW WHEN BOTH THE CLOCK AND EN INPUTS ARE LOW AND CA/BRW1 OUTPUT IS HIGH.

TC74HC4051AFS(EL) (TOSHIBA)

C-MOS 8-CHANNEL ANALOG MULTIPLEXER/DEMULTIPLEXER
—TOP VIEW—

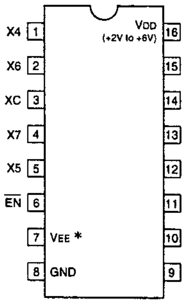

VEE * ; VDD - VEE=+3V to +12V

CONTROL INPUTS				SELECTED CHANNEL
EN	SELECT			
	C	B	A	
0	0	0	0	X0
0	0	0	1	X1
0	0	1	0	X2
0	0	1	1	X3
0	1	0	0	X4
0	1	0	1	X5
0	1	1	0	X6
0	1	1	1	X7
1	X	X	X	OPEN

0 ; LOW LEVEL
1 ; HIGH LEVEL
X ; DON'T CARE

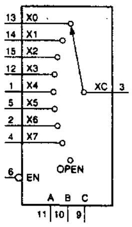

X0-X7 ; ANALOG INPUTS/OUTPUTS
XC ; COMMON INPUT/OUTPUT
A, B, C ; CHANNEL SELECT INPUT
EN ; ENABLE INPUT

TC74HC4053AFS (TOSHIBA)FLAT PACKAGE
TC74HC4053AFS-EL

C-MOS TRIPLE 2-CHANNEL ANALOG MULTIPLEXER/DEMULTIPLEXER
-TOP VIEW-

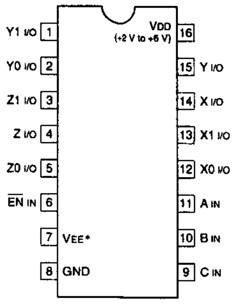

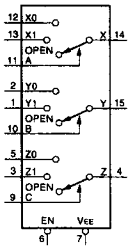

VEE*: VDD − VEE = +3 V to +12 V
VEE ≦ GND

CONTROL INPUTS				ON CHANNEL		
EN	SELECT					
	C	B	A			
0	0	0	0	Z0	Y0	X0
0	0	0	1	Z0	Y0	X1
0	0	1	0	Z0	Y1	X0
0	0	1	1	Z0	Y1	X1
0	1	0	0	Z1	Y0	X0
0	1	0	1	Z1	Y0	X1
0	1	1	0	Z1	Y1	X0
0	1	1	1	Z1	Y1	X1
1	X	X	X	OPEN		

0 ; LOW LEVEL
1 ; HIGH LEVEL
X ; DON'T CARE

SN74HC00ANS (TI)FLAT PACKAGE
SN74HC00ANS-E05
SN74HCT00ANS-E05 (TI)FLAT PACKAGE
TC74VHC00F (TOSHIBA)FLAT PACKAGE
TC74VHC00F(EL)
TC74VHC00FS(EL) (TOSHIBA)FLAT PACKAGE
TC74VHC00FT(EL) (TOSHIBA)FLAT PACKAGE
TC74VHCT00AFT(EL)
TC74VHCT00FS(EL) (TOSHIBA)FLAT PACKAGE
TC74VHCT00FT(EL) (TOSHIBA)FLAT PACKAGE

C-MOS QUAD 2-INPUT NAND GATES
-TOP VIEW-

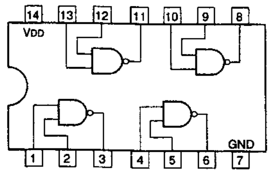

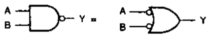

$Y = \overline{A \cdot B} = \overline{A} + \overline{B}$

A	B	Y
0	0	1
0	1	1
1	0	1
1	1	0

0 ; LOW LEVEL
1 ; HIGH LEVEL

NOTE:

TYPE	VDD
74AC/74VHC	+2 to +5.5V
74ACT/74HCT/74VHCT	+4.5 to +5.5V
LCX	+2 to +3.6V
OTHER TYPES	+2 to +6V

TC74VHC02F (TOSHIBA)FLAT PACKAGE
TC74VHC02F(EL)

C-MOS QUAD 2-INPUT NOR GATES
-TOP VIEW-

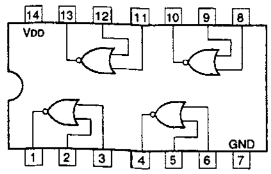

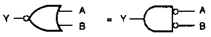

$Y = \overline{A + B} = \overline{A} \cdot \overline{B}$

A	B	Y
0	0	1
0	1	0
1	0	0
1	1	0

0 ; LOW LEVEL
1 ; HIGH LEVEL

NOTE:

TYPE	VDD
74HC	+2 to +6V
74AC/74VHC	+2 to +5.5V
74HCT/74ACT	+4.5 to +5.5V
74LCX	+2 to +3.6V

TC74VHC04F (TOSHIBA)FLAT PACKAGE
TC74VHC04F(EL)
TC74VHC04FS(EL)
TC74VHC04FT(EL) (TOSHIBA)

C-MOS HEX INVERTERS
-TOP VIEW-

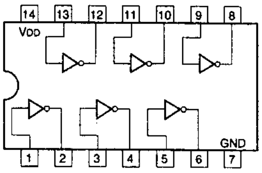

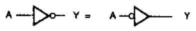

$Y = \overline{A}$

A	Y
0	1
1	0

0 ; LOW LEVEL
1 ; HIGH LEVEL

NOTE:

TYPE	VDD
74AC/74VHC/74VHCT	+2 to +5.5V
74ACT/74HCT	+4.5 to +5.5V
74LCX	+2 to +3.6V
OTHER TYPE	+2 to +6V

TC74VHC11F (TOSHIBA)FLAT PACKAGE
TC74VHC11F(EL)

C-MOS 3-INPUT POSITIVE-AND GATE
—TOP VIEW—

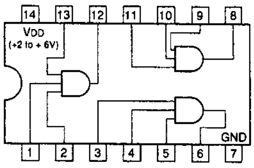

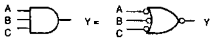

$Y = A \cdot B \cdot C = \overline{\overline{A} + \overline{B} + \overline{C}}$

A	B	C	Y
0	0	0	0
0	0	1	0
0	1	0	0
0	1	1	0
1	0	0	0
1	0	1	0
1	1	0	0
1	1	1	1

0 ; LOW LEVEL
1 ; HIGH LEVEL

NOTE:

TYPE	VDD
TC74VHC11	+2V to + 5.5V
OTHER TYPES	+2V to + 6V

TC74VHC123AFS(EL) (TOSHIBA)FLAT PACKAGE
TC74VHC123AFT(EL) (TOSHIBA)FLAT PACKAGE

C-MOS DUAL RETRIGGERABLE MONOSTABLE MULTIVIBRATORS
-TOP VIEW-

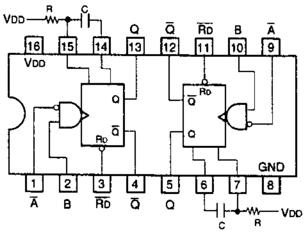

INPUTS			OUTPUTS	
R̄D	Ā	B	Q	Q̄
0	X	X	0	1
1	1	X	0	1
1	X	0	0	1
1	0	↑	⎍	⎍̅
1	↓	1	⎍	⎍̅
↑	0	1	⎍	⎍̅

0 ; LOW LEVEL
1 ; HIGH LEVEL
X ; DON'T CARE

OUTPUT PULSE WIDTH = 0.46 CR

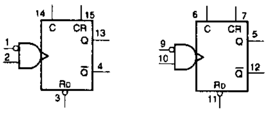

NOTE :

TYPE	VDD
TC74HC123AF	+5V
TC74VHC	+2V to +5.5V
OTHER TYPES	+2V to +6V

TC74VHC125F (TOSHIBA)FLAT PACKAGE
TC74VHC125F(EL)
TC74VHC125FS(EL) (TOSHIBA)FLAT PACKAGE
TC74VHC125FT(EL) (TOSHIBA)FLAT PACKAGE

C-MOS BUS BUFFER GATES WITH 3-STATE OUTPUT
-TOP VIEW-

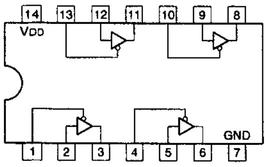

G	A	Y
0	0	0
0	1	1
1	X	HI-Z

0 ; LOW LEVEL
1 ; HIGH LEVEL
X ; DON'T CARE
HI-Z ; HIGH IMPEDANCE

NOTE :

TYPE	VDD
74AC/ 74VHC	+2 to +5.5V
74ACT/74HCT	+4.5 to +5.5V
74LCX	+2 to +3.6V
74LVT/74LVC	+2.7 to +3.6V
OTHER TYPES	+2 to +6V

TC74VHC163F (TOSHIBA)FLAT PACKAGE
TC74VHC163F(EL)

C-MOS PRESETTABLE SYNCHRONOUS 4-BIT BINARY COUNTER
—TOP VIEW—

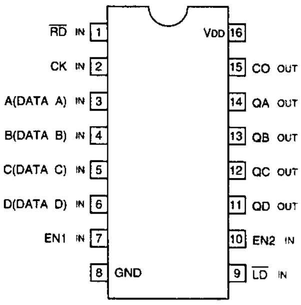

MODE SELECTION

CONTROL INPUTS				MODE
RD	LD	EN1	EN2	
0	X	X	X	RESET (SYNCHRONOUS)
1	0	X	X	PRESET (SYNCHRONOUS)
1	1	0	X	NO COUNT
1	1	X	0	NO COUNT
1	1	1	1	COUNT

CARRY OUTPUT "CO"

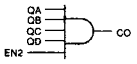

CO IS HIGH WHEN EN2 INPUT IS HIGH AND COUNT IS "15".

NOTE:

TYPE	VDD
HC	+2 to +6V
AC/VHC	+2 to +5.5V
HCT/ACT/FCT	+5V

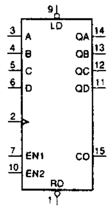

COUNT SEQUENCE

COUNT	OUTPUTS			
	QD	QC	QB	QA
0	0	0	0	0
1	0	0	0	1
2	0	0	1	0
3	0	0	1	1
4	0	1	0	0
5	0	1	0	1
6	0	1	1	0
7	0	1	1	1
8	1	0	0	0
9	1	0	0	1
10	1	0	1	0
11	1	0	1	1
12	1	1	0	0
13	1	1	0	1
14	1	1	1	0
15	1	1	1	1

TC74VHC138F(EL) (TOSHIBA)

C-MOS 3-TO-8 LINE DECODER / DEMULTIPLEXER
—TOP VIEW—

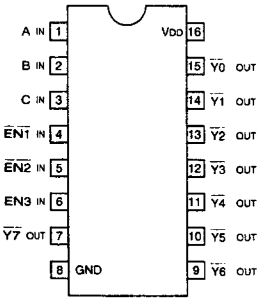

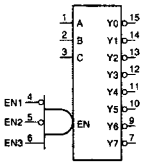

INPUTS				OUTPUTS							
EN	C	B	A	Y7	Y6	Y5	Y4	Y3	Y2	Y1	Y0
0	X	X	X	1	1	1	1	1	1	1	1
1	0	0	0	1	1	1	1	1	1	1	0
1	0	0	1	1	1	1	1	1	1	0	1
1	0	1	0	1	1	1	1	1	0	1	1
1	0	1	1	1	1	1	1	0	1	1	1
1	1	0	0	1	1	1	0	1	1	1	1
1	1	0	1	1	1	0	1	1	1	1	1
1	1	1	0	1	0	1	1	1	1	1	1
1	1	1	1	0	1	1	1	1	1	1	1

EN = $\overline{EN1} \cdot \overline{EN2} \cdot EN3$

0 ; LOW LEVEL
1 ; HIGH LEVEL
X ; DON'T CARE

NOTE:

TYPE	VDD
74HCT138 TYPE	+5V
74ACT138 TYPE	+4.5 to +5.5V
TC74AC138 TYPE TC74VHC138	+2 to +5.5V
OTHER TYPES	+2 to +6V

TC74VHC21F (TOSHIBA)FLAT PACKAGE
TC74VHC21F(EL)

C-MOS DUAL 4-INPUT POSITIVE AND GATE
—TOP VIEW—

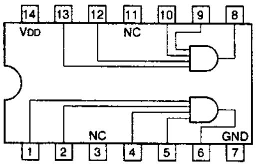

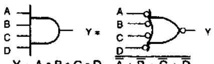

Y = A • B • C • D = $\overline{\overline{A}+\overline{B}+\overline{C}+\overline{D}}$

A	B	C	D	Y
0	0	0	0	0
0	0	0	1	0
0	0	1	0	0
0	0	1	1	0
0	1	0	0	0
⋮	⋮	⋮	⋮	⋮
1	1	0	1	0
1	1	1	0	0
1	1	1	1	1

0 ; LOW LEVEL
1 ; HIGH LEVEL

NOTE:

TYPE	VDD
HC	+2V to + 6V
VHC	+2V to + 5.5V

TC74VHC175F (TOSHIBA)FLAT PACKAGE
TC74VHC175F(EL)
TC74VHC175FS(EL) (TOSHIBA)FLAT PACKAGE
TC74VHC175FT(EL) (TOSHIBA)FLAT PACKAGE

C-MOS QUAD D-TYPE FLIP-FLOPS WITH RESET
-TOP VIEW-

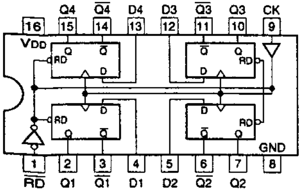

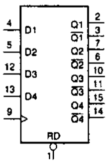

RD	CK	D	Q	$\overline{Q}$
0	X	X	0	1
1	↑	1	1	0
1	↑	0	0	1
1	0	X	Q_0	$\overline{Q_0}$

0 ; LOW LEVEL
1 ; HIGH LEVEL
X ; DON'T CARE
Q_0 ; NO CHANGE
$\overline{Q_0}$; NO CHANGE

NOTE:

TYPE	VDD
AC TYPE	+2V to +5.5V
74ACT175 TYPE	+4.5V to 5.5V
OTHER TYPES	+2V to 6V

TC74VHC27F(EL) (TOSHIBA)

C-MOS 3-LINE POSITIVE-NOR GATE
-TOP VIEW-

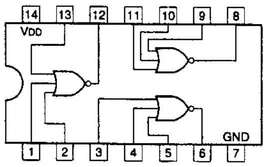

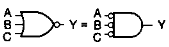

Y = $\overline{A+B+C} = \overline{A} \cdot \overline{B} \cdot \overline{C}$

A	B	C	Y
0	0	0	1
0	0	1	0
0	1	0	0
0	1	1	0
1	0	0	0
1	0	1	0
1	1	0	0
1	1	1	0

0 ; LOW LEVEL
1 ; HIGH LEVEL

NOTE :

TYPE	VDD
TC40H	+2 to +8V
OTHERS	+2 to +6V

SN74HC245ANS (TI)FLAT PACKAGE
SN74HC245ANS-E05
SN74LVC245ANS-E20
SN74LVC245ANS-E20 (TI)
SN74LVC245APW-E20 (TI)
TC74HCT245AF (TOSHIBA)
TC74HCT245AF(EL)
TC74VHC245F(EL) (TOSHIBA)FLAT PACKAGE
TC74VHC245FS(EL) (TOSHIBA)FLAT PACKAGE
TC74VHC245FT(EL) (TOSHIBA)FLAT PACKAGE
TC74VHCT245F(EL) (TOSHIBA)FLAT PACKAGE

C-MOS BILATERAL BUS TRANSCEIVERS WITH 3-STATE OUTPUTS
-TOP VIEW-

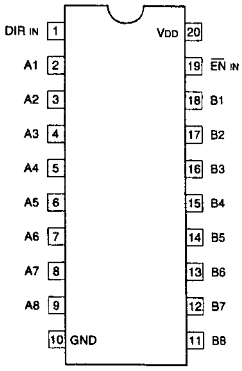

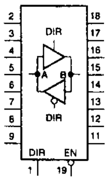

EN	DIR	OPERATION
0	0	B to A
0	1	A to B
1	X	HI-Z

0 ; LOW LEVEL
1 ; HIGH LEVEL
X ; DON'T CARE
HI-Z ; HIGH IMPEDANCE

NOTE:

TYPE	VDD
74HC	+2 to +6V
74ABT 74ACT 74BCT 74HCT	+4.5 to +5.5V
74AC 74VHC	+2 to +5.5V
74LCX	+2 to +3.6V
74LVT	+2.7 to +3.6V

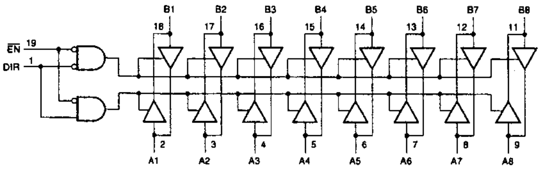

TC74VHC374F (TOSHIBA)FLAT PACKAGE
TC74VHC374F(EL)

C-MOS 3-STATE OCTAL D-TYPE FLIP-FLOP
-TOP VIEW-

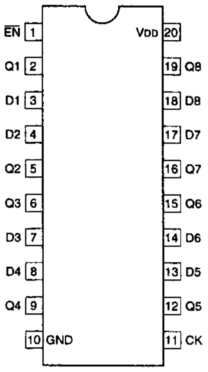

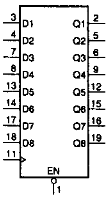

INPUTS			OUT
EN	D	CK	O
0	1	↑	1
0	0	↑	0
0	X	0	Qo
1	X	X	HI-Z

0 ; LOW LEVEL
1 ; HIGH LEVEL
X ; DON'T CARE
HI-Z ; HIGH IMPEDANCE

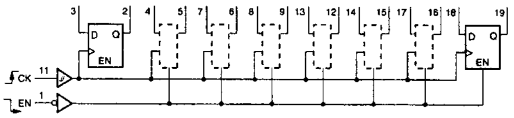

NOTE :

TYPE	VDD
74AC/74HC	+2 to +6V
74ACT/74BCT/74FCT /74HCT	+5V
74VHC	+2 to +5.5V

TC74VHC74F (TOSHIBA)FLAT PACKAGE
TC74VHC74F(EL)
TC74VHC74FS(EL) (TOSHIBA)FLAT PACKAGE
TC74VHC74FT(EL) (TOSHIBA)FLAT PACKAGE
TC74VHCT74AFT(EL) (TOSHIBA)FLAT PACKAGE
TC74VHCT74FS(EL) (TOSHIBA)

C-MOS DUAL D-TYPE FLIP-FLOPS WITH DIRECT SET/RESET
-TOP VIEW-

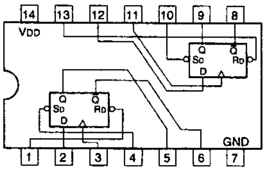

INPUTS				OUTPUTS	
SD	RD	CK	D	Qn+1	$\overline{Qn+1}$
0	1	X	X	1	0
1	0	X	X	0	1
0	0	X	X	1	1
1	1	↑	1	1	0
1	1	↑	0	0	1
1	1	0	X	Qn	$\overline{Qn}$

0 ; LOW LEVEL
1 ; HIGH LEVEL
X ; DON'T CARE

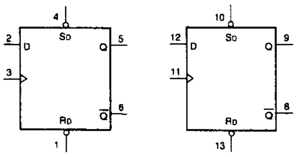

NOTE:

TYPE	VDD
74HCT/74ACT	+4.5 to +5.5V
74LVC	+2.7 to +3.6V
74AC/74VHC	+2 to +5.5V
OTHERS	+2 to +6V

TC74VHC32F (TOSHIBA)FLAT PACKAGE
TC74VHC32F(EL)
TC74VHC32FS(EL) (TOSHIBA)FLAT PACKAGE
TC74VHC32FT(EL) (TOSHIBA)FLAT PACKAGE

C-MOS QUAD 2-INPUT OR GATES
-TOP VIEW-

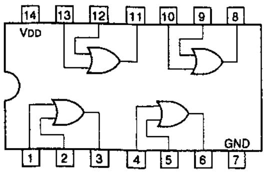

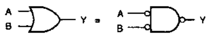

$Y = A + B = \overline{\overline{A} \cdot \overline{B}}$

A	B	Y
0	0	0
0	1	1
1	0	1
1	1	1

0 ; LOW LEVEL
1 ; HIGH LEVEL

NOTE:

TYPE	VDD
74AC/74VHC	+2 to +5.5V
74HC	+2 to +6V
74HCT	+4.5 to +5.5V

SC7S04F (MOTOROLA)CHIP PACKAGE
TC4S69F (TOSHIBA)CHIP PACKAGE
TC4S69F(TE85R)
TC7S04F(TE85R)
TC7S04FU(TE85R) (TOSHIBA)FLAT PACKAGE
TC7S04FU-TE85L (TOSHIBA)CHIP PACKAGE
TC7SH04FU (TOSHIBA)CHIP PACKAGE
TC7SH04FU-TE85R

C-MOS INVERTER

-TOP VIEW-

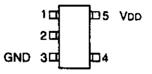

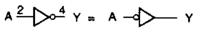

$Y = \overline{A}$

A	Y
0	1
1	0

0 ; LOW LEVEL
1 ; HIGH LEVEL

TYPE	VDD
7S04F 7SU04F 7SU04FU	+2 to +6V
4S69F 4SU69F	+3 to +18V
7SH04FU 7SHU04FU	+2 to +5.5V

TC7S66F (TOSHIBA)
TC7S66F(TE85R)
TC7S66FU (TOSHIBA)
TC7S66FU(TE85R)

C-MOS ANALOG SWITCH
—TOP VIEW—

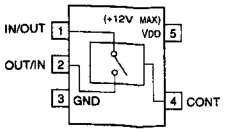

TC7W04FU (TOSHIBA)CHIP PACKAGE
TC7W04FU(TE12R) (TOSHIBA)FLAT PACKAGE
TC7W04FU-TE12L

C-MOS HEX INVERTERS

—TOP VIEW—

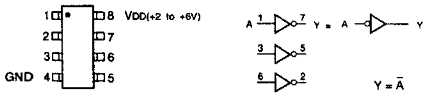

A	Y
0	1
1	0

0 ; LOW LEVEL
1 ; HIGH LEVEL

TL064CPW (TI)FLAT PACKAGE
TL064CPW-E05

OPERATIONAL AMPLIFIER
(J FET INPUT)
—TOP VIEW—

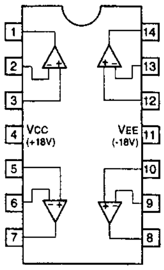

TC7W32FU-TE12L (TOSHIBA)CHIP PACKAGE

C-MOS DUAL 2-INPUT OR GATE
—TOP VIEW—

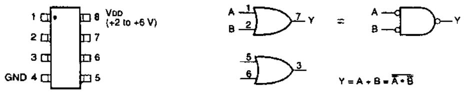

A	B	Y
0	0	0
0	1	1
1	0	1
1	1	1

0; LOW LEVEL
1; HIGH LEVEL

UPC324G2 (NEC)FLAT PACKAGE
UPC324G2-E2

QUAD OPERATIONAL AMPLIFIERS
-TOP VIEW-

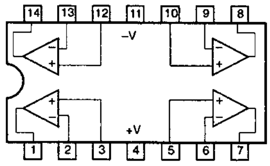

	+V	–V
SINGLE SUPPLY	+3 to +32 V	GND
DUAL SUPPLIES	+1.5 to +16 V	–1.5 to –16 V

TD62504F-TEL (TOSHIBA)
TD62504F(EL)

SINGLE DRIVER
—TOP VIEW—

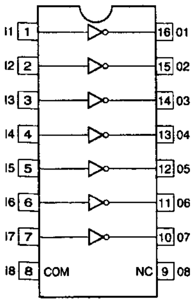

I1 - I8 ; IN
01 - 08 ; OUT

UPC4574G2 (NEC)
UPC4574G2-T2

QUAD OPERATIONAL AMPLIFIER
—TOP VIEW—

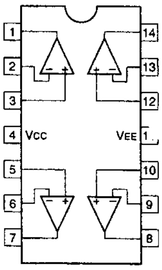

VCC – VEE ≦ 36V

UPD42280GU-30 (NEC)FLAT PACKAGE
UPD42280GU-30-E2

C-MOS 2M (256 x 8) BIT FIELD BUFFER
—TOP VIEW—

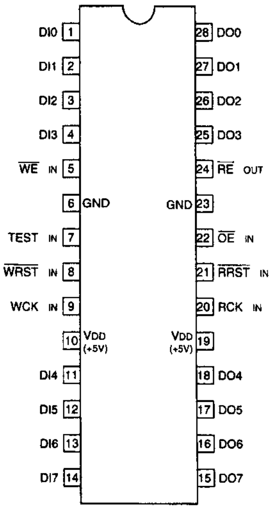

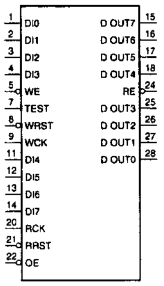

DI0 – 7 ; DATA INPUTS
DO0 – 7 ; DATA OUTPUTS
OE ; OUTPUT ENABLE INPUT
RCK ; READ CLOCK INPUT
RE ; READ ENABLE OUTPUT
RRST ; READ RESET INPUT
TEST ; TEST INPUT
WCK ; WRITE CLOCK INPUT
WE ; WRITE ENABLE INPUT
WRST ; WRITE RESET INPUT

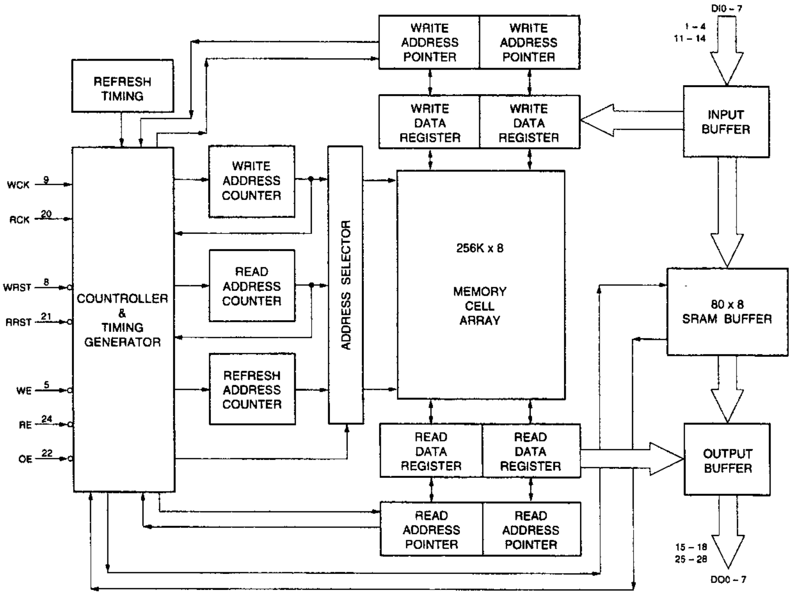

ZA4024 (TI)

SIGNAL PROCESSOR FOR DIGITAL VCR
-TOP VIEW-

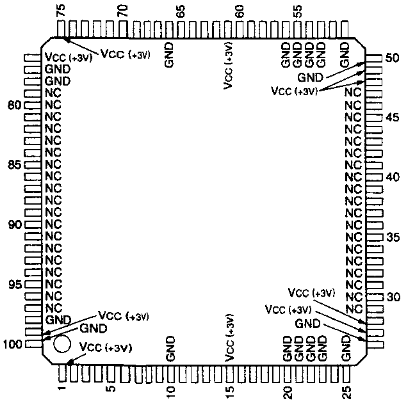

PIN No.	I/O	SIGNAL	PIN No.	I/O	SIGNAL	PIN No.	I/O	SIGNAL	PIN No.	I/O	SIGNAL	PIN No.	I/O	SIGNAL
1	—	Vcc	21	—	GND	41	—	NC	61	—	Vcc	81	—	NC
2	O	DO0	22	—	GND	42	—	NC	62	I	CLR	82	—	NC
3	O	DO1	23	—	GND	43	—	NC	63	I	WS	83	—	NC
4	O	DO2	24	I	RFSEL	44	—	NC	64	I	CKW	84	—	NC
5	O	DO3	25	—	GND	45	—	NC	65	I	WE	85	—	NC
6	O	DO4	26	—	GND	46	—	NC	66	—	GND	86	—	NC
7	O	DO5	27	—	Vcc	47	—	NC	67	I	DIN7	87	—	NC
8	O	DO6	28	—	Vcc	48	—	Vcc	68	I	DIN6	88	—	NC
9	O	DO7	29	—	NC	49	—	Vcc	69	I	DIN5	89	—	NC
10	—	GND	30	—	NC	50	—	GND	70	I	DIN4	90	—	NC
11	I	OE	31	—	NC	51	—	GND	71	I	DIN3	91	—	NC
12	I	CKR	32	—	NC	52	I	WFSEL	72	I	DIN2	92	—	NC
13	I	RS	33	—	NC	53	—	GND	73	I	DIN1	93	—	NC
14	I	RFSH	34	—	NC	54	—	GND	74	I	DIN0	94	—	NC
15	—	Vcc	35	—	NC	55	—	GND	75	—	Vcc	95	—	NC
16	I	RA0	36	—	NC	56	—	GND	76	—	Vcc	96	—	NC
17	I	RA1	37	—	NC	57	I	WA3	77	—	GND	97	—	NC
18	I	RA2	38	—	NC	58	I	WA2	78	—	GND	98	—	GND
19	I	RA3	39	—	NC	59	I	WA1	79	—	NC	99	—	Vcc
20	—	GND	40	—	NC	60	I	WA0	80	—	NC	100	—	GND

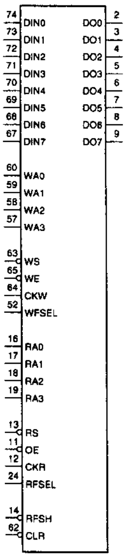

DIN0 - DIN7 ; DATA INPUTS
DO0 - DO7 ; DATA OUTPUTS
CKR ; READ CLOCK INPUT
CKW ; WRITE CLOCK INPUT
CLR ; RESET INPUT
OE ; OUTPUT ENABLE INPUT
RA0 - RA3 ; READ ADDRESS INPUT
RFSEL ; READ FIELD SELECT INPUT
RFSH ; REFRESH CONTROL INPUT
RS ; READ ADDRESS STOROBE INPUT
WA0 - WA3 ; WRITE ADDRESS INPUTS
WE ; WRITE ENABLE INPUT
WFSEL ; WRITE FIELD SELECT INPUT
WS ; WRITE ADDRESS STOROBE INPUT

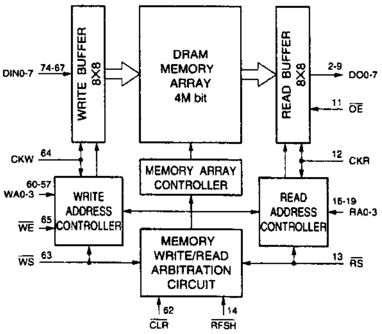

UPD482445LGW-B10-E2 (NEC)

C-MOS 4M-BIT DUAL PORT GRAPHICS BUFFER
-TOP VIEW-

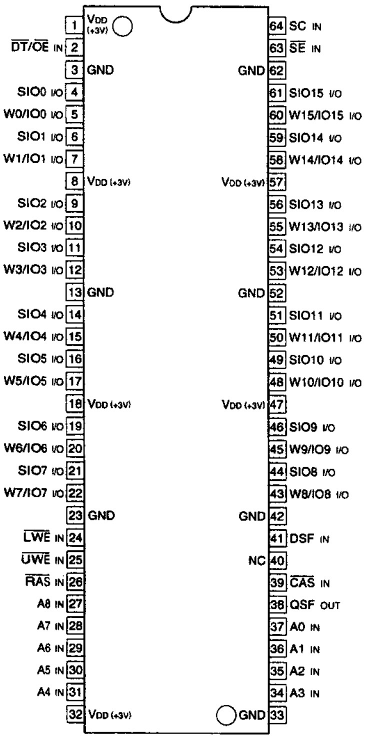

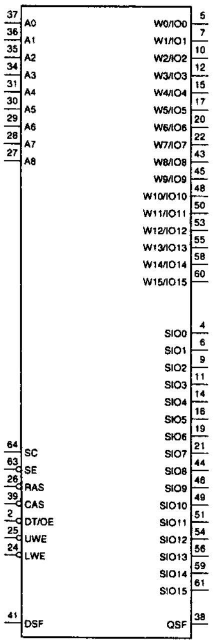

A0-A8 ; ADDRESS INPUTS
CAS ; COLUMN ADDRESS STROBE INPUT
DSF ; SPECIAL FUNCTION ENABLE INPUT
DT ; DATA TRANSFER
OE ; OUTPUT ENABLE INPUT
QSF ; SPECIAL FUNCTION OUTPUT
RAS ; ROW ADDRESS STROBE INPUT
SC ; SERIAL CLOCK INPUT
SE ; SERIAL DATA INPUT/OUTPUT ENABLE INPUT
SIO0-SIO15 ; SERIAL DATA INPUTS/OUTPUTS
UWE ; WRITE BAR BIT
LWE ; WRITE ENABLE INPUT
W0-W15/ IO0-IO15 ; DATA INPUTS/OUTPUTS

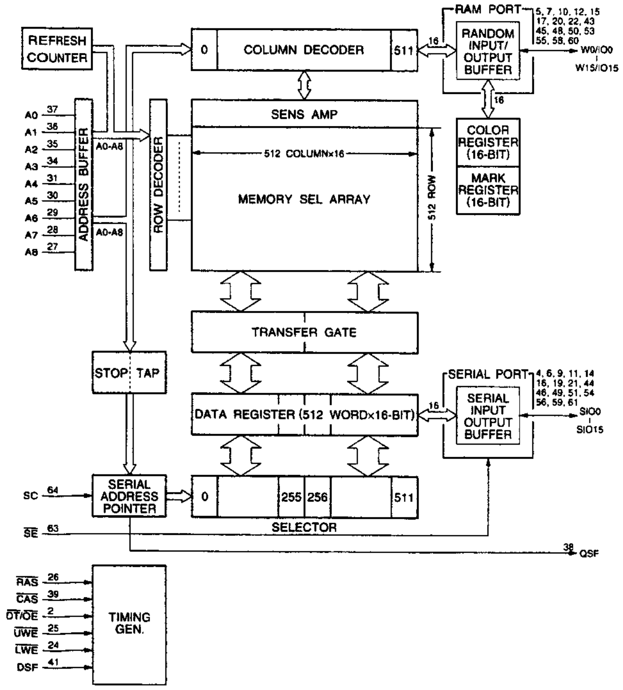

UPD6453GT-635-E2 (NEC)FLAT PACKAGE

C-MOS ON-SCREEN CHARACTER DISPLAY

—TOP VIEW—

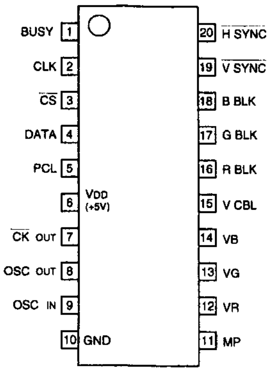

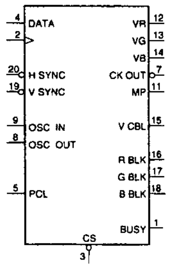

INPUT

CLK	;	CLOCK
CS	;	CHIP SELECT
DATA	;	SERIAL DATA
H SYNC	;	HORIZONTAL SYNC
OSC IN	;	OSCILLATOR IN
PCL	;	POWER ON CLEAR
V SYNC	;	VERTICAL SYNC

OUTPUT

BBLK, RBLK, GBLK	;	B, R, G, BLANKING
BUSY	;	BUSY OUT
CK OUT	;	CLOCK
MP	;	MASK PULSE
OSC OUT	;	OSCILLATOR OUT
VR, VG, VB	;	R, G, B, CHARACTER DATA
VCBL	;	VIDEO CUT BLANKING

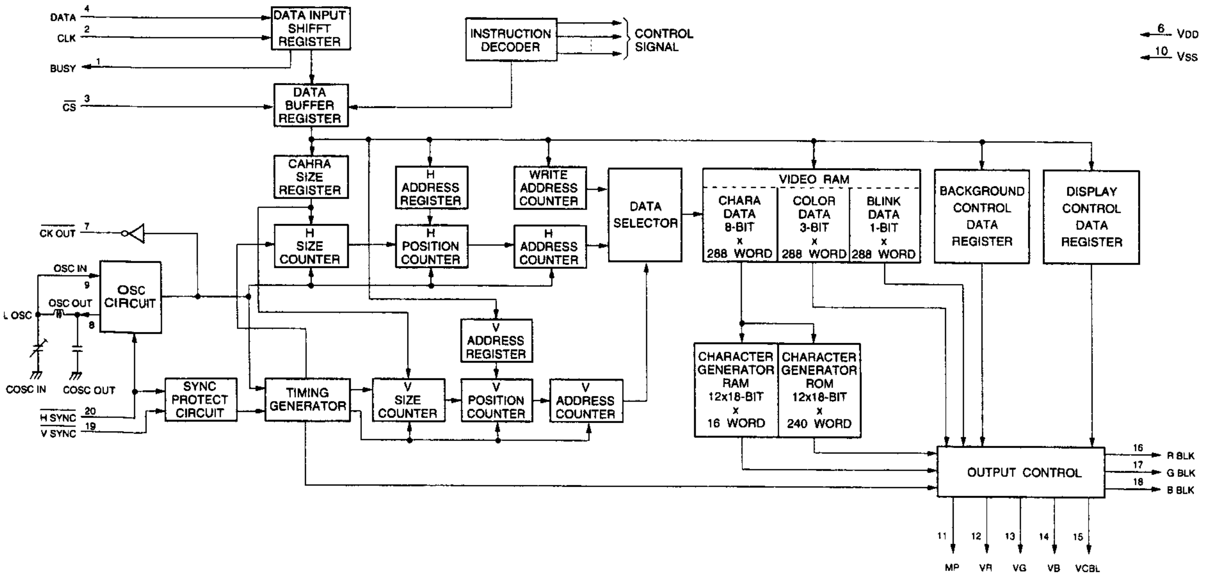

IC

BA7046F (ROHM)FLAT PACKAGE
BA7046F-E2

VIDEO SIGNAL SYNC SEPARATOR , AFC
— TOP VIEW —

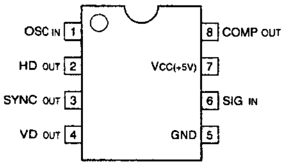

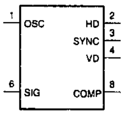

COMP ; COMPARATOR OUT
HD ; HD OUT
OSC ; OSC CONTROL IN
SIG ; VIDEO IN
SYNC ; COMP SYNC OUT
VD ; VD OUT

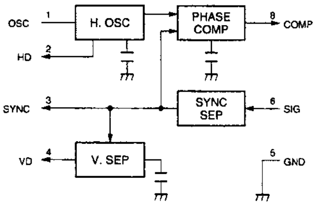

CXA1777N-T4 (SONY)FLAT PACKAGE

DUAL DIFFERENTIAL PRE-AMPLIFIER
—TOP VIEW—

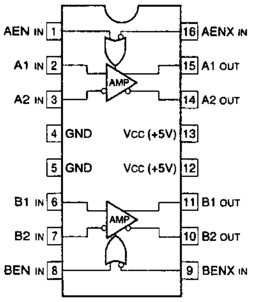

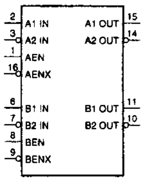

ENX	EN	OUTPUTS
0	X	OUT
X	1	OUT
1	0	HIGH-Z

0 ; LOW LEVEL
1 ; HIGH LEVEL
X ; DON'T CARE
HIGH-Z ; HIGH IMPEDANCE

CXD2131Q-T4 (SONY)

C-MOS VIDEO ADDITIONAL DATA (ASPECT RATIO IDENTIFICATION) ENCODER/DECODER
– TOP VIEW–

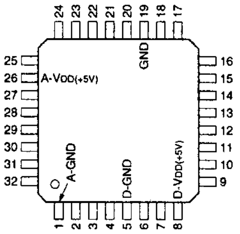

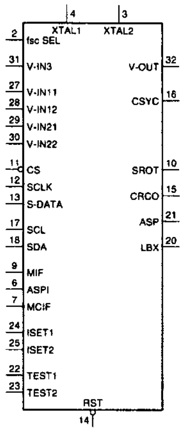

PIN NO.	I/O	SIGNAL	PIN NO.	I/O	SIGNAL
1	—	A-GND	17	I	SCL
2	I	fsc SEL	18	I/O	SDA
3	O	XTAL2	19	—	D-GND
4	I	XTAL1	20	O	LBX
5	—	D-GND	21	O	ASP
6	I	ASPI	22	I	TEST1
7	I	MCIF	23	I	TEST2
8	—	D-VDD	24	I	ISET1
9	I	MIF	25	I	ISET2
10	I/O	SROT	26	—	A-VDD
11	I	CS (overline)	27	I	V-IN11
12	I	SCLK	28	I	V-IN12
13	I	S-DATA	29	I	V-IN21
14	I	RST (overline)	30	I	V-IN22
15	O	CRCO	31	I	V-IN3
16	O	CSYC	32	O	V-OUT

INPUT

ASPI ; ASPECT SELECT (H = 16 : 9, L = 4 : 3)
CS (overline) ; CHIP SELECT
fsc SEL ; fsc/4fsc SELECT
ISET1, ISET2 ; ANALOG BIAS CURRENT SETTING
MCIF ; MICROCOMPUTER INTERFACE SELECT (L = I²C, H = SERIAL)
MIF ; MICROCOMPUTER INTERFACE SELECT (L = EXIST, H = NONE)
RST (overline) ; RESET
SCL ; I²C BUS CLOCK
SCLK ; CLOCK
S-DATA ; SERIAL DATA
TEST1, TEST2 ; FOR TEST
V-IN11 ; SYNC SEP INPUT
V-IN12 ; DECODE DATA SLICER INPUT
V-IN21 ; SYNC SEP INPUT
V-IN22 ; DECODE DATA SLICER INPUT
V-IN3 ; ENCODE INPUT
XTAL1 ; CRYSTAL OSCILLATOR

OUTPUT

ASP ; ASPECT (H = 16 : 9, L = 4 : 3)
CRCO ; CRCC CHECK MONITORING
CSYC ; COMPOSITE SYNC MONITORING
LBX ; LETTER BOX (H = LETTER BOX, L = NORMAL)
V-OUT ; ENCODE OUTPUT
XTAL2 ; CRYSTAL OSCILLATOR

INPIUT/OUTPUT

SDA ; I²C BUS DATA
SROT ; SERIAL INTERFACE OUTPUT TO THE MICROCOMPUTER

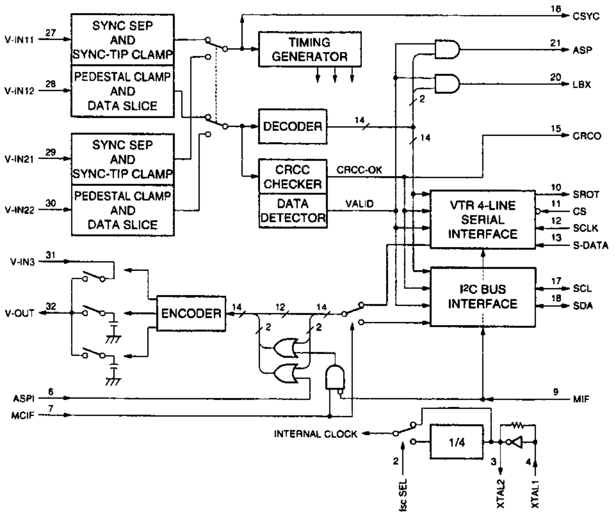

CXD2193AR-ER (SONY)

C-MOS AFC FOR SYNC SIGNAL

–TOP VIEW–

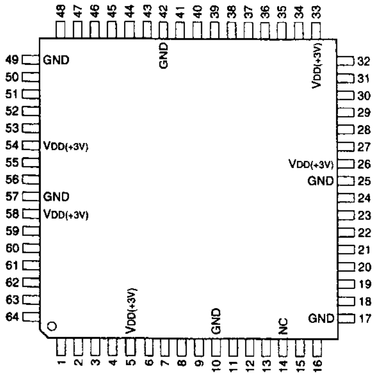

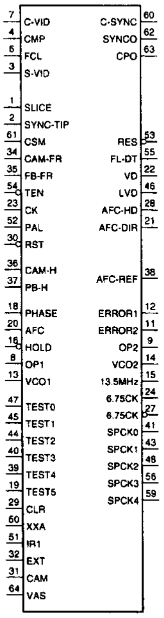

INPUT

AFC	; AFC LOCK PHASE ADJUSTMENT INPUT
CAM	; CAMERA/LINE SELECT INPUT (H = CAMERA, L = LINE)
CAM-FR	; FRAME SIGNAL IN CAMERA INPUT MODE
CAM-H	; H SYNC INPUT IN CAMERA INPUT MODE
CK	; MASTER CLOCK INPUT (6.75MHz)
CLR	; DIRECT CLEAR INPUT
CMP	; SLICE LEVEL OF THE FEEDBACK CLAMP SYSTEM
CSM	; ABNORMAL SIGNAL COMPENSATOR ON/OFF (H = ON, L = OFF)
C-VID	; VIDEO INPUT OF THE FEEDBACK CLAMP SYSTEM
EXT	; EXTERNAL/INTERNAL SELECT INPUT (H = EXT, L = INT)
FB-FR	; FRAME SIGNAL IN NORMAL PB MODE
FCL	; SYNC-TIP LEVEL OF THE FEEDBACK CLAMP SYSTEM
HOLD	; AFC ERROR HOLD INPUT (L = ERROR HOLD)
OP1	; OPERATIONAL AMPLIFIER INPUT
PAL	; SYSTEM SELECT INPUT (H = PAL, L = NTSC)
PB-H	; H SYNC INPUT IN NORMAL PB MODE
PHASE	; AFC PHASE ADJUST INPUT
RST	; AFC RESET INPUT (L = RESET)
S-VID	; VIDEO INPUT OF THE SYNC CLAMP SYSTEM
SLICE	; SLICE LEVEL OF THE SYNC CLAMP SYSTEM
SYNC-TIP	; SYNC-TIP LEVEL OF THE SYNC CLAMP SYSTEM
TEN	; V SYNC ADJUST INPUT
VAS	; V SYNC ADJUST INPUT
VCO1	; VCO INPUT

OUTPUT

13.5MHz	; 13.5MHz OUTPUT
6.75CK	; 6.75MHz OUTPUT
AFC-HD	; HD FROM THE AFC OUTPUT
AFC-REF	; AFC REFERENCE OUTPUT
C-SYNC	; SEPARATED SYNC OUTPUT OF THE SYNC CLAMP SYSTEM
ERROR1	; AFC MAIN LOOP PHASE ERROR OUTPUT
ERROR2	; AFC SUB LOOP PHASE ERROR OUTPUT
FL-DT	; ODD/EVEN DETECTED OUTPUT (H = 1st and 3rd FIELDS)
LVD	; VERTICAL SYNC OUTPUT (FOR NO SIGNAL DETECTION)
OP2	; OPERATIONAL AMPLIFIER OUTPUT
RES	; V SYNC LPF OUTPUT (FOR TEST)
SPCK1 - SPCK4	; 13.5MHz OUTPUT
SYNCO	; SEPARATED SYNC OUTPUT (FOR TEST)
VCO2	; VCO OUTPUT
VD	; DETECTED VERTICAL SYNC OUTPUT

INPUT/OUTPUT

AFC-DIR	; AFC DIRECT (FOR TEST)
CPO	; SYNC CLAMP MONITORING TERMINAL
IR1	; FOR TEST
XXA	; FOR TEST

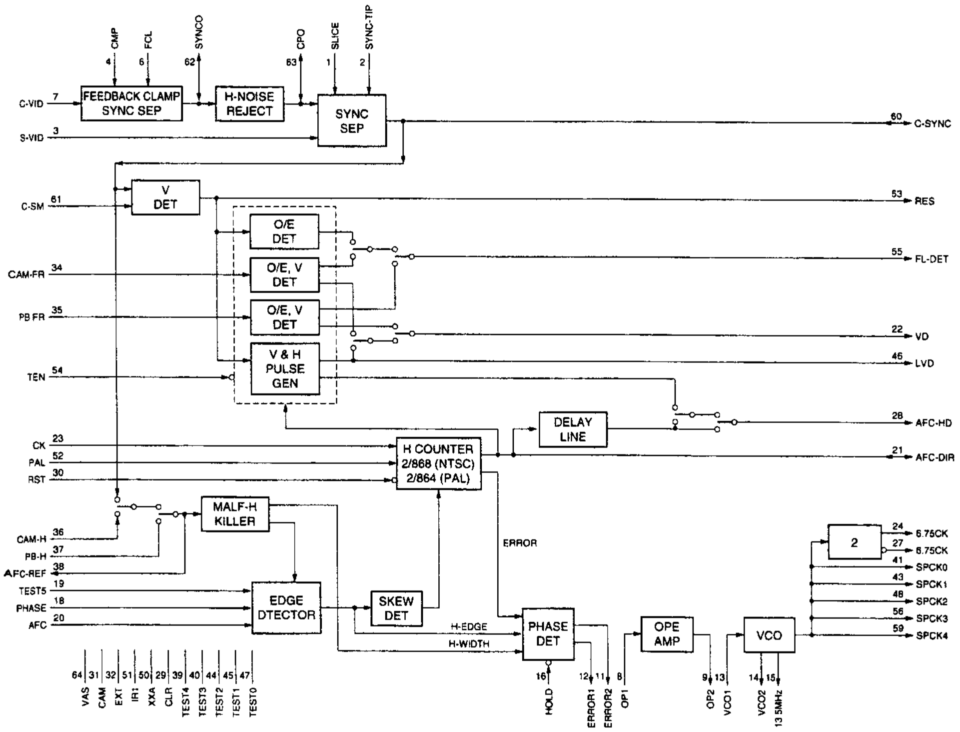

CXD2208Q (SONY)

C-MOS Y/C SEPARATOR/CLOCK GENERATOR

- TOP VIEW-

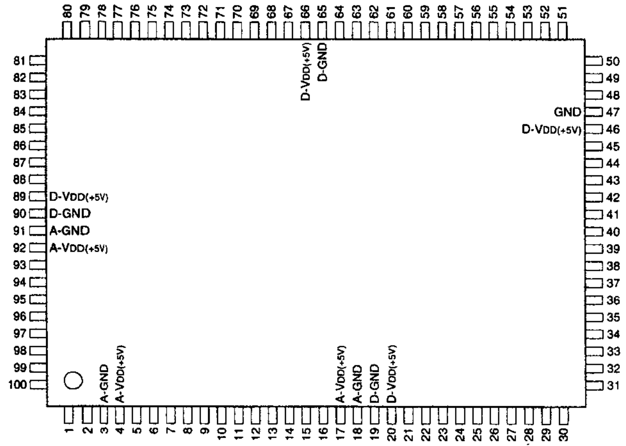

PIN NO.	I/O	SIGNAL	PIN NO.	I/O	SIGNAL	PIN NO.	I/O	SIGNAL
1	I	V2E	35	O	VISC	69	I	DATA
2	I	V1E	36	O	CBLK	70	I	STB
3	—	A-GND	37	O	ACP	71	I	SCLK
4	—	A-VDD(+5V)	38	I	NS2	72	O	CCLP
5	I	RH3	39	I	NS1	73	O	IDW
6	I	RL3	40	I	NS0	74	O	FPO1
7	I	YDO	41	I	$\overline{\text{RST}}$	75	O	FPO2
8	I	CDO	42	I	MD4	76	I	FPI1
9	I	V1A	43	I	MD3	77	I	FPI2
10	I	V2A	44	I	MD2	78	O	EYDO
11	I	NRA	45	I	MD1	79	O	ECDO
12	I	BST	46	—	D-VDD(+5V)	80	I	SD2
13	I	PCR	47	—	D-GND	81	I	SD1
14	I	RL1	48	O	WZR	82	I	SD0
15	I	RH1	49	O	RZR	83	O	FPR
16	I	BC1	50	O	RCK	84	O	CHS
17	—	A-VDD(+5V)	51	I	DRC	85	O	HLD
18	—	A-GND	52	O	RC1	86	O	CSY2
19	—	D-GND	53	I	DRZ	87	I	A-TEST
20	—	D-VDD(+5V)	54	O	RZ1	88	I	D-TEST
21	O	CSY1	55	I	CRF	89	—	D-VDD(+5V)
22	O	BW	56	O	YCLP	90	—	D-GND
23	O	HAF	57	O	YBLK	91	—	A-GND
24	O	BF0	58	O	YRFS	92	—	A-VDD(+5V)
25	O	PED	59	O	CRFS	93	I	BC2
26	O	SMP	60	O	O/E	94	I	RL2
27	O	STUP	61	O	SVRF	95	I	RH2
28	I	WCK	62	O	LN12	96	I	WD2
29	I	PH0	63	O	HLFH	97	I	WD1
30	I	PH1	64	I	STD	98	I	SCH
31	I	LLT	65	—	D-GND	99	I	NRE
32	O	COL	66	—	D-VDD(+5V)	100	I	CDC
33	O	BPF	67	I	X1			
34	O	HBLK	68	O	X2			

INPUT

A-TEST ; ANALOG NODE TEST
BC1, BC2 ; BIAS CURRENT
BST ; BURST
CDC ; SLICE LEVEL
CDO ; C DROPOUT PULSE
CLR ; RESET (L : RESET)
CRF ; EXTERNAL C-REFERENCE SYNC
DATA ; SERIAL DATA
DRC ; 32 nSec DELAYED READ CLOCK (PAL ONLY)
DRZ ; 100 nSec DELAYED READ CLOCK
D-TEST ; DIGITAL MODE TEST
FPI1, FPI2 ; DETECTED COLOR FRAME ID
LLT ; LALT
MD1, MD2 ; VIDEO MODE SELECT
MD3, MD4 ; SIGNAL MODE SELECT
NRA ; INTEGRATOR FOR REJECTING THE SPIKE NOISE ON THE SEPARATED SYNC
NRE ; INTEGRATOR FOR REJECTING THE SPIKE NOISE ON THE SEPARATED SYNC
NS0 - NS2 ; TEST SIGNAL FOR THE DIGITAL TEST MODE
PCR ; EXTERNAL CR FOR DESIGNATING THE SAMPLING PULSE WIDTH
PH0 ; 1/2 WCK (2fsc)
PH1 ; 1/4 WCK (fsc)
RH1 - RH3 ; REFERENCE VOLTAGE (+1.8V)
RL1 - RL3 ; REFERENCE VOLTAGE (+1.7V)
SCH ; DETECTED SC/H VOLTAGE
SCLK ; SERIAL DATA CLOCK
SD0 - SD2 ; COLOR FRAMING PHASE ADJUSTMENT
STB ; SERIAL DATA STROBE
STD ; STANDARD MODE SIGNAL FROM THE SYSTEM CONTROLLER
V1A ; VIDEO SIGNAL FOR CLAMP PULSE GENERATION
V2A ; VIDEO SIGNAL FOR SYNC SEPARATION
V1E ; SELECT Y SIGNAL FOR CLAMP PULSE GENERATION
V2E ; SELECT Y SIGNAL FOR SYNC SEPARATION
WCK ; WRITE CLOCK (4fsc)
WD1 ; LOWER WINDOW VOLTAGE FOR THE COLOR FRAMING DETECTOR
WD2 ; UPPER WINDOW VOLTAGE FOR THE COLOR FRAMING DETECTOR
X1 ; EXTERNAL CRYSTAL OSCILLATOR
YDO ; Y DROPOUT PULSE

OUTPUT

ACP ; SYNC-TIP CLAMP PULSE
BF0 ; BURST GATE PULSE
BPF ; L : BAND-PASS FILTER MODE PERIOD
BW ; H : B/W, L : COLOR
CBLK ; BLANKING
CCLP ; CTDM CLAMP PULSE
CHS ; CHARGE START OF COLOR FRAMING DETECTION
COL ; H : COLOR PERIOD, L : B/W PERIOD (ALWAYS "H" IN S-VIDEO MODE)
CRFS ; C REFERENCE SYNC GENERATION SIGNAL
CSY1, CSY2 ; SEPARATED SYNC
ECDO ; C DROPOUT
EYDO ; Y DROPOUT
FPO1 ; FP1 OR CTDM FP1 OUTPUT
FPO2 ; FP2 OR CTDM FP2 OUTPUT
FPR ; FIELD PULSE GENERATOR RESET PULSE
HAF ; HALF H PULSE
HBLK ; H SYNC TIMING PULSE
HLD ; SAMPLING PULSE FOR THE COLOR FRAMING DETECTOR
HLFH ; FRONT HALF AND BACK HALF OF EACH LINE (L : FRONT HALF)
IDW ; CTDM CF-ID WINDOW
LN12 ; L : 12 LINES PERIOD
O/E ; ODD/EVEN (H : EVEN, L : ODD)
PED ; PEDESTAL SAMPLING PULSE
RC1 ; READ CLOCK FOR DELAYING IT FOR 35 ns
RCK ; READ CLOCK
RZ1 ; READ CLOCK FOR DELAYING IT FOR 100 ns
RZR ; READ ZERO
SMP ; SAMPLING PULSE
STUP ; CAV Y SETUP PULSE
SVRF ; SERVO REFERENCE
VISC ; SYSTEM CONTROLLER OPERATION STATUS
WZR ; WRITE ZERO
X2 ; EXTERNAL CRYSTAL OSCILLATOR
YBLK ; Y BLANKING PULSE
YCLP ; SELECT Y CLAMP
YRFS ; Y REFERENCE SYNC GENERATION SIGNAL

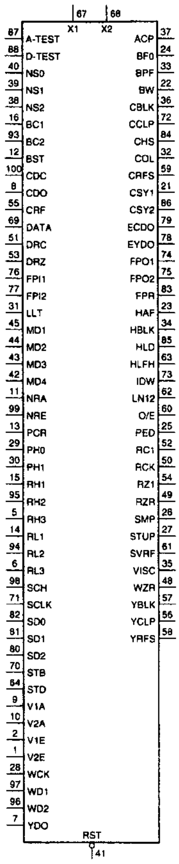

CXD2310AR-T4 (SONY)

C-MOS 10-BIT 20MSPS VIDEO A/D CONVERTER

—TOP VIEW—

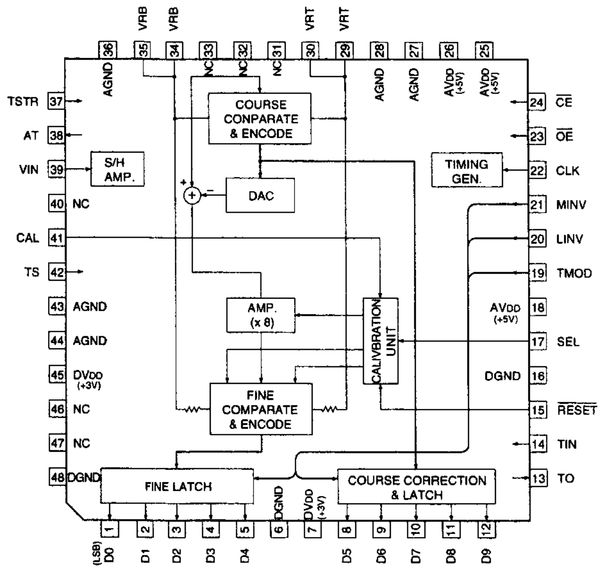

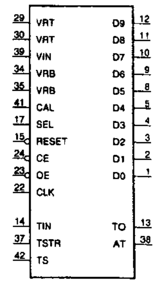

INPUT

CAL ; CALIBRATION PULSE INPUT
CE ; CHIP ENABLE
CLK ; CLOCK
LINV ; OUTPUT (D0-D8) INVERSION
MINV ; OUTPUT (D9) INVERSION
OE ; DIGITAL DATA OUTPUT ENABLE
RESET ; CALIBRATION CIRCUIT RESET
SEL ; OUTPUT DATA (D5-D9) SELECT FOR CALIBRATION (4-CLOCK)
HIGH; THROUGH OUTPUT, LOW; DATA FIXED AS WITH D0-D4
TIN ; TEST SIGNAL INPUT
TMOD ; TEST MODE
TS ; TEST SIGNAL INPUT
TSTR ; TEST SIGNAL INPUT
VRB ; REFERENCE BOTTOM VOLTAGE
VRT ; REFERENCE TOP VOLTAGE

OUTPUT

AT ; TEST SIGNAL OUTPUT
D0-D9 ; DIGIRAL DATA OUTPUT
TO ; TEST PIN

CXD8243AM (SONY)FLAT PACKAGE
CXD8243AM-ER

C-MOS DIGITAL YC SEPARATOR/DECODER/CTDM CLOCK GENERATOR

—TOP VIEW—

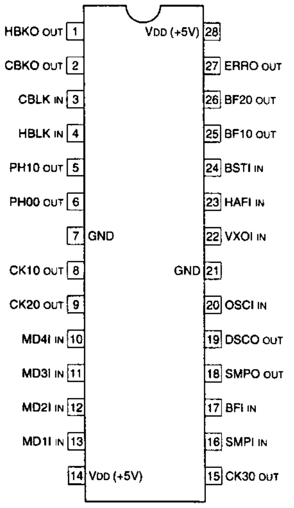

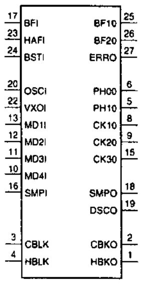

(*1) SYSTEM SELECT

MD1I	MD2I	MODE
0	0	PAL
0	1	SECAM
1	0	PAL-M
1	1	NTSC

(*2) SIGNAL FORMAT SELECT

MD3I	MD4I	MODE
0	0	COMPONENT
0	1	CTDM
1	0	COMPOSITE
1	1	S-VIDEO

0 ; LOW LEVEL
1 ; HIGH LEVEL

INPUT

BFI ; BURST FLAG
BSTI ; BURST FOR PHASE COMPARISON
CBLK ; CHROMA BLANKING PULSE
HAFI ; TRIGGER PULSE FOR BURST SAMPLING
HBLK ; H BLANKING PULSE
MD1I, MD2I ; SYSTEM SELECT (*1)
MD3I, MD4I ; SIGNAL FORMAT SELECT (*2)
OSCI ; H LOCK LOOP VCO
SMPI ; TRAPEZOID SAMPLING PULSE OF THE H LOCK LOOP
VXOI , BURST LOCK LOOP VCXO

OUTPUT

BF10, BF20 ; BURST FLAG
CBKO ; CHROMA BLANKING PULSE
CK10 - CK30 ; CLOCK, SELECTED BY MODE
DSCO ; TRAPEZOID GENERATOR DISCHARGE PULSE
ERRO ; BURST PHASE COMPARISON ERROR
HBKO ; H BLANKING PULSE
PH00 ; 2fsc
PH10 ; fsc
SMPO ; TRAPEZOID SAMPLING PULSE OF THE H LOCK LOOP

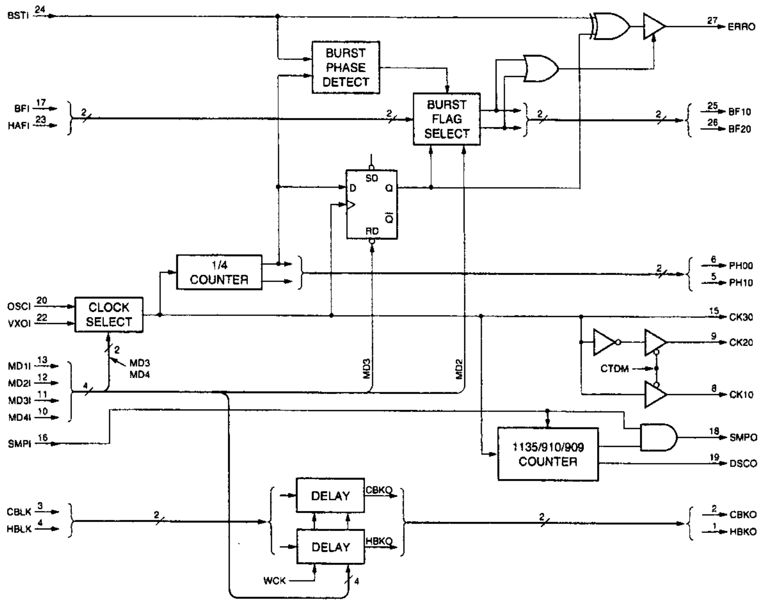

CXD8161AQ (SONY)FLAT PACKAGE

C-MOS DIGITAL Y/C SEPARATOR & CHROMA DECODER

—TOP VIEW—

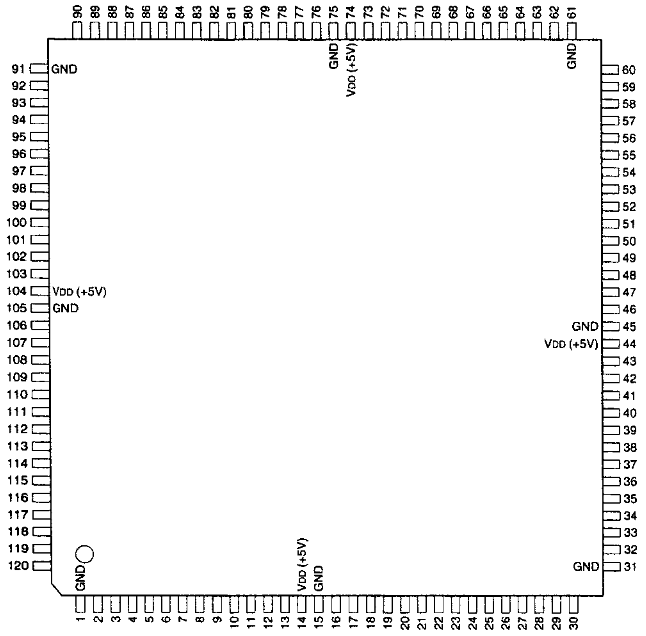

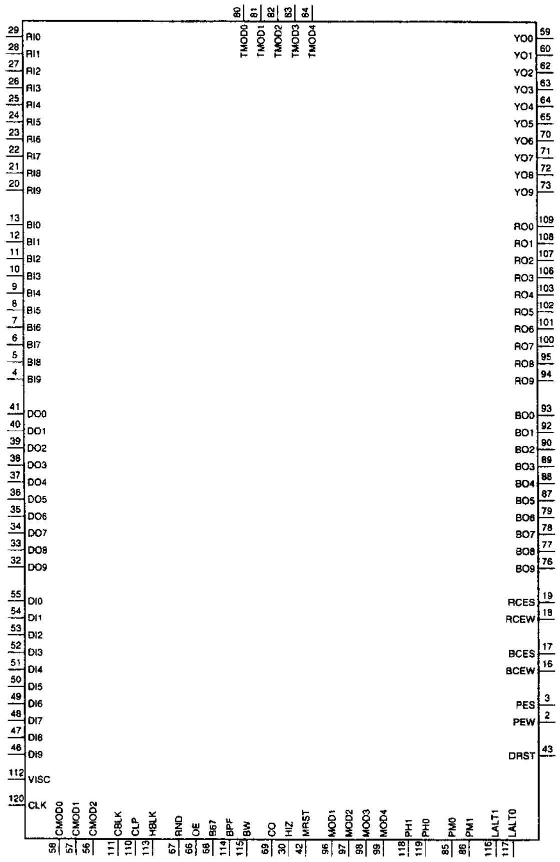

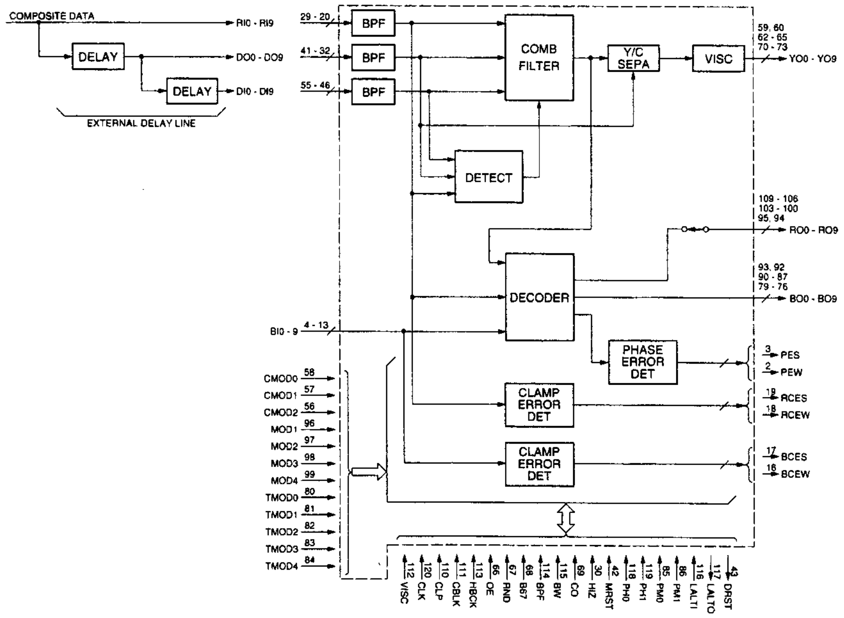

CXD8969AR (SONY)

(VDD = +5V)

PIN NO.	I/O	SIGNAL	PIN NO.	I/O	SIGNAL	PIN NO.	I/O	SIGNAL	PIN NO.	I/O	SIGNAL
1	—	GND	31	—	GND	61	—	GND	91	—	GND
2	O	PEW	32	I	DO9	62	O	YO2	92	O	BO1
3	O	PES	33	I	DO8	63	O	YO3	93	O	BO0
4	I	BI9	34	I	DO7	64	O	YO4	94	O	RO9
5	I	BI8	35	I	DO6	65	O	YO5	95	O	RO8
6	I	BI7	36	I	DO5	66	I	OE	96	I	HOD1
7	I	BI6	37	I	DO4	67	I	RND	97	I	HOD2
8	I	BI5	38	I	DO3	68	I	B67	98	I	HOD3
9	I	BI4	39	I	DO2	69	I	CO	99	I	HOD4
10	I	BI3	40	I	DO1	70	O	YO6	100	O	RO7
11	I	BI2	41	I	DO0	71	O	YO7	101	O	RO6
12	I	BI1	42	I	MRST	72	O	YO8	102	O	RO5
13	I	BI0	43	O	DRST	73	O	YO9	103	O	RO4
14	—	VDD	44	—	VDD	74	—	VDD	104	—	VDD
15	—	GND	45	—	GND	75	—	GND	105	—	GND
16	O	BCEW	46	I	DI9	76	O	BO9	106	O	RO3
17	O	BCES	47	I	DI8	77	O	BO8	107	O	RO2
18	O	RCEW	48	I	DI7	78	O	BO7	108	O	RO1
19	O	RCES	49	I	DI6	79	O	BO6	109	O	RO0
20	I	RI9	50	I	DI5	80	I	TMOD0	110	I	CLP
21	I	RI8	51	I	DI4	81	I	TMOD1	111	I	CBLK
22	I	RI7	52	I	DI3	82	I	TMOD2	112	I	YISC
23	I	RI6	53	I	DI2	83	I	TMOD3	113	I	HBLK
24	I	RI5	54	I	DI1	84	I	TMOD4	114	I	BPF
25	I	RI4	55	I	DI0	85	I	PM0	115	I	BW
26	I	RI3	56	I	CMOD2	86	I	PM1	116	I	LALTI
27	I	RI2	57	I	CMOD1	87	O	BO5	117	O	LALTO
28	I	RI1	58	I	CMOD0	88	O	BO4	118	I	PH1
29	I	RI0	59	O	YO0	89	O	BO3	119	I	PH0
30	I	HIZ	60	O	YO1	90	O	BO2	120	I	CLK

INPUT

B67 ; CORRELATION DETECT SENSITIVITY SELECT
(H ; 6 BITS/L ; 7 BITS)
BI0 - BI9 ; B-Y DATA (COMPONENT MODE)
BPF ; L ; BAND PASS FILTER SELECT
BW ; COMPOSITE SIGNAL THROUGH OUT CONTROL
CBLK ; CHROMA BLANKING PULSE
CLK ; CLOCK
CLP ; CLAMP PULSE
*1) CMOD0 - CMOD2 ; Y/C CORRECATION MODE SELECT
CO ; CHROMA DECODE CONTROL
DI0 - DI9 ; 2H DELAY DATA (COMPOSITE MODE) FOR NTSC
4H DELAY DATA (COMPOSITE MODE) FOR PAL/PAL-M
DO0 - DO9 ; 1H DELAY DATA (COMPOSITE MODE) FOR NTSC
2H DELAY DATA (COMPOSITE MODE) FOR PAL/PAL-M
HBLK ; H BLANKING PULSE
HIZ ; PULSE CONTROL
LALTI ; LINE ALTERNATE
*2) MODE1 - MODE4 ; MODE SELECT
MRST ; RESET
OE ; OUTPUT ENABLE
PH0, PH1 ; REFERENCE PHASE FOR CHROMA DECODE AND
VLSC GENERATION
PM0, PM1 ; PHASE SHIFT CONTROL
RI0 - RI9 ; COMPOSITE DATA (COMPOSITE MODE)
R-Y DATA (COMPONENT MODE)
CHROMA DATA (CHROMA MODE)
RND ; OUTPUT ROUND OFF SELECT
TMOD0 - TMOD4 ; TEST MODE/BPF STAGE SELECT
VISC , VIRTICAL INTERVAL SUB-CARRIER CONTROL

OUTPUT

BCES ; B-Y CLAMP ERROR SENSE
BCEW ; B-Y CLAMP ERROR WIDTH
BO0 - BO9 ; B-Y DATA (B09 ; MSB)
DRST ; EXTERNAL DELAY LINE RESET
LALTO ; LINE ALTERNATE
PES ; PHASE ERROR SENSE
PEW ; PHASE ERROR WIDTH
RCES ; R-Y CLAMP ERROR SENSE
RCEW ; R-Y CLAMP ERROR WIDTH
RO0 - RO9 ; R-Y DATA (RO9 ; MSB)
YO0 - YO9 ; Y DATA (YO9 ; MSB)

*1)

CMOD2	CMOD1	CMOD0	MODE
0	0	0	0-1 FIX
0	0	1	1-2 FIX
0	1	0	0-1-2 FIX
0	1	1	BPF FIX
1	0	0	0-1/1-2/0-1 ADAPTIVE
1	0	1	0-1/1-2/1-2 ADAPTIVE
1	1	0	0-1/1-2/0-1-2 ADAPTIVE
1	1	1	0-1/1-2/0-1 BPF ADAPTIVE

0 ; LOW LEVEL
1 ; HIGH LEVEL

0-1 ; UPPER 2 LINE COMB FILTER
1-2 , LOWER 2 LINE COMB FILTER
0-1-2 ; UPPER/LOWER 3 LINE COMB FILTER

*2)

MODE2	MODE1	MODE
0	0	PAL
0	1	PAL-M
1	0	SECAM
1	1	NTSC
MODE4	MODE3	MODE
0	0	COMPONENT
0	1	COMPOSITE
1	0	CTDM
1	1	CHROMA

0 , LOW LEVEL
1 ; HIGH LEVEL

C-MOS SDDI INTERFACE (GATE ARRAY)

- TOP VIEW -

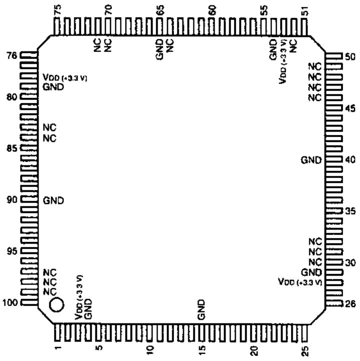

(VDD = +3.3 V)

PIN No.	I/O	SIGNAL	PIN No.	I/O	SIGNAL	PIN No.	I/O	SIGNAL	PIN No.	I/O	SIGNAL	PIN No.	I/O	SIGNAL
1	I	REFF	21	I	CADRS4	41	O	DOUT5	61	I	APDEP2	81	I	SOPMD
2	I	RST	22	I	CADRS5	42	O	DOUT6	62	O	ADEN2	82	I	CIFMD
3	—	VDD	23	I	CADRS6	43	O	DOUT7	63	O	AINT2	83	—	NC
4	—	GND	24	I	CADRS7	44	O	DOUT8	64	—	NC	84	—	NC
5	I/O	SYSIO0	25	O	SYSF	45	O	DOUT9	65	—	GND	85	I	DIN0
6	I/O	SYSIO1	26	O	SYSH	46	—	NC	66	O	SUOP1	86	I	DIN1
7	I/O	SYSIO2	27	O	SYSV	47	—	NC	67	O	SUOP0	87	I	DIN2
8	I/O	SYSIO3	28	—	VDD	48	—	NC	68	I	SUIP1	88	I	DIN3
9	I/O	SYSIO4	29	—	GND	49	—	NC	69	I	SUIP0	89	I	DIN4
10	I/O	SYSIO5	30	—	NC	50	O	PCERD	70	—	NC	90	—	GND
11	I/O	SYSIO6	31	—	NC	51	O	SWDET	71	—	NC	91	I	DIN5
12	I/O	SYSIO7	32	—	NC	52	—	NC	72	O	TP4	92	I	DIN6
13	I	STAT1	33	I	OENBL	53	—	VDD	73	O	TP3	93	I	DIN7
14	I	CCS	34	O	PRTYO	54	—	GND	74	O	TP2	94	I	DIN8
15	—	GND	35	O	DOUT0	55	I	APDEP0	75	O	TP1	95	I	DIN9
16	I	STAT0	36	O	DOUT1	56	O	ADEN0	76	O	TP0	96	I	PRTYI
17	I	STRB	37	O	DOUT2	57	O	AINT0	77	I	TEST	97	—	NC
18	I	CADRS1	38	O	DOUT3	58	I	APDEP1	78	—	VDD	98	—	NC
19	I	CADRS2	39	O	DOUT4	59	O	ADEN1	79	—	GND	99	—	NC
20	I	CADRS3	40	—	GND	60	O	AINT1	80	I	CK	100	I	REFH

INPUT

APDEP0 - APDEP2 ; CH-0, 1, 2 DATA END
CADRS1 - CADRS7 ; ADDRESS
CCS ; CHIP SELECT
CIFMD ; CPU I/F MODE SETTING
CK ; SYSTEM CLOCK
DIN0 - DIN9 ; PARALLEL DATA
OENBL ; DIN0 - DIN9 OUTPUT ENABLE
PRTYI ; DIN0 - DIN9 PARITY
REFF ; REFERENCE FRAME
REFH ; REFERENCE H
RST ; SYSTEM RESET
SOPMD ; TX/RX MODE SETTING
STAT0, STAT1 ; BUS STATUS 0, 1
STRB ; STROBE
SUIP0, SUIP1 ; INPUT PORT 0, 1
TEST ; TEST FOR IC (GND CONNECT)

OUTPUT

ADEN0 - ADEN2 ; CH-0, 1, 2 DATA ENABLE
AINT0 - AINT2 ; CH-0, 1, 2 INTERRUPT
DOUT0 - DOUT9 ; PARALLEL DATA
PCERD ; PAYLOAD CRCC ERROR DETECT
PRTYO ; DOUT0 - DOUT9 PARITY
SUOP0, SUOP1 ; OUTPUT PORT 0, 1
SWDET ; SWITCHING DETECT
SYSF ; REFERENCE FRAME
SYSH ; REFERENCE H
SYSV ; V BLANKING
TP0 - TP4 , TEST POINT 0 - 4

INPUT/OUTPUT

SYSIO0 - SYSIO7 ; DATA BUS

CXD8277Q (SONY)

C-MOS DIGITAL AUDIO (AES/EBU) ENCODER
—TOP VIEW—

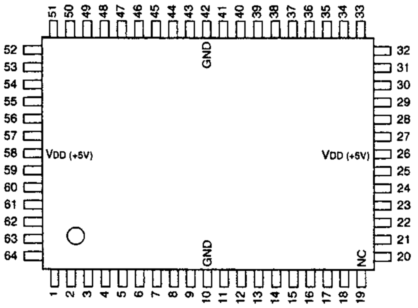

(VDD = +5V)

PIN No.	I/O	SIGNAL	PIN No.	I/O	SIGNAL	PIN No.	I/O	SIGNAL	PIN No.	I/O	SIGNAL
1	I	BIPHCLK	17	O	MONIT4	33	I	DATA6	49	I	TFSID0
2	I	LRPOLL	18	O	MONIT5	34	I	DATA7	50	I	TFSID1
3	I	LRCKO	19	—	NC	35	I	WR	51	I	TFSID2
4	I	BCKPOLL	20	I	AD0	36	I	CS	52	I	RESET
5	I	BCKO	21	I	AD1	37	I	CPU AUTO	53	I	CSEL
6	I	TDATAI	22	I	AD2	38	I	TBITLN0	54	I	TEST0
7	I	VIN	23	I	AD3	39	I	TBITLN1	55	I	TEST1
8	I	UIN	24	I	AD4	40	I	TBITLN2	56	O	MONIT2
9	I	CIN	25	I	AD5	41	I	TMONO	57	O	MONIT3
10	—	GND	26	—	VDD	42	—	GND	58	—	VDD
11	I	TxBLKID	27	I	DATA0	43	I	TEMP0A	59	I	TEST5
12	I	BLKIDSEL	28	I	DATA1	44	I	TEMP1A	60	I	TEST2
13	I	DTMODE0	29	I	DATA2	45	I	TEMP2A	61	I	TEST3
14	I	DTMODE1	30	I	DATA3	46	I	TEMP0B	62	I	POS
15	I	DTMODE2	31	I	DATA4	47	I	TEMP1B	63	O	MONIT1
16	I	DTMODE3	32	I	DATA5	48	I	TEMP2B	64	O	TxDATA

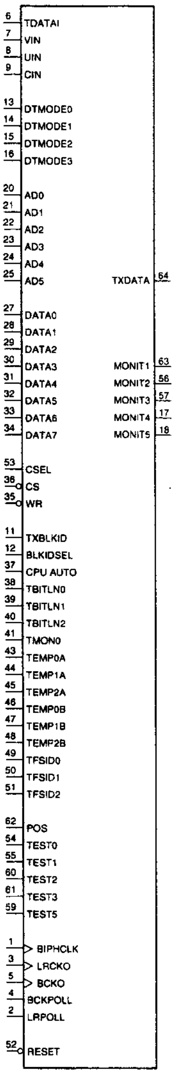

INPUT

AD0-AD5 ; ADDRESS BUS FOR WRITING CHANNEL STATUS DATA FROM EXTERNAL CPU TO CHANNEL STATUS RESISTER
BCKO ; BIT CLOCK (64Fs, 32Fs) FOR TDATAI
BCKPOLL ; POLARITY SWITCHING OF BCKO (PIN No.5)
BIPHCLK ; 128Fs FOR DO OUTPUT
BLKIDSEL ; BLOCK ID EXTERNAL/INTERNAL SELECTION ("H" : INTERNAL MODE)
CIN ; SERIAL INPUT OF EACH SUB FRAME CHANNEL STATUS
CPU AUTO ; SWITCHING SIGNAL OF CPU AND AUTO MODE ("H" : AUTO MODE)
CS ; CHIP SELECT SIGNAL FROM EXTERNAL CPU TO CHANNEL STATUS RESISTER ("L" : SELECT, "H" : UNSELECT)
CSEL ; SELECTS THE USE OF CIN (EXTERNAL INPUT) OR INTERNAL RESISTER FOR CHANNEL STATUS DATA. ("H" : INTERNAL RESISTER)
DATA0-DATA7 ; DATA BUS FOR WRITING CHANNEL STATUS DATA FROM EXTERNAL CPU TO CHANNEL STATUS RESISTER
DTMODE0-3 ; DECISION OF DIGITAL AUDIO SIGNAL INPUT FORMAT
LRCKO ; L/R CLOCK FOR DIGITAL AUDIO SIGNAL OUTPUT
LRPOLL ; POLARITY SWITCHING OF LRCKO (PIN No.3)
POS ; FORCIBLY SETS PREAMBLE TO BE POSITIVE POLARITY ("H" : ACTIVE)
RESET ; SETS TxDATA OUTPUT (AUDIO DATA, AND VALIDITY BIT, USER DATA AND CHANNEL STATUS DATA) TO BE "0". ("L" : ACTIVE)
TBITLN0-2 ; SUBFRAME A/B CHANNEL STATUS SETTING (DATA BIT LENGTH)
TDATAI ; DIGITAL AUDIO SIGNAL INPUT
TEMP0A-2A ; SUBFRAME A EMP INFORMATION
TEMP0B-2B ; SUBFRAME B EMP INFORMATION
TEST0 ; TEST RESET (CONNECTION TO GND)
TEST1 ; TEST RESET (CONNECTION TO GND)
TEST2 ; TEST
TEST3 ; TEST
TEST5 ; CONTROL SIGNAL OF MONIT1 TO 5
TFSID0-2 ; SUBFRAME A/B Fs INFORMATION
TMONO ; SUBFRAME A/B CHANNEL STATUS SETTING (MONOPHONIC/TWO CHANNEL MODE)
TxBLKID ; EXTERNAL BLOCK ID SIGNAL
UNI ; SERIAL INPUT OF EACH SUB FRAME USER DATA
VIN ; SERIAL INPUT OF EACH SUB FRAME VALIDITY BIT
WR ; CHANNEL STATUS DATA WRITING FROM EXTERNAL CPU TO CHANNELSTATUS RESISTER

OUTPUT

MONIT1-5 ; MONITOR
TxDATA ; AES/EBU FORMAT DIGITAL AUDIO OUTPUT

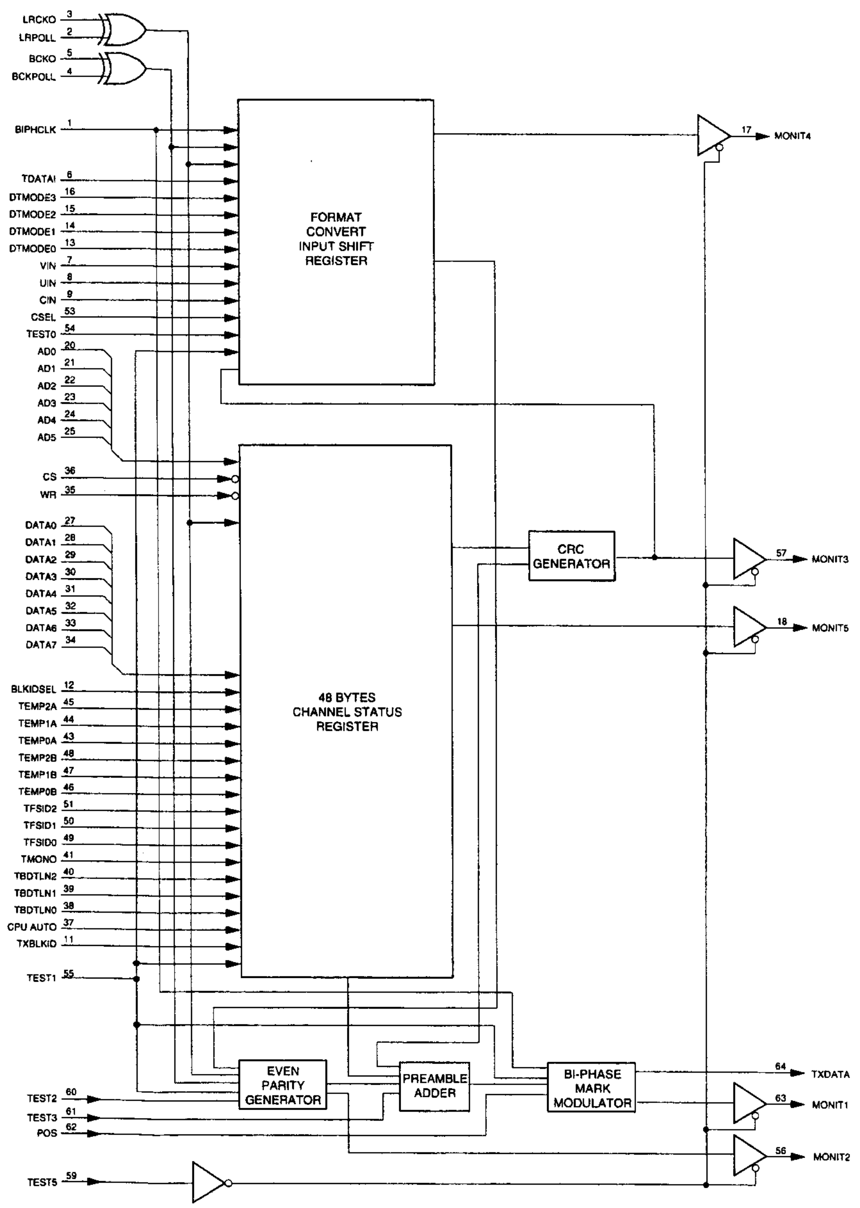
LRCKO
LRPOLL
BCKO
BCKPOLL
BIPHCLK
TDATAI
DTMODE3
DTMODE2
DTMODE1
DTMODE0
VIN
UIN
CIN
CSEL
TEST0
AD0
AD1
AD2
AD3
AD4
AD5
CS
WR
DATA0
DATA1
DATA2
DATA3
DATA4
DATA5
DATA6
DATA7
BLKIDSEL
TEMP2A
TEMP1A
TEMP0A
TEMP2B
TEMP1B
TEMP0B
TFSID2
TFSID1
TFSID0
TMONO
TBDTLN2
TBDTLN1
TBDTLN0
CPU AUTO
TXBLKID
TEST1
TEST2
TEST3
POS
TEST5
FORMAT CONVERT INPUT SHIFT REGISTER
48 BYTES CHANNEL STATUS REGISTER
CRC GENERATOR
EVEN PARITY GENERATOR
PREAMBLE ADDER
BI-PHASE MARK MODULATOR
MONIT4
MONIT3
MONIT5
TXDATA
MONIT1
MONIT2

CXD8278AQ (SONY)

C-MOS DIGITAL AUDIO SIGNAL (AES/EBU) DECODER
—TOP VIEW—

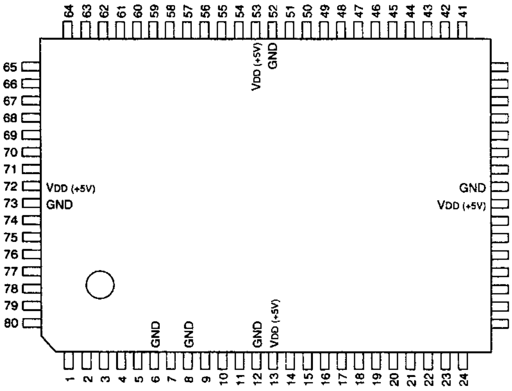

PIN NO.	I/O	SIGNAL	PIN NO.	I/O	SIGNAL	PIN NO.	I/O	SIGNAL	PIN NO.	I/O	SIGNAL
1	O	NOSGNL	21	I/O	FM12 TS4	41	I/O	RD LN2	61	I	BCKPOL
2	O	UNLOCK	22	I/O	FIXDPLLZ	42	I	CS	62	O	RXLR
3	O	SYNCERR	23	I/O	F128 TS2	43	O	INT	63	I	LRCKI
4	I	RXDATA	24	I	TST3	44	I	CPU AUTO	64	I	LRPOL
5	I	CLKIN	25	I/O	AD0 CON	45	I	TST1	65	O	RXBLKID
6	—	GND	26	I/O	AD1 NOA	46	O	SLIP0	66	O	CSAVLDTY
7	O	CLKOUT	27	I/O	AD2 FS0	47	O	SLIP1	67	O	CSBVLDTY
8	—	GND	28	I/O	AD3 FS1	48	I	DTMODE0	68	O	CRCA
9	O	FMASTER	29	I/O	AD4 FS2	49	I	DTMODE1	69	O	CRCB
10	I	PLLSEL	30	I/O	AD5 E0A	50	I	DTMODE2	70	I	MUTE0
11	O	PLLVAR	31	O	D0 E1A	51	I	DTMODE3	71	I	MUTE1
12	—	GND	32	—	VDD	52	—	GND	72	—	VDD
13	—	VDD	33	—	GND	53	—	VDD	73	—	GND
14	O	PLLREF	34	O	D1 E2A	54	O	COUT	74	I	MUTEON
15	I/O	LOCKPH0	35	O	D2 E0B	55	O	UOUT	75	O	VE3A
16	I/O	LOCKPH1	36	O	D3 E1B	56	O	VOUT	76	O	VE3B
17	I/O	LOCKPH2	37	O	D4 E2B	57	O	ERROR	77	O	VE1A
18	I/O	LOCKPH3	38	O	D5 MON	58	O	RDATA	78	O	VE1B
19	I/O	LOCKPH4	39	O	D6 LN0	59	O	RXBCK	79	O	PE1
20	I/O	LOCKPH5	40	O	D7 LN1	60	I	BCKI	80	O	PE3

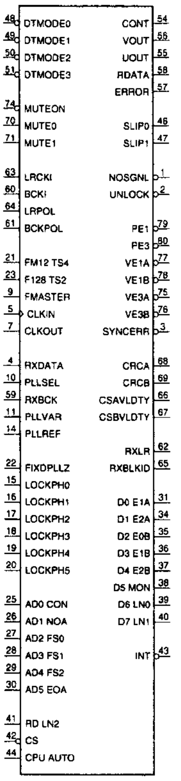

INPUT
- BCKI ; REFERENCE BIT CLOCK (64/32Fs)
- BCKPOL ; POLARITY SWITCHING SIGNAL OF BCKI (PIN NO.60) AND RXBCK (PIN NO.59)
- CLKIN ; MASTER CLOCK OSCILLATOR INPUT AT DIGITAL PLL
- CPU AUTO ; SELECTS CPU INTERFACE OR AUTO INTERFACE.
  ; ("H" : AUTO INTERFACE, "L" : CPU INTERFACE)
- CS ; CHIP SELECT SIGNAL (INPUT FOR CHANNEL STATUS REGISTER) ("L" : SELECT)
- DTMODE0-3 ; OUTPUT FORMAT SPECIFYING CODE OF RDATA SIGNAL (PIN NO.58)
- LRCKI ; REFERENCE L/R CLOCK INPUT (Fs PERIOD)
- LRPOL , POLARITY SWITCHING SIGNAL OF LRCKI (PIN NO.63) AND RXLR (PIN NO.62)
- MUTE0, 1 ; RDATA (PIN NO.58) MUTE PERIOD SETTING CODE
- MUTEON ; "L" : AUDIO OUTPUT BE FORCIBLY MUTE ON FOR A CERTAIN PERIOD
- PLLSEL ; "L" : ANALOG PLL. "H" : DIGITAL PLL
- RXDATA ; AES/EBU INPUT
- TST1 ; TEST INPUT (NORMALLY FIXED TO "L")
- TST3 ; TEST PIN (FIXED TO "L")

OUTPUT
- CLKOUT ; MASTER CLOCK OSCILLATOR OUTPUT AT DIGITAL PLL
- COUT ; C BIT STATUS SIGNAL EXTRACTED FROM AES/EBU INPUT SIGNAL.
- CRCA, CRCB ; OUTPUTS THE RESULT OF CHANNEL STATUS CRC CHECK OF SUBFRAME A AND B AT ERROR OCCURRING
- CSAVLDTY, CSBVLDTY ; SUBFRAME A AND B CHANNEL STATUS
- D0 E1A ; SUBFRAME A CHANNEL STATUS (CPU AUTO : "H")
- D1 E2A ; SUBFRAME A CHANNEL STATUS (CPU AUTO : "H")
- D2 E0B ; SUBFRAME B CHANNEL STATUS (CPU AUTO : "H")
- D3 E1B ; SUBFRAME B CHANNEL STATUS (CPU AUTO : "H")
- D4 E2B ; SUBFRAME B CHANNEL STATUS (CPU AUTO : "H")
- D5 MON ; SUBFRAME A CHANNEL STATUS (CPU AUTO : "H")
- D6 LN0 ; SUBFRAME A/B CHANNEL STATUS (CPU AUTO : "H")
- D7 LN1 ; SUBFRAME A/B CHANNEL STATUS (CPU AUTO : "H")
- ERROR ; ERROR INFORMATION OUTPUT (PARITY, SLIP ERROR , etc.) IN SERIAL
- FMASTER ; MASTER CLOCK OUTPUT
- INT ; INTERRUPTION SIGNAL OUTPUT
- NOSGNL ; NO SIGNAL DETECTION
- PE1 ; PARITY ERROR DETECTION OUTPUT (1 SUBFRAM)
- PE3 ; PARITY ERROR DETECTION OUTPUT (3 SUBFRAMS CONTINUOUSLY)
- PLLREF ; RXDATA SYNC DETECTION
- PLLVAR ; ANALOG PLL MASTER CLOCK 1/256 (2Fs) SIGNAL
- RDATA ; AES/EBU INPUT SIGNAL DEMODULATED SIGNAL OUTPUT
- RXBCK ; BIT CLOCK OUTPUT GENERATED FROM AES/EBU INPUT SIGNAL
- RXBLKID ; BLOCK ID SIGNAL
- RXLR ; REFERENCE L/R CLOCK OUTPUT (Fs PERIOD)
- SLIP0, SLIP1 ; DATA SLIP DETECTION
- SYNCERR , SYNC ERROR DETECTION OUTPUT.
- UNLOCK , DIGITAL PLL UNLOCK DETECTION OUTPUT.
- UOUT ; U BIT (USER DATA BIT) STATUS SIGNAL EXTRACTED FROM RXDATA SIGNAL
- VE1A ; VALIDITY ERROR DETECTION OUTPUT (ONE SUBFRAM A).
- VE1B ; VALIDITY ERROR DETECTION OUTPUT (ONE SUBFRAM B).
- VE3A ; VALIDITY ERROR DETECTION OUTPUT (3FRAMS CONTINUOUSLY FOR SUBFRAM A)
- VE3B ; VALIDITY ERROR DETECTION OUTPUT (3FRAMS CONTINUOUSLY FOR SUBFRAM B)
- VOUT ; V BIT (VALIDITY BIT) STATUS SIGNAL EXTRACTED FROM RXDATA SIGNAL

INPUT/OUTPUT
- AD0 CON ; CHANNEL STATUS (CPU AUTO : "H")
- AD1 NOA ; CHANNEL STATUS (CPU AUTO : "H")
- AD2 FS0 ; CHANNEL STATUS (CPU AUTO : "H")
- AD3 FS1 ; CHANNEL STATUS (CPU AUTO : "H")
- AD4 FS2 ; CHANNEL STATUS (CPU AUTO : "H")
- AD5 EOA ; SUBFRAME A CHANNEL STATUS (CPU AUTO : "H")
- F128 TS2 , OUTPUTS 128Fs OF DIGITAL PLL.
- FIXDPLL ; PLLSEL : "H", DIGITAL PLL OPERATION MODE SELECTION SIGNAL ("N" : NARROW MODE, "H" : WIDE MODE)
- FM12 TS4 ; 1/2 MCK OUTPUT
- LOCKPH0-5 ; PLLSEL : "H", FIXDPLL : "H" OPERATION PERIOD SETTING DATA INPUT AT NARROW MODE (DIGITAL PLL MODE)
- RD LN2 ; SUBFRAME A/B CHANNEL STATUS (CPU AUTO : "H")

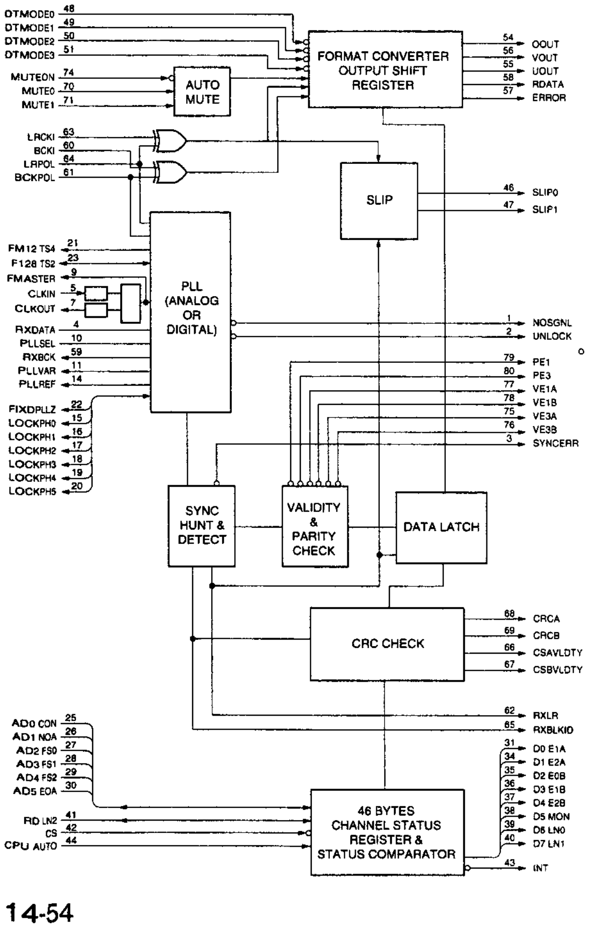

CXD8281Q (SONY)

C-MOS DIGITAL AUDIO TIME BASE COMPRESSION FOR SIF TRANSMITER

—TOP VIEW—

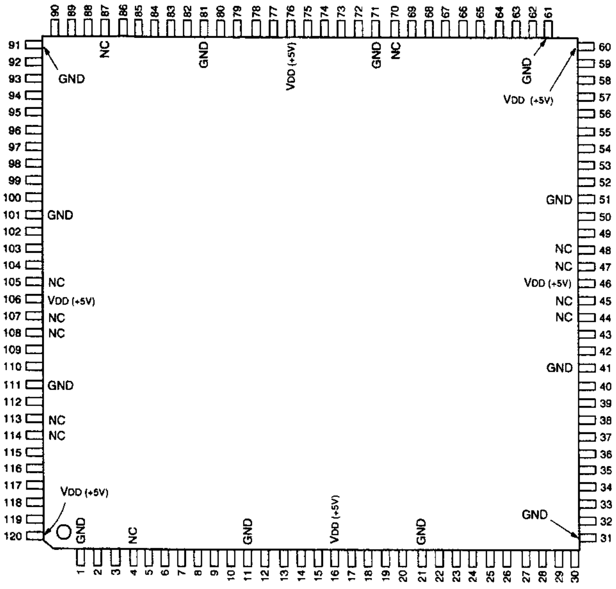

(VDD=+5V)

PIN NO.	I/O	SIGNAL	PIN NO.	I/O	SIGNAL	PIN NO.	I/O	SIGNAL	PIN NO.	I/O	SIGNAL
1	—	GND	31	—	GND	61	—	GND	91	—	GND
2	IU	IT1	32	ID	C3/4	62	IU	CWA0 (LSB)	92	OT	AUX0 (LSB)
3	IU	CLR	33	ID	C1/2	63	IU	CWA1	93	OT	AUX1
4	—	NC	34	ID	U3/4	64	IU	CWA2	94	OT	AUX2
5	O	OT1	35	ID	U1/2	65	IU	CWA3 (MSB)	95	OT	AUX3
6	O	OT2	36	ID	V3/4	66	IU	CWEN	96	OT	AUX4
7	O	OT3	37	ID	V1/2	67	IU	IT3	97	OT	AUX5
8	O	OT4	38	ID	AD3/4	68	IU	IT4	98	OT	AUX6
9	O	OT5	39	ID	AD1/2	69	IU	IT5	99	OT	AUX7
10	O	OT6	40	ID	BCK	70	—	NC	100	OT	AUX8
11	—	GND	41	—	GND	71	—	GND	101	—	GND
12	O	OT7	42	ID	128CK	72	IU	DID0	102	OT	AUX9 (MSB)
13	O	OT8	43	IU	LRCK	73	IU	DID1	103	O	ADBT
14	O	OT9	44	—	NC	74	IU	LIM0	104	ID	OEAUX
15	O	OT10	45	—	NC	75	IU	LIM1	105	—	NC
16	—	VDD	46	—	VDD	76	—	VDD	106	—	VDD
17	O	OT11	47	—	NC	77	IU	CHS1	107	—	NC
18	O	OT12	48	—	NC	78	IU	CHS2	108	—	NC
19	O	OT13	49	IU	IT2	79	IU	CHS3	109	IU	SYNC
20	O	OT14	50	IU	CWCK	80	IU	CHS4	110	ID	VCK
21	—	GND	51	—	GND	81	—	GND	111	—	GND
22	IU	CHEX1	52	IU	CWD7 (MSB)	82	IU	DLY0 (LSB)	112	IU	D2/D1
23	IU	CHEX0	53	IU	CWD6	83	IU	DLY1	113	—	NC
24	IU	AFS	54	IU	CWD5	84	IU	DLY2	114	—	NC
25	IU	LRS	55	IU	CWD4	85	IU	DLY3	115	O	OT15
26	IU	DIR	56	IU	CWD3	86	IU	DLY4 (MSB)	116	O	OT16
27	IU	20/16	57	IU	CWD2	87	—	NC	117	O	OT17
28	IU	ZCS	58	IU	CWD1	88	O	AUXT	118	O	OT18
29	ID	Z3/4	59	IU	CWD0 (LSB)	89	O	UDT	119	O	OY19
30	ID	Z1/2	60	—	VDD	90	O	ADFT	120	—	VDD

U ; INPUT WITH PULL-UP REGISTER
D ; INPUT WITH PULL-DOWN REGISTER
OT ; TRI-STATE OUTPUT

INPUT (WITH PULL-DOWN REGISTER)

128CK ; DIGITAL AUDIO 128 x Fs CLOCK
AD1/2 ; DIGITAL AUDIO CH-1/2 DATA
AD3/4 ; DIGITAL AUDIO CH-3/4 DATA
BCK ; DIGITAL AUDIO BIT CLOCK (=64 x Fs)
C1/2 ; DIGITAL AUDIO CH-1/2 CHANNEL STATUS BIT
C3/4 ; DIGITAL AUDIO CH-3/4 CHANNEL STATUS BIT
OEAUX ; OUTPUT ENABLE FOR AUX0–9 (L)
U1/2 ; DIGITAL AUDIO CH-1/2 USER DATA BIT
U3/4 ; DIGITAL AUDIO CH-3/4 USER DATA BIT
V1/2 ; DIGITAL AUDIO CH-1/2 VALIDITY FLAG
V3/4 ; DIGITAL AUDIO CH-3/4 VALIDITY FLAG
VCK ; VIDEO CLOCK (=4Fsc) INPUT
Z1/2 ; DIGITAL AUDIO CH-1/2 BLOCK SYNC (Z-FLAG)
Z3/4 ; DIGITAL AUDIO CH-3/4 BLOCK SYNC (Z-FLAG)

INPUT (WITH PULL-UP REGISTER)

20/16 ; DIGITAL AUDIO 20BIT/16BIT SELECT
AFS ; DIGITAL AUDIO FORMAT SELECT
CHEX0, 1 ; CHANNEL EXCHANGE 0, 1
CHS1–CHS4 ; AUDIO CH1–CH4 OUTPUT SELECT (L)
CLR ; POWER ON CLEAR (L)
CWA0–CWA3 ; CHANNEL STATUS REGISTER WRITE ADDRESS 0–3
CWCK ; CHANNEL STATUS REGISTER WRITE CLOCK
CWD0–CWD7 ; CHANNEL STATUS REGISTER WRITE DATA 0–7
CWEN ; CHANNEL STATUS REGISTER WRITE ENABLE
D2/D1 ; VIDEO FORMAT D2/D1 SELECT
DID0, 1 ; DATA ID BIT0, 1
DIR ; DIGITAL AUDIO MSB FIRST/LSB FIRST SELECT
DLY0–DLY4 ; DELAY CONTROL BIT0–BIT3
IT1–IT5 ; TEST (L)
LIM0, 1 ; LINE MODE 0, 1
LRCK ; DIGITAL AUDIO L/R CLOCK (=Fs)
LRS ; DIGITAL AUDIO LEFT/RIGHT BIT POSITION SELECT
SYNC ; VIDEO SYNC INPUT
ZCS ; DIGITAL AUDIO Z-FLAG C-BIT SELECT

OUTPUT

ADBT ; AUX. DATA BLOCK TIMING
ADFT ; AUX. DATA FLAG TIMING
AUXT ; AUX. DATA TIMING
OT1–OT19 ; TEST
UDT ; USER DATA TIMING

OUTPUT (TRI-STATE)

AUX0–AUX9 ; AUX. DATA 0–9

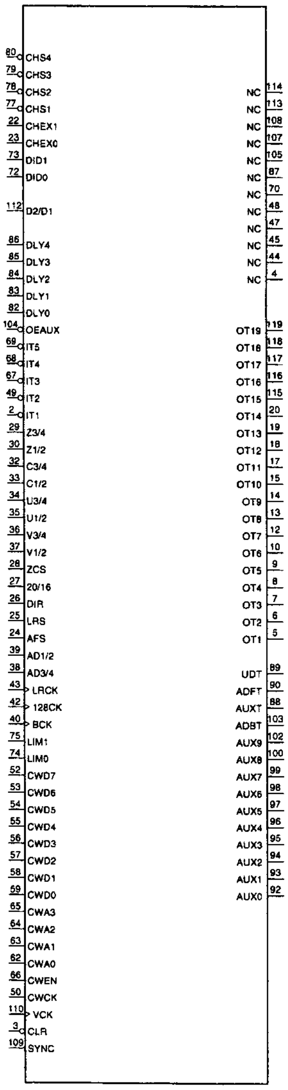

CXD8384Q (SONY)

C-MOS LTC READER/GENERATOR

-TOP VIEW-

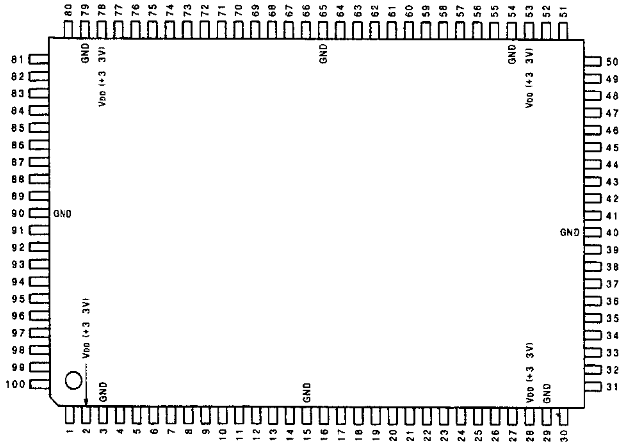

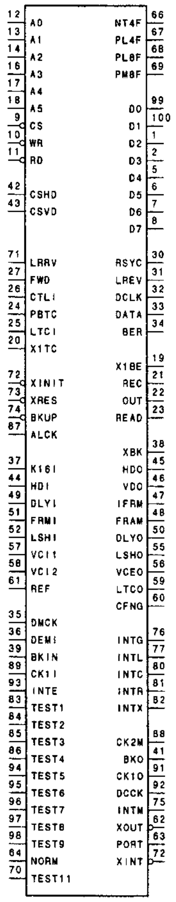

(VDD=+3 3V)

PIN No.	I/O	SIGNAL	PIN No.	I/O	SIGNAL	PIN No.	I/O	SIGNAL	PIN No.	I/O	SIGNAL
1	I/O	D2	26	I	CTLI	51	I	FRMI	76	O	INTG
2	I/O	D3	27	I	FWD	52	I	LSHI	77	O	INTL
3	-	VDD	28	-	VDD	53	-	VDD	78	-	VDD
4	-	GND	29	-	GND	54	-	GND	79	-	GND
5	I/O	D4	30	O	RSYC	55	O	LSHO	80	O	INTC
6	I/O	D5	31	O	LREV	56	O	VCEO	81	O	INTR
7	I/O	D6	32	O	DCLK	57	I	VCI1	82	O	INTX
8	I/O	D7	33	O	DATA	58	I	VCI2	83	I	TEST1
9	I	$\overline{CS}$	34	O	BER	59	O	LTCO	84	I	TEST2
10	I	$\overline{WR}$	35	I	DMCK	60	O	CFNG	85	I	TEST3
11	I	$\overline{RD}$	36	I	DEMI	61	I	REF	86	I	TEST4
12	I	A0	37	I	K161	62	O	$\overline{XOUT}$	87	I	ALCK
13	I	A1	38	O	$\overline{XBK}$	63	O	PORT	88	O	CK2M
14	I	A2	39	I	$\overline{BKIN}$	64	I	NORM	89	I	CK11
15	-	GND	40	-	GND	65	-	GND	90	-	GND
16	I	A3	41	O	BKO	66	O	NT4F	91	O	CK10
17	I	A4	42	I	CSHD	67	O	PL4F	92	O	DCCK
18	I	A5	43	I	CSVD	68	O	PL8F	93	I	INTE
19	O	X1BE	44	I	HDI	69	O	PM8F	94	I	TEST5
20	I	X1TC	45	O	HDO	70	I	TEST11	95	I	TEST6
21	O	REC	46	O	VDO	71	I/O	LRRV	96	I	TEST7
22	O	OUT	47	O	IFRM	72	O	$\overline{XINT}$	97	I	TEST8
23	O	READ	48	O	FRAM	73	I	$\overline{XRES}$	98	I	TEST9
24	I	PBTC	49	I	DLYI	74	I	$\overline{BKUP}$	99	I/O	D0
25	I	LTCI	50	O	DLYO	75	O	INTM	100	I/O	D1

INPUT

- A0-A5 :ADDRESS BUS IN
- ALCK :ARITHMETIC LOGIC UNIT CLOCK IN
- BKIN :BACKUP IN (NEGATIVE LOGIC)
- BKUP :BACKUP EXECUTION IN (NEGATIVE LOGIC)
- CK11 :SYSTEM CLOCK IN
- CSHD :COMPOSITE SYNC/HD IN
- CSVD :COMPOSITE SYNC/VD IN
- CTLI :CTL SIGNAL IN
- DEMI :LONGITUDINAL TIME AND CONTROL CODE IN
- DLYI :INPUT TO DELAY CIRCUIT
- DMCK :LTC DEMODULATE CLOCK IN
- FRMI :FRAME SIGNAL IN
- FWD :CTL DIRECTION SIGNAL IN
- HDI :HORIZONTAL SYNC INPUT
- INTE :EXTERNAL INTERRUPT IN (POSITIVE LOGIC)
- K161 :16KHz CLOCK IN BACKUP CLOCK IN
- LRRV :DIRECTION INPUT FOR LTC READER CALCULATION
- LTCI :GENERATED LTC IN
- LSHI :LTC SYNCHRINOUS H INPUT
- NORM :NORMAL/BACKUP MODE SELECT
- TEST1-TEST9, TEST11 :TEST IN
- PBTC :PLAYBACK LTC IN
- RD :READ IN (NEGATIVE LOGIC)
- REF :REFERENCE OF LTC GENERATOR
- VCI1 :LTC CLOCK IN-1
- VCI2 :EXTERNAL LTC IN
- X1TC :LTC CLOCK IN-2
- XRES :SYSTEM RESET IN (NEGATIVE LOGIC)
- WR :WRITE IN (NEGATIVE LOGIC)

OUTPUT

- BER :BI-PHASE MARK ERROR (BIT ERROR)
- BKO :BACKUP CONTROL OUT-2 (POSITIVE LOGIC)
- CFNG :COLOR FRAME ERROR FLAG OUT
- CK10 :SYSTEM CLOCK OUT
- CK2M :CLOCK 2M OUT
- CS :CHIP SELECT IN (NEGATIVE LOGIC)
- D0-D7 :DATA BUS
- DATA :DEMODULATED SERIAL DATA OUT
- DCCK :LTC DECODE CLOCK OUT
- DCLK :DEMODULATED CLOCK OUT
- DLYO :OUTPUT FROM DELAY CIRCUIT
- FRAM :FRAME SIGNAL OUT -2
- HDO :HORIZONTAL SYNC DRIVE OUT
- IFRM :FRAME SIGNAL OUT -1
- INTC :CTL INTERRUPT OUT (POSITIVE LOGIC)
- INTG :GENERATOR INTERRUPT OUT (POSITIVE LOGIC)
- INTL :READER INTERRUPT -1 OUT (POSITIVE LOGIC)
- INTM :INTERRUPT MIX OUT (POSITIVE LOGIC)
- INTR :READER INTERRUPT -2 OUT (POSITIVE LOGIC)
- INTX :EXTERNAL LTC INTERRUPT OUT (POSITIVE LOGIC)
- LREV :READ REV/FWD BIT OUT
- LSHO :LTC SYNCHRONOUS SIGNAL H OUT
- LTCO :LTC SIGNAL OUT
- NT4F, PL4F, PL8F, PM8F :DEMODULATED COLOR FRAME OUT
- OUT :EXTERNAL OUTPUT LTC OUT
- PORT :PORT
- READ :READ LTC OUT
- REC :RECORD LTC OUT
- RSYC :READ SYNC WORD DATA OUT
- VCEO :LTC CLOCK OUT
- VDO :VERTICAL SYNC DRIVE OUT
- X1BE :BI-PHASE MARK ERROR (NORMAL SPEED READER)
- XBK :BACKUP CONTROL OUT-1 (NEGATIVE LOGIC)
- XINT :INVERTED INTERRUPT MIX OUT (NEGATIVE LOGIC)
- XOUT :INVERTED EXTERNAL OUTPUT LTC OUT

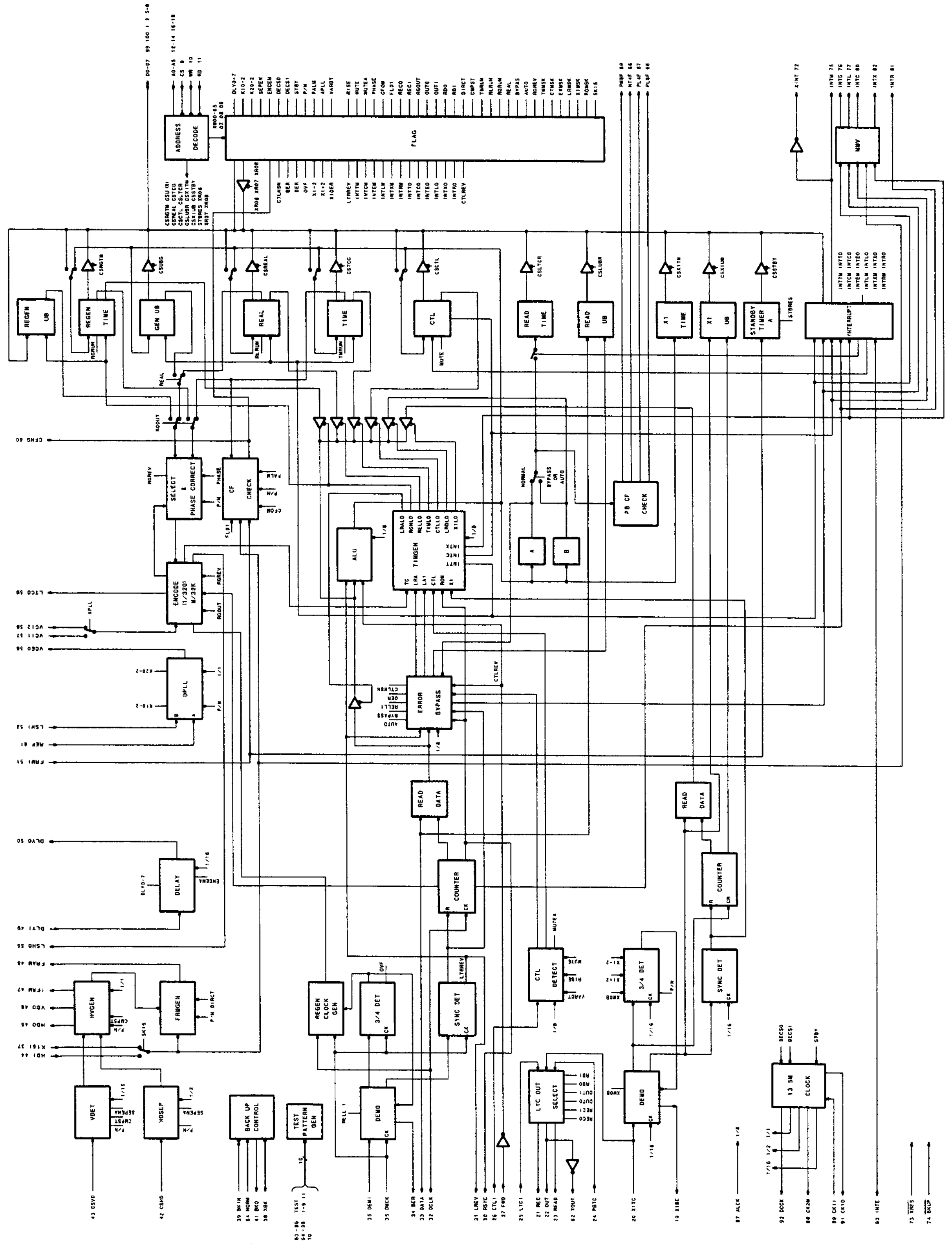

CXD8385Q (SONY)

C-MOS ENCODER
—TOP VIEW—

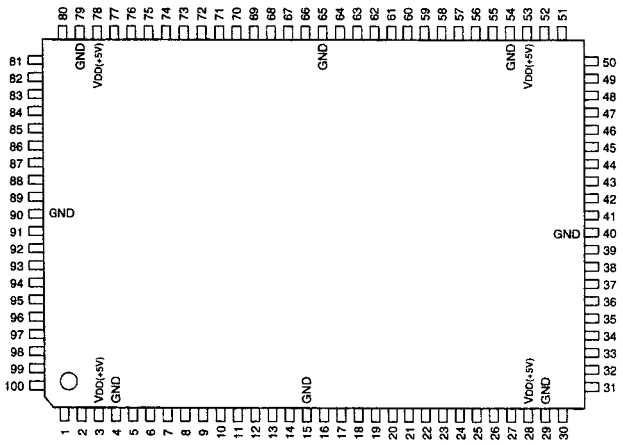

(VDD = + 5 V)

PIN No.	I/O	SIGNAL	PIN No.	I/O	SIGNAL	PIN No.	I/O	SIGNAL	PIN No.	I/O	SIGNAL
1	I	ANC9	26	I	VD1	51	O	MUD0	76	O	CM5
2	I	ANC8	27	I	VD0	52	O	MUD1	77	O	CM6
3	—	VDD	28	—	VDD	53	—	VDD	78	—	VDD
4	—	GND	29	—	GND	54	—	GND	79	—	GND
5	I	ANC7	30	I	PIN	55	O	MUD2	80	O	CM7
6	I	ANC6	31	I	PARAENC	56	O	MUD3	81	O	CM8
7	I	ANC5	32	I	HDELAY0	57	O	MUD4	82	O	CM9
8	I	ANC4	33	I	HDELAY1	58	I	VIEFENA	83	O	SYNC
9	I	ANC3	34	I	INX ON/OFF	59	O	CM0	84	O	PERROR1
10	I	ANC2	35	I	VC13	60	O	TFO	85	O	PERROR2
11	I	ANC1	36	I	VC12	61	O	TVO	86	I	MD0
12	I	ANC0	37	I	TRS MODE	62	O	MUD5	87	I	MD1
13	I	EXTH	38	I	CK27	63	O	MUD6	88	O	OC6
14	I	EXTF	39	I	INX B0/B2	64	O	MUD7	89	O	OC13
15	—	GND	40	—	GND	65	—	GND	90	—	GND
16	I	CF1	41	I	VC11	66	O	MUD8	91	O	OC27
17	I	CF2	42	I	VC10	67	O	MUD9	92	I	TX
18	I	VD9	43	I	XZLD	68	O	SYNC2	93	I	COMP
19	I	VD8	44	I	TCL	69	O	MFP	94	I	CFINFO
20	I	VD7	45	I	THCNT	70	O	CM1	95	I	SEL
21	I	VD6	46	I	TFCNT	71	O	CM2	96	I	RE
22	I	VD5	47	I	TFCK	72	O	CM3	97	I	INCH
23	I	VD4	48	I	TCNTO	73	O	ANEH	98	I	D1/$\overline{J2}$
24	I	VD3	49	O	SAVPNT	74	O	ANEV	99	I	SLNP
25	I	VD2	50	O	POUT	75	O	CM4	100	I	ANIS

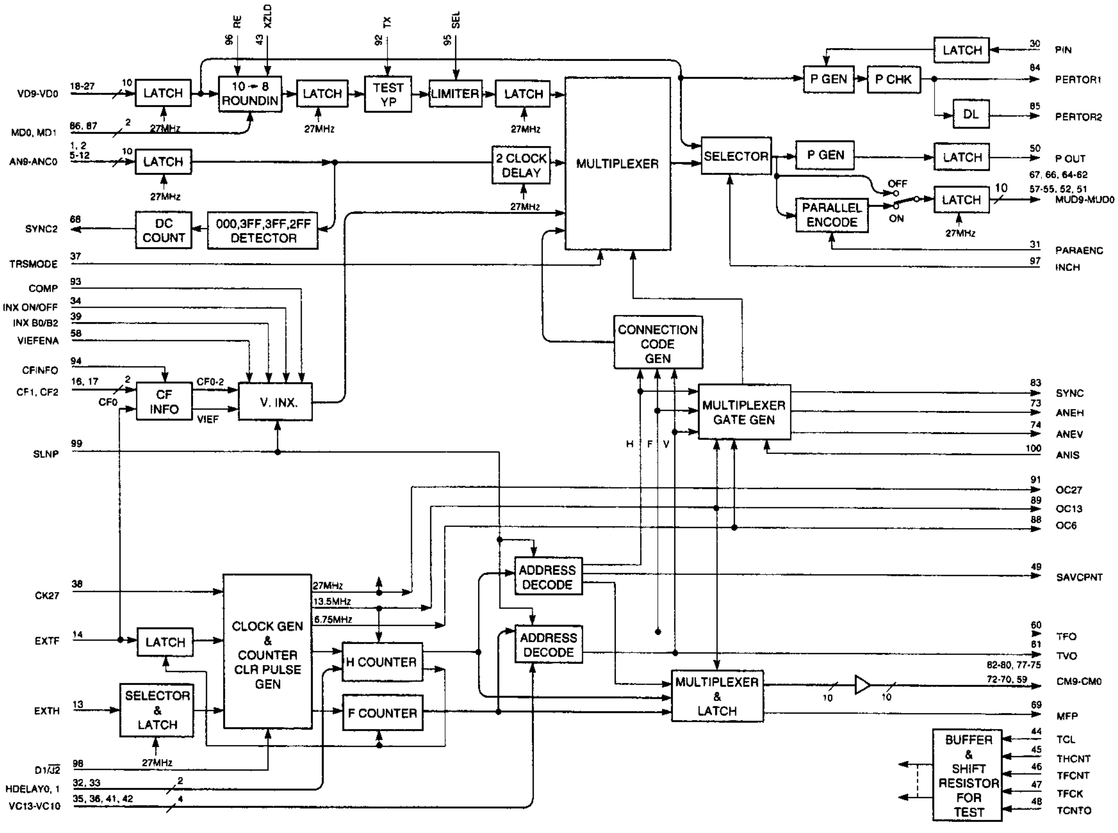

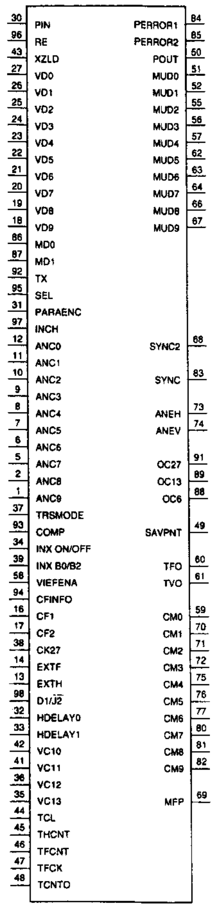

INPUT

ANC0-ANC9	:	ANCILLARY DATA
ANIS	:	ANC GATE CONTROL
CF1/CF2	:	CF DATA
CFINFO	:	CFINFO CONTROL
CK27	:	27 MHz CLOCK
COMP	:	COMPOSIT/COMPONENT
D1/J2, SLNP	:	MODE CONTROL
EXTF	:	REF F
EXTH	:	REF H
HDELAY0, HDELAY1	:	JZ REF H TRS ADVANCE CONTROL
INCH, TCL, TCNTO, TFCK, TFCNT, THCNT, XZLD	:	TEST PIN
INX ON/OFF, INX B0/B2 VIEFENA	:	V. INX. CONTROL
PARAENC	:	SCRAMBLE NRZ CONVERT ON/OFF
PIN	:	PARITY
RE	:	ROUND CONTROL
TRSMODE	:	TRS 10-BIT/8-BIT SELECT
TX	:	TEST PIN
VC10-VC13	:	525/60 V BLANK CONTROL
VD0-VD9	:	VIDEO DATA

OUTPUT

ANEH, ANEV	:	PULSE
CM0-CM9	:	H, F COUNTER
MFP	:	MULTIPLEX F COUNTER PULSE
MUD0-MUD9	:	VIDEO DATA
OC13	:	13.5 MHz CLOCK
OC27	:	27 MHz CLOCK
OC6	:	6.75 MHz CLOCK
PERROR1, PERROR2	:	PARITY ERROR DETECT
POUT	:	PARITY
SAVPNT	:	SAV PULSE
SYNC, SYNC2	:	TIMING PULSE
TFO	:	F MONITOR
TVO	:	V MONITOR

M66256GP-E2 (MITSUBISHI)FLAT PACKAGE

C-MOS 40M (5,120 × 8)-BIT LINE MEMORY

-TOP VIEW-

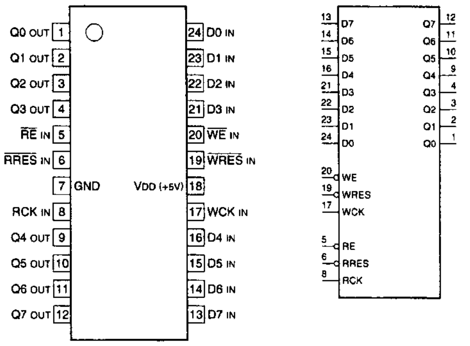

INPUT

D0-D7 : DATA
RCK : READ CLOCK
RE : READ ENABLE
RRES : READ RESET
WCK : WRITE CLOCK
WE : WRITE ENABLE
WRES : WRITE RESET

OUTPUT

Q0-Q7 : DATA

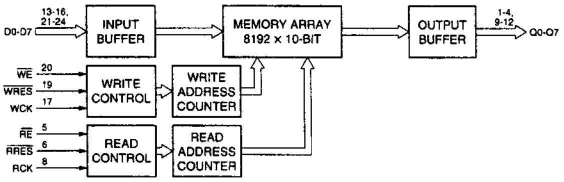

MC10125P (MOTOROLA)

ECL ECL-TO-TTL TRANSLATOR

-TOP VIEW-

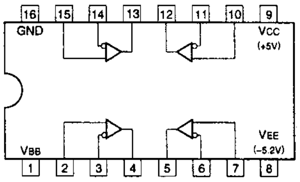

MC10H116M (MOTOROLA)FLAT PACKAGE
MC10H116MEL

ECL TRIPLE DIFFERENTIAL OR/NOR LINE RECEIVERS

-TOP VIEW-

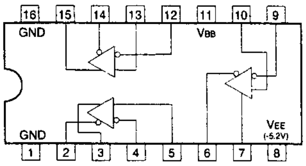

CXD8627AR (SONY)

C-MOS VIDEO AUXILIARY DATA READ/WRITE
- TOP VIEW-

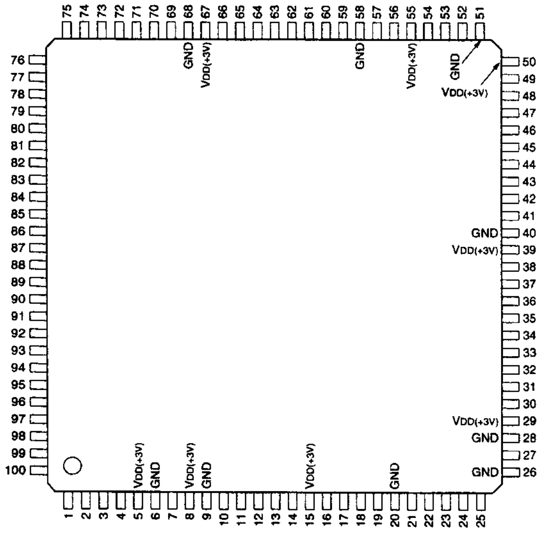

PIN NO.	I/O	SIGNAL	PIN NO.	I/O	SIGNAL	PIN NO.	I/O	SIGNAL
1	I	TST-CTL1	35	I/O	SFDT11	69	I	TST-AA0
2	I	TST-CTL2	36	I/O	SFDT10	70	I	TST-AA1
3	I	TST-CTL3	37	I/O	SFDT9	71	I	TST-AA2
4	I	TST-CTL4	38	I/O	SFDT8	72	I	TST-AA3
5	—	VDD(+3V)	39	—	VDD(+3V)	73	I	TST-AA4
6	—	GND	40	—	GND	74	I	TST-AA5
7	I	8-B COM	41	I/O	SFDT7	75	I	TST-AA6
8	—	VDD(+3V)	42	I/O	SFDT6	76	I	TST-AA7
9	—	GND	43	I/O	SFDT5	77	I	TST-AB0
10	I	RST	44	I/O	SFDT4	78	I	TST-AB1
11	I	SCK	45	I/O	SFDT3	79	I	TST-AB2
12	O	S-DATA OUT	46	I/O	SFDT2	80	I	TST-AB3
13	I	S-DATA IN	47	I/O	SFDT1	81	I	TST-AB4
14	I	CS	48	I/O	SFDT0	82	I	TST-AB5
15	—	VDD(+3V)	49	I	BUPFS	83	I	TST-AB6
16	I	THRU/NORM SEL	50	—	VDD(+3V)	84	I	TST-AB7
17	O	AUX-IOEC	51	—	GND	85	I	TST-D0
18	I	IND EN	52	I	R/P SEL	86	I	TST-D1
19	I	VI-EN	53	I	ADV0	87	I	TST-D2
20	—	GND	54	I	ADV1	88	I	TST-D3
21	I	AU-DATA	55	—	VDD(+3V)	89	I	TST-D4
22	I	AU-START	56	I	TRK-PLS	90	I	TST-D5
23	I	AU-DATA EN	57	I	FLD-PLS	91	I	TST-D6
24	O	AUX-START	58	—	GND	92	I	TST-D7
25	I	P-SAVE	59	O	PERI CNT0	93	O	TST-O0
26	—	GND	60	O	PERI CNT1	94	O	TST-O1
27	I	CK	61	O	PERI CNT2	95	O	TST-O2
28	—	GND	62	O	PERI CNT3	96	O	TST-O3
29	—	VDD(+3V)	63	O	MODE0	97	O	TST-O4
30	I	SYS SEL	64	O	MODE1	98	O	TST-O5
31	I/O	SFDT15	65	O	MODE2	99	O	TST-O6
32	I/O	SFDT14	66	O	MODE3	100	O	TST-O7
33	I/O	SFDT13	67	—	VDD(+3V)			
34	I/O	SFDT12	68	—	GND			

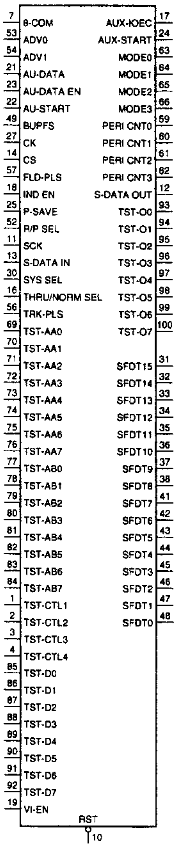

INPUT
- 8-B COM ; H : 8-BYTE COM, L : NORMAL
- ADV0, ADV1 ; OUTPUT TIMING ADVANCE CONTROL
- AU-DATA ; AUDIO SERIAL DATA
- AU-DATA EN ; AUDIO SERIAL DATA ENABLE
- AU-START ; AUDIO START
- BUPFS ; FDF DATA TIMING
- CK ; MAIN CLOCK (18.1MHz)
- CS ; CHIP SELECT
- FLD-PLS ; FIELD REFERENCE PULSE
- IND EN ; INDI AUDIO ENABLE
- P-SAVE ; POWER SAVE (H : POWER SAVE)
- R/P SEL ; REC/PB SEL (H : REC, L : PB)
- RST ; SYSTEM RESET
- SCK ; SERIAL COMMUNICATION CLOCK
- S-DATA IN ; SERIAL COMMUNICATION DATA
- SYS SEL ; SYSTEM SELECT (H : PAL, L : NTSC)
- THRU/NORM SEL ; THROUGH/NORMAL SELECT (H : THROUGH, L : NORMAL)
- TRK-PLS ; TRACK REFERENCE PULSE
- TST-AA0 - TST-AA7 ; FOR TEST
- TST-AB - TST-AB7 ; FOR TEST
- TST-CTL1 - TST-CTL4 ; FOR TEST
- TST-D0 - TST-D7 ; FOR TEST
- VI-EN ; VIDEO ENABLE

OUTPUT
- AUX-IOEC ; I/O ENABLE CONTROL
- AUX-START ; AUXILIARY START
- MODE0 - MODE3 ; MODE COMMAND
- PERI CNT0 - PERI CNT3 ; PERIPHERAL IC CONTROL COMMAND
- S-DATA OUT ; SERIAL COMMUNICATION DATA
- TST-O0 - TST-O7 ; FOR TEST

INPUT/OUTPUT
- SFDT15 - SFDT0 ; SYF/FDF DATA BUS

MB40569PFV-ER (FUJITSU)

20 MHz 9-BIT A/D CONVERTER

- TOP VIEW-

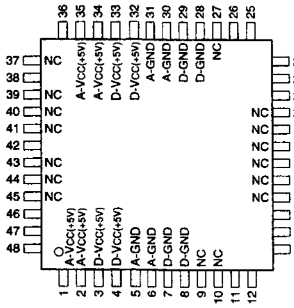

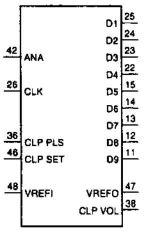

PIN NO.	I/O	SIGNAL	PIN NO.	I/O	SIGNAL
1	—	A-Vcc(+5V)	25	O	D1(MSB)
2	—	A-Vcc(+5V)	26	I	CLK
3	—	D-Vcc(+5V)	27	—	NC
4	—	D-Vcc(+5V)	28	—	D-GND
5	—	A-GND	29	—	D-GND
6	—	A-GND	30	—	A-GND
7	—	D-GND	31	—	A-GND
8	—	D-GND	32	—	D-Vcc(+5V)
9	—	NC	33	—	D-Vcc(+5V)
10	—	NC	34	—	A-Vcc(+5V)
11	O	D9(LSB)	35	—	A-Vcc(+5V)
12	O	D8	36	I	CLP PLS
13	O	D7	37	—	NC
14	O	D6	38	O	CLP VOL
15	O	D5	39	—	NC
16	—	NC	40	—	NC
17	—	NC	41	—	NC
18	—	NC	42	I	ANA
19	—	NC	43	—	NC
20	—	NC	44	—	NC
21	—	NC	45	—	NC
22	O	D4	46	I	CLP SET
23	O	D3	47	O	VREFO
24	O	D2	48	I	VREFI

INPUT

ANA ; ANALOG SIGNAL
CLK ; CLOCK
CLP PLS ; CLAMP PULSE
CLP SET ; CLAMP VOLTAGE SETTING
VREFI ; REFERENCE VOLTAGE (+3V)

OUTPUT

CLP VOL ; CLAMP VOLTAGE
D1 - D9 ; DIGITAL SIGNAL (D9 : LSB, D1 : MSB)
VREFO ; REFERENCE VOLTAGE (+3V)

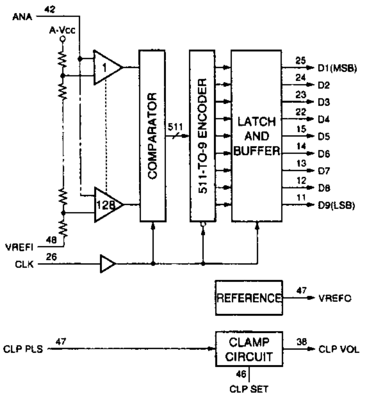

MC14577CF (MOTOROLA)FLAT PACKAGE
MC14577CFEL

C-MOS DUAL VIDEO AMPLIFIERS

-TOP VIEW-

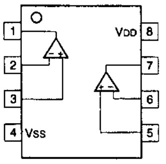

*VDD + I Vss I = + 5V to +12V

NJM2230M (JRC)FLAT PACKAGE
NJM2230M(TE2)

VIDEO SIGNAL DETECTOR

—TOP VIEW—

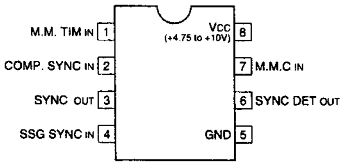

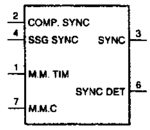

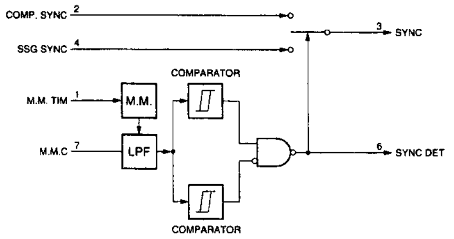

S-8054HN-CB-S (SEIKO I&E)
S-8054HN-CB-T1

C-MOS VOLTAGE DETECTOR WITH N-CHANNEL OPEN DRAIN OUTPUT

-TOP VIEW-

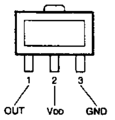

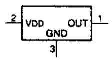

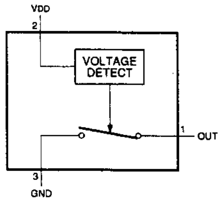

MC10H124M (MOTOROLA)FLAT PACKAGE
MC10H124MEL

ECL TTL-TO-ECL TRANSLATOR

-TOP VIEW-

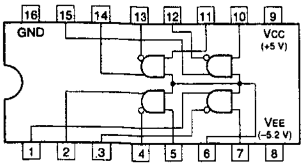

SBX1601A (SONY)

8- OR 10-BIT PARALLEL-TO-SERIAL CONVERTER

-BOTTOM VIEW-

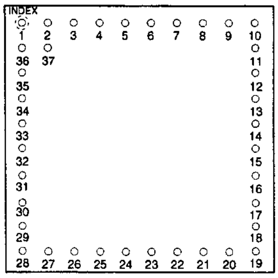

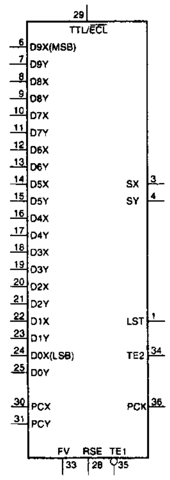

INPUT

D9X – D0X, D9Y – D0Y; PARALLEL DATA INPUTS
PCX, PCY ; PARALLEL CLOCK INPUTS
FV ; VCO FREQ. ADJ. INPUT
RSE ; VCO RANGE SELECT INPUT (H : HIGH RANGE)
TE1 ; TEST TERMINAL (LOW = TEST)
TTL/ECL ; VCC FOR INPUT LEVEL SELECT (+5 V = TTL, GND = ECL)

OUTPUT

LST ; PLL LOCK DETECT OUTPUT (H : LOCK)
PCK ; PARALLEL CLOCK OUTPUT
SX, SY ; SERIAL DATA OUTPUTS
TE2 ; TEST TERMINAL

VEE1 = –5 V
VEE2 = –3.5 V

PIN NO.	I/O	SIGNAL	PIN NO.	I/O	SIGNAL	PIN NO.	I/O	SIGNAL	PIN NO.	I/O	SIGNAL
1	O	LST	11	I	D7Y	21	I	D2Y	31	I	PCY
2	–	GND	12	I	D6X	22	I	D1X	32	–	GND
3	O	SX	13	I	D6Y	23	I	D1Y	33	I	FV
4	O	SY	14	I	D5X	24	I	D0X(LSB)	34	O	TE2
5	–	GND	15	I	D5Y	25	I	D0Y	35	I	TE1
6	I	D9X(MSB)	16	I	D4X	26	–	VEE1	36	O	PCK
7	I	D9Y	17	I	D4Y	27	–	VEE2	37	–	NC
8	I	D8X	18	I	D3X	28	I	RSE			
9	I	D8Y	19	I	D3Y	29	–	TTL/ECL			
10	I	D7X	20	I	D2X	30	I	PCX			

SBX1602A (SONY)

8- OR 10-BIT SERIAL-TO-PARALLEL CONVERTER

-TOP VIEW-

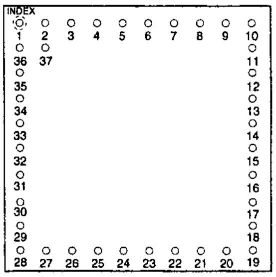

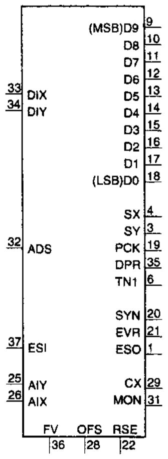

INPUT

ADS : SERIAL DATA SELECT INPUT (H : DIGITAL L : ANALOG)
AIX, AIY : EQUALIZER INPUTS
DIX, DIY : SERIAL DATA INPUTS
ESI : PLL SIGNAL INPUT
OFS : AGC OFFSET ADJ. INPUT
FV : VCO FREQ. ADJ. INPUT
RSE : VCO RANGE SELECT INPUT (H : HIGH RANGE)

OUTPUT

CX : EQUALIZER DETECT OUTPUT (L : NO INPUT)
D9-D0 : PARALLEL DATA OUTPUTS
DPR : SERIAL DATA DETECT OUTPUT (L: NO INPUT)
ESO : TEST NODE PLL ERROR SIGNAL OUTPUT
EVR : REFERENCE VOLTAGE FOR PARALLEL OUTPUT
MON : EQUALIZER MONITOR OUTPUT
PCK : PARALLEL CLOCK OUTPUT
SX,SY : SERIAL DATA OUTPUTS
SYN : TRS DETECT OUTPUT
TN1 : TEST TERMINAL

VEE1, 3 = –5V
VEE2 = –3.5V

PIN NO.	I/O	SIGNAL	PIN NO.	I/O	SIGNAL	PIN NO.	I/O	SIGNAL	PIN NO.	I/O	SIGNAL
1	O	ESO	11	O	D7	21	O	EVR	31	O	MON
2	–	GND	12	O	D6	22	I	RSE	32	I	ADS
3	O	SY	13	O	D5	23	–	VEE3	33	I	DIX
4	O	SX	14	O	D4	24	–	GND	34	I	DIY
5	–	GND	15	O	D3	25	I	AIY	35	O	DPR
6	O	TN1	16	O	D2	26	I	A IX	36	I	FV
7	–	VEE1	17	O	D1	27	–	GND	37	I	ESI
8	–	VEE2	18	O	D0 (LSB)	28	I	OFS			
9	O	D9 (MSB)	19	O	PCK	29	O	CX			
10	O	D8	20	O	SYN	30	–	GND			

SC7S02F (MOTOROLA)CHIP PACKAGE
TC7S02F(TE85R)

C-MOS 2-INPUT NOR GATE

—TOP VIEW—

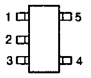

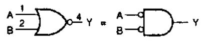

Y = $\overline{A+B}$ = $\overline{A}\cdot\overline{B}$

A	B	Y
0	0	1
0	1	0
1	0	0
1	1	0

0 ; LOW LEVEL
1 ; HIGH LEVEL

TYPE	VDD
4S01F	+3 to +18V
7S02F	+2 to +6V
7S02FU	
7SH02FU	

SN74HC139ANS (TI)FLAT PACKAGE
SN74HC139ANS-E05
TC74VHC139F(EL) (TOSHIBA)
TC74VHC139FS(EL) (TOSHIBA)FLAT PACKAGE(SMALL)
TC74VHC139FT(EL) (TOSHIBA)FLAT PACKAGE

C-MOS DUAL 2-TO-4 DECODER/DEMULTIPLEXER

- TOP VIEW -

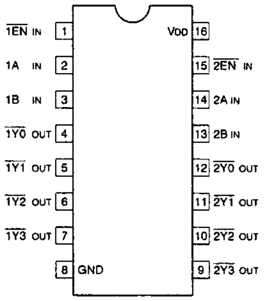

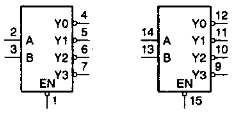

INPUTS			OUTPUTS			
EN	B	A	Y3	Y2	Y1	Y0
0	0	0	1	1	1	0
0	0	1	1	1	0	1
0	1	0	1	0	1	1
0	1	1	0	1	1	1
1	X	X	1	1	1	1

0 ; LOW LEVEL
1 ; HIGH LEVEL
X ; DON'T CARE

NOTE :

TYPE	VDD
TC74AC/TC74VHC	+2 to +5.5V
HCT/ACT	+5V
OTHER TYPES	+2 to +6V

SN74HC573BNS-E05 (TI)FLAT PACKAGE

C-MOS 3-STATE OUTPUTS OCTAL LATCH

- TOP VIEW -

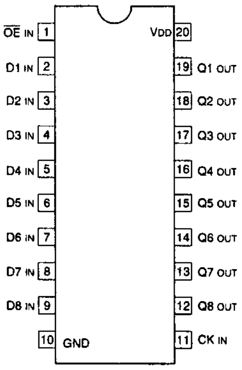

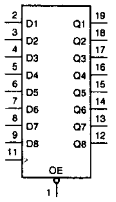

INPUT			OUT
OE	CK	D	Q
0	1	1	1
0	1	0	0
0	0	X	Qo
1	X	X	HI-Z

0 ; LOW LEVEL
1 ; HIGH LEVEL
X ; DON'T CARE
HI-Z ; HIGH IMPEDANCE
Qo ; NO CHANGE

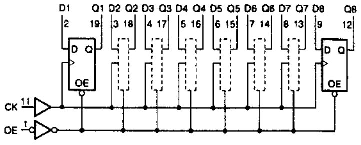

NOTE :

TYPE	VDD
74HC	+2 to +6V
74ABT 74ACT 74HCT/74VHCT	+5V
74AC/74VHC	+2 to +5.5V

TC4W66FU(TE12R) (TOSHIBA)FLAT PACKAGE

C-MOS DUAL BILATERAL SWITCH

-TOP VIEW-

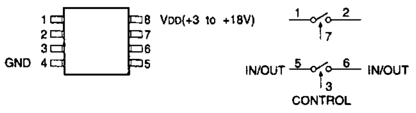

CONTROL	SWITCH
0	OFF
1	ON

0 : LOW LEVEL
1 : HIGH LEVEL

TC74HC4052AFS(EL) (TOSHIBA)FLAT PACKAGE
TC74HC4052AFT(EL) (TOSHIBA)

C-MOS DUAL 4-CHANNEL ANALOG MULTIPLEXER/DEMULTIPLEXER
-TOP VIEW-

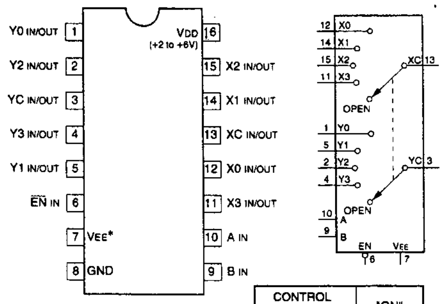

VEE*: VDD-VEE=+3 to +12V

CONTROL INPUTS			"ON" CHANNEL
EN	B	A	
0	0	0	0
0	0	1	1
0	1	0	2
0	1	1	3
1	X	X	OPEN

0 ; LOW LEVEL
1 ; HIGH LEVEL
X ; DON'T CARE

TC74VHC14F (TOSHIBA)FLAT PACKAGE
TC74VHC14F(EL)

C-MOS HEX SCHMITT TRIGGER INVERTERS
—TOP VIEW—

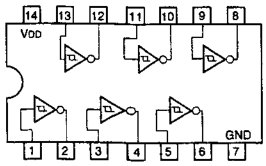

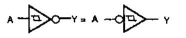

Y = $\bar{A}$

A	Y
0	1
1	0

0 ; LOW LEVEL
1 ; HIGH LEVEL

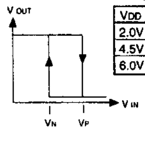

VDD	VN	VP
2.0V	0.75V	1.25V
4.5V	1.9V	2.7V
6.0V	2.6V	3.6V

NOTE :

TYPE	VDD
TC74AC/VHC	+2V to +5.5V
OTHER TYPES	+2V to +6V

TC74VHC153FS(EL) (TOSHIBA)FLAT PACKAGE
TC74VHC153FT(EL) (TOSHIBA)FLAT PACKAGE

C-MOS DUAL 4-LINE-TO-1-LINE DATA SELECTOR/MULTIPLEXER
-TOP VIEW-

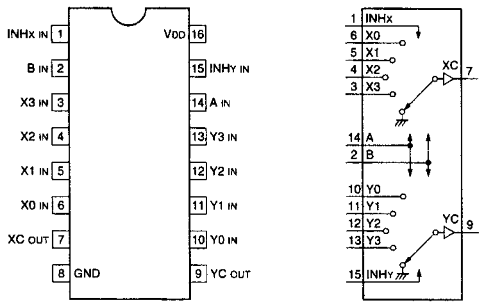

NOTE:

TYPE	VDD
ACT/HCT/FCT	+5V
40H	+2 to +8V
TC74AC/TC74VHC	+2 to +5.5V
OTHER TYPES	+2 to +6V

CONTROL IN			ON CHANNEL
INH	B	A	
0	0	0	0
0	0	1	1
0	1	0	2
0	1	1	3
1	X	X	GND

0 : LOW LEVEL
1 : HIGH LEVEL
X : DON'T CARE

TC74VHC164F (TOSHIBA)FLAT PACKAGE
TC74VHC164FS(EL)
TC74VHC164FT(EL) (TOSHIBA)FLAT PACKAGE

C-MOS 8-BIT SERIAL-IN/PARALLEL-OUT SHIFT REGISTER
—TOP VIEW—

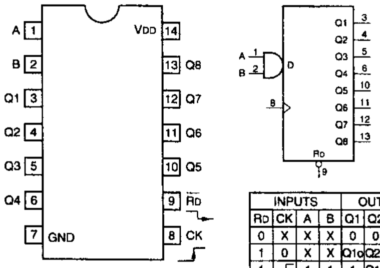

INPUTS				OUTPUTS			
RD	CK	A	B	Q1	Q2	···	Q8
0	X	X	X	0	0	0	0
1	0	X	X	Q1o	Q2o	···	Q8o
1	↑	1	1	1	Q1n	···	Q7n
1	↑	0	X	0	Q1n	···	Q7n
1	↑	X	0	0	Q1n	···	Q7n

0 ; LOW LEVEL
1 ; HIGH LEVEL
X ; DON'T CARE

NOTE:

TYPE	VDD
AC/VHC	+2 to +5.5 V
HC	+2 to +6 V
HCT	+5 V

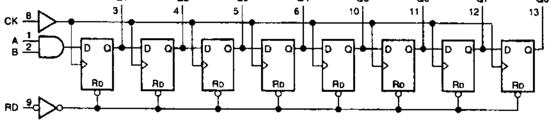

TC74VHC367F (TOSHIBA)FLAT PACKAGE
TC74VHC367F(EL)

C-MOS BUS DRIVER WITH 3-STATE OUTPUTS
- TOP VIEW -

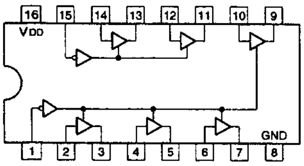

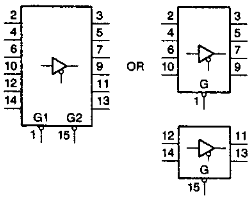

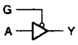

G	A	Y
0	0	0
0	1	1
1	X	HI-Z

0 ; LOW LEVEL
1 ; HIGH LEVEL
X ; DON'T CARE
HI-Z ; HIGH IMPEDANCE

NOTE :

TYPE	VDD
TC74AC/TC74VHC	+2 to +5.5V
OTHER TYPES	+2 to +6V

TC7S32FU(TE85R) (TOSHIBA)FLAT PACKAGE
TC7SH32FU-TE85R (TOSHIBA)FLAT PACKAGE

C-MOS 2-INPUT OR GATE

-TOP VIEW-

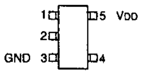

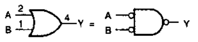

Y = A + B = $\bar{A} \cdot \bar{B}$

A	B	Y
0	0	0
0	1	1
1	0	1
1	1	1

0 ; LOW LEVEL
1 ; HIGH LEVEL

TYPE	VDD
7S32F 7S32FU	+2 to +6V
4S71F	+3 to +18V
7SH32FU	+2 to +5.5V

TC7SH00FU-TE85R (TOSHIBA)FLAT PACKAGE

C-MOS 2-INPUT NAND GATE
— TOP VIEW —

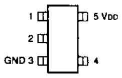

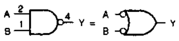

Y = $\overline{A \cdot B}$ = $\bar{A} + \bar{B}$

A	B	Y
0	0	1
0	1	1
1	0	1
1	1	0

0 ; LOW LEVEL
1 ; HIGH LEVEL

TYPE	VDD
7S00F 7S00FU	+2 to +6 V
4S11F 4SU11F	+3 to +18 V
7SH00FU	+2 to +5.5 V

TC74VHC574F (TOSHIBA)FLAT PACKAGE
TC74VHC574F(EL)

C-MOS 3-STATE D-TYPE EDGE-TRIGGERED FLIP-FLOP
-TOP VIEW-

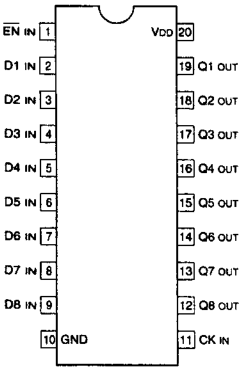

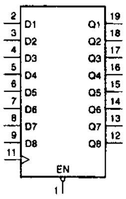

EACH FLIP-FLOP

INPUTS			OUT
EN	CK	D	Q
0	↑	1	1
0	↑	0	0
0	↓	X	Q0
1	X	X	HI-Z

0 ; LOW LEVEL
1 ; HIGH LEVEL
X ; DON'T CARE
HI-Z ; HIGH IMPEDANCE
Q0 ; NO CHANGE

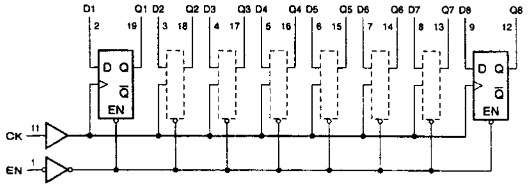

NOTE;

TYPE	VDD
74HC	+2 to +6V
74AC/74VHC	+2 to +5.5V
74ACT/74FCT 74HCT/74VHCT	+4.5 to +5.5V
74LCX	+2 to +3.6V
74LVC	+2.7 to +3.6V

TC7W00F (TOSHIBA)CHIP PACKAGE
TC7W00F(TE12R) (TOSHIBA)CHIP PACKAGE

C-MOS DUAL 2-INPUT NAND GATE
-TOP VIEW-

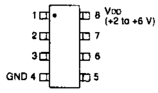

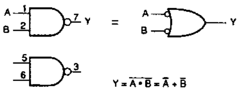

Y = $\overline{A \cdot B}$ = $\bar{A} + \bar{B}$

A	B	Y
0	0	1
0	1	1
1	0	1
1	1	0

0; LOW LEVEL
1; HIGH LEVEL

TC7W139FU(TE12R) (TOSHIBA)CHIP PACKAGE

C-MOS 2 to 4 LINE DECODER WITH ENABLE
—TOP VIEW—

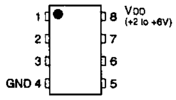

F TYPE

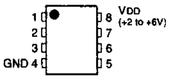

FU TYPE

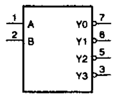

INPUTS		OUTPUTS				SELECTED OUTPUT
SELECT						
B	A	$\overline{Y0}$	$\overline{Y1}$	$\overline{Y2}$	$\overline{Y3}$	
0	0	0	1	1	1	$\overline{Y0}$
0	1	1	0	1	1	$\overline{Y1}$
1	0	1	1	0	1	$\overline{Y2}$
1	1	1	1	1	0	$\overline{Y3}$

0 ; LOW LEVL
1 ; HIGH LEVEL

TLC2932IPW-E20 (TI)

C-MOS VCO AND PHASE FREQUENCY DETECTOR
- TOP VIEW -

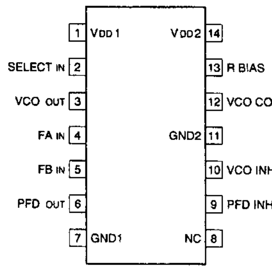

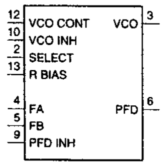

VDD 1,2 ; +3 or +5V
VDD 1 ; FOR LOGIC
VDD 2 ; FOR VCO
GND1 ; FOR LOGIC
GND2 ; FOR VCO

INPUT
FA ; REFERENCE FREQUENCY
FB ; INPUT FREQUENCY FROM OUTSIDE COUNTER
PFD INH ; PFD INHIBIT
SELECT ; VCO OUTPUT FREQUENCY SELECT
VCO CONT ; VCO CONTROL VOLTAGE
VCO INH ; VCO INHIBIT

OUTPUT
PFD ; PHASE FREQUENCY DETECTOR
VCO ; VOLTAGE CONTROLLED OSCILLATOR

OTHER
R BIAS ; BIAS RESISTOR FOR VCO OSCILLATION FREQUENCY SETTING

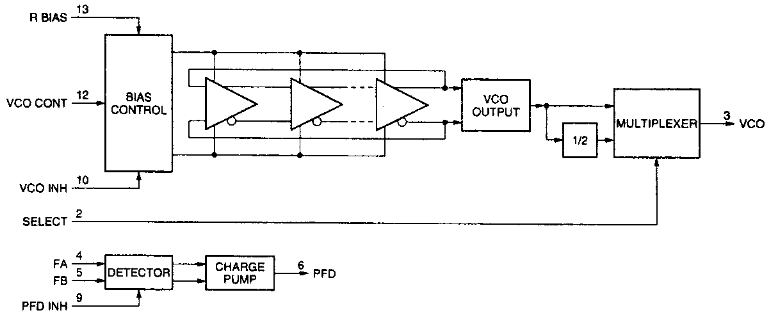

TC7W74F (TOSHIBA)CHIP PACKAGE
TC7W74F(TE12R) (TOSHIBA)CHIP PACKAGE

C-MOS D-TYPE FLIP-FLOPS WITH PRESET AND CLEAR
-TOP VIEW-

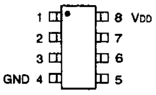

(SCALE 3/1)

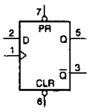

TYPE	VDD
7W74F	+2 to +6V
7W74FU	
7WH74FU	+2 to +5.5V

INPUTS				OUTPUTS		FUNCTION
$\overline{CLR}$	$\overline{PR}$	CK	D	Qn+1	$\overline{Qn+1}$	
0	1	X	X	0	1	CLEAR
1	0	X	X	1	0	PRESET
0	0	X	X	1	1	–
1	1	↑	0	0	1	–
1	1	↑	1	1	0	–
1	1	↓	X	Qn	$\overline{Qn}$	NO CHANGE

0 ; LOW LEVEL
1 ; HIGH LEVEL
X ; DON'T CARE

TL084CPW-E05
TL084CPW-E20 (TI)FLAT PACKAGE

OPERATIONAL AMPLIFIER
(J FET INPUT)
—TOP VIEW—

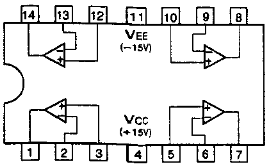

TL32088CNS-E20 (TI)

PRE-AMP (FOR AUDIO 2 CH A/D CONVERTER)
-TOP VIEW-

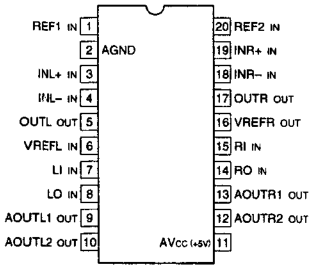

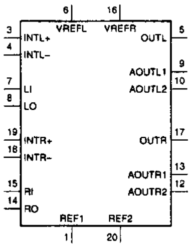

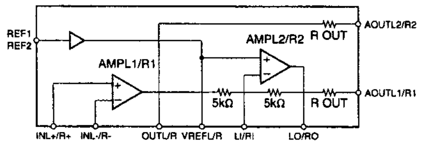

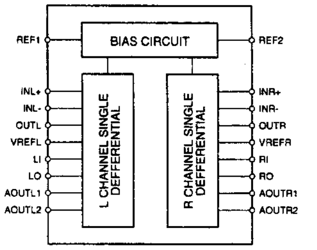

TLC320AD58CDWR (TI)

2CH AUDIO A/D CONVERTER
-TOP VIEW-

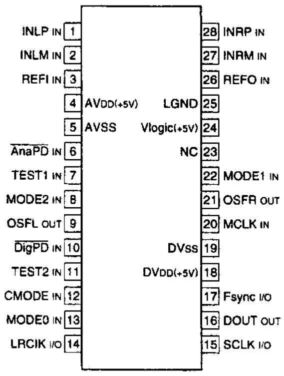

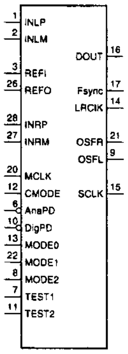

INPUT
AnaPD ; ANALOG POWER DOWN MODE
CMODE ; CLOCK MODE
DigPD ; DIGITAL POWER DOWN MODE
INLM ; L-CH INV ANALOG INPUT
INLP ; L-CH NONINV ANALOG INPUT
INRM ; R-CH INV ANALOG INPUT
INRP ; R-CH NONINVE ANALOG INPUT
MCLK ; MASTER CLOCK
MODE0-MODE2 ; SIRIAL MODE
REFI ; REFERENCE VOLTAGE INPUT
REFO ; INTERNAL REFERENCE VOLTAGE POWER
TEST1, TEST2 ; TEST MODE

OUTPUT
DOUT ; DATA
OSFL/R ; L/R-CH OVER SCALE FLAG

INPUT/OUTPUT
Fsync ; FRAME SYNCHRONOUS
LRCIK ; LR CLOCK
SCLK ; SHIFT CLOCK

MODE			MASTER	bit	MSB/LSB
0	1	2	/SLAVE		FIRST
0	0	0	SLAVE	16	MSB
0	0	1	SLAVE	18	LSB
0	1	0	SLAVE	18	MSB
0	1	1	MASTER	16	MSB
1	0	0	MASTER	18	MSB
1	0	1	MASTER	18	LSB
1	1	0	MASTER	16	MSB
1	1	1	MASTER	16	LSB

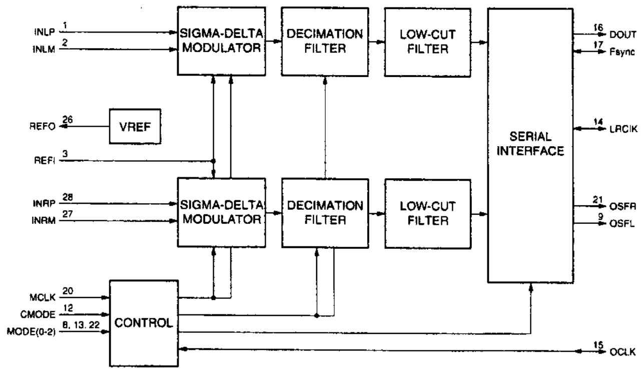

TL431CPS (TI)
TL431CPS-E05

ADJUSTABLE PRECISION SHUNT REGULATOR
-TOP VIEW-

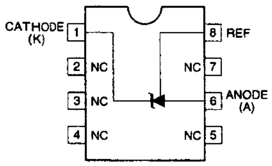

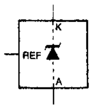

TLC5733AIPM (TI)

C-MOS 8-BIT 3CHANNEL SEMI-FLASH A/D CONVERTER

-TOP VIEW-

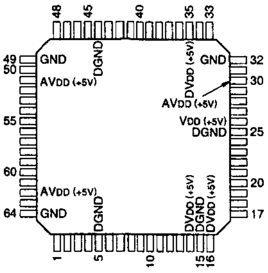

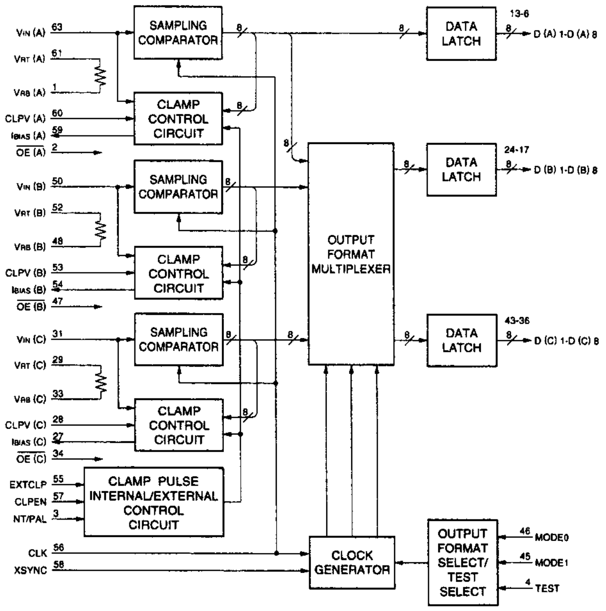

(DV_{DD}, AV_{DD} = +5 V)

PIN No.	I/O	SIGNAL	PIN No.	I/O	SIGNAL	PIN No.	I/O	SIGNAL	PIN No.	I/O	SIGNAL	PIN No.	I/O	SIGNAL
1	I	V_{RB} (A)	14	—	DV_{DD} (QA)	27	—	I_{BIAS} (C)	40	O	D (C) 4	53	I	CLPV (B)
2	I	$\overline{OE}$ (A)	15	—	DGND (QB)	28	I	CLPV (C)	41	O	D (C) 3	54	—	I_{BIAS} (B)
3	I	NT/PAL	16	—	DV_{DD} (QB)	29	I	V_{RT} (C)	42	O	D (C) 2	55	I	EXTCLP
4	I	TEST	17	O	D (B) 8	30	—	AV_{DD} (C)	43	O	D (C) 1	56	I	CLK
5	—	DGND (QA)	18	O	D (B) 7	31	I	V_{IN} (C)	44	—	DGND (QC)	57	I	CLPEN
6	O	D (A) 8	19	O	D (B) 6	32	—	GND (C)	45	I	MODE1	58	I	XSYNC
7	O	D (A) 7	20	O	D (B) 5	33	I	V_{RB} (C)	46	I	MODE0	59	—	I_{BIAS} (A)
8	O	D (A) 6	21	O	D (B) 4	34	I	$\overline{OE}$ (C)	47	I	$\overline{OE}$ (B)	60	I	CLPV (A)
9	O	D (A) 5	22	O	D (B) 3	35	—	DV_{DD} (QC)	48	I	V_{RB} (B)	61	I	V_{RT} (A)
10	O	D (A) 4	23	O	D (B) 2	36	O	D (C) 8	49	—	GND (B)	62	—	AV_{DD} (A)
11	O	D (A) 3	24	O	D (B) 1	37	O	D (C) 7	50	I	V_{IN} (B)	63	I	V_{IN} (A)
12	O	D (A) 2	25	—	DGND	38	O	D (C) 6	51	—	AV_{DD} (B)	64	—	GND (A)
13	O	D (A) 1	26	—	DV_{DD}	39	O	D (C) 5	52	I	V_{RT} (B)			

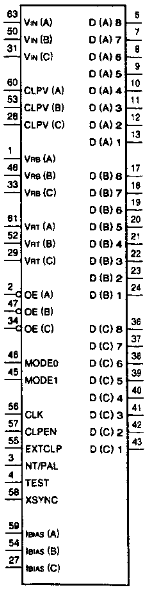

INPUT

CLK	; CLOCK
CLPEN	; CLAMP ENABLE FOR INTERNAL CLAMP CIRCUIT
CLPV (A) - CLPV (C)	; CLAMPING LEVEL OF ADC
EXTCLP	; EXTERNAL CLAMP PULSE
MODE0, MODE1	; OUTPUT FORMAT MODE SELECT
NT/$\overline{PAL}$	; NTSC/PAL CONTROL (NTSC = 0, PAL = 1)
$\overline{OE}$ (A) - $\overline{OE}$ (C)	; OUTPUT ENABLE OF DATA
TEST	; TEST = 1, DEVICE = 0
V_{IN} (A) - V_{IN} (C)	; ANALOG INPUT OF ADC
V_{RB} (A) - V_{RB} (C)	; REFERENCE VOLTAGE BOTTOM OF ADC
V_{RT} (A) - V_{RT} (C)	; REFERENCE VOLTAGE TOP OF ADC
XSYNC	; OUTPUT SYNCHRONOUS

OUTPUT

D (A) 1 - D (A) 8	; DATA OUTPUT OF ADC A
D (B) 1 - D (B) 8	; DATA OUTPUT OF ADC B
D (C) 1 - D (C) 8	; DATA OUTPUT OF ADC C

OTHER

DGND	; DIGITAL GROUND
DGND (QA) - DGND (QC)	; DIGITAL GROUND FOR OUTPUT OF ADC
GND (A) - GND (C)	; GROUND OF ADC
I_{BIAS} (A) - I_{BIAS} (C)	; CLAMPING BIAS CURRENT OF ADC
AV_{DD} (A) - AV_{DD} (C)	; ANALOG V_{DD} OF ADC
DV_{DD}	; DIGITAL V_{DD}
DV_{DD} (QA) - DV_{DD} (QC)	; DIGITAL V_{DD} FOR OUTPUT OF ADC

0 ; LOW LEVEL
1 ; HIGH LEVEL

TMS4C2973-26DTR (TI)FLAT PACKAGE

C-MOS 2.9M (245,760-WORDx12) BITS FIELD MEMORY
-TOP VIEW-

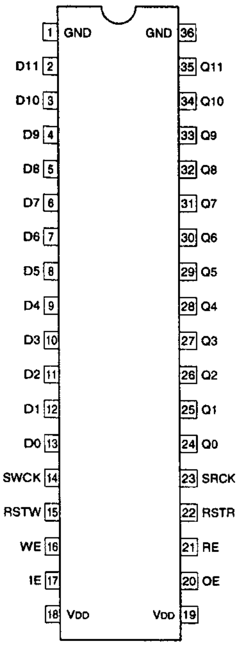

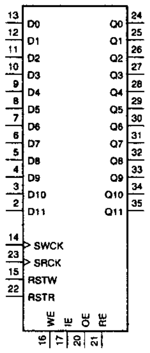

INPUT
D0 - D11 ; DATA INPUTS
IE ; INPUT ENABLE
OE ; OUTPUT ENABLE
RE ; READ ENABLE
RSTR ; RESET READ
RSTW ; RESET WRITE
SRCK ; SERIAL READ CLOCK
SWCK ; SERIAL WRITE CLOCK
WE ; WRITE ENABLE

OUTPUT
Q0 - Q11 ; DATA OUTPUTS

NOTE :

TYPE	VDD
TMS4C2970 TMS4C2972	+5V
TMS4C2973	+3.3V

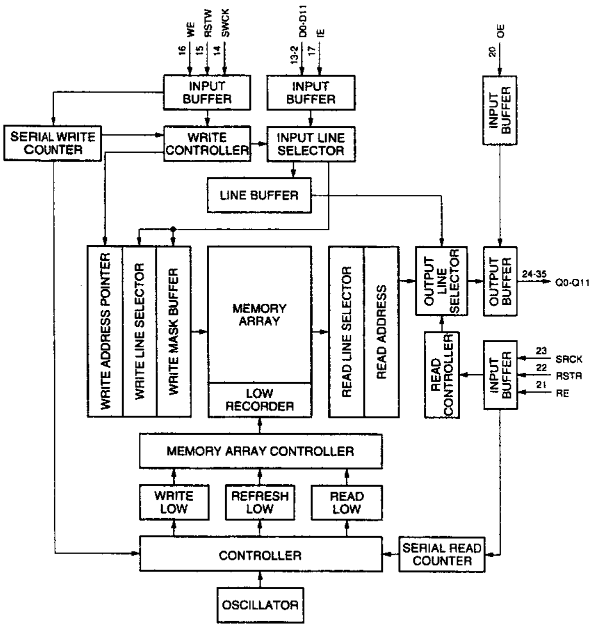

NOTE :
TMS4C2972 AND TMS4C2973 ALLOW BLOCK RANDOM ACCESS.

UPD485505G-35 (NEC)FLAT PACKAGE
UPD485505G-35-E2

C-MOS 40K (5,048 x 8)-BIT FIFO MEMORY
—TOP VIEW—

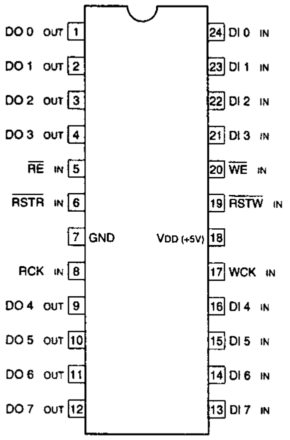

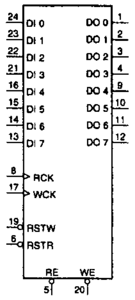

DI 0 - 7 ; DATA INPUTS
DO 0 - 7 ; DATA OUTPUTS
RCK ; READ CLOCK INPUT
RE ; READ ENABLE INPUT
RSTR ; RESET READ INPUT
RSTW ; RESET WRITE INPUT
WCK ; WRITE CLOCK INPUT
WE ; WRITE ENABLE INPUT

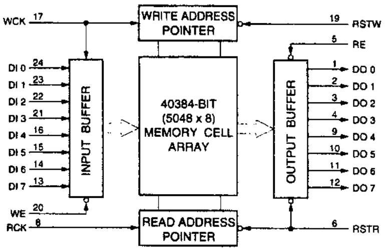

SECTION 15
SPARE PARTS AND OPTIONAL FIXTURES

15-1. NOTES ON SPARE PARTS

(1) Safety Related Components Warning
Components identified by shading marked with ⚠ on the schematic diagrams, exploded views and electrical spare parts list are critical to safe operation. Replace these components with Sony parts whose parts numbers appear as shown in this manual or in service manual supplements published by Sony.

(2) Standardization of Parts
Replace Parts that are supplied from Sony Parts Center can sometimes have different shape and external appearance than what are actually used in equipment. This is due to "accommodating the improved parts and/or engineering changes" or "standardization of genuine parts."

(3) Stocked of Parts
The parts marked with "s" in the SP column of the exploded views and electrical spare parts list are normally required for routine service work. Orders for parts marked with "o" will be processed, but allow for additional delivery time.

(4) Units of Capacitors, Inductors, and Resistors
The following units are omitted in the schematic diagrams, exploded views, and electrical part lists unless otherwise specified;

Capacitor : μF
Inductors : μH
Resistors : Ω

15-1. 補修用部品注意事項

(1) 安全重要部品
回路図、分解図、電気部品表中、⚠印の部品は安全性を維持するために重要な部品です。したがって、これらの部品を交換する場合は必ず指定の部品と交換してください。

(2) 部品の共通化
ソニーから供給される部品はセットに実装されているものと異なることがあります。これは部品の共通化、改良等によるものです。分解図や電気部品表中には現時点での共通化された部品が記載されています。

(3) 部品在庫
SP (Supply code) 欄が "o" で示されている部品は交換頻度が低い部品であるので在庫していないことがあり、納期が長くなることがあります。

(4) コンデンサ、インダクタ、抵抗の単位
回路図、分解図、電気部品表中、特に明記したものを除き、下記の単位は省略されています。

コンデンサー ： μF
インダクター ： μH
抵抗 ： Ω

15-2. EXPLODED VIEWS

REEL CHASSIS

No.	Parts No.	SP	Description
1	A-8278-411-A	s	MOTOR ASSY, RS
2	A-8311-186-A	s	BLOCK (S) ASSY, REEL
3	A-8311-187-A	s	BLOCK (T) ASSY, REEL
4	A-8311-188-A	s	TABLE (S) ASSY, RS
5	A-8311-189-A	s	TABLE (T) ASSY, RS
6	A-8311-617-B	s	HOLDER (E) BLOCK ASSY, MIC
7	X-3678-717-1	s	ROD ASSY,CRANK
8	X-3678-722-2	s	RETAINER(A) ASSY, SHAFT
9	X-3678-750-1	s	ARM S ASSY, CRANK
10	X-3678-751-1	s	ARM T ASSY, CRANK
11	X-3678-761-5	s	ASSY, REEL DECK
12	X-3678-771-1	s	GEAR ASSY, WORM
13	X-3678-782-1	s	CASE SUB ASSY, WORM GEAR
14	X-3678-783-4	s	ARM ASSY, MIC
15	X-3678-873-1	s	ASSY, BRAKE(S)
16	X-3678-874-1	s	ASSY, BRAKE(T)
17	X-3678-958-2	s	PUSH ARM ASSY, C.R
18	1-454-787-12	s	SOLENOID, PLUNGER
19	1-662-914-11	o	PRINTED CIRCUIT BOARD, SE-315
20	1-662-915-11	o	PRINTED CIRCUIT BOARD, SE-361
21	1-662-916-11	o	PRINTED CIRCUIT BOARD. RM-159
22	1-662-917-11	o	PRINTED CIRCUIT BOARD, RM-160
23	1-777-534-11	s	WIRE (FLAT TYPE) (9 CORE)(S)
24	1-777-731-11	s	WIRE (FLAT TYPE) (9 CORE)(T)
25	1-956-616-11	o	HARNESS, SUB (FG)
26	3-370-323-01	s	SPRING, COMPRESSION
27	3-603-908-01	s	ARM, RELEASE,BRAKE
28	3-603-953-01	s	BRACKET, LIMITER
29	3-604-444-01	s	RETAINER, SHAFT
30	3-604-495-01	s	SPRING, HOLDER
31	3-604-500-01	s	GUIDE, PLATE
32	3-604-501-01	s	WHEEL(S), WORM
33	3-604-502-01	s	SPRING, RLR
34	3-604-503-01	s	RETAINER(B), SHAFT
35	3-604-533-01	s	GEAR(T), CRANK
36	3-604-534-01	s	GEAR(S), CRANK
37	3-604-556-01	s	WHEEL(T), WORM
38	3-604-652-01	s	SHAFT, SLIDE
39	3-604-681-02	s	RELEASE LEVER, REEL LOCK
40	3-604-846-01	s	HOLDER, LIMITER

No.	Parts No.	SP	Description
41	3-605-988-01	s	SPRING, C.R PUSH
42	3-669-465-01	s	WASHER (1.5), STOPPER
43	3-669-596-00	s	WASHER (2.3), STOPPER
44	3-683-089-01	s	BEARING(S)
45	3-701-437-61	s	WASHER
46	3-701-437-11	s	WASHER
47	3-701-437-21	s	WASHER
48	3-701-437-91	s	WASHER
49	3-605-865-01	s	HEXAGON SOCKET SET SCREW WP 2X3

REEL CHASSIS

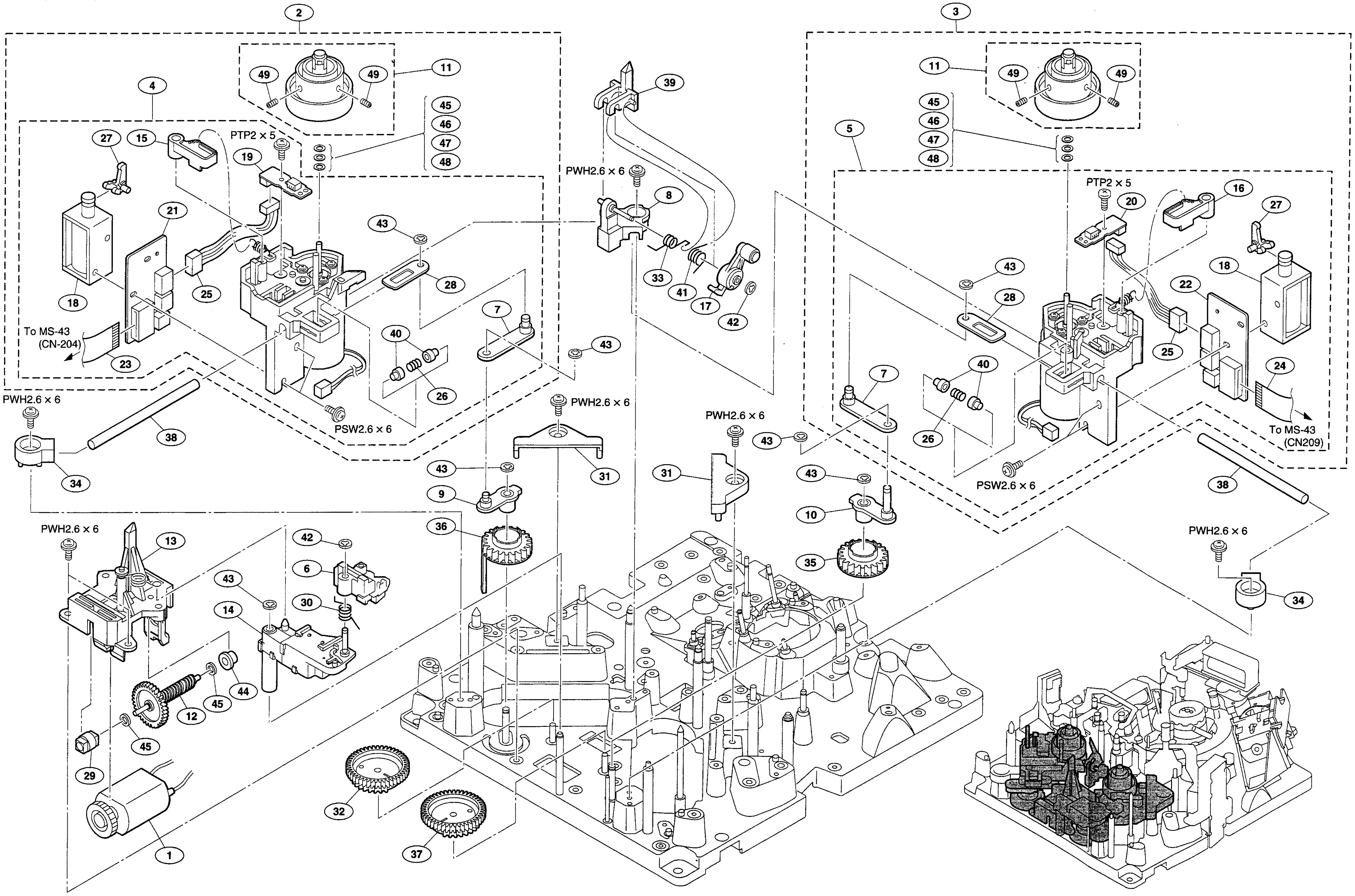

NY-SP0754 / DRUCK 505

 S ARM ASSY & GEAR BOX ASSY

S ARM ASSY & GEAR BOX ASSY

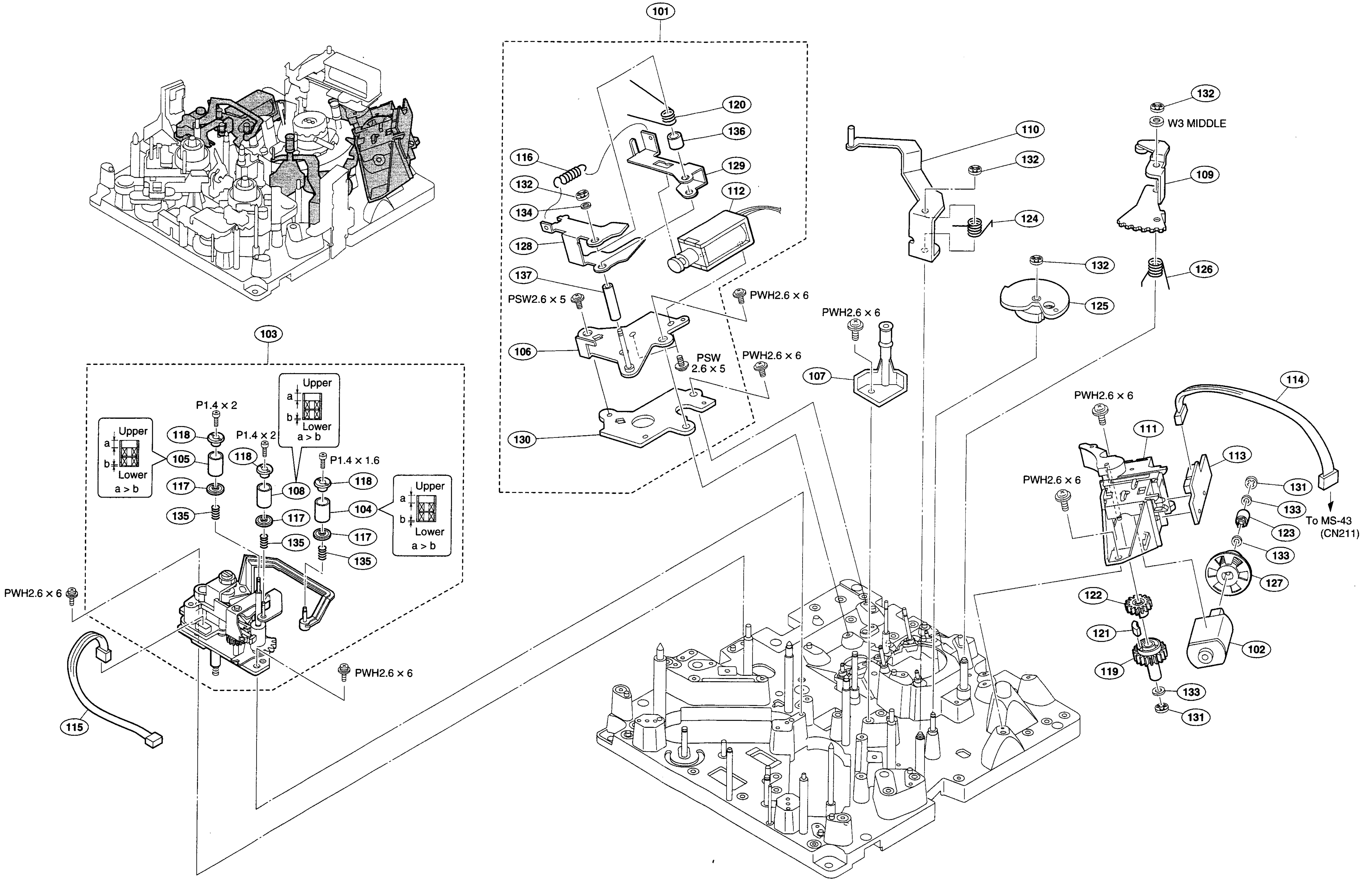

SONY-SP0754 / DRUCK 506

S ARM ASSY & GEAR BOX ASSY

No.	Parts No.	SP	Description
101	A-8278-409-B	s	PRESS ASSY, PINCH
102	A-8278-410-B	s	MOTOR ASSY
103	A-8312-672-A	s	ARM ASSY, S
104	X-3678-711-1	s	ROLLER ASSY, TR
105	X-3678-723-1	s	ROLLER ASSY, GUIDE
106	X-3678-747-1	s	BASE ASSY, P
107	X-3604-922-1	s	TG-12 ASSY
108	X-3678-762-1	s	ROLLER ASSY, TG2 GUIDE
109	X-3678-769-2	s	ARM ASSY, DRIVING, T
110	X-3678-770-2	s	ARM ASSY, T PULL
111	X-3678-772-4	s	BASE ASSY, GEAR BOX
112	1-454-337-21	s	SOLENOID, PLUNGER
113	1-662-912-11	s	PRINTED CIRCUIT BOARD, PTC-88
114	1-956-617-11	o	HARNESS, SUB (THREADING)
115	1-956-620-11	o	HARNESS, SUB (1TREG)
116	2-270-832-11	s	SPRING, TENSION
117	3-603-903-01	s	FLANGE, LOWER
118	3-603-904-01	s	FLANGE, UPPER
119	3-603-924-01	s	WHEEL, WORM
120	3-603-925-02	s	SPRING(B), TORSION
121	3-604-442-01	s	RUBBER, LIMITTER
122	3-604-443-01	s	GEAR, LIMITER
123	3-604-444-01	s	RETAINER, SHAFT
124	3-604-447-01	s	SPRING, T ARM
125	3-604-483-01	s	GEAR, CAM
126	3-604-484-01	s	SPRING, DRIVING ARM
127	3-604-487-01	s	GEAR, WORM
128	3-604-489-01	s	LEVER, P PRESS
129	3-604-490-01	s	P LIMITER
130	3-604-492-01	s	SUB BASE, P
131	3-669-465-01	s	WASHER (1.5), STOPPER
132	3-669-596-00	s	WASHER (2.3), STOPPER
133	3-701-437-21	s	WASHER
134	3-701-439-11	s	WASHER
135	3-722-156-01	s	SPRING, COMPRESSION
136	4-611-326-01	o	SPACER (4X6)
137	9-910-999-31	s	SPACER (3X18)

DRUM & THREADING RING

No.	Parts No.	SP	Description
201	A-8278-388-C	s	TG-6 ASSY
202	A-8278-414-K	s	RING ASSY, LOADING
203	A-8278-477-B	s	DRIVE ASSY, HC
204	A-8312-011-E	s	HC ASSY (FOR DSR-60/60P)
204	A-8316-539-B	s	HC ASSY (2) (FOR DSR-80/80P)
205	A-8315-156-A	s	HEAD DRUM ASSY, DEH-05A-R(FOR DSR-60/60P)
206	X-3678-718-1	s	ROLLER ASSY, PRECEDING
207	X-3678-723-1	s	ROLLER ASSY, GUIDE
208	X-3678-746-1	s	ARM ASSY, PINCH ROLLER
209	X-3678-758-2	s	ARM ASSY, S ROLLER
210	X-3678-899-4	s	BASE ASSY, TC
211	X-3678-939-1	o	BASE ASSY, SOL
212	X-3678-945-1	o	ARM ASSY, SOL DRIVE
213	X-3678-953-1	s	STOPPER ASSY, HC BASE
214	1-454-337-21	s	SOLENOID, PLUNGER
215	1-662-908-11	s	PRINTED CIRCUIT BOARD, PTC-84
216	1-801-573-12	s	SENSOR, DEW CONDENSATION
217	1-956-623-11	o	HARNESS, SUB (TH/UNTH)
218	3-953-138-01	s	SPRING, COMPRESSION
219	3-531-576-11	s	RIVET
220	3-603-919-03	s	FLANGE, PECEDING UPPER
221	3-603-931-03	s	FLANGE, TG-6,UPPER
222	3-603-932-02	s	SPRING, COMPRESSION
223	3-604-446-01	s	SPRING, PINCH ARM
224	3-604-563-04	s	FLANGE, PRECEDING LOWER
225	3-604-564-02	s	ROLLER, RING
226	3-604-644-01	s	GEAR S, PULL
227	3-604-649-01	s	SPRING, S LIMITER
228	X-3604-614-1	s	FLANGE ASSY, GUIDE
229	3-604-790-02	s	GUIDE, TAPE
230	3-604-791-02	s	FLANGE, TG-6 LOWER
231	3-605-805-01	o	SPACER, SOL
232	3-605-807-01	o	ARM, LIMITTER SOL
233	3-605-812-01	o	SPRING, SOL ARM
234	3-606-102-02	o	SLIDER, SOL
235	3-642-719-01	s	SPACER (2.6X11)
236	3-657-086-00	o	SPACER (3X20)
237	3-669-465-01	s	WASHER (1.5), STOPPER
238	3-669-596-00	s	WASHER (2.3), STOPPER
239	3-698-829-01	s	NUT (M2)
240	3-701-437-11	s	WASHER
241	3-701-439-21	s	WASHER
242	3-701-441-21	s	WASHER
243	A-8315-493-A	s	HEAD DRUM ASSY, DEH-06A-R(FOR DSR-80/80P)
244	3-608-501-02	s	SUPPORT, GUIDE
245	3-722-156-01	s	SPRING, COMPRESSION

 DRUM & THREADING RING

DRUM & THREADING RING

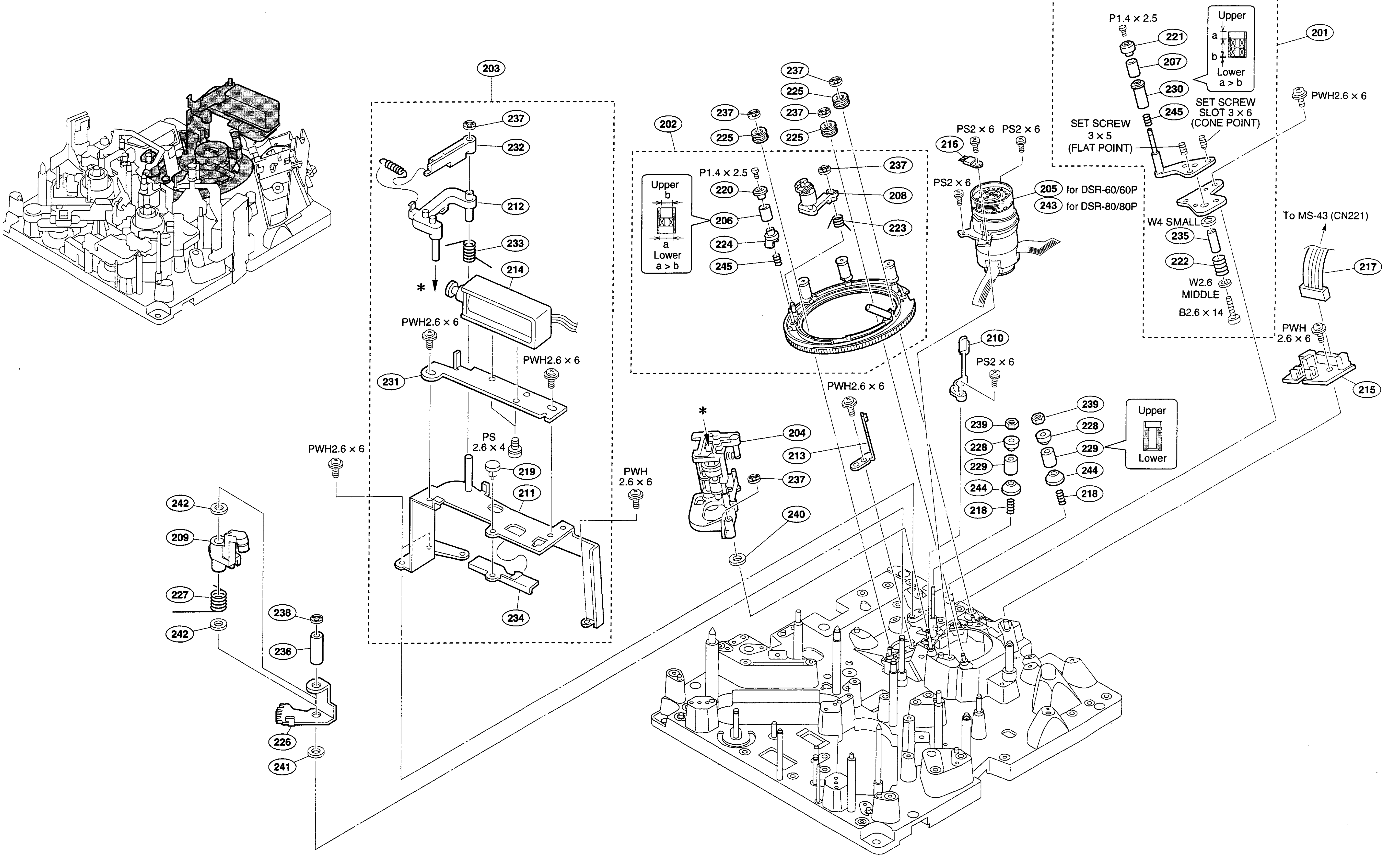

CAPSTAN MOTOR

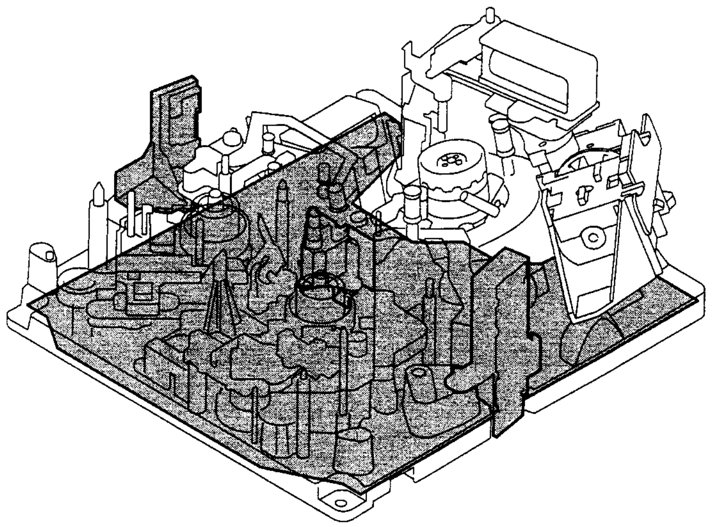

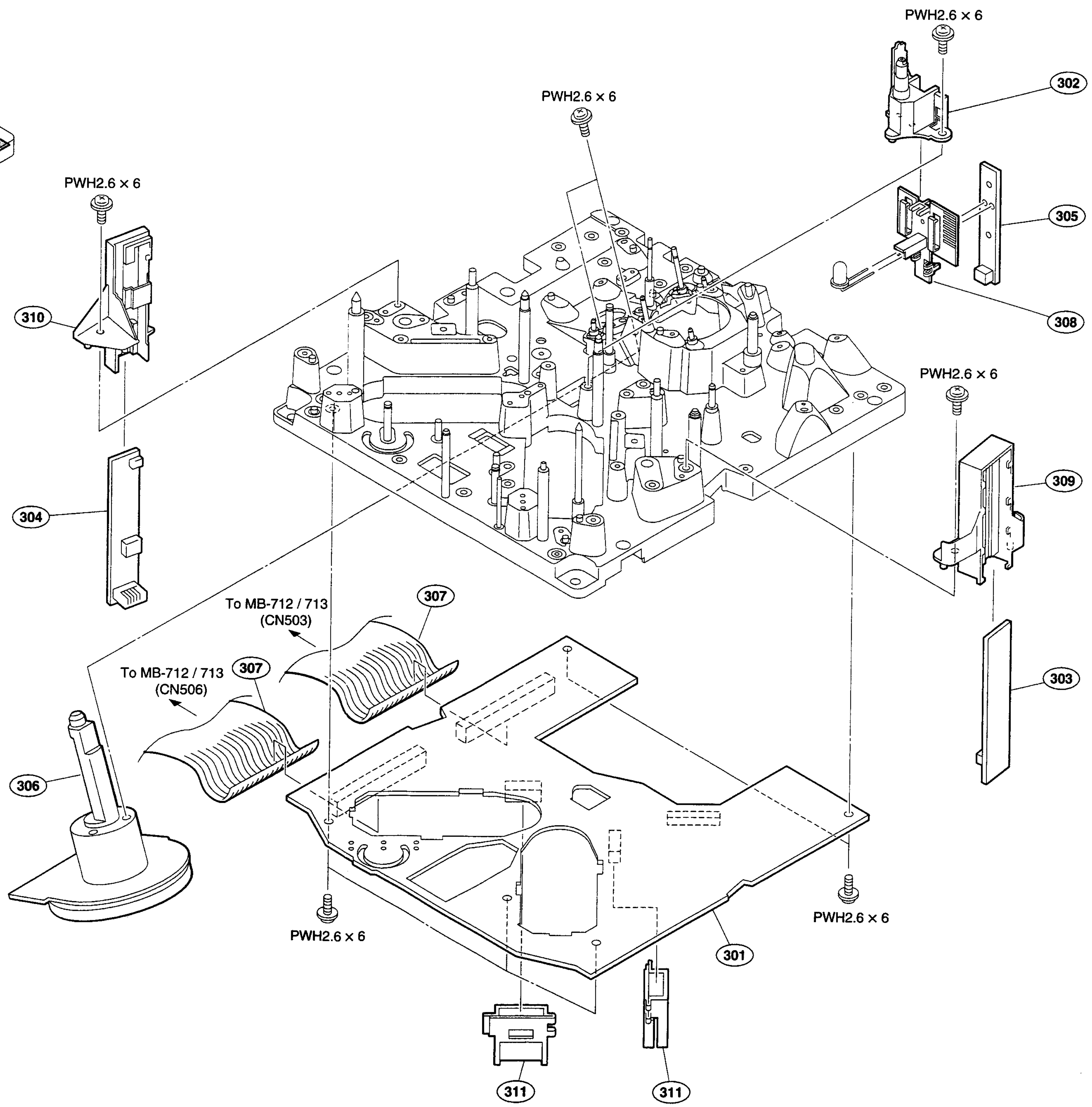

ORNAMENTAL PANEL BLOCK

ORNAMENTAL PANEL BLOCK

No.	Parts No.	SP	Description
401	A-8277-912-A	o	MOUNTED CIRCUIT BOARD, HP-73
402	A-8277-913-A	o	MOUNTED CIRCUIT BOARD, FP-75
403	A-8311-890-D	o	CASE ASSY, MENU PANEL
404	A-8312-948-A	o	MOUNTED CIRCUIT BOARD, RP-103 (FOR DSR-60/60P)
405	A-8312-955-A	o	MOUNTED CIRCUIT BOARD, KY-336B (FOR DSR-60/60P)
406	X-3678-708-3	s	FOOT, ASSY
407	X-3678-987-2	s	PANEL SUB ASSY, FRONT (FOR DSR-60)
408	X-3678-988-2	s	KEY ASSY, MENU-PANEL B (FOR DSR-60/60P)
409	X-3678-989-2	s	PANEL SUB ASSY, FRONT (FOR DSR-60P)
410	⚠1-570-117-31	s	SWITCH, SEESAW (AC POWER)
411	1-777-531-12	s	WIRE, FLEXIBLE CARD 11P
412	1-777-537-11	s	WIRE (FLAT TYPE) (36 CORE)
413	1-956-618-11	o	HARNESS, SUB (HP-MB)
414	⚠1-956-621-11	s	HARNESS, SUB (AC SW)
415	3-174-264-01	s	SCREW (+) (B4X8) (CU,NI)
416	3-604-557-02	s	KNOB, HP VOL
417	3-604-560-01	o	BRACKET, HP
418	3-605-529-01	s	HOLDER, MINI-SIDE&FL
419	3-605-629-02	o	CASE, U
420	3-605-631-02	s	CAP, SWITCH
421	3-605-632-02	o	PLATE, TOP
422	3-606-333-03	o	GUIDE E, PCB
423	3-606-336-01	o	GUIDE F, PCB
424	3-606-337-01	o	GUIDE G, PCB
425	3-650-537-00	o	WASHER
426	3-688-814-31	s	CAP, SWITCH
427	3-717-380-01	o	GUARD, REC
428	3-717-394-03	o	PLATE (SMALL), ORNAMENTAL, SW
429	3-953-235-21	s	DAMPER, OIL
430	3-604-558-02	s	KNOB, AU VOL (FOR DSR-80/80P)
431	X-3679-320-2	s	PANEL SUB ASSY, FRONT (FOR DSR-80)
432	X-3679-321-2	s	PANEL SUB ASSY, FRONT (FOR DSR-80P)
433	X-3678-922-2	s	KEY ASSY, MENU-PANEL (FOR DSR-80/80P)
434	3-605-444-01	o	GUIDE D, PCB (FOR DSR-80/80P)
435	A-8277-878-A	o	MOUNTED CIRCUIT BOARD, KY-336 (FOR DSR-80/80P)

CAPSTAN MOTOR

No.	Parts No.	SP	Description
301	A-8312-024-A	o	MOUNTED CIRCUIT BOARD, MS-43
302	X-3678-721-4	s	ASSY, PRISM
303	1-662-909-11	s	PRINTED CIRCUIT BOARD, PTC-85
304	1-662-910-11	s	PRINTED CIRCUIT BOARD, PTC-86
305	1-662-911-11	s	PRINTED CIRCUIT BOARD, PTC-87
306	1-698-881-11	s	MOTOR, DC (CAPSTAN)
307	1-777-537-11	s	WIRE (FLAT TYPE) (36 CORE)
308	3-603-920-03	o	HOLDER, LED
309	3-604-493-01	s	HOLDER, TOP SENSOR
310	3-604-494-01	s	HOLDER, END SENSOR
311	3-604-657-01	s	HOLDER, FLAT CABLE

ORNAMENTAL PANEL BLOCK

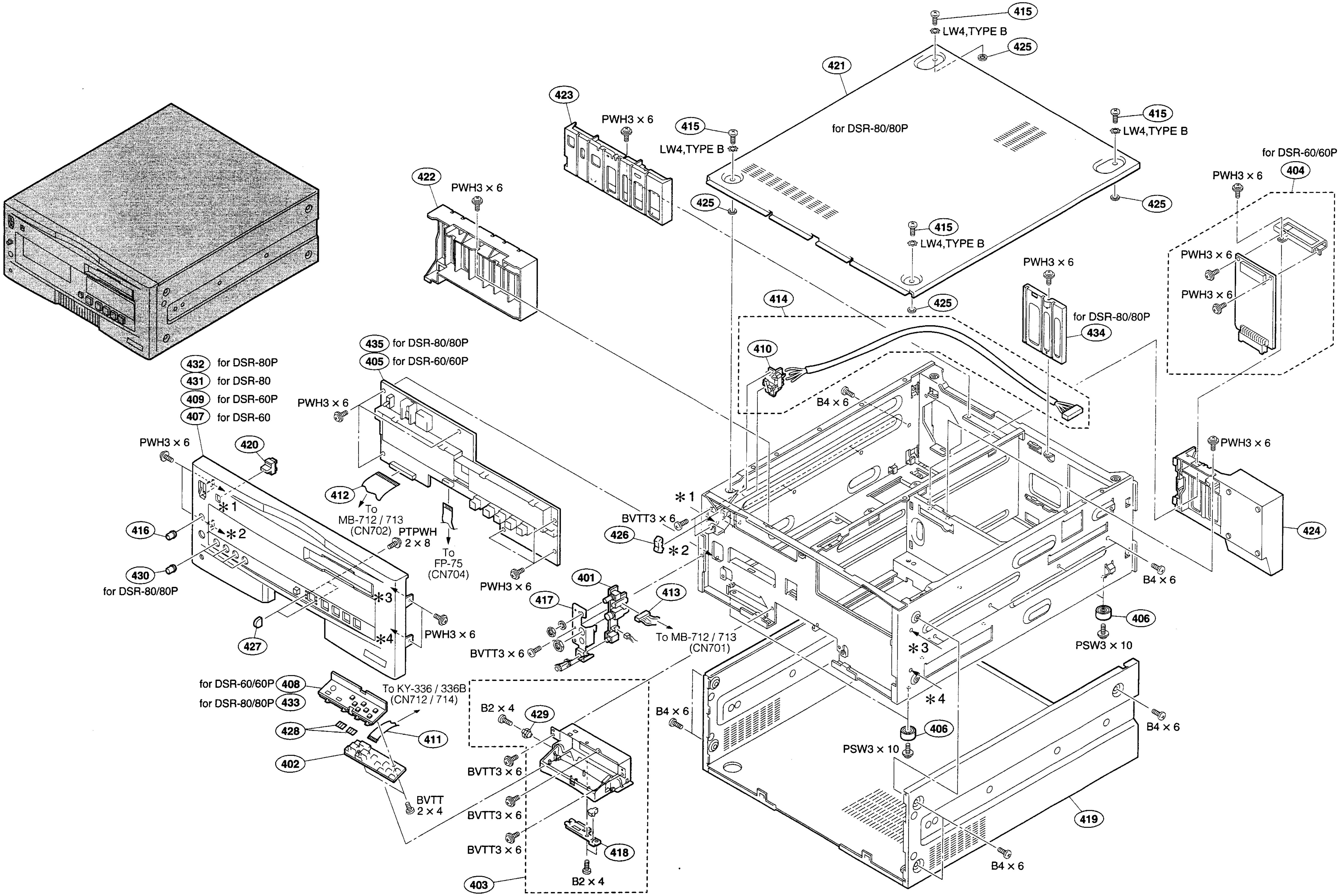

 CASSETTE COMPARTMENT ASSY & MB BOARD

CASSETTE COMPARTMENT ASSY & MB BOARD

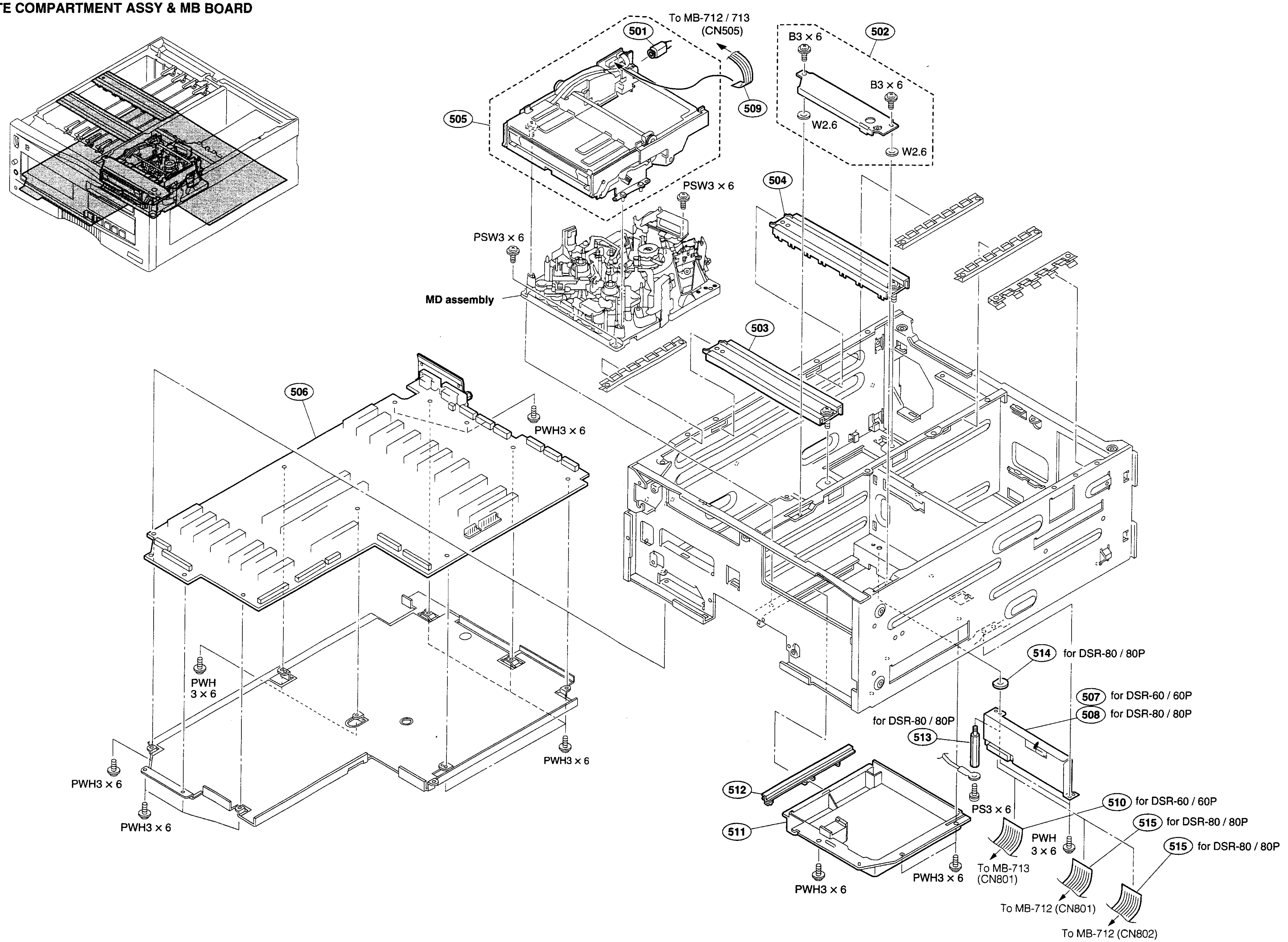

CASSETTE COMPARTMENT ASSY & MB BOARD

No.	Parts No.	SP	Description
501	A-8278-410-B	s	MOTOR ASS'Y
502	A-8278-444-B	o	CLAMP ASSY, CASECON
503	A-8278-503-B	o	CLAMP(LB) ASSY, PCB
504	A-8278-507-C	o	CLAMPER LC ASSY, PCB
505	A-8312-671-A	s	CASSETTE COMPARTMENT ASSY
506	A-8312-898-A	o	MOUNTED CIRCUIT BOARD, MB-713
507	A-8312-950-A	o	MOUNTED CIRCUIT BOARD, PRE-39 (FOR DSR-60/60P)
508	A-8315-287-A	o	MOUNTED CIRCUIT BOARD, PRE-34 (FOR DSR-80/80P)
509	1-777-533-11	s	WIRE (FLAT TYPE) (13 CORE)
510	1-782-418-11	s	WIRE (FLAT CABLE) (14 CORE) (FOR DSR-60/60P)
511	3-605-824-04	o	CASE, BOTTOM
512	3-605-825-01	o	CASE HOLDER, BOTTOM
513	3-608-822-02	o	SHAFT, RM (FOR DSR-80/80P)
514	3-608-823-02	o	RUBBER, WASHER (FOR DSR-80/80P)
515	1-782-419-11	s	WIRE (FLAT TYPE)(22 CORE) (FOR DSR-80/80P)

CARD RACK BLOCK

No.	Parts No.	SP	Description
601	A-8312-944-A	o	MOUNTED CIRCUIT BOARD, SV-184
602	A-8312-949-B	o	MOUNTED CIRCUIT BOARD, DV-17(FOR J,UC)
603	A-8312-953-A	o	MOUNTED CIRCUIT BOARD, SY-241B
604	A-8312-954-A	o	MOUNTED CIRCUIT BOARD, IO-149B(FOR J,UC)
605	A-8312-962-A	o	MOUNTED CIRCUIT BOARD, IO-149C(FOR CE)
606	A-8312-964-A	o	MOUNTED CIRCUIT BOARD, DV-17A(FOR CE)
607	3-179-084-01	s	LEVER (R), PC BOARD
608	3-179-085-01	s	LEVER (L), PC BOARD

CARD RACK BLOCK

DSR-60/60P

CARD RACK BLOCK

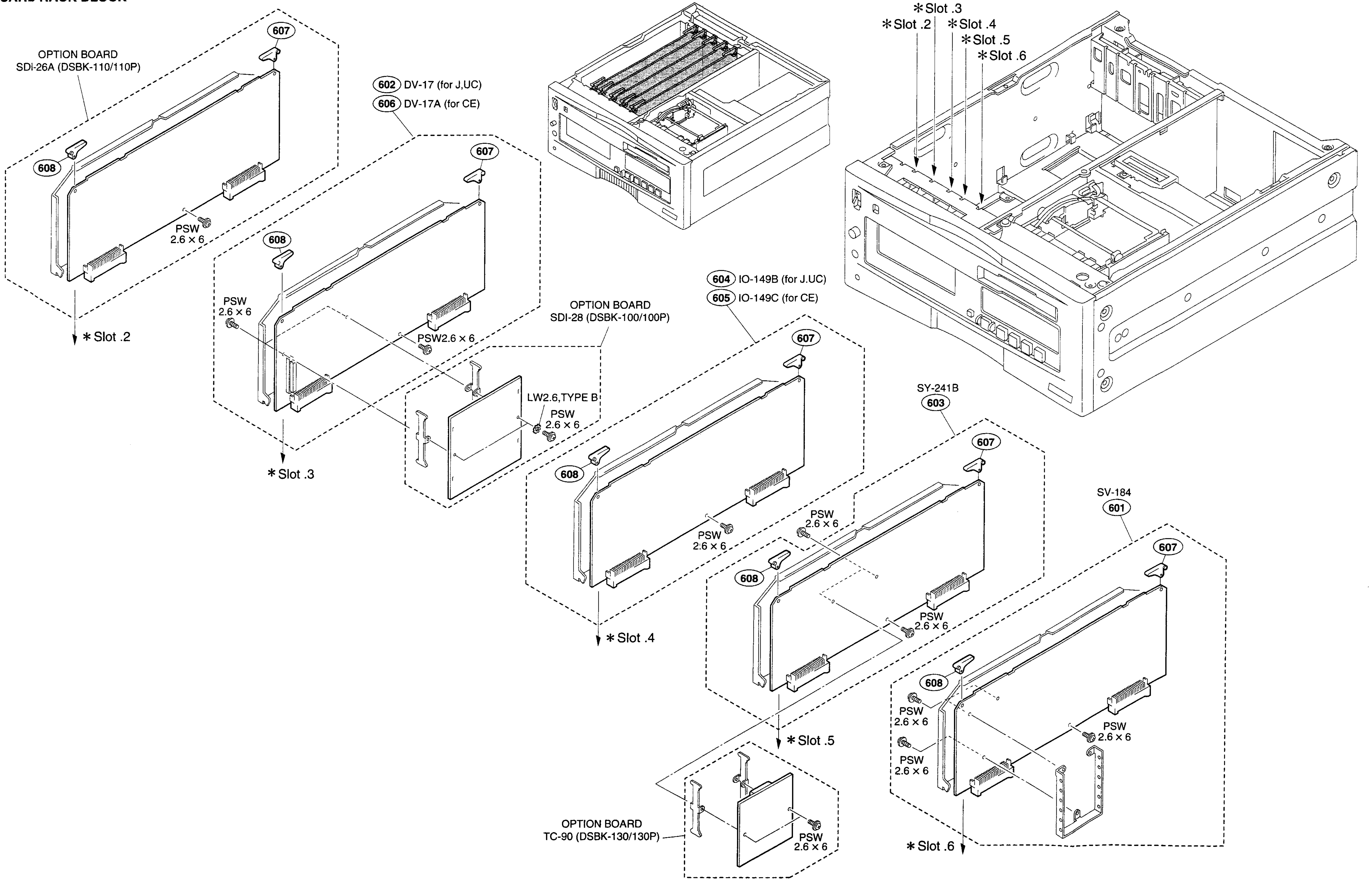

DSR-80/80P

CARD RACK BLOCK

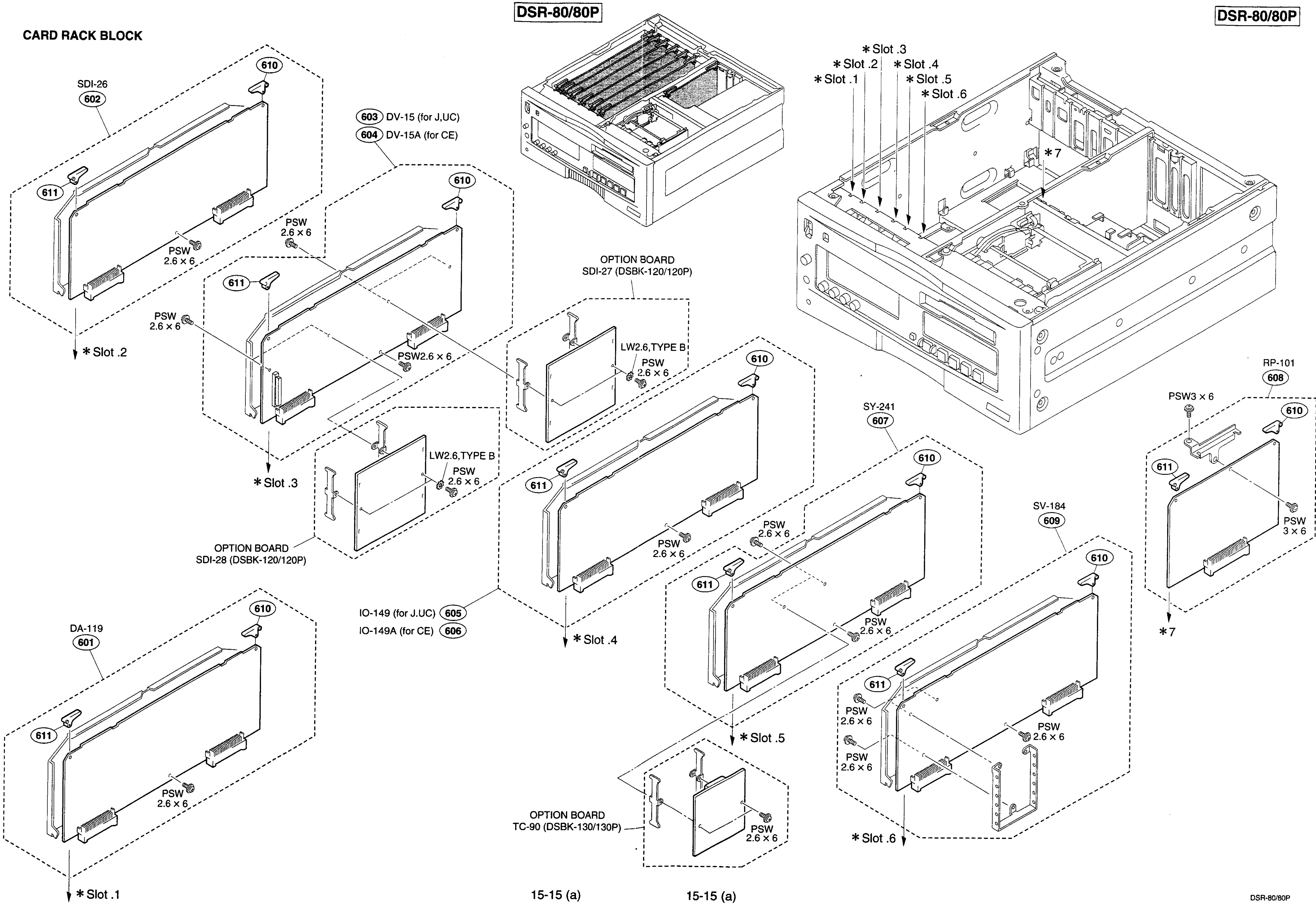

SONY-SP0754 / DRUCK 512

CARD RACK BLOCK

No.	Parts No.	SP	Description
601	A-8315-280-B	o	MOUNTED CIRCUIT BOARD, DA-119
602	A-8315-281-A	o	MOUNTED CIRCUIT BOARD, SDI-26
603	A-8315-282-A	o	MOUNTED CIRCUIT BOARD, DV-15(FOR J,UC)
604	A-8315-301-A	o	MOUNTED CIRCUIT BOARD, DV-15A(FOR CE)
605	A-8315-283-A	o	MOUNTED CIRCUIT BOARD, IO-149(FOR J,UC)
606	A-8315-293-A	o	MOUNTED CIRCUIT BOARD, IO-149A(FOR CE)
607	A-8315-284-A	o	MOUNTED CIRCUIT BOARD, SY-241
608	A-8315-285-A	o	MOUNTED CIRCUIT BOARD, RP-101
609	A-8312-944-A	o	MOUNTED CIRCUIT BOARD, SV-184
610	3-179-084-01	s	LEVER(R), PC BOARD
611	3-179-085-01	s	LEVER(L), PC BOARD

SWITCHING REGULATOR & REAR PANEL BLOCK

No.	Parts No.	SP	Description
701	A-8312-904-A	o	MOUNTED CIRCUIT BOARD, CP-281B (FOR UC,CE)
702	A-8312-905-A	o	MOUNTED CIRCUIT BOARD, CP-281C (FOR J)
703	A-8312-907-A	o	MOUNTED CIRCUIT BOARD, CP-276B
704	⚠ 1-468-214-12	s	REGULATOR, SWITCHING (FOR J,UC)
705	⚠ 1-468-214-22	s	REGULATOR, SWITCHING (FOR CE)
706	1-570-157-51	s	SWITCH, SLIDE
707	1-573-590-13	s	CONNECTOR, (S) TERMINAL 4P
708	1-750-785-11	s	CONNECTOR (XLR TYPE) 3P (FOR UC,CE)
709	1-750-786-11	s	CONNECTOR (XLR TYPE) 3P (FOR J)
710	1-750-881-11	s	CONVERTER, COAXIAL, CONNECTOR
711	1-764-448-11	s	CONVERTER, COAXIAL, CONNECTOR
712	1-766-596-11	s	JACK, PIN 1P
713	1-777-529-11	s	CABLE ASSY, COAXIAL (BLACK)
714	1-777-529-21	s	CABLE ASSY, COAXIAL (RED)
715	1-777-529-41	s	CABLE ASSY, COAXIAL (YELLOW)
716	1-778-665-11	s	CONNECTOR, BNC (RECEPTACLE)
717	1-778-665-21	s	CONNECTOR, BNC (RECEPTACLE)
718	3-606-319-02	o	PANEL (A), DI
719	3-606-326-02	o	PANEL (B), DI
720	3-606-334-02	o	PANEL(S), BLANK
721	3-606-343-01	o	PANEL REAR (FOR UC)
722	3-606-343-11	o	PANEL REAR (FOR CE)
723	3-606-343-21	o	PANEL, REAR (FOR J)

 SWITCHING REGULATOR & REAR PANEL BLOCK

 DSR-60/60P

SWITCHING REGULATOR & REAR PANEL BLOCK

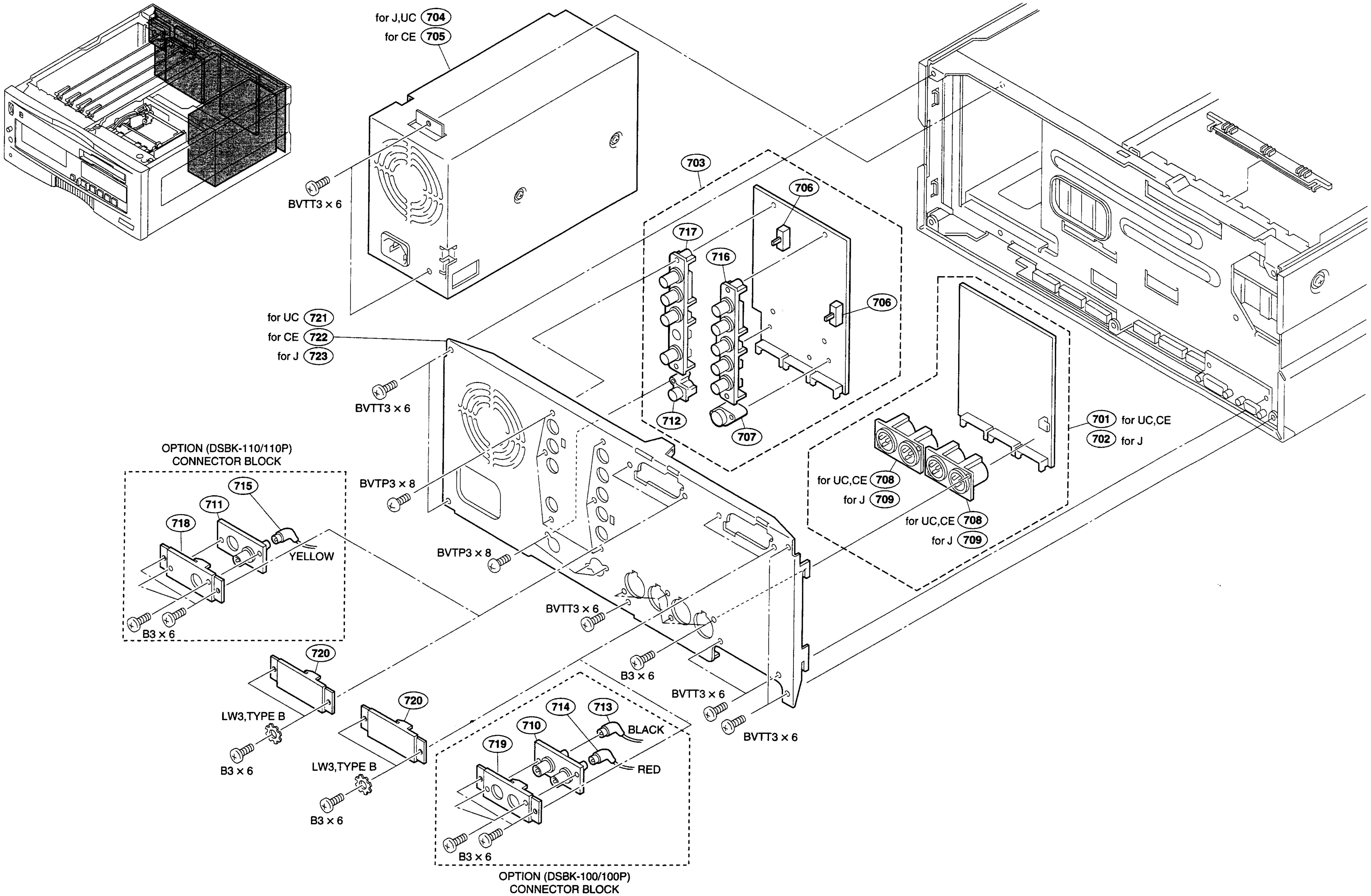

 15-17

 SWITCHING REGULATOR & REAR PANEL BLOCK

DSR-80/80P

SWITCHING REGULATOR & REAR PANEL BLOCK

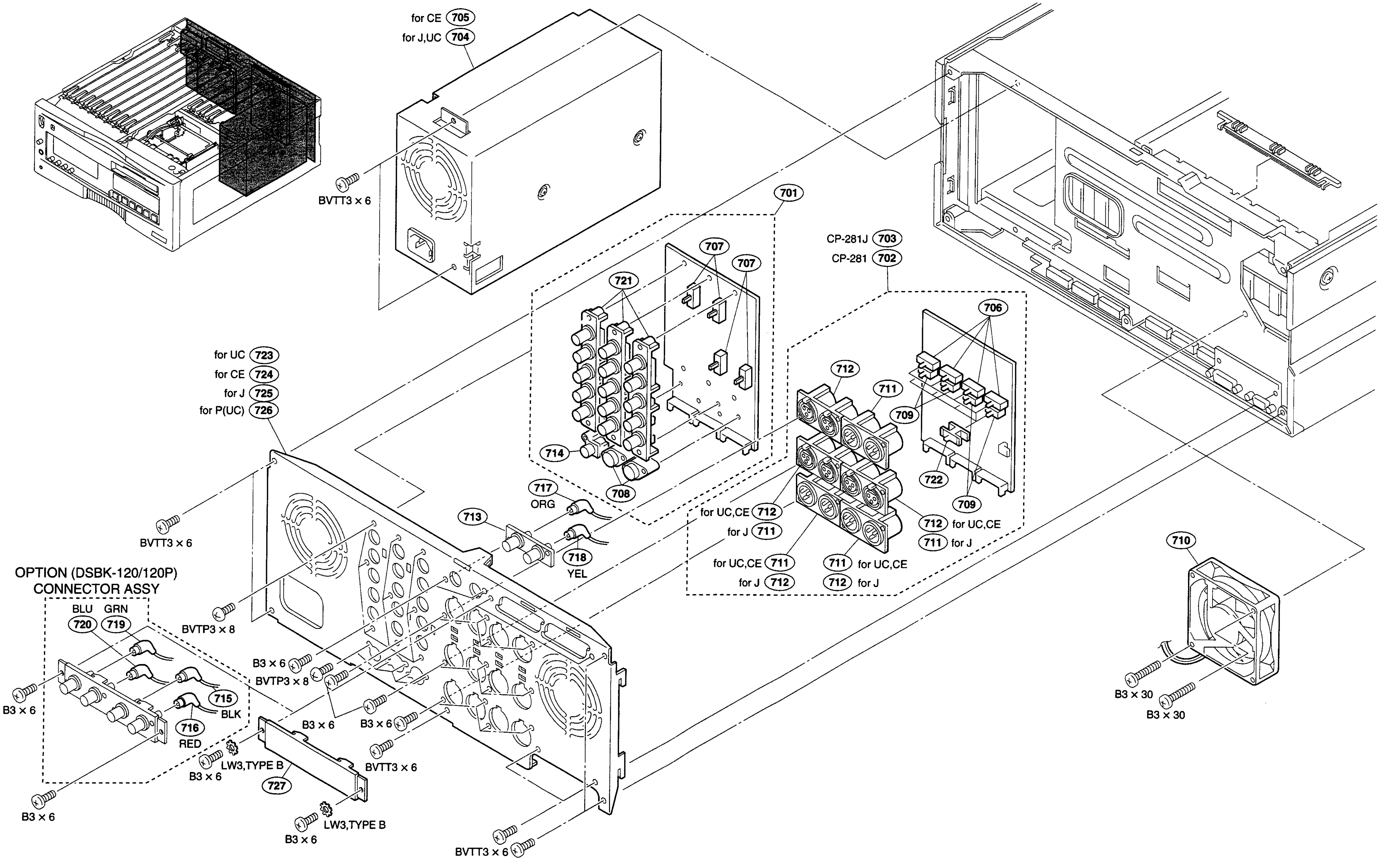

 15-17 (a)

SWITCHING REGULATOR & REAR PANEL BLOCK

No.	Parts No.	SP	Description
701	A-8312-906-A	o	MOUNTED CIRCUIT BOARD, CP-276A
702	A-8277-859-A	o	MOUNTED CIRCUIT BOARD, CP-281 (FOR UC,CE)
703	A-8311-077-A	o	MOUNTED CIRCUIT BOARD, CP-281J (FOR J)
704 ⚠	1-468-214-12	s	REGULATOR, SWITCHING (FOR J,UC)
705 ⚠	1-468-214-22	s	REGULATOR, SWITCHING (FOR CE)
706	1-570-157-41	s	SWITCH, SLIDE
707	1-570-157-51	s	SWITCH, SLIDE
708	1-573-590-13	s	CONNECTOR, (S) TERMINAL 4P
709	1-692-505-11	s	SWITCH, SLIDE
710	1-698-785-21	s	FAN, D.C.(80 SQUARE)
711	1-750-785-11	s	CONVERTER (XLR TYPE) 3P
712	1-750-786-11	s	CONVERTER (XLR TYPE) 3P
713	1-750-881-11	s	CONVERTER, COAXIAL CONNECTOR
714	1-766-596-11	s	JACK, PIN 1P
715	1-777-529-11	s	CABLE ASSY, COAXIAL (BLACK)
716	1-777-529-21	s	CABLE ASSY, COAXIAL (RED)
717	1-777-529-31	s	CABLE ASSY, COAXIAL (ORANGE)
718	1-777-529-41	s	CABLE ASSY, COAXIAL (YELLOW)
719	1-777-529-51	s	CABLE ASSY, COAXIAL (GREEN)
720	1-777-529-61	s	CABLE ASSY, COAXIAL (BLUE)
721	1-778-665-11	o	ADAPTOR, SW
722	3-171-450-01	o	ADAPTOR, SW
723	3-608-591-02	o	PANEL, REAR (FOR UC)
724	3-608-591-12	o	PANEL, REAR (FOR CE)
725	3-608-591-22	o	PANEL, REAR (FOR J)
726	3-608-591-32	o	PANEL, REAR (FOR DSR-80P UC)
727	3-605-643-02	o	PANEL, BLANK

15-3. ELECTRICAL PARTS LIST (DSR-60/60P)

CC-75 BOARD

Ref. No. or Q'ty	Part No.	SP	Description
C1	1-164-004-11	s	CERAMIC, CHIP 0.1uF 10% 25V
CN50	1-562-708-11	o	CONNECTOR, FPC 13P
CN51	1-580-472-11	s	CONNECTOR, FPC 5P
CN52	1-506-467-11	s	CONNECTOR 2P, MALE
PH1	8-719-991-24	s	PHOTO-INTERRUPTER GP1S23
PH2	8-719-991-24	s	PHOTO-INTERRUPTER GP1S23
PH3	8-719-991-24	s	PHOTO-INTERRUPTER GP1S23
R1	1-216-031-00	s	METAL, CHIP 180 5% 1/10W
R2	1-216-031-00	s	METAL, CHIP 180 5% 1/10W
R3	1-216-031-00	s	METAL, CHIP 180 5% 1/10W

CC-76 BOARD

Ref. No. or Q'ty	Part No.	SP	Description
CN53	1-750-248-21	o	CONNECTOR, FPC 5P
PH1	8-719-948-58	s	PHOTO-INTERRUPTER GP2S07B
PH2	8-719-948-58	s	PHOTO-INTERRUPTER GP2S07B
PH3	8-719-948-58	s	PHOTO-INTERRUPTER GP2S07B
R1	1-216-031-00	s	METAL, CHIP 180 5% 1/10W
R2	1-216-031-00	s	METAL, CHIP 180 5% 1/10W
R3	1-216-031-00	s	METAL, CHIP 180 5% 1/10W

CP-276B BOARD

Ref. No. or Q'ty	Part No.	SP	Description
1pc	A-8312-907-A	o	MOUNTED CIRCUIT BOARD, CP-276B
C1	1-126-933-11	s	ELECT 100uF 20% 16V
C4	1-163-809-11	s	CERAMIC, CHIP 0.047uF 10% 25V
C5	1-163-809-11	s	CERAMIC, CHIP 0.047uF 10% 25V
C6	1-163-809-11	s	CERAMIC, CHIP 0.047uF 10% 25V
C7	1-163-809-11	s	CERAMIC, CHIP 0.047uF 10% 25V
C8	1-163-809-11	s	CERAMIC, CHIP 0.047uF 10% 25V
CN1	1-778-665-21	s	CONNECTOR, BNC, FEMALE
CN3	1-778-665-11	s	CONNECTOR, BNC, FEMALE
CN4	1-766-596-11	s	JACK, PIN 1P, FEMALE
CN6	1-573-590-13	s	CONNECTOR, CIRCULAR 4P(S), FEMALE
CN601	1-766-790-11	o	CONNECTOR, BB 12P, MALE
CN602	1-766-790-11	o	CONNECTOR, BB 12P, MALE
CN603	1-766-790-11	o	CONNECTOR, BB 12P, MALE
FL4	1-236-129-11	s	FILTER, NOISE
FL5	1-236-129-11	s	FILTER, NOISE
FL6	1-236-129-11	s	FILTER, NOISE
FL7	1-236-129-11	s	FILTER, NOISE
FL8	1-236-129-11	s	FILTER, NOISE
FL9	1-236-129-11	s	FILTER, NOISE
FL10	1-236-129-11	s	FILTER, NOISE
FL14	1-236-129-11	s	FILTER, NOISE
FL15	1-236-129-11	s	FILTER, NOISE
FL16	1-236-129-11	s	FILTER, NOISE
Q2	8-729-907-46	s	TRANSISTOR IMZ1
Q3	8-729-904-41	s	TRANSISTOR FMY3
R1	1-216-624-11	s	METAL, CHIP 75 0.5% 1/10W
R5	1-216-025-91	s	METAL, CHIP 100 5% 1/10W
R6	1-216-077-00	s	METAL, CHIP 15k 5% 1/10W
R11	1-216-081-00	s	METAL, CHIP 22k 5% 1/10W
R12	1-216-069-00	s	METAL, CHIP 6.8k 5% 1/10W
R16	1-216-079-00	s	METAL, CHIP 18k 5% 1/10W
R17	1-216-059-00	s	METAL, CHIP 2.7k 5% 1/10W
R18	1-216-045-00	s	METAL, CHIP 680 5% 1/10W
R19	1-216-009-00	s	METAL, CHIP 22 5% 1/10W
S1	1-570-157-51	s	SWITCH, SLIDE
S4	1-570-157-51	s	SWITCH, SLIDE

CP-281B BOARD(For UC/CE)

Ref. No. or Q'ty	Part No.	SP	Description
1pc	A-8312-904-A	o	MOUNTED CIRCUIT BOARD, CP-281B
C51	1-126-935-11	s	ELECT 470uF 20% 16V
C52	1-126-935-11	s	ELECT 470uF 20% 16V
C61	1-126-935-11	s	ELECT 470uF 20% 16V
C62	1-126-935-11	s	ELECT 470uF 20% 16V
C71	1-126-935-11	s	ELECT 470uF 20% 16V
C72	1-126-935-11	s	ELECT 470uF 20% 16V
C81	1-126-935-11	s	ELECT 470uF 20% 16V
C82	1-126-935-11	s	ELECT 470uF 20% 16V
CN25	1-750-785-11	s	CONNECTOR, XLR 3P, MALE
CN26	1-750-785-11	s	CONNECTOR, XLR 3P, MALE
CN606	1-766-790-11	o	CONNECTOR, BB 12P, MALE
R52	1-216-295-91	s	RES, CHIP 0
R55	1-216-295-91	s	RES, CHIP 0
R62	1-216-295-91	s	RES, CHIP 0
R65	1-216-295-91	s	RES, CHIP 0
R72	1-216-295-91	s	RES, CHIP 0
R75	1-216-295-91	s	RES, CHIP 0
R82	1-216-295-91	s	RES, CHIP 0
R85	1-216-295-91	s	RES, CHIP 0

CP-281C BOARD(For J)

Ref. No. or Q'ty	Part No.	SP	Description
1pc	A-8312-905-A	o	MOUNTED CIRCUIT BOARD, CP-281C
C51	1-126-935-11	s	ELECT 470uF 20% 16V
C52	1-126-935-11	s	ELECT 470uF 20% 16V
C61	1-126-935-11	s	ELECT 470uF 20% 16V
C62	1-126-935-11	s	ELECT 470uF 20% 16V
C71	1-126-935-11	s	ELECT 470uF 20% 16V
C72	1-126-935-11	s	ELECT 470uF 20% 16V
C81	1-126-935-11	s	ELECT 470uF 20% 16V
C82	1-126-935-11	s	ELECT 470uF 20% 16V
CN25	1-750-786-11	s	CONNECTOR, XLR 3P, FEMALE
CN26	1-750-786-11	s	CONNECTOR, XLR 3P, FEMALE
CN606	1-766-790-11	o	CONNECTOR, BB 12P, MALE
R13	1-216-295-91	s	RES, CHIP 0
R14	1-216-295-91	s	RES, CHIP 0
R23	1-216-295-91	s	RES, CHIP 0
R24	1-216-295-91	s	RES, CHIP 0
R33	1-216-295-91	s	RES, CHIP 0
R34	1-216-295-91	s	RES, CHIP 0
R43	1-216-295-91	s	RES, CHIP 0
R44	1-216-295-91	s	RES, CHIP 0
R53	1-216-295-91	s	RES, CHIP 0
R54	1-216-295-91	s	RES, CHIP 0
R63	1-216-295-91	s	RES, CHIP 0
R64	1-216-295-91	s	RES, CHIP 0
R73	1-216-295-91	s	RES, CHIP 0
R84	1-216-295-91	s	RES, CHIP 0
R83	1-216-295-91	s	RES, CHIP 0
R84	1-216-295-91	s	RES, CHIP 0

DV-17 BOARD(For NTSC); Suffix -13, 14

This list corresponds to the board suffix numbers -13 and 14.

Ref. No. or Q'ty	Part No.	SP	Description
1pc	A-8312-949-B	s	MOUNTED CIRCUIT BOARD, DV-17
1pc	7-621-759-45	s	+PSW, 2.6x6
1pc	3-179-084-01	s	LEVER (R), PRINTED CIRCUIT BOARD
1pc	3-179-085-01	s	LEVER (L), PRINTED CIRCUIT BOARD
C10	1-163-038-91	s	CERAMIC, CHIP 0.1uF 25V
C11	1-163-038-91	s	CERAMIC, CHIP 0.1uF 25V
C12	1-163-038-91	s	CERAMIC, CHIP 0.1uF 25V
C13	1-163-038-91	s	CERAMIC, CHIP 0.1uF 25V
C14	1-163-038-91	s	CERAMIC, CHIP 0.1uF 25V
C15	1-163-038-91	s	CERAMIC, CHIP 0.1uF 25V
C16	1-163-251-11	s	CERAMIC, CHIP 100pF 5% 50V
C17	1-163-251-11	s	CERAMIC, CHIP 100pF 5% 50V
C18	1-126-394-11	s	ELECT, CHIP 10uF 20% 16V
C19	1-126-394-11	s	ELECT, CHIP 10uF 20% 16V
C20	1-126-394-11	s	ELECT, CHIP 10uF 20% 16V
C21	1-126-394-11	s	ELECT, CHIP 10uF 20% 16V
C22	1-163-038-91	s	CERAMIC, CHIP 0.1uF 25V
C23	1-163-038-91	s	CERAMIC, CHIP 0.1uF 25V
C24	1-163-038-91	s	CERAMIC, CHIP 0.1uF 25V
C27	1-163-038-91	s	CERAMIC, CHIP 0.1uF 25V
C28	1-163-038-91	s	CERAMIC, CHIP 0.1uF 25V
C29	1-163-038-91	s	CERAMIC, CHIP 0.1uF 25V
C30	1-126-396-11	s	ELECT, CHIP 47uF 20% 16V
C31	1-126-394-11	s	ELECT, CHIP 10uF 20% 16V
C32	1-126-394-11	s	ELECT, CHIP 10uF 20% 16V
C33	1-126-396-11	s	ELECT, CHIP 47uF 20% 16V
C101	1-163-038-91	s	CERAMIC, CHIP 0.1uF 25V
C102	1-163-038-91	s	CERAMIC, CHIP 0.1uF 25V
C103	1-163-038-91	s	CERAMIC, CHIP 0.1uF 25V
C104	1-163-038-91	s	CERAMIC, CHIP 0.1uF 25V
C105	1-163-038-91	s	CERAMIC, CHIP 0.1uF 25V
C106	1-163-038-91	s	CERAMIC, CHIP 0.1uF 25V
C107	1-163-227-11	s	CERAMIC, CHIP 10pF 5% 50V
C108	1-163-038-91	s	CERAMIC, CHIP 0.1uF 25V
C109	1-163-038-91	s	CERAMIC, CHIP 0.1uF 25V
C110	1-126-394-11	s	ELECT, CHIP 10uF 20% 16V
C111	1-163-038-91	s	CERAMIC, CHIP 0.1uF 25V
C112	1-163-038-91	s	CERAMIC, CHIP 0.1uF 25V
C113	1-163-038-91	s	CERAMIC, CHIP 0.1uF 25V
C114	1-163-038-91	s	CERAMIC, CHIP 0.1uF 25V
C115	1-163-038-91	s	CERAMIC, CHIP 0.1uF 25V
C116	1-163-038-91	s	CERAMIC, CHIP 0.1uF 25V
C117	1-163-038-91	s	CERAMIC, CHIP 0.1uF 25V
C118	1-163-038-91	s	CERAMIC, CHIP 0.1uF 25V
C119	1-163-038-91	s	CERAMIC, CHIP 0.1uF 25V
C121	1-163-038-91	s	CERAMIC, CHIP 0.1uF 25V
C123	1-163-038-91	s	CERAMIC, CHIP 0.1uF 25V
C124	1-163-038-91	s	CERAMIC, CHIP 0.1uF 25V
C125	1-163-038-91	s	CERAMIC, CHIP 0.1uF 25V
C126	1-163-038-91	s	CERAMIC, CHIP 0.1uF 25V
C127	1-163-038-91	s	CERAMIC, CHIP 0.1uF 25V
C128	1-163-038-91	s	CERAMIC, CHIP 0.1uF 25V
C129	1-126-396-11	s	ELECT, CHIP 47uF 20% 16V
C130	1-163-038-91	s	CERAMIC, CHIP 0.1uF 25V
C132	1-163-038-91	s	CERAMIC, CHIP 0.1uF 25V

(DV-17 BOARD(For NTSC); Suffix -13, 14)

Ref. No. or Q'ty	Part No.	SP	Description
C133	1-163-038-91	s	CERAMIC, CHIP 0.1uF 25V
C134	1-163-038-91	s	CERAMIC, CHIP 0.1uF 25V
C135	1-163-038-91	s	CERAMIC, CHIP 0.1uF 25V
C151	1-163-275-11	s	CERAMIC, CHIP 0.001uF 5% 50V
C153	1-163-038-91	s	CERAMIC, CHIP 0.1uF 25V
C154	1-126-396-11	s	ELECT, CHIP 47uF 20% 16V
C155	1-163-038-91	s	CERAMIC, CHIP 0.1uF 25V
C156	1-163-038-91	s	CERAMIC, CHIP 0.1uF 25V
C157	1-163-038-91	s	CERAMIC, CHIP 0.1uF 25V
C158	1-163-038-91	s	CERAMIC, CHIP 0.1uF 25V
C159	1-163-038-91	s	CERAMIC, CHIP 0.1uF 25V
C160	1-163-038-91	s	CERAMIC, CHIP 0.1uF 25V
C161	1-163-038-91	s	CERAMIC, CHIP 0.1uF 25V
C162	1-163-275-11	s	CERAMIC, CHIP 0.001uF 5% 50V
C163	1-163-275-11	s	CERAMIC, CHIP 0.001uF 5% 50V
C164	1-163-275-11	s	CERAMIC, CHIP 0.001uF 5% 50V
C165	1-104-760-11	s	CERAMIC, CHIP 0.047uF 10% 50V
C166	1-135-179-21	s	TANTALUM, CHIP 2.2uF 10% 16V
C167	1-163-038-91	s	CERAMIC, CHIP 0.1uF 25V
C168	1-163-038-91	s	CERAMIC, CHIP 0.1uF 25V
C169	1-163-038-91	s	CERAMIC, CHIP 0.1uF 25V
C170	1-163-038-91	s	CERAMIC, CHIP 0.1uF 25V
C171	1-163-231-11	s	CERAMIC, CHIP 15pF 5% 50V
C201	1-163-038-91	s	CERAMIC, CHIP 0.1uF 25V
C202	1-126-396-11	s	ELECT, CHIP 47uF 20% 16V
C203	1-163-038-91	s	CERAMIC, CHIP 0.1uF 25V
C204	1-163-038-91	s	CERAMIC, CHIP 0.1uF 25V
C205	1-163-038-91	s	CERAMIC, CHIP 0.1uF 25V
C206	1-163-038-91	s	CERAMIC, CHIP 0.1uF 25V
C207	1-163-038-91	s	CERAMIC, CHIP 0.1uF 25V
C209	1-163-038-91	s	CERAMIC, CHIP 0.1uF 25V
C210	1-163-038-91	s	CERAMIC, CHIP 0.1uF 25V
C211	1-163-038-91	s	CERAMIC, CHIP 0.1uF 25V
C212	1-163-038-91	s	CERAMIC, CHIP 0.1uF 25V
C213	1-163-038-91	s	CERAMIC, CHIP 0.1uF 25V
C214	1-163-038-91	s	CERAMIC, CHIP 0.1uF 25V
C218	1-163-038-91	s	CERAMIC, CHIP 0.1uF 25V
C219	1-163-038-91	s	CERAMIC, CHIP 0.1uF 25V
C220	1-163-038-91	s	CERAMIC, CHIP 0.1uF 25V
C221	1-163-038-91	s	CERAMIC, CHIP 0.1uF 25V
C222	1-163-038-91	s	CERAMIC, CHIP 0.1uF 25V
C224	1-163-038-91	s	CERAMIC, CHIP 0.1uF 25V
C225	1-163-038-91	s	CERAMIC, CHIP 0.1uF 25V
C226	1-126-396-11	s	ELECT, CHIP 47uF 20% 16V
C228	1-163-038-91	s	CERAMIC, CHIP 0.1uF 25V
C229	1-163-038-91	s	CERAMIC, CHIP 0.1uF 25V
C252	1-163-038-91	s	CERAMIC, CHIP 0.1uF 25V
C254	1-163-038-91	s	CERAMIC, CHIP 0.1uF 25V
C255	1-163-038-91	s	CERAMIC, CHIP 0.1uF 25V
C256	1-163-038-91	s	CERAMIC, CHIP 0.1uF 25V
C257	1-163-038-91	s	CERAMIC, CHIP 0.1uF 25V
C258	1-163-038-91	s	CERAMIC, CHIP 0.1uF 25V
C259	1-163-038-91	s	CERAMIC, CHIP 0.1uF 25V
C260	1-163-038-91	s	CERAMIC, CHIP 0.1uF 25V
C261	1-163-038-91	s	CERAMIC, CHIP 0.1uF 25V
C262	1-163-038-91	s	CERAMIC, CHIP 0.1uF 25V
C263	1-163-038-91	s	CERAMIC, CHIP 0.1uF 25V
C264	1-163-038-91	s	CERAMIC, CHIP 0.1uF 25V
C265	1-163-038-91	s	CERAMIC, CHIP 0.1uF 25V

(DV-17 BOARD(For NTSC); Suffix -13, 14)

Ref. No. or Q'ty	Part No.	SP	Description
C266	1-163-038-91	s	CERAMIC, CHIP 0.1uF 25V
C267	1-163-038-91	s	CERAMIC, CHIP 0.1uF 25V
C268	1-163-038-91	s	CERAMIC, CHIP 0.1uF 25V
C269	1-163-038-91	s	CERAMIC, CHIP 0.1uF 25V
C270	1-163-038-91	s	CERAMIC, CHIP 0.1uF 25V
C272	1-163-038-91	s	CERAMIC, CHIP 0.1uF 25V
C301	1-163-038-91	s	CERAMIC, CHIP 0.1uF 25V
C302	1-163-038-91	s	CERAMIC, CHIP 0.1uF 25V
C303	1-163-038-91	s	CERAMIC, CHIP 0.1uF 25V
C304	1-163-038-91	s	CERAMIC, CHIP 0.1uF 25V
C305	1-163-038-91	s	CERAMIC, CHIP 0.1uF 25V
C306	1-163-038-91	s	CERAMIC, CHIP 0.1uF 25V
C307	1-163-038-91	s	CERAMIC, CHIP 0.1uF 25V
C308	1-163-038-91	s	CERAMIC, CHIP 0.1uF 25V
C309	1-163-038-91	s	CERAMIC, CHIP 0.1uF 25V
C310	1-163-038-91	s	CERAMIC, CHIP 0.1uF 25V
C312	1-163-235-11	s	CERAMIC, CHIP 22pF 5% 50V
C313	1-126-396-11	s	ELECT, CHIP 47uF 20% 16V
C315	1-163-038-91	s	CERAMIC, CHIP 0.1uF 25V
C316	1-163-038-91	s	CERAMIC, CHIP 0.1uF 25V
C317	1-163-038-91	s	CERAMIC, CHIP 0.1uF 25V
C318	1-163-038-91	s	CERAMIC, CHIP 0.1uF 25V
C319	1-163-038-91	s	CERAMIC, CHIP 0.1uF 25V
C321	1-164-346-11	s	CERAMIC, CHIP 1uF 16V
C322	1-107-687-11	s	TANTALUM, CHIP 3.3uF 20% 20V
C323	1-107-687-11	s	TANTALUM, CHIP 3.3uF 20% 20V
C324	1-163-038-91	s	CERAMIC, CHIP 0.1uF 25V
C325	1-163-038-91	s	CERAMIC, CHIP 0.1uF 25V
C326	1-163-038-91	s	CERAMIC, CHIP 0.1uF 25V
C327	1-163-038-91	s	CERAMIC, CHIP 0.1uF 25V
C328	1-163-038-91	s	CERAMIC, CHIP 0.1uF 25V
C329	1-163-038-91	s	CERAMIC, CHIP 0.1uF 25V
C330	1-163-038-91	s	CERAMIC, CHIP 0.1uF 25V
C331	1-163-251-11	s	CERAMIC, CHIP 100pF 5% 50V
C332	1-163-038-91	s	CERAMIC, CHIP 0.1uF 25V
C333	1-163-251-11	s	CERAMIC, CHIP 100pF 5% 50V
C334	1-163-038-91	s	CERAMIC, CHIP 0.1uF 25V
C335	1-163-038-91	s	CERAMIC, CHIP 0.1uF 25V
C336	1-163-275-11	s	CERAMIC, CHIP 0.001uF 5% 50V
C337	1-163-275-11	s	CERAMIC, CHIP 0.001uF 5% 50V
C338	1-163-275-11	s	CERAMIC, CHIP 0.001uF 5% 50V
C339	1-163-275-11	s	CERAMIC, CHIP 0.001uF 5% 50V
C340	1-163-038-91	s	CERAMIC, CHIP 0.1uF 25V
C341	1-163-038-91	s	CERAMIC, CHIP 0.1uF 25V
C342	1-163-038-91	s	CERAMIC, CHIP 0.1uF 25V
C343	1-163-038-91	s	CERAMIC, CHIP 0.1uF 25V
C344	1-163-038-91	s	CERAMIC, CHIP 0.1uF 25V
C345	1-163-038-91	s	CERAMIC, CHIP 0.1uF 25V
C346	1-163-038-91	s	CERAMIC, CHIP 0.1uF 25V
C347	1-163-038-91	s	CERAMIC, CHIP 0.1uF 25V
C348	1-163-038-91	s	CERAMIC, CHIP 0.1uF 25V
C351	1-163-038-91	s	CERAMIC, CHIP 0.1uF 25V
C353	1-163-038-91	s	CERAMIC, CHIP 0.1uF 25V
C354	1-163-038-91	s	CERAMIC, CHIP 0.1uF 25V
C355	1-163-038-91	s	CERAMIC, CHIP 0.1uF 25V
C356	1-163-038-91	s	CERAMIC, CHIP 0.1uF 25V
C357	1-163-038-91	s	CERAMIC, CHIP 0.1uF 25V
C358	1-163-038-91	s	CERAMIC, CHIP 0.1uF 25V
C359	1-163-038-91	s	CERAMIC, CHIP 0.1uF 25V

(DV-17 BOARD(For NTSC); Suffix -13, 14)

Ref. No. or Q'ty	Part No.	SP	Description
C360	1-163-038-91	s	CERAMIC, CHIP 0.1uF 25V
C361	1-163-038-91	s	CERAMIC, CHIP 0.1uF 25V
C362	1-163-038-91	s	CERAMIC, CHIP 0.1uF 25V
C363	1-163-038-91	s	CERAMIC, CHIP 0.1uF 25V
C364	1-126-396-11	s	ELECT, CHIP 47uF 20% 16V
C366	1-163-038-91	s	CERAMIC, CHIP 0.1uF 25V
C367	1-163-038-91	s	CERAMIC, CHIP 0.1uF 25V
C368	1-163-038-91	s	CERAMIC, CHIP 0.1uF 25V
C369	1-163-038-91	s	CERAMIC, CHIP 0.1uF 25V
C370	1-163-038-91	s	CERAMIC, CHIP 0.1uF 25V
C371	1-163-038-91	s	CERAMIC, CHIP 0.1uF 25V
C372	1-163-038-91	s	CERAMIC, CHIP 0.1uF 25V
C373	1-163-038-91	s	CERAMIC, CHIP 0.1uF 25V
C375	1-163-038-91	s	CERAMIC, CHIP 0.1uF 25V
C376	1-163-038-91	s	CERAMIC, CHIP 0.1uF 25V
C378	1-163-038-91	s	CERAMIC, CHIP 0.1uF 25V
C379	1-163-038-91	s	CERAMIC, CHIP 0.1uF 25V
C381	1-126-396-11	s	ELECT, CHIP 47uF 20% 16V
C382	1-126-396-11	s	ELECT, CHIP 47uF 20% 16V
C383	1-163-038-91	s	CERAMIC, CHIP 0.1uF 25V
C384	1-163-038-91	s	CERAMIC, CHIP 0.1uF 25V
C385	1-163-038-91	s	CERAMIC, CHIP 0.1uF 25V
C386	1-163-038-91	s	CERAMIC, CHIP 0.1uF 25V
C387	1-126-396-11	s	ELECT, CHIP 47uF 20% 16V
C388	1-163-038-91	s	CERAMIC, CHIP 0.1uF 25V
C389	1-163-038-91	s	CERAMIC, CHIP 0.1uF 25V
C390	1-126-396-11	s	ELECT, CHIP 47uF 20% 16V
C391	1-163-038-91	s	CERAMIC, CHIP 0.1uF 25V
C392	1-163-038-91	s	CERAMIC, CHIP 0.1uF 25V
C401	1-163-259-91	s	CERAMIC, CHIP 220pF 5% 50V
C402	1-163-259-91	s	CERAMIC, CHIP 220pF 5% 50V
C403	1-163-251-11	s	CERAMIC, CHIP 100pF 5% 50V
C404	1-163-251-11	s	CERAMIC, CHIP 100pF 5% 50V
C405	1-163-139-00	s	CERAMIC, CHIP 820pF 5% 50V
C406	1-163-251-11	s	CERAMIC, CHIP 100pF 5% 50V
C407	1-126-396-11	s	ELECT, CHIP 47uF 20% 16V
C408	1-163-251-11	s	CERAMIC, CHIP 100pF 5% 50V
C409	1-126-400-11	s	ELECT, CHIP 22uF 20% 35V
C410	1-126-400-11	s	ELECT, CHIP 22uF 20% 35V
C411	1-163-235-11	s	CERAMIC, CHIP 22pF 5% 50V
C412	1-163-235-11	s	CERAMIC, CHIP 22pF 5% 50V
C413	1-126-400-11	s	ELECT, CHIP 22uF 20% 35V
C414	1-163-251-11	s	CERAMIC, CHIP 100pF 5% 50V
C415	1-163-251-11	s	CERAMIC, CHIP 100pF 5% 50V
C417	1-126-400-11	s	ELECT, CHIP 22uF 20% 35V
C419	1-126-394-11	s	ELECT, CHIP 10uF 20% 16V
C420	1-126-394-11	s	ELECT, CHIP 10uF 20% 16V
C421	1-163-275-11	s	CERAMIC, CHIP 0.001uF 5% 50V
C422	1-163-038-91	s	CERAMIC, CHIP 0.1uF 25V
C423	1-163-038-91	s	CERAMIC, CHIP 0.1uF 25V
C424	1-163-038-91	s	CERAMIC, CHIP 0.1uF 25V
C425	1-163-235-11	s	CERAMIC, CHIP 22pF 5% 50V
C501	1-163-259-91	s	CERAMIC, CHIP 220pF 5% 50V
C502	1-163-259-91	s	CERAMIC, CHIP 220pF 5% 50V
C503	1-163-251-11	s	CERAMIC, CHIP 100pF 5% 50V
C504	1-163-251-11	s	CERAMIC, CHIP 100pF 5% 50V
C505	1-163-139-00	s	CERAMIC, CHIP 820pF 5% 50V
C506	1-163-251-11	s	CERAMIC, CHIP 100pF 5% 50V
C507	1-126-396-11	s	ELECT, CHIP 47uF 20% 16V

(DV-17 BOARD(For NTSC); Suffix -13, 14)

Ref. No. or Q'ty	Part No.	SP	Description
C508	1-163-251-11	s	CERAMIC, CHIP 100pF 5% 50V
C509	1-126-400-11	s	ELECT, CHIP 22uF 20% 35V
C510	1-126-400-11	s	ELECT, CHIP 22uF 20% 35V
C511	1-163-235-11	s	CERAMIC, CHIP 22pF 5% 50V
C512	1-163-235-11	s	CERAMIC, CHIP 22pF 5% 50V
C513	1-126-400-11	s	ELECT, CHIP 22uF 20% 35V
C514	1-163-251-11	s	CERAMIC, CHIP 100pF 5% 50V
C515	1-163-251-11	s	CERAMIC, CHIP 100pF 5% 50V
C517	1-126-400-11	s	ELECT, CHIP 22uF 20% 35V
C519	1-163-275-11	s	CERAMIC, CHIP 0.001uF 5% 50V
C520	1-126-394-11	s	ELECT, CHIP 10uF 20% 16V
C521	1-126-394-11	s	ELECT, CHIP 10uF 20% 16V
C522	1-163-038-91	s	CERAMIC, CHIP 0.1uF 25V
C523	1-163-038-91	s	CERAMIC, CHIP 0.1uF 25V
C524	1-163-038-91	s	CERAMIC, CHIP 0.1uF 25V
C525	1-163-235-11	s	CERAMIC, CHIP 22pF 5% 50V
C601	1-163-259-91	s	CERAMIC, CHIP 220pF 5% 50V
C602	1-163-259-91	s	CERAMIC, CHIP 220pF 5% 50V
C603	1-163-251-11	s	CERAMIC, CHIP 100pF 5% 50V
C604	1-163-251-11	s	CERAMIC, CHIP 100pF 5% 50V
C605	1-163-139-00	s	CERAMIC, CHIP 820pF 5% 50V
C606	1-163-251-11	s	CERAMIC, CHIP 100pF 5% 50V
C607	1-126-396-11	s	ELECT, CHIP 47uF 20% 16V
C608	1-163-251-11	s	CERAMIC, CHIP 100pF 5% 50V
C609	1-126-400-11	s	ELECT, CHIP 22uF 20% 35V
C610	1-126-400-11	s	ELECT, CHIP 22uF 20% 35V
C611	1-163-235-11	s	CERAMIC, CHIP 22pF 5% 50V
C612	1-163-235-11	s	CERAMIC, CHIP 22pF 5% 50V
C613	1-126-400-11	s	ELECT, CHIP 22uF 20% 35V
C614	1-163-251-11	s	CERAMIC, CHIP 100pF 5% 50V
C615	1-163-251-11	s	CERAMIC, CHIP 100pF 5% 50V
C617	1-126-400-11	s	ELECT, CHIP 22uF 20% 35V
C619	1-163-275-11	s	CERAMIC, CHIP 0.001uF 5% 50V
C620	1-126-394-11	s	ELECT, CHIP 10uF 20% 16V
C621	1-126-394-11	s	ELECT, CHIP 10uF 20% 16V
C622	1-163-038-91	s	CERAMIC, CHIP 0.1uF 25V
C623	1-163-038-91	s	CERAMIC, CHIP 0.1uF 25V
C624	1-163-038-91	s	CERAMIC, CHIP 0.1uF 25V
C625	1-163-235-11	s	CERAMIC, CHIP 22pF 5% 50V
C701	1-163-259-91	s	CERAMIC, CHIP 220pF 5% 50V
C702	1-163-259-91	s	CERAMIC, CHIP 220pF 5% 50V
C703	1-163-251-11	s	CERAMIC, CHIP 100pF 5% 50V
C704	1-163-251-11	s	CERAMIC, CHIP 100pF 5% 50V
C705	1-163-139-00	s	CERAMIC, CHIP 820pF 5% 50V
C706	1-163-251-11	s	CERAMIC, CHIP 100pF 5% 50V
C707	1-126-396-11	s	ELECT, CHIP 47uF 20% 16V
C708	1-163-251-11	s	CERAMIC, CHIP 100pF 5% 50V
C709	1-126-400-11	s	ELECT, CHIP 22uF 20% 35V
C710	1-126-400-11	s	ELECT, CHIP 22uF 20% 35V
C711	1-163-235-11	s	CERAMIC, CHIP 22pF 5% 50V
C712	1-163-235-11	s	CERAMIC, CHIP 22pF 5% 50V
C713	1-126-400-11	s	ELECT, CHIP 22uF 20% 35V
C714	1-163-251-11	s	CERAMIC, CHIP 100pF 5% 50V
C715	1-163-251-11	s	CERAMIC, CHIP 100pF 5% 50V
C716	1-126-400-11	s	ELECT, CHIP 22uF 20% 35V
C719	1-163-275-11	s	CERAMIC, CHIP 0.001uF 5% 50V
C720	1-126-394-11	s	ELECT, CHIP 10uF 20% 16V
C721	1-126-394-11	s	ELECT, CHIP 10uF 20% 16V
C722	1-163-038-91	s	CERAMIC, CHIP 0.1uF 25V

(DV-17 BOARD(For NTSC); Suffix -13, 14)

Ref. No. or Q'ty	Part No.	SP	Description
C723	1-163-038-91	s	CERAMIC, CHIP 0.1uF 25V
C724	1-163-038-91	s	CERAMIC, CHIP 0.1uF 25V
C725	1-163-235-11	s	CERAMIC, CHIP 22pF 5% 50V
D151	8-719-027-95	s	DIODE HSM88WK
D152	8-719-041-39	s	DIODE KV1470
D301	8-719-041-39	s	DIODE KV1470
D302	8-719-041-39	s	DIODE KV1470
D401	8-719-801-48	s	DIODE 1SS193
D402	8-719-820-41	s	DIODE 1SS302
D403	8-719-820-41	s	DIODE 1SS302
D501	8-719-801-48	s	DIODE 1SS193
D502	8-719-820-41	s	DIODE 1SS302
D503	8-719-820-41	s	DIODE 1SS302
D801	8-719-801-48	s	DIODE 1SS193
D803	8-719-820-41	s	DIODE 1SS302
D805	8-719-820-41	s	DIODE 1SS302
D808	8-719-801-48	s	DIODE 1SS193
D810	8-719-820-41	s	DIODE 1SS302
D812	8-719-820-41	s	DIODE 1SS302
FB101	1-233-674-21	s	FILTER BLOCK, NOISE, CHIP
FB102	1-233-674-21	s	FILTER BLOCK, NOISE, CHIP
FL201	1-233-314-11	s	FILTER, NOISE, CHIP
FL202	1-233-314-11	s	FILTER, NOISE, CHIP
IC10	8-759-009-07	s	IC MC14053BF
IC11	8-759-009-06	s	IC MC14052BF
IC12	8-759-702-02	s	IC NJM062M
IC13	8-759-157-17	s	IC PQ05SZ1U
IC14	8-759-172-41	s	IC L78M09T-TL
IC15	8-759-068-03	s	IC NJM79L09UA
IC101	8-759-337-30	s	IC UPD482445LGW-B10-E2
IC102	8-759-385-90	s	IC CXD2187AR
IC103	8-759-524-28	s	IC TC74VHC245FT(EL)
IC104	8-759-524-28	s	IC TC74VHC245FT(EL)
IC105	8-759-167-20	s	IC UPD42280GU-30
IC106	8-759-167-20	s	IC UPD42280GU-30
IC107	8-759-186-77	s	IC TC74VHC541F
IC108	8-759-186-77	s	IC TC74VHC541F
IC121	8-759-328-28	s	IC ZA4024
IC122	8-759-426-26	s	IC CXD8608R
IC123	8-759-328-28	s	IC ZA4024
IC124	8-752-378-68	s	IC CXD3101R
IC151	8-759-186-77	s	IC TC74VHC541F
IC152	8-752-375-05	s	IC CXD2191R-T6
IC153	8-759-186-63	s	IC TC74VHC245F(EL)
IC201	8-759-457-61	s	IC CXD8628BR
IC202	8-759-382-18	s	IC CXD2182AR
IC203	8-759-523-95	s	IC TC74VHC74FT(EL)
IC204	8-759-523-95	s	IC TC74VHC74FT(EL)
IC207	8-759-081-48	s	IC TC74VHC08F
IC208	8-759-523-78	s	IC TC74VHC00FT(EL)
IC209	8-759-186-51	s	IC TC74VHC157FS(EL)
IC210	8-759-186-84	s	IC TC74VHC86F(EL)
IC211	8-759-186-51	s	IC TC74VHC157FS(EL)
IC212	8-759-186-63	s	IC TC74VHC245F(EL)
IC214	8-759-186-63	s	IC TC74VHC245F(EL)
IC215	8-759-271-86	s	IC TC7SH04FU
IC252	8-759-337-74	s	IC HM62V256LT8Z

(DV-17 BOARD(For NTSC); Suffix -13, 14)

Ref. No. or Q'ty	Part No.	SP	Description
IC253	8-759-337-74	s	IC HM62V256LT8Z
IC254	8-759-483-02	s	IC CXD8713Q
IC301	8-752-374-96	s	IC CXD2190R-T6
IC302	8-752-374-96	s	IC CXD2190R-T6
IC303	8-759-337-74	s	IC HM62V256LT8Z
IC304	8-759-337-74	s	IC HM62V256LT8Z
IC305	8-759-523-78	s	IC TC74VHC00FT(EL)
IC308	8-759-362-16	s	IC CXD2913AQ
IC309	8-759-362-16	s	IC CXD2913AQ
IC310	8-759-702-02	s	IC NJM062M
IC311	8-759-702-02	s	IC NJM062M
IC313	8-759-523-95	s	IC TC74VHC74FT(EL)
IC314	8-759-271-86	s	IC TC7SH04FU
IC315	8-759-524-09	s	IC TC74VHC153FT(EL)
IC351	8-759-272-21	s	IC TC74VHCT541F
IC352	8-759-523-43	s	IC TC74ACT157FT(EL)
IC353	8-752-352-30	s	IC CXD2705AQ
IC354	8-752-352-30	s	IC CXD2705AQ
IC355	8-759-358-23	s	IC NN514256J-45-T
IC356	8-759-358-23	s	IC NN514256J-45-T
IC357	8-759-326-71	s	IC CXD8517Q
IC358	8-759-326-71	s	IC CXD8517Q
IC359	8-759-523-78	s	IC TC74VHC00FT(EL)
IC360	8-759-523-95	s	IC TC74VHC74FT(EL)
IC361	8-759-523-95	s	IC TC74VHC74FT(EL)
IC363	8-759-524-19	s	IC TC74VHC164FT(EL)
IC364	8-759-524-19	s	IC TC74VHC164FT(EL)
IC365	8-759-523-79	s	IC TC74VHC02FT(EL)
IC381	8-759-173-51	s	IC SM5872AS-ET
IC382	8-759-173-51	s	IC SM5872AS-ET
IC401	8-759-745-64	s	IC NJM4560M
IC402	8-759-745-64	s	IC NJM4560M
IC403	8-759-745-64	s	IC NJM4560M
IC404	8-759-745-64	s	IC NJM4560M
IC405	8-759-521-14	s	IC NJM5532S-D
IC501	8-759-745-64	s	IC NJM4560M
IC503	8-759-745-64	s	IC NJM4560M
IC504	8-759-745-64	s	IC NJM4560M
IC505	8-759-521-14	s	IC NJM5532S-D
IC601	8-759-745-64	s	IC NJM4560M
IC602	8-759-702-02	s	IC NJM062M
IC603	8-759-702-02	s	IC NJM062M
IC604	8-759-702-02	s	IC NJM062M
IC605	8-759-521-14	s	IC NJM5532S-D
IC701	8-759-745-64	s	IC NJM4560M
IC703	8-759-702-02	s	IC NJM062M
IC704	8-759-702-02	s	IC NJM062M
IC705	8-759-521-14	s	IC NJM5532S-D
L11	1-412-364-11	s	INDUCTOR 0UH
L101	1-410-740-31	s	INDUCTOR, CHIP 0.82uH
L103	1-410-740-31	s	INDUCTOR, CHIP 0.82uH
L104	1-410-740-31	s	INDUCTOR, CHIP 0.82uH
L122	1-410-740-31	s	INDUCTOR, CHIP 0.82uH
L151	1-410-381-11	s	INDUCTOR, CHIP 10uH
L153	1-410-381-11	s	INDUCTOR, CHIP 10uH
L154	1-410-740-31	s	INDUCTOR, CHIP 0.82uH
L201	1-410-740-31	s	INDUCTOR, CHIP 0.82uH
L203	1-410-740-31	s	INDUCTOR, CHIP 0.82uH

(DV-17 BOARD(For NTSC); Suffix -13, 14)

Ref. No. or Q'ty	Part No.	SP	Description
L251	1-410-740-31	s	INDUCTOR, CHIP 0.82uH
L252	1-410-740-31	s	INDUCTOR, CHIP 0.82uH
L301	1-410-740-31	s	INDUCTOR, CHIP 0.82uH
L303	1-410-381-11	s	INDUCTOR, CHIP 10uH
L304	1-410-381-11	s	INDUCTOR, CHIP 10uH
L307	1-410-381-11	s	INDUCTOR, CHIP 10uH
L308	1-410-381-11	s	INDUCTOR, CHIP 10uH
L311	1-410-381-11	s	INDUCTOR, CHIP 10uH
L351	1-410-740-31	s	INDUCTOR, CHIP 0.82uH
L352	1-410-381-11	s	INDUCTOR, CHIP 10uH
L354	1-410-381-11	s	INDUCTOR, CHIP 10uH
L355	1-410-381-11	s	INDUCTOR, CHIP 10uH
L356	1-410-740-31	s	INDUCTOR, CHIP 0.82uH
L357	1-410-381-11	s	INDUCTOR, CHIP 10uH
L381	1-410-381-11	s	INDUCTOR, CHIP 10uH
L382	1-410-381-11	s	INDUCTOR, CHIP 10uH
L383	1-410-381-11	s	INDUCTOR, CHIP 10uH
L384	1-410-381-11	s	INDUCTOR, CHIP 10uH
LV301	1-411-984-11	s	COIL, VAR, CHIP
LV302	1-411-984-11	s	COIL, VAR, CHIP
PS10	⚠ 1-576-124-11	s	LINK, IC, CHIP 1A
PS11	⚠ 1-576-124-11	s	LINK, IC, CHIP 1A
PS12	⚠ 1-576-124-11	s	LINK, IC, CHIP 1A
PS13	⚠ 1-576-124-11	s	LINK, IC, CHIP 1A
PS14	⚠ 1-576-124-11	s	LINK, IC, CHIP 1A
PS15	⚠ 1-533-282-21	s	LINK, IC, CHIP 2A
PS16	⚠ 1-576-124-11	s	LINK, IC, CHIP 1A
PS17	⚠ 1-576-124-11	s	LINK, IC, CHIP 1A
Q10	1-801-806-11	s	TRANSISTOR DTC144EKA-T146
Q11	1-801-806-11	s	TRANSISTOR DTC144EKA-T146
Q12	1-801-806-11	s	TRANSISTOR DTC144EKA-T146
Q13	8-729-027-38	s	TRANSISTOR DTA144EKA-T146
Q14	8-729-117-32	s	TRANSISTOR 2SC4177
Q15	1-801-806-11	s	TRANSISTOR DTC144EKA-T146
Q16	8-729-202-38	s	TRANSISTOR 2SC3326N
Q17	8-729-202-38	s	TRANSISTOR 2SC3326N
Q18	8-729-202-38	s	TRANSISTOR 2SC3326N
Q19	8-729-027-38	s	TRANSISTOR DTA144EKA-T146
Q201	8-729-027-38	s	TRANSISTOR DTA144EKA-T146
Q202	8-729-027-38	s	TRANSISTOR DTA144EKA-T146
Q381	1-801-806-11	s	TRANSISTOR DTC144EKA-T146
Q382	1-801-806-11	s	TRANSISTOR DTC144EKA-T146
Q383	1-801-806-11	s	TRANSISTOR DTC144EKA-T146
Q384	1-801-806-11	s	TRANSISTOR DTC144EKA-T146
Q385	1-801-806-11	s	TRANSISTOR DTC144EKA-T146
Q386	8-729-027-38	s	TRANSISTOR DTA144EKA-T146
Q387	8-729-027-38	s	TRANSISTOR DTA144EKA-T146
Q388	8-729-027-38	s	TRANSISTOR DTA144EKA-T146
Q389	8-729-027-38	s	TRANSISTOR DTA144EKA-T146
Q390	8-729-027-38	s	TRANSISTOR DTA144EKA-T146
Q401	8-729-202-38	s	TRANSISTOR 2SC3326N
Q402	8-729-202-38	s	TRANSISTOR 2SC3326N
Q403	8-729-202-38	s	TRANSISTOR 2SC3326N
Q404	8-729-202-38	s	TRANSISTOR 2SC3326N
Q405	8-729-202-38	s	TRANSISTOR 2SC3326N
Q501	8-729-202-38	s	TRANSISTOR 2SC3326N
Q502	8-729-202-38	s	TRANSISTOR 2SC3326N
Q503	8-729-202-38	s	TRANSISTOR 2SC3326N

(DV-17 BOARD(For NTSC); Suffix -13, 14)

Ref. No. or Q'ty	Part No.	SP	Description
Q504	8-729-202-38	s	TRANSISTOR 2SC3326N
Q505	8-729-202-38	s	TRANSISTOR 2SC3326N
Q601	8-729-202-38	s	TRANSISTOR 2SC3326N
Q602	8-729-202-38	s	TRANSISTOR 2SC3326N
Q603	8-729-202-38	s	TRANSISTOR 2SC3326N
Q604	8-729-202-38	s	TRANSISTOR 2SC3326N
Q605	8-729-202-38	s	TRANSISTOR 2SC3326N
Q701	8-729-202-38	s	TRANSISTOR 2SC3326N
Q702	8-729-202-38	s	TRANSISTOR 2SC3326N
Q703	8-729-202-38	s	TRANSISTOR 2SC3326N
Q704	8-729-202-38	s	TRANSISTOR 2SC3326N
Q705	8-729-202-38	s	TRANSISTOR 2SC3326N
R10	1-216-073-00	s	METAL, CHIP 10k 5% 1/10W
R11	1-216-073-00	s	METAL, CHIP 10k 5% 1/10W
R12	1-216-073-00	s	METAL, CHIP 10k 5% 1/10W
R13	1-216-057-00	s	METAL, CHIP 2.2k 5% 1/10W
R14	1-216-057-00	s	METAL, CHIP 2.2k 5% 1/10W
R15	1-216-025-91	s	METAL, CHIP 100 5% 1/10W
R16	1-216-081-00	s	METAL, CHIP 22k 5% 1/10W
R17	1-216-081-00	s	METAL, CHIP 22k 5% 1/10W
R18	1-216-025-91	s	METAL, CHIP 100 5% 1/10W
R20	1-216-057-00	s	METAL, CHIP 2.2k 5% 1/10W
R21	1-216-025-91	s	METAL, CHIP 100 5% 1/10W
R22	1-216-073-00	s	METAL, CHIP 10k 5% 1/10W
R23	1-216-073-00	s	METAL, CHIP 10k 5% 1/10W
R24	1-216-073-00	s	METAL, CHIP 10k 5% 1/10W
R25	1-216-073-00	s	METAL, CHIP 10k 5% 1/10W
R26	1-216-073-00	s	METAL, CHIP 10k 5% 1/10W
R27	1-216-073-00	s	METAL, CHIP 10k 5% 1/10W
R28	1-216-073-00	s	METAL, CHIP 10k 5% 1/10W
R29	1-216-073-00	s	METAL, CHIP 10k 5% 1/10W
R30	1-216-073-00	s	METAL, CHIP 10k 5% 1/10W
R31	1-216-073-00	s	METAL, CHIP 10k 5% 1/10W
R103	1-216-089-91	s	METAL, CHIP 47k 5% 1/10W
R104	1-216-089-91	s	METAL, CHIP 47k 5% 1/10W
R105	1-216-089-91	s	METAL, CHIP 47k 5% 1/10W
R106	1-216-089-91	s	METAL, CHIP 47k 5% 1/10W
R109	1-216-089-91	s	METAL, CHIP 47k 5% 1/10W
R110	1-216-025-91	s	METAL, CHIP 100 5% 1/10W
R133	1-216-025-91	s	METAL, CHIP 100 5% 1/10W
R151	1-216-025-91	s	METAL, CHIP 100 5% 1/10W
R152	1-216-295-91	s	RES, CHIP 0
R154	1-216-025-91	s	METAL, CHIP 100 5% 1/10W
R155	1-216-025-91	s	METAL, CHIP 100 5% 1/10W
R157	1-216-129-00	s	METAL, CHIP 2.2M 5% 1/10W
R158	1-216-041-00	s	METAL, CHIP 470 5% 1/10W
R159	1-216-073-00	s	METAL, CHIP 10k 5% 1/10W
R160	1-216-073-00	s	METAL, CHIP 10k 5% 1/10W
R162	1-216-065-91	s	METAL, CHIP 4.7k 5% 1/10W
R163	1-216-025-91	s	METAL, CHIP 100 5% 1/10W
R167	1-216-025-91	s	METAL, CHIP 100 5% 1/10W
R168	1-216-025-91	s	METAL, CHIP 100 5% 1/10W
R170	1-216-025-91	s	METAL, CHIP 100 5% 1/10W
R173	1-216-295-91	s	RES, CHIP 0
R205	1-216-025-91	s	METAL, CHIP 100 5% 1/10W
R211	1-216-073-00	s	METAL, CHIP 10k 5% 1/10W
R212	1-216-073-00	s	METAL, CHIP 10k 5% 1/10W
R213	1-216-025-91	s	METAL, CHIP 100 5% 1/10W

(DV-17 BOARD(For NTSC); Suffix -13, 14)

Ref. No. or Q'ty	Part No.	SP	Description
R214	1-216-025-91	s	METAL, CHIP 100 5% 1/10W
R251	1-216-025-91	s	METAL, CHIP 100 5% 1/10W
R254	1-216-025-91	s	METAL, CHIP 100 5% 1/10W
R256	1-216-295-91	s	RES, CHIP 0
R274	1-216-295-91	s	RES, CHIP 0
R275	1-216-295-91	s	RES, CHIP 0
R276	1-216-295-91	s	RES, CHIP 0
R277	1-216-295-91	s	RES, CHIP 0
R278	1-216-295-91	s	RES, CHIP 0
R301	1-216-295-91	s	RES, CHIP 0
R303	1-216-295-91	s	RES, CHIP 0
R310	1-216-097-91	s	METAL, CHIP 100k 5% 1/10W
R311	1-216-089-91	s	METAL, CHIP 47k 5% 1/10W
R312	1-216-097-91	s	METAL, CHIP 100k 5% 1/10W
R313	1-216-091-00	s	METAL, CHIP 56k 5% 1/10W
R314	1-216-089-91	s	METAL, CHIP 47k 5% 1/10W
R315	1-216-049-91	s	METAL, CHIP 1k 5% 1/10W
R316	1-216-089-91	s	METAL, CHIP 47k 5% 1/10W
R317	1-216-073-00	s	METAL, CHIP 10k 5% 1/10W
R318	1-216-089-91	s	METAL, CHIP 47k 5% 1/10W
R319	1-216-081-00	s	METAL, CHIP 22k 5% 1/10W
R320	1-216-089-91	s	METAL, CHIP 47k 5% 1/10W
R321	1-216-089-91	s	METAL, CHIP 47k 5% 1/10W
R322	1-216-089-91	s	METAL, CHIP 47k 5% 1/10W
R323	1-216-089-91	s	METAL, CHIP 47k 5% 1/10W
R324	1-216-089-91	s	METAL, CHIP 47k 5% 1/10W
R325	1-216-089-91	s	METAL, CHIP 47k 5% 1/10W
R326	1-216-089-91	s	METAL, CHIP 47k 5% 1/10W
R327	1-216-089-91	s	METAL, CHIP 47k 5% 1/10W
R328	1-216-073-00	s	METAL, CHIP 10k 5% 1/10W
R329	1-216-295-91	s	RES, CHIP 0
R330	1-216-025-91	s	METAL, CHIP 100 5% 1/10W
R331	1-216-089-91	s	METAL, CHIP 47k 5% 1/10W
R355	1-216-049-91	s	METAL, CHIP 1k 5% 1/10W
R381	1-216-049-91	s	METAL, CHIP 1k 5% 1/10W
R382	1-216-081-00	s	METAL, CHIP 22k 5% 1/10W
R383	1-216-081-00	s	METAL, CHIP 22k 5% 1/10W
R384	1-216-081-00	s	METAL, CHIP 22k 5% 1/10W
R385	1-216-081-00	s	METAL, CHIP 22k 5% 1/10W
R386	1-216-073-00	s	METAL, CHIP 10k 5% 1/10W
R401	1-208-806-11	s	METAL, CHIP 10k 0.5% 1/10W
R402	1-208-806-11	s	METAL, CHIP 10k 0.5% 1/10W
R403	1-208-806-11	s	METAL, CHIP 10k 0.5% 1/10W
R404	1-208-806-11	s	METAL, CHIP 10k 0.5% 1/10W
R405	1-208-814-11	s	METAL, CHIP 22k 0.5% 1/10W
R406	1-208-814-11	s	METAL, CHIP 22k 0.5% 1/10W
R407	1-208-808-11	s	METAL, CHIP 12k 0.5% 1/10W
R408	1-208-808-11	s	METAL, CHIP 12k 0.5% 1/10W
R409	1-208-814-11	s	METAL, CHIP 22k 0.5% 1/10W
R410	1-216-073-00	s	METAL, CHIP 10k 5% 1/10W
R411	1-208-814-11	s	METAL, CHIP 22k 0.5% 1/10W
R412	1-208-798-11	s	METAL, CHIP 4.7k 0.5% 1/10W
R413	1-208-805-11	s	METAL, CHIP 9.1k 0.5% 1/10W
R414	1-208-798-11	s	METAL, CHIP 4.7k 0.5% 1/10W
R415	1-216-073-00	s	METAL, CHIP 10k 5% 1/10W
R416	1-208-806-11	s	METAL, CHIP 10k 0.5% 1/10W
R417	1-216-073-00	s	METAL, CHIP 10k 5% 1/10W
R418	1-208-804-11	s	METAL, CHIP 8.2k 0.5% 1/10W
R419	1-208-805-11	s	METAL, CHIP 9.1k 0.5% 1/10W

(DV-17 BOARD(For NTSC); Suffix -13, 14)

Ref. No. or Q'ty	Part No.	SP	Description
R420	1-208-798-11	s	METAL, CHIP 4.7k 0.5% 1/10W
R421	1-216-073-00	s	METAL, CHIP 10k 5% 1/10W
R422	1-208-808-11	s	METAL, CHIP 12k 0.5% 1/10W
R423	1-208-798-11	s	METAL, CHIP 4.7k 0.5% 1/10W
R424	1-208-806-11	s	METAL, CHIP 10k 0.5% 1/10W
R425	1-208-806-11	s	METAL, CHIP 10k 0.5% 1/10W
R426	1-208-798-11	s	METAL, CHIP 4.7k 0.5% 1/10W
R427	1-208-798-11	s	METAL, CHIP 4.7k 0.5% 1/10W
R428	1-208-798-11	s	METAL, CHIP 4.7k 0.5% 1/10W
R429	1-208-798-11	s	METAL, CHIP 4.7k 0.5% 1/10W
R430	1-208-806-11	s	METAL, CHIP 10k 0.5% 1/10W
R431	1-208-806-11	s	METAL, CHIP 10k 0.5% 1/10W
R432	1-216-049-91	s	METAL, CHIP 1k 5% 1/10W
R433	1-208-806-11	s	METAL, CHIP 10k 0.5% 1/10W
R435	1-216-049-91	s	METAL, CHIP 1k 5% 1/10W
R437	1-208-750-11	s	METAL, CHIP 47 0.5% 1/10W
R438	1-216-097-91	s	METAL, CHIP 100k 5% 1/10W
R439	1-216-097-91	s	METAL, CHIP 100k 5% 1/10W
R440	1-208-806-11	s	METAL, CHIP 10k 0.5% 1/10W
R441	1-208-750-11	s	METAL, CHIP 47 0.5% 1/10W
R442	1-220-242-11	s	METAL, CHIP 22 5% 1/4W
R445	1-220-242-11	s	METAL, CHIP 22 5% 1/4W
R448	1-216-037-00	s	METAL, CHIP 330 5% 1/10W
R449	1-216-073-00	s	METAL, CHIP 10k 5% 1/10W
R501	1-208-806-11	s	METAL, CHIP 10k 0.5% 1/10W
R502	1-208-806-11	s	METAL, CHIP 10k 0.5% 1/10W
R503	1-208-806-11	s	METAL, CHIP 10k 0.5% 1/10W
R504	1-208-806-11	s	METAL, CHIP 10k 0.5% 1/10W
R505	1-208-814-11	s	METAL, CHIP 22k 0.5% 1/10W
R506	1-208-814-11	s	METAL, CHIP 22k 0.5% 1/10W
R507	1-208-808-11	s	METAL, CHIP 12k 0.5% 1/10W
R508	1-208-808-11	s	METAL, CHIP 12k 0.5% 1/10W
R509	1-208-814-11	s	METAL, CHIP 22k 0.5% 1/10W
R510	1-216-073-00	s	METAL, CHIP 10k 5% 1/10W
R511	1-208-814-11	s	METAL, CHIP 22k 0.5% 1/10W
R512	1-208-798-11	s	METAL, CHIP 4.7k 0.5% 1/10W
R513	1-208-805-11	s	METAL, CHIP 9.1k 0.5% 1/10W
R514	1-208-798-11	s	METAL, CHIP 4.7k 0.5% 1/10W
R515	1-216-073-00	s	METAL, CHIP 10k 5% 1/10W
R516	1-208-806-11	s	METAL, CHIP 10k 0.5% 1/10W
R517	1-216-073-00	s	METAL, CHIP 10k 5% 1/10W
R518	1-208-804-11	s	METAL, CHIP 8.2k 0.5% 1/10W
R519	1-208-805-11	s	METAL, CHIP 9.1k 0.5% 1/10W
R520	1-208-798-11	s	METAL, CHIP 4.7k 0.5% 1/10W
R521	1-216-073-00	s	METAL, CHIP 10k 5% 1/10W
R522	1-208-808-11	s	METAL, CHIP 12k 0.5% 1/10W
R523	1-208-798-11	s	METAL, CHIP 4.7k 0.5% 1/10W
R524	1-208-806-11	s	METAL, CHIP 10k 0.5% 1/10W
R525	1-208-806-11	s	METAL, CHIP 10k 0.5% 1/10W
R526	1-208-798-11	s	METAL, CHIP 4.7k 0.5% 1/10W
R527	1-208-798-11	s	METAL, CHIP 4.7k 0.5% 1/10W
R528	1-208-798-11	s	METAL, CHIP 4.7k 0.5% 1/10W
R529	1-208-798-11	s	METAL, CHIP 4.7k 0.5% 1/10W
R530	1-208-806-11	s	METAL, CHIP 10k 0.5% 1/10W
R531	1-208-806-11	s	METAL, CHIP 10k 0.5% 1/10W
R532	1-216-049-91	s	METAL, CHIP 1k 5% 1/10W
R533	1-208-806-11	s	METAL, CHIP 10k 0.5% 1/10W
R535	1-216-049-91	s	METAL, CHIP 1k 5% 1/10W
R537	1-208-750-11	s	METAL, CHIP 47 0.5% 1/10W

(DV-17 BOARD(For NTSC); Suffix -13, 14)

Ref. No. or Q'ty	Part No.	SP	Description
R538	1-216-097-91	s	METAL, CHIP 100k 5% 1/10W
R539	1-216-097-91	s	METAL, CHIP 100k 5% 1/10W
R540	1-208-806-11	s	METAL, CHIP 10k 0.5% 1/10W
R541	1-208-750-11	s	METAL, CHIP 47 0.5% 1/10W
R544	1-220-242-11	s	METAL, CHIP 22 5% 1/4W
R547	1-220-242-11	s	METAL, CHIP 22 5% 1/4W
R548	1-216-037-00	s	METAL, CHIP 330 5% 1/10W
R549	1-216-073-00	s	METAL, CHIP 10k 5% 1/10W
R601	1-208-806-11	s	METAL, CHIP 10k 0.5% 1/10W
R602	1-208-806-11	s	METAL, CHIP 10k 0.5% 1/10W
R603	1-208-806-11	s	METAL, CHIP 10k 0.5% 1/10W
R604	1-208-806-11	s	METAL, CHIP 10k 0.5% 1/10W
R605	1-208-814-11	s	METAL, CHIP 22k 0.5% 1/10W
R606	1-208-814-11	s	METAL, CHIP 22k 0.5% 1/10W
R607	1-208-808-11	s	METAL, CHIP 12k 0.5% 1/10W
R608	1-208-808-11	s	METAL, CHIP 12k 0.5% 1/10W
R609	1-208-814-11	s	METAL, CHIP 22k 0.5% 1/10W
R610	1-216-073-00	s	METAL, CHIP 10k 5% 1/10W
R611	1-208-814-11	s	METAL, CHIP 22k 0.5% 1/10W
R612	1-208-798-11	s	METAL, CHIP 4.7k 0.5% 1/10W
R613	1-208-805-11	s	METAL, CHIP 9.1k 0.5% 1/10W
R614	1-208-798-11	s	METAL, CHIP 4.7k 0.5% 1/10W
R615	1-216-073-00	s	METAL, CHIP 10k 5% 1/10W
R616	1-208-806-11	s	METAL, CHIP 10k 0.5% 1/10W
R617	1-216-073-00	s	METAL, CHIP 10k 5% 1/10W
R618	1-208-804-11	s	METAL, CHIP 8.2k 0.5% 1/10W
R619	1-208-805-11	s	METAL, CHIP 9.1k 0.5% 1/10W
R620	1-208-798-11	s	METAL, CHIP 4.7k 0.5% 1/10W
R621	1-216-073-00	s	METAL, CHIP 10k 5% 1/10W
R622	1-208-808-11	s	METAL, CHIP 12k 0.5% 1/10W
R623	1-208-798-11	s	METAL, CHIP 4.7k 0.5% 1/10W
R624	1-208-806-11	s	METAL, CHIP 10k 0.5% 1/10W
R625	1-208-806-11	s	METAL, CHIP 10k 0.5% 1/10W
R626	1-208-798-11	s	METAL, CHIP 4.7k 0.5% 1/10W
R627	1-208-798-11	s	METAL, CHIP 4.7k 0.5% 1/10W
R628	1-208-798-11	s	METAL, CHIP 4.7k 0.5% 1/10W
R629	1-208-798-11	s	METAL, CHIP 4.7k 0.5% 1/10W
R630	1-208-806-11	s	METAL, CHIP 10k 0.5% 1/10W
R631	1-208-806-11	s	METAL, CHIP 10k 0.5% 1/10W
R632	1-216-049-91	s	METAL, CHIP 1k 5% 1/10W
R633	1-208-806-11	s	METAL, CHIP 10k 0.5% 1/10W
R635	1-216-049-91	s	METAL, CHIP 1k 5% 1/10W
R637	1-208-750-11	s	METAL, CHIP 47 0.5% 1/10W
R638	1-216-097-91	s	METAL, CHIP 100k 5% 1/10W
R639	1-216-097-91	s	METAL, CHIP 100k 5% 1/10W
R640	1-208-806-11	s	METAL, CHIP 10k 0.5% 1/10W
R641	1-208-750-11	s	METAL, CHIP 47 0.5% 1/10W
R644	1-220-242-11	s	METAL, CHIP 22 5% 1/4W
R645	1-220-242-11	s	METAL, CHIP 22 5% 1/4W
R648	1-216-037-00	s	METAL, CHIP 330 5% 1/10W
R649	1-216-073-00	s	METAL, CHIP 10k 5% 1/10W
R701	1-208-806-11	s	METAL, CHIP 10k 0.5% 1/10W
R702	1-208-806-11	s	METAL, CHIP 10k 0.5% 1/10W
R703	1-208-806-11	s	METAL, CHIP 10k 0.5% 1/10W
R704	1-208-806-11	s	METAL, CHIP 10k 0.5% 1/10W
R705	1-208-814-11	s	METAL, CHIP 22k 0.5% 1/10W
R706	1-208-814-11	s	METAL, CHIP 22k 0.5% 1/10W
R707	1-208-808-11	s	METAL, CHIP 12k 0.5% 1/10W
R708	1-208-808-11	s	METAL, CHIP 12k 0.5% 1/10W

(DV-17 BOARD(For NTSC); Suffix -13, 14)

Ref. No. or Q'ty	Part No.	SP	Description
R709	1-208-814-11	s	METAL, CHIP 22k 0.5% 1/10W
R710	1-216-073-00	s	METAL, CHIP 10k 5% 1/10W
R711	1-208-814-11	s	METAL, CHIP 22k 0.5% 1/10W
R712	1-208-798-11	s	METAL, CHIP 4.7k 0.5% 1/10W
R713	1-208-805-11	s	METAL, CHIP 9.1k 0.5% 1/10W
R714	1-208-798-11	s	METAL, CHIP 4.7k 0.5% 1/10W
R715	1-216-073-00	s	METAL, CHIP 10k 5% 1/10W
R716	1-208-806-11	s	METAL, CHIP 10k 0.5% 1/10W
R717	1-216-073-00	s	METAL, CHIP 10k 5% 1/10W
R718	1-208-804-11	s	METAL, CHIP 8.2k 0.5% 1/10W
R719	1-208-805-11	s	METAL, CHIP 9.1k 0.5% 1/10W
R720	1-208-798-11	s	METAL, CHIP 4.7k 0.5% 1/10W
R721	1-216-073-00	s	METAL, CHIP 10k 5% 1/10W
R722	1-208-808-11	s	METAL, CHIP 12k 0.5% 1/10W
R723	1-208-798-11	s	METAL, CHIP 4.7k 0.5% 1/10W
R724	1-208-806-11	s	METAL, CHIP 10k 0.5% 1/10W
R725	1-208-806-11	s	METAL, CHIP 10k 0.5% 1/10W
R726	1-208-798-11	s	METAL, CHIP 4.7k 0.5% 1/10W
R727	1-208-798-11	s	METAL, CHIP 4.7k 0.5% 1/10W
R728	1-208-798-11	s	METAL, CHIP 4.7k 0.5% 1/10W
R729	1-208-798-11	s	METAL, CHIP 4.7k 0.5% 1/10W
R730	1-208-806-11	s	METAL, CHIP 10k 0.5% 1/10W
R731	1-208-806-11	s	METAL, CHIP 10k 0.5% 1/10W
R732	1-216-049-91	s	METAL, CHIP 1k 5% 1/10W
R733	1-208-806-11	s	METAL, CHIP 10k 0.5% 1/10W
R735	1-216-049-91	s	METAL, CHIP 1k 5% 1/10W
R737	1-208-750-11	s	METAL, CHIP 47 0.5% 1/10W
R738	1-216-097-91	s	METAL, CHIP 100k 5% 1/10W
R739	1-216-097-91	s	METAL, CHIP 100k 5% 1/10W
R740	1-208-806-11	s	METAL, CHIP 10k 0.5% 1/10W
R741	1-208-750-11	s	METAL, CHIP 47 0.5% 1/10W
R742	1-220-242-11	s	METAL, CHIP 22 5% 1/4W
R747	1-220-242-11	s	METAL, CHIP 22 5% 1/4W
R748	1-216-037-00	s	METAL, CHIP 330 5% 1/10W
R749	1-216-073-00	s	METAL, CHIP 10k 5% 1/10W
RB101	1-239-998-11	s	RESISTOR BLOCK, CHIP 100 x 4
RB102	1-239-998-11	s	RESISTOR BLOCK, CHIP 100 x 4
RB103	1-239-998-11	s	RESISTOR BLOCK, CHIP 100 x 4
RB104	1-239-998-11	s	RESISTOR BLOCK, CHIP 100 x 4
RB105	1-239-308-11	s	RESISTOR BLOCK, CHIP 47K x 8
RB107	1-239-998-11	s	RESISTOR BLOCK, CHIP 100 x 4
RB108	1-239-998-11	s	RESISTOR BLOCK, CHIP 100 x 4
RB109	1-239-998-11	s	RESISTOR BLOCK, CHIP 100 x 4
RB121	1-239-998-11	s	RESISTOR BLOCK, CHIP 100 x 4
RB122	1-239-998-11	s	RESISTOR BLOCK, CHIP 100 x 4
RB151	1-239-998-11	s	RESISTOR BLOCK, CHIP 100 x 4
RB153	1-239-998-11	s	RESISTOR BLOCK, CHIP 100 x 4
RB154	1-239-998-11	s	RESISTOR BLOCK, CHIP 100 x 4
RB201	1-239-998-11	s	RESISTOR BLOCK, CHIP 100 x 4
RB202	1-239-998-11	s	RESISTOR BLOCK, CHIP 100 x 4
RB203	1-239-998-11	s	RESISTOR BLOCK, CHIP 100 x 4
RB204	1-239-998-11	s	RESISTOR BLOCK, CHIP 100 x 4
RB205	1-239-998-11	s	RESISTOR BLOCK, CHIP 100 x 4
RB252	1-239-308-11	s	RESISTOR BLOCK, CHIP 47k x 8
RB301	1-239-308-11	s	RESISTOR BLOCK, CHIP 47k x 8
RB302	1-239-998-11	s	RESISTOR BLOCK, CHIP 100 x 4
RB303	1-239-998-11	s	RESISTOR BLOCK, CHIP 100 x 4
RB304	1-239-998-11	s	RESISTOR BLOCK, CHIP 100 x 4
RB305	1-239-998-11	s	RESISTOR BLOCK, CHIP 100 x 4

(DV-17 BOARD(For NTSC); Suffix -13, 14)

Ref. No. or Q'ty	Part No.	SP	Description
RB351	1-239-998-11	s	RESISTOR BLOCK, CHIP 100 x 4
RV401	1-241-264-11	s	RES, ADJ, METAL 10k
RV501	1-241-264-11	s	RES, ADJ, METAL 10k
RV601	1-241-264-11	s	RES, ADJ, METAL 10k
RV701	1-241-264-11	s	RES, ADJ, METAL 10k
RY401	1-515-716-11	s	RELAY (TQ2-5V)
RY501	1-515-716-11	s	RELAY (TQ2-5V)
RY601	1-515-716-11	s	RELAY (TQ2-5V)
RY701	1-515-716-11	s	RELAY (TQ2-5V)

DV-17 BOARD(For NTSC); Suffix -12

This list corresponds to the board suffix number -12.

Ref. No. or Q'ty	Part No.	SP	Description
1pc	A-8312-949-B	s	MOUNTED CIRCUIT BOARD, DV-17
1pc	7-621-759-45	s	+PSW, 2.6x6
1pc	3-179-084-01	s	LEVER (R), PRINTED CIRCUIT BOARD
1pc	3-179-085-01	s	LEVER (L), PRINTED CIRCUIT BOARD
C10	1-163-038-91	s	CERAMIC, CHIP 0.1uF 25V
C11	1-163-038-91	s	CERAMIC, CHIP 0.1uF 25V
C12	1-163-038-91	s	CERAMIC, CHIP 0.1uF 25V
C13	1-163-038-91	s	CERAMIC, CHIP 0.1uF 25V
C14	1-163-038-91	s	CERAMIC, CHIP 0.1uF 25V
C15	1-163-038-91	s	CERAMIC, CHIP 0.1uF 25V
C16	1-163-251-11	s	CERAMIC, CHIP 100pF 5% 50V
C17	1-163-251-11	s	CERAMIC, CHIP 100pF 5% 50V
C18	1-126-394-11	s	ELECT, CHIP 10uF 20% 16V
C19	1-126-394-11	s	ELECT, CHIP 10uF 20% 16V
C20	1-126-394-11	s	ELECT, CHIP 10uF 20% 16V
C21	1-126-394-11	s	ELECT, CHIP 10uF 20% 16V
C22	1-163-038-91	s	CERAMIC, CHIP 0.1uF 25V
C23	1-163-038-91	s	CERAMIC, CHIP 0.1uF 25V
C24	1-163-038-91	s	CERAMIC, CHIP 0.1uF 25V
C27	1-163-038-91	s	CERAMIC, CHIP 0.1uF 25V
C28	1-163-038-91	s	CERAMIC, CHIP 0.1uF 25V
C29	1-163-038-91	s	CERAMIC, CHIP 0.1uF 25V
C30	1-126-396-11	s	ELECT, CHIP 47uF 20% 16V
C31	1-126-394-11	s	ELECT, CHIP 10uF 20% 16V
C32	1-126-394-11	s	ELECT, CHIP 10uF 20% 16V
C33	1-126-396-11	s	ELECT, CHIP 47uF 20% 16V
C101	1-163-038-91	s	CERAMIC, CHIP 0.1uF 25V
C102	1-163-038-91	s	CERAMIC, CHIP 0.1uF 25V
C103	1-163-038-91	s	CERAMIC, CHIP 0.1uF 25V
C104	1-163-038-91	s	CERAMIC, CHIP 0.1uF 25V
C105	1-163-038-91	s	CERAMIC, CHIP 0.1uF 25V
C106	1-163-038-91	s	CERAMIC, CHIP 0.1uF 25V
C107	1-163-227-11	s	CERAMIC, CHIP 10pF 5% 50V
C108	1-163-038-91	s	CERAMIC, CHIP 0.1uF 25V
C109	1-163-038-91	s	CERAMIC, CHIP 0.1uF 25V
C110	1-126-394-11	s	ELECT, CHIP 10uF 20% 16V
C111	1-163-038-91	s	CERAMIC, CHIP 0.1uF 25V
C112	1-163-038-91	s	CERAMIC, CHIP 0.1uF 25V
C113	1-163-038-91	s	CERAMIC, CHIP 0.1uF 25V
C114	1-163-038-91	s	CERAMIC, CHIP 0.1uF 25V
C115	1-126-394-11	s	ELECT, CHIP 10uF 20% 16V
C116	1-126-394-11	s	ELECT, CHIP 10uF 20% 16V
C117	1-163-038-91	s	CERAMIC, CHIP 0.1uF 25V
C118	1-163-038-91	s	CERAMIC, CHIP 0.1uF 25V
C119	1-163-038-91	s	CERAMIC, CHIP 0.1uF 25V
C121	1-163-038-91	s	CERAMIC, CHIP 0.1uF 25V
C123	1-163-038-91	s	CERAMIC, CHIP 0.1uF 25V
C124	1-163-038-91	s	CERAMIC, CHIP 0.1uF 25V
C125	1-163-038-91	s	CERAMIC, CHIP 0.1uF 25V
C126	1-163-038-91	s	CERAMIC, CHIP 0.1uF 25V
C127	1-163-038-91	s	CERAMIC, CHIP 0.1uF 25V
C128	1-163-038-91	s	CERAMIC, CHIP 0.1uF 25V
C129	1-126-396-11	s	ELECT, CHIP 47uF 20% 16V
C130	1-163-038-91	s	CERAMIC, CHIP 0.1uF 25V
C132	1-163-038-91	s	CERAMIC, CHIP 0.1uF 25V
C133	1-163-038-91	s	CERAMIC, CHIP 0.1uF 25V

(DV-17 BOARD(For NTSC); Suffix -12)

Ref. No. or Q'ty	Part No.	SP	Description
C134	1-163-038-91	s	CERAMIC, CHIP 0.1uF 25V
C135	1-163-038-91	s	CERAMIC, CHIP 0.1uF 25V
C151	1-163-275-11	s	CERAMIC, CHIP 0.001uF 5% 50V
C153	1-163-038-91	s	CERAMIC, CHIP 0.1uF 25V
C154	1-126-396-11	s	ELECT, CHIP 47uF 20% 16V
C155	1-163-038-91	s	CERAMIC, CHIP 0.1uF 25V
C156	1-163-038-91	s	CERAMIC, CHIP 0.1uF 25V
C157	1-163-038-91	s	CERAMIC, CHIP 0.1uF 25V
C158	1-163-038-91	s	CERAMIC, CHIP 0.1uF 25V
C159	1-163-038-91	s	CERAMIC, CHIP 0.1uF 25V
C160	1-163-038-91	s	CERAMIC, CHIP 0.1uF 25V
C161	1-163-038-91	s	CERAMIC, CHIP 0.1uF 25V
C162	1-163-275-11	s	CERAMIC, CHIP 0.001uF 5% 50V
C163	1-163-275-11	s	CERAMIC, CHIP 0.001uF 5% 50V
C164	1-163-275-11	s	CERAMIC, CHIP 0.001uF 5% 50V
C165	1-104-760-11	s	CERAMIC, CHIP 0.047uF 10% 50V
C166	1-135-179-21	s	TANTALUM, CHIP 2.2uF 10% 16V
C167	1-163-038-91	s	CERAMIC, CHIP 0.1uF 25V
C168	1-163-038-91	s	CERAMIC, CHIP 0.1uF 25V
C169	1-163-038-91	s	CERAMIC, CHIP 0.1uF 25V
C170	1-163-038-91	s	CERAMIC, CHIP 0.1uF 25V
C171	1-163-231-11	s	CERAMIC, CHIP 15pF 5% 50V
C201	1-163-038-91	s	CERAMIC, CHIP 0.1uF 25V
C202	1-126-396-11	s	ELECT, CHIP 47uF 20% 16V
C203	1-163-038-91	s	CERAMIC, CHIP 0.1uF 25V
C204	1-163-038-91	s	CERAMIC, CHIP 0.1uF 25V
C205	1-163-038-91	s	CERAMIC, CHIP 0.1uF 25V
C206	1-163-038-91	s	CERAMIC, CHIP 0.1uF 25V
C207	1-163-038-91	s	CERAMIC, CHIP 0.1uF 25V
C209	1-163-038-91	s	CERAMIC, CHIP 0.1uF 25V
C210	1-163-038-91	s	CERAMIC, CHIP 0.1uF 25V
C211	1-163-038-91	s	CERAMIC, CHIP 0.1uF 25V
C212	1-163-038-91	s	CERAMIC, CHIP 0.1uF 25V
C213	1-163-038-91	s	CERAMIC, CHIP 0.1uF 25V
C214	1-163-038-91	s	CERAMIC, CHIP 0.1uF 25V
C218	1-163-038-91	s	CERAMIC, CHIP 0.1uF 25V
C219	1-163-038-91	s	CERAMIC, CHIP 0.1uF 25V
C220	1-163-038-91	s	CERAMIC, CHIP 0.1uF 25V
C221	1-163-038-91	s	CERAMIC, CHIP 0.1uF 25V
C222	1-163-038-91	s	CERAMIC, CHIP 0.1uF 25V
C223	1-163-038-91	s	CERAMIC, CHIP 0.1uF 25V
C224	1-163-038-91	s	CERAMIC, CHIP 0.1uF 25V
C225	1-163-038-91	s	CERAMIC, CHIP 0.1uF 25V
C226	1-126-396-11	s	ELECT, CHIP 47uF 20% 16V
C228	1-163-038-91	s	CERAMIC, CHIP 0.1uF 25V
C229	1-163-038-91	s	CERAMIC, CHIP 0.1uF 25V
C251	1-126-394-11	s	ELECT, CHIP 10uF 20% 16V
C252	1-163-038-91	s	CERAMIC, CHIP 0.1uF 25V
C253	1-126-394-11	s	ELECT, CHIP 10uF 20% 16V
C254	1-163-038-91	s	CERAMIC, CHIP 0.1uF 25V
C255	1-163-038-91	s	CERAMIC, CHIP 0.1uF 25V
C256	1-163-038-91	s	CERAMIC, CHIP 0.1uF 25V
C257	1-163-038-91	s	CERAMIC, CHIP 0.1uF 25V
C258	1-163-038-91	s	CERAMIC, CHIP 0.1uF 25V
C259	1-163-038-91	s	CERAMIC, CHIP 0.1uF 25V
C260	1-163-038-91	s	CERAMIC, CHIP 0.1uF 25V
C261	1-163-038-91	s	CERAMIC, CHIP 0.1uF 25V
C262	1-163-038-91	s	CERAMIC, CHIP 0.1uF 25V
C263	1-163-038-91	s	CERAMIC, CHIP 0.1uF 25V

(DV-17 BOARD(For NTSC); Suffix -12)

Ref. No. or Q'ty	Part No.	SP	Description
C264	1-163-038-91	s	CERAMIC, CHIP 0.1uF 25V
C265	1-163-038-91	s	CERAMIC, CHIP 0.1uF 25V
C266	1-163-038-91	s	CERAMIC, CHIP 0.1uF 25V
C267	1-163-038-91	s	CERAMIC, CHIP 0.1uF 25V
C268	1-163-038-91	s	CERAMIC, CHIP 0.1uF 25V
C269	1-163-038-91	s	CERAMIC, CHIP 0.1uF 25V
C270	1-163-038-91	s	CERAMIC, CHIP 0.1uF 25V
C272	1-163-038-91	s	CERAMIC, CHIP 0.1uF 25V
C301	1-163-038-91	s	CERAMIC, CHIP 0.1uF 25V
C302	1-163-038-91	s	CERAMIC, CHIP 0.1uF 25V
C303	1-163-038-91	s	CERAMIC, CHIP 0.1uF 25V
C304	1-163-038-91	s	CERAMIC, CHIP 0.1uF 25V
C305	1-163-038-91	s	CERAMIC, CHIP 0.1uF 25V
C306	1-163-038-91	s	CERAMIC, CHIP 0.1uF 25V
C307	1-163-038-91	s	CERAMIC, CHIP 0.1uF 25V
C308	1-163-038-91	s	CERAMIC, CHIP 0.1uF 25V
C309	1-163-038-91	s	CERAMIC, CHIP 0.1uF 25V
C310	1-163-038-91	s	CERAMIC, CHIP 0.1uF 25V
C311	1-163-038-91	s	CERAMIC, CHIP 0.1uF 25V
C312	1-163-038-91	s	CERAMIC, CHIP 0.1uF 25V
C313	1-126-396-11	s	ELECT, CHIP 47uF 20% 16V
C315	1-163-038-91	s	CERAMIC, CHIP 0.1uF 25V
C316	1-163-038-91	s	CERAMIC, CHIP 0.1uF 25V
C317	1-163-038-91	s	CERAMIC, CHIP 0.1uF 25V
C318	1-163-038-91	s	CERAMIC, CHIP 0.1uF 25V
C319	1-163-038-91	s	CERAMIC, CHIP 0.1uF 25V
C320	1-164-346-11	s	CERAMIC, CHIP 1uF 16V
C321	1-164-346-11	s	CERAMIC, CHIP 1uF 16V
C322	1-163-038-91	s	CERAMIC, CHIP 0.1uF 25V
C323	1-163-038-91	s	CERAMIC, CHIP 0.1uF 25V
C324	1-163-038-91	s	CERAMIC, CHIP 0.1uF 25V
C325	1-163-038-91	s	CERAMIC, CHIP 0.1uF 25V
C326	1-163-038-91	s	CERAMIC, CHIP 0.1uF 25V
C327	1-163-038-91	s	CERAMIC, CHIP 0.1uF 25V
C328	1-163-038-91	s	CERAMIC, CHIP 0.1uF 25V
C329	1-163-038-91	s	CERAMIC, CHIP 0.1uF 25V
C330	1-163-038-91	s	CERAMIC, CHIP 0.1uF 25V
C331	1-163-251-11	s	CERAMIC, CHIP 100pF 5% 50V
C332	1-163-038-91	s	CERAMIC, CHIP 0.1uF 25V
C333	1-163-251-11	s	CERAMIC, CHIP 100pF 5% 50V
C334	1-163-038-91	s	CERAMIC, CHIP 0.1uF 25V
C335	1-163-038-91	s	CERAMIC, CHIP 0.1uF 25V
C336	1-163-275-11	s	CERAMIC, CHIP 0.001uF 5% 50V
C337	1-163-275-11	s	CERAMIC, CHIP 0.001uF 5% 50V
C338	1-163-275-11	s	CERAMIC, CHIP 0.001uF 5% 50V
C339	1-163-275-11	s	CERAMIC, CHIP 0.001uF 5% 50V
C340	1-163-038-91	s	CERAMIC, CHIP 0.1uF 25V
C341	1-163-038-91	s	CERAMIC, CHIP 0.1uF 25V
C342	1-163-038-91	s	CERAMIC, CHIP 0.1uF 25V
C343	1-163-038-91	s	CERAMIC, CHIP 0.1uF 25V
C344	1-163-038-91	s	CERAMIC, CHIP 0.1uF 25V
C345	1-163-038-91	s	CERAMIC, CHIP 0.1uF 25V
C346	1-163-038-91	s	CERAMIC, CHIP 0.1uF 25V
C347	1-163-038-91	s	CERAMIC, CHIP 0.1uF 25V
C348	1-163-038-91	s	CERAMIC, CHIP 0.1uF 25V
C351	1-163-038-91	s	CERAMIC, CHIP 0.1uF 25V
C353	1-163-038-91	s	CERAMIC, CHIP 0.1uF 25V
C354	1-163-038-91	s	CERAMIC, CHIP 0.1uF 25V
C355	1-163-038-91	s	CERAMIC, CHIP 0.1uF 25V

(DV-17 BOARD(For NTSC); Suffix -12)

Ref. No. or Q'ty	Part No.	SP	Description
C356	1-163-038-91	s	CERAMIC, CHIP 0.1uF 25V
C357	1-163-038-91	s	CERAMIC, CHIP 0.1uF 25V
C358	1-163-038-91	s	CERAMIC, CHIP 0.1uF 25V
C359	1-163-038-91	s	CERAMIC, CHIP 0.1uF 25V
C360	1-163-038-91	s	CERAMIC, CHIP 0.1uF 25V
C361	1-163-038-91	s	CERAMIC, CHIP 0.1uF 25V
C362	1-163-038-91	s	CERAMIC, CHIP 0.1uF 25V
C363	1-163-038-91	s	CERAMIC, CHIP 0.1uF 25V
C364	1-126-396-11	s	ELECT, CHIP 47uF 20% 16V
C366	1-163-038-91	s	CERAMIC, CHIP 0.1uF 25V
C367	1-163-038-91	s	CERAMIC, CHIP 0.1uF 25V
C368	1-163-038-91	s	CERAMIC, CHIP 0.1uF 25V
C369	1-163-038-91	s	CERAMIC, CHIP 0.1uF 25V
C370	1-163-038-91	s	CERAMIC, CHIP 0.1uF 25V
C371	1-163-038-91	s	CERAMIC, CHIP 0.1uF 25V
C372	1-163-038-91	s	CERAMIC, CHIP 0.1uF 25V
C373	1-163-038-91	s	CERAMIC, CHIP 0.1uF 25V
C374	1-126-394-11	s	ELECT, CHIP 10uF 20% 16V
C375	1-163-038-91	s	CERAMIC, CHIP 0.1uF 25V
C376	1-163-038-91	s	CERAMIC, CHIP 0.1uF 25V
C381	1-126-396-11	s	ELECT, CHIP 47uF 20% 16V
C382	1-126-396-11	s	ELECT, CHIP 47uF 20% 16V
C383	1-163-038-91	s	CERAMIC, CHIP 0.1uF 25V
C384	1-163-038-91	s	CERAMIC, CHIP 0.1uF 25V
C385	1-163-038-91	s	CERAMIC, CHIP 0.1uF 25V
C386	1-163-038-91	s	CERAMIC, CHIP 0.1uF 25V
C387	1-126-396-11	s	ELECT, CHIP 47uF 20% 16V
C388	1-163-038-91	s	CERAMIC, CHIP 0.1uF 25V
C389	1-163-038-91	s	CERAMIC, CHIP 0.1uF 25V
C390	1-126-396-11	s	ELECT, CHIP 47uF 20% 16V
C391	1-163-038-91	s	CERAMIC, CHIP 0.1uF 25V
C392	1-163-038-91	s	CERAMIC, CHIP 0.1uF 25V
C401	1-163-259-91	s	CERAMIC, CHIP 220pF 5% 50V
C402	1-163-259-91	s	CERAMIC, CHIP 220pF 5% 50V
C403	1-163-251-11	s	CERAMIC, CHIP 100pF 5% 50V
C404	1-163-251-11	s	CERAMIC, CHIP 100pF 5% 50V
C405	1-163-139-00	s	CERAMIC, CHIP 820pF 5% 50V
C406	1-163-251-11	s	CERAMIC, CHIP 100pF 5% 50V
C407	1-126-396-11	s	ELECT, CHIP 47uF 20% 16V
C408	1-163-251-11	s	CERAMIC, CHIP 100pF 5% 50V
C409	1-126-400-11	s	ELECT, CHIP 22uF 20% 35V
C410	1-126-400-11	s	ELECT, CHIP 22uF 20% 35V
C411	1-163-235-11	s	CERAMIC, CHIP 22pF 5% 50V
C412	1-163-235-11	s	CERAMIC, CHIP 22pF 5% 50V
C413	1-126-400-11	s	ELECT, CHIP 22uF 20% 35V
C414	1-163-251-11	s	CERAMIC, CHIP 100pF 5% 50V
C415	1-163-251-11	s	CERAMIC, CHIP 100pF 5% 50V
C417	1-126-400-11	s	ELECT, CHIP 22uF 20% 35V
C419	1-126-394-11	s	ELECT, CHIP 10uF 20% 16V
C420	1-126-394-11	s	ELECT, CHIP 10uF 20% 16V
C421	1-163-275-11	s	CERAMIC, CHIP 0.001uF 5% 50V
C422	1-163-038-91	s	CERAMIC, CHIP 0.1uF 25V
C423	1-163-038-91	s	CERAMIC, CHIP 0.1uF 25V
C424	1-163-038-91	s	CERAMIC, CHIP 0.1uF 25V
C425	1-163-235-11	s	CERAMIC, CHIP 22pF 5% 50V
C501	1-163-259-91	s	CERAMIC, CHIP 220pF 5% 50V
C502	1-163-259-91	s	CERAMIC, CHIP 220pF 5% 50V
C503	1-163-251-11	s	CERAMIC, CHIP 100pF 5% 50V
C504	1-163-251-11	s	CERAMIC, CHIP 100pF 5% 50V

(DV-17 BOARD(For NTSC); Suffix -12)

Ref. No. or Q'ty	Part No.	SP	Description
C505	1-163-139-00	s	CERAMIC, CHIP 820pF 5% 50V
C506	1-163-251-11	s	CERAMIC, CHIP 100pF 5% 50V
C507	1-126-396-11	s	ELECT, CHIP 47uF 20% 16V
C508	1-163-251-11	s	CERAMIC, CHIP 100pF 5% 50V
C509	1-126-400-11	s	ELECT, CHIP 22uF 20% 35V
C510	1-126-400-11	s	ELECT, CHIP 22uF 20% 35V
C511	1-163-235-11	s	CERAMIC, CHIP 22pF 5% 50V
C512	1-163-235-11	s	CERAMIC, CHIP 22pF 5% 50V
C513	1-126-400-11	s	ELECT, CHIP 22uF 20% 35V
C514	1-163-251-11	s	CERAMIC, CHIP 100pF 5% 50V
C515	1-163-251-11	s	CERAMIC, CHIP 100pF 5% 50V
C517	1-126-400-11	s	ELECT, CHIP 22uF 20% 35V
C519	1-163-275-11	s	CERAMIC, CHIP 0.001uF 5% 50V
C520	1-126-394-11	s	ELECT, CHIP 10uF 20% 16V
C521	1-126-394-11	s	ELECT, CHIP 10uF 20% 16V
C522	1-163-038-91	s	CERAMIC, CHIP 0.1uF 25V
C523	1-163-038-91	s	CERAMIC, CHIP 0.1uF 25V
C524	1-163-038-91	s	CERAMIC, CHIP 0.1uF 25V
C525	1-163-235-11	s	CERAMIC, CHIP 22pF 5% 50V
C601	1-163-259-91	s	CERAMIC, CHIP 220pF 5% 50V
C602	1-163-259-91	s	CERAMIC, CHIP 220pF 5% 50V
C603	1-163-251-11	s	CERAMIC, CHIP 100pF 5% 50V
C604	1-163-251-11	s	CERAMIC, CHIP 100pF 5% 50V
C605	1-163-139-00	s	CERAMIC, CHIP 820pF 5% 50V
C606	1-163-251-11	s	CERAMIC, CHIP 100pF 5% 50V
C607	1-126-396-11	s	ELECT, CHIP 47uF 20% 16V
C608	1-163-251-11	s	CERAMIC, CHIP 100pF 5% 50V
C609	1-126-400-11	s	ELECT, CHIP 22uF 20% 35V
C610	1-126-400-11	s	ELECT, CHIP 22uF 20% 35V
C611	1-163-235-11	s	CERAMIC, CHIP 22pF 5% 50V
C612	1-163-235-11	s	CERAMIC, CHIP 22pF 5% 50V
C613	1-126-400-11	s	ELECT, CHIP 22uF 20% 35V
C614	1-163-251-11	s	CERAMIC, CHIP 100pF 5% 50V
C615	1-163-251-11	s	CERAMIC, CHIP 100pF 5% 50V
C617	1-126-400-11	s	ELECT, CHIP 22uF 20% 35V
C619	1-163-275-11	s	CERAMIC, CHIP 0.001uF 5% 50V
C620	1-126-394-11	s	ELECT, CHIP 10uF 20% 16V
C621	1-126-394-11	s	ELECT, CHIP 10uF 20% 16V
C622	1-163-038-91	s	CERAMIC, CHIP 0.1uF 25V
C623	1-163-038-91	s	CERAMIC, CHIP 0.1uF 25V
C624	1-163-038-91	s	CERAMIC, CHIP 0.1uF 25V
C625	1-163-235-11	s	CERAMIC, CHIP 22pF 5% 50V
C701	1-163-259-91	s	CERAMIC, CHIP 220pF 5% 50V
C702	1-163-259-91	s	CERAMIC, CHIP 220pF 5% 50V
C703	1-163-251-11	s	CERAMIC, CHIP 100pF 5% 50V
C704	1-163-251-11	s	CERAMIC, CHIP 100pF 5% 50V
C705	1-163-139-00	s	CERAMIC, CHIP 820pF 5% 50V
C706	1-163-251-11	s	CERAMIC, CHIP 100pF 5% 50V
C707	1-126-396-11	s	ELECT, CHIP 47uF 20% 16V
C708	1-163-251-11	s	CERAMIC, CHIP 100pF 5% 50V
C709	1-126-400-11	s	ELECT, CHIP 22uF 20% 35V
C710	1-126-400-11	s	ELECT, CHIP 22uF 20% 35V
C711	1-163-235-11	s	CERAMIC, CHIP 22pF 5% 50V
C712	1-163-235-11	s	CERAMIC, CHIP 22pF 5% 50V
C713	1-126-400-11	s	ELECT, CHIP 22uF 20% 35V
C714	1-163-251-11	s	CERAMIC, CHIP 100pF 5% 50V
C715	1-163-251-11	s	CERAMIC, CHIP 100pF 5% 50V
C716	1-126-400-11	s	ELECT, CHIP 22uF 20% 35V
C719	1-163-275-11	s	CERAMIC, CHIP 0.001uF 5% 50V

(DV-17 BOARD(For NTSC); Suffix -12)

Ref. No. or Q'ty	Part No.	SP	Description
C720	1-126-394-11	s	ELECT, CHIP 10uF 20% 16V
C721	1-126-394-11	s	ELECT, CHIP 10uF 20% 16V
C722	1-163-038-91	s	CERAMIC, CHIP 0.1uF 25V
C723	1-163-038-91	s	CERAMIC, CHIP 0.1uF 25V
C724	1-163-038-91	s	CERAMIC, CHIP 0.1uF 25V
C725	1-163-235-11	s	CERAMIC, CHIP 22pF 5% 50V
D151	8-719-027-95	s	DIODE HSM88WK
D152	8-719-041-39	s	DIODE KV1470
D301	8-719-041-39	s	DIODE KV1470
D302	8-719-041-39	s	DIODE KV1470
D401	8-719-801-48	s	DIODE 1SS193
D402	8-719-820-41	s	DIODE 1SS302
D403	8-719-820-41	s	DIODE 1SS302
D501	8-719-801-48	s	DIODE 1SS193
D502	8-719-820-41	s	DIODE 1SS302
D503	8-719-820-41	s	DIODE 1SS302
D801	8-719-801-48	s	DIODE 1SS193
D803	8-719-820-41	s	DIODE 1SS302
D805	8-719-820-41	s	DIODE 1SS302
D808	8-719-801-48	s	DIODE 1SS193
D810	8-719-820-41	s	DIODE 1SS302
D812	8-719-820-41	s	DIODE 1SS302
FB101	1-233-674-21	s	FILTER BLOCK, NOISE, CHIP
FB102	1-233-674-21	s	FILTER BLOCK, NOISE, CHIP
FL201	1-233-314-11	s	FILTER, NOISE, CHIP
IC10	8-759-009-07	s	IC MC14053BF
IC11	8-759-009-06	s	IC MC14052BF
IC12	8-759-702-02	s	IC NJM062M
IC13	8-759-157-17	s	IC PQ05SZ1U
IC14	8-759-172-41	s	IC L78M09T-TL
IC15	8-759-068-03	s	IC NJM79L09UA
IC101	8-759-337-30	s	IC UPD482445LGW-B10-E2
IC102	8-759-385-90	s	IC CXD2187AR
IC103	8-759-524-28	s	IC TC74VHC245FT(EL)
IC104	8-759-524-28	s	IC TC74VHC245FT(EL)
IC105	8-759-167-20	s	IC UPD42280GU-30
IC106	8-759-167-20	s	IC UPD42280GU-30
IC107	8-759-186-77	s	IC TC74VHC541F
IC108	8-759-186-77	s	IC TC74VHC541F
IC121	8-759-328-28	s	IC ZA4024
IC122	8-759-426-26	s	IC CXD8608R
IC123	8-759-328-28	s	IC ZA4024
IC124	8-752-378-68	s	IC CXD3101R
IC151	8-759-186-77	s	IC TC74VHC541F
IC152	8-752-375-05	s	IC CXD2191R-T6
IC153	8-759-186-63	s	IC TC74VHC245F(EL)
IC201	8-759-457-61	s	IC CXD8628BR
IC202	8-759-382-18	s	IC CXD2182AR
IC203	8-759-523-95	s	IC TC74VHC74FT(EL)
IC204	8-759-523-95	s	IC TC74VHC74FT(EL)
IC207	8-759-081-48	s	IC TC74VHC08F
IC208	8-759-523-78	s	IC TC74VHC00FT(EL)
IC209	8-759-186-51	s	IC TC74VHC157FS(EL)
IC210	8-759-186-84	s	IC TC74VHC86F(EL)
IC211	8-759-186-51	s	IC TC74VHC157FS(EL)
IC212	8-759-186-63	s	IC TC74VHC245F(EL)

(DV-17 BOARD(For NTSC); Suffix -12)

Ref. No. or Q'ty	Part No.	SP	Description
IC214	8-759-186-63	s	IC TC74VHC245F(EL)
IC215	8-759-271-86	s	IC TC7SH04FU
IC252	8-759-337-74	s	IC HM62V256LT8Z
IC253	8-759-337-74	s	IC HM62V256LT8Z
IC254	8-759-483-02	s	IC CXD8713Q
IC301	8-752-374-96	s	IC CXD2190R-T6
IC302	8-752-374-96	s	IC CXD2190R-T6
IC303	8-759-337-74	s	IC HM62V256LT8Z
IC304	8-759-337-74	s	IC HM62V256LT8Z
IC305	8-759-523-78	s	IC TC74VHC00FT(EL)
IC308	8-759-362-16	s	IC CXD2913AQ
IC309	8-759-362-16	s	IC CXD2913AQ
IC310	8-759-702-02	s	IC NJM062M
IC311	8-759-702-02	s	IC NJM062M
IC351	8-759-272-21	s	IC TC74VHCT541F
IC352	8-759-523-43	s	IC TC74ACT157FT(EL)
IC353	8-752-352-30	s	IC CXD2705AQ
IC354	8-752-352-30	s	IC CXD2705AQ
IC355	8-759-358-23	s	IC NN514256J-45-T
IC356	8-759-358-23	s	IC NN514256J-45-T
IC357	8-759-326-71	s	IC CXD8517Q
IC358	8-759-326-71	s	IC CXD8517Q
IC359	8-759-523-78	s	IC TC74VHC00FT(EL)
IC360	8-759-523-95	s	IC TC74VHC74FT(EL)
IC361	8-759-523-95	s	IC TC74VHC74FT(EL)
IC381	8-759-173-51	s	IC SM5872AS-ET
IC382	8-759-173-51	s	IC SM5872AS-ET
IC401	8-759-745-64	s	IC NJM4560M
IC402	8-759-745-64	s	IC NJM4560M
IC403	8-759-745-64	s	IC NJM4560M
IC404	8-759-745-64	s	IC NJM4560M
IC405	8-759-521-14	s	IC NJM5532S-D
IC501	8-759-745-64	s	IC NJM4560M
IC503	8-759-745-64	s	IC NJM4560M
IC504	8-759-745-64	s	IC NJM4560M
IC505	8-759-521-14	s	IC NJM5532S-D
IC601	8-759-745-64	s	IC NJM4560M
IC602	8-759-702-02	s	IC NJM062M
IC603	8-759-702-02	s	IC NJM062M
IC604	8-759-702-02	s	IC NJM062M
IC605	8-759-521-14	s	IC NJM5532S-D
IC701	8-759-745-64	s	IC NJM4560M
IC703	8-759-702-02	s	IC NJM062M
IC704	8-759-702-02	s	IC NJM062M
IC705	8-759-521-14	s	IC NJM5532S-D
L11	1-412-364-11	s	INDUCTOR 0uH
L101	1-410-740-31	s	INDUCTOR, CHIP 0.82uH
L103	1-410-381-11	s	INDUCTOR, CHIP 10uH
L104	1-410-381-11	s	INDUCTOR, CHIP 10uH
L122	1-410-740-31	s	INDUCTOR, CHIP 0.82uH
L151	1-410-381-11	s	INDUCTOR, CHIP 10uH
L153	1-410-381-11	s	INDUCTOR, CHIP 10uH
L154	1-410-740-31	s	INDUCTOR, CHIP 0.82uH
L201	1-410-740-31	s	INDUCTOR, CHIP 0.82uH
L203	1-410-740-31	s	INDUCTOR, CHIP 0.82uH
L251	1-410-381-11	s	INDUCTOR, CHIP 10uH
L252	1-410-381-11	s	INDUCTOR, CHIP 10uH
L301	1-410-740-31	s	INDUCTOR, CHIP 0.82uH
L303	1-410-381-11	s	INDUCTOR, CHIP 10uH

(DV-17 BOARD(For NTSC); Suffix -12)

Ref. No. or Q'ty	Part No.	SP	Description
L304	1-410-381-11	s	INDUCTOR, CHIP 10uH
L307	1-410-381-11	s	INDUCTOR, CHIP 10uH
L308	1-410-381-11	s	INDUCTOR, CHIP 10uH
L309	1-410-381-11	s	INDUCTOR, CHIP 10uH
L310	1-410-381-11	s	INDUCTOR, CHIP 10uH
L311	1-410-740-31	s	INDUCTOR, CHIP 0.82uH
L351	1-410-740-31	s	INDUCTOR, CHIP 0.82uH
L354	1-410-381-11	s	INDUCTOR, CHIP 10uH
L355	1-410-381-11	s	INDUCTOR, CHIP 10uH
L356	1-410-381-11	s	INDUCTOR, CHIP 10uH
L357	1-410-381-11	s	INDUCTOR, CHIP 10uH
L381	1-410-381-11	s	INDUCTOR, CHIP 10uH
L382	1-410-381-11	s	INDUCTOR, CHIP 10uH
L383	1-410-381-11	s	INDUCTOR, CHIP 10uH
L384	1-410-381-11	s	INDUCTOR, CHIP 10uH
LV301	1-411-984-11	s	COIL, VAR, CHIP
LV302	1-411-984-11	s	COIL, VAR, CHIP
PS10	⚠ 1-576-124-11	s	LINK, IC, CHIP 1A
PS11	⚠ 1-576-124-11	s	LINK, IC, CHIP 1A
PS12	⚠ 1-576-124-11	s	LINK, IC, CHIP 1A
PS13	⚠ 1-576-124-11	s	LINK, IC, CHIP 1A
PS14	⚠ 1-576-124-11	s	LINK, IC, CHIP 1A
PS15	⚠ 1-533-282-21	s	LINK, IC, CHIP 2A
PS16	⚠ 1-576-124-11	s	LINK, IC, CHIP 1A
PS17	⚠ 1-576-124-11	s	LINK, IC, CHIP 1A
Q10	1-801-806-11	s	TRANSISTOR DTC144EKA-T146
Q11	1-801-806-11	s	TRANSISTOR DTC144EKA-T146
Q12	1-801-806-11	s	TRANSISTOR DTC144EKA-T146
Q13	8-729-027-38	s	TRANSISTOR DTA144EKA-T146
Q14	8-729-117-32	s	TRANSISTOR 2SC4177
Q15	1-801-806-11	s	TRANSISTOR DTC144EKA-T146
Q16	8-729-202-38	s	TRANSISTOR 2SC3326N
Q17	8-729-202-38	s	TRANSISTOR 2SC3326N
Q18	8-729-202-38	s	TRANSISTOR 2SC3326N
Q19	8-729-027-38	s	TRANSISTOR DTA144EKA-T146
Q201	8-729-027-38	s	TRANSISTOR DTA144EKA-T146
Q202	8-729-027-38	s	TRANSISTOR DTA144EKA-T146
Q381	1-801-806-11	s	TRANSISTOR DTC144EKA-T146
Q382	1-801-806-11	s	TRANSISTOR DTC144EKA-T146
Q383	1-801-806-11	s	TRANSISTOR DTC144EKA-T146
Q384	1-801-806-11	s	TRANSISTOR DTC144EKA-T146
Q385	1-801-806-11	s	TRANSISTOR DTC144EKA-T146
Q386	8-729-027-38	s	TRANSISTOR DTA144EKA-T146
Q387	8-729-027-38	s	TRANSISTOR DTA144EKA-T146
Q388	8-729-027-38	s	TRANSISTOR DTA144EKA-T146
Q389	8-729-027-38	s	TRANSISTOR DTA144EKA-T146
Q390	8-729-027-38	s	TRANSISTOR DTA144EKA-T146
Q401	8-729-202-38	s	TRANSISTOR 2SC3326N
Q402	8-729-202-38	s	TRANSISTOR 2SC3326N
Q403	8-729-202-38	s	TRANSISTOR 2SC3326N
Q404	8-729-202-38	s	TRANSISTOR 2SC3326N
Q405	8-729-202-38	s	TRANSISTOR 2SC3326N
Q501	8-729-202-38	s	TRANSISTOR 2SC3326N
Q502	8-729-202-38	s	TRANSISTOR 2SC3326N
Q503	8-729-202-38	s	TRANSISTOR 2SC3326N
Q504	8-729-202-38	s	TRANSISTOR 2SC3326N
Q505	8-729-202-38	s	TRANSISTOR 2SC3326N
Q601	8-729-202-38	s	TRANSISTOR 2SC3326N

(DV-17 BOARD(For NTSC); Suffix -12)

Ref. No. or Q'ty	Part No.	SP	Description
Q602	8-729-202-38	s	TRANSISTOR 2SC3326N
Q603	8-729-202-38	s	TRANSISTOR 2SC3326N
Q604	8-729-202-38	s	TRANSISTOR 2SC3326N
Q605	8-729-202-38	s	TRANSISTOR 2SC3326N
Q701	8-729-202-38	s	TRANSISTOR 2SC3326N
Q702	8-729-202-38	s	TRANSISTOR 2SC3326N
Q703	8-729-202-38	s	TRANSISTOR 2SC3326N
Q704	8-729-202-38	s	TRANSISTOR 2SC3326N
Q705	8-729-202-38	s	TRANSISTOR 2SC3326N
R10	1-216-073-00	s	METAL, CHIP 10k 5% 1/10W
R11	1-216-073-00	s	METAL, CHIP 10k 5% 1/10W
R12	1-216-073-00	s	METAL, CHIP 10k 5% 1/10W
R13	1-216-057-00	s	METAL, CHIP 2.2k 5% 1/10W
R14	1-216-057-00	s	METAL, CHIP 2.2k 5% 1/10W
R15	1-216-025-91	s	METAL, CHIP 100 5% 1/10W
R16	1-216-081-00	s	METAL, CHIP 22k 5% 1/10W
R17	1-216-081-00	s	METAL, CHIP 22k 5% 1/10W
R18	1-216-025-91	s	METAL, CHIP 100 5% 1/10W
R20	1-216-057-00	s	METAL, CHIP 2.2k 5% 1/10W
R21	1-216-025-91	s	METAL, CHIP 100 5% 1/10W
R22	1-216-073-00	s	METAL, CHIP 10k 5% 1/10W
R23	1-216-073-00	s	METAL, CHIP 10k 5% 1/10W
R24	1-216-073-00	s	METAL, CHIP 10k 5% 1/10W
R25	1-216-073-00	s	METAL, CHIP 10k 5% 1/10W
R26	1-216-073-00	s	METAL, CHIP 10k 5% 1/10W
R27	1-216-073-00	s	METAL, CHIP 10k 5% 1/10W
R28	1-216-073-00	s	METAL, CHIP 10k 5% 1/10W
R29	1-216-073-00	s	METAL, CHIP 10k 5% 1/10W
R30	1-216-073-00	s	METAL, CHIP 10k 5% 1/10W
R31	1-216-073-00	s	METAL, CHIP 10k 5% 1/10W
R103	1-216-089-91	s	METAL, CHIP 47k 5% 1/10W
R104	1-216-089-91	s	METAL, CHIP 47k 5% 1/10W
R105	1-216-089-91	s	METAL, CHIP 47k 5% 1/10W
R106	1-216-089-91	s	METAL, CHIP 47k 5% 1/10W
R109	1-216-089-91	s	METAL, CHIP 47k 5% 1/10W
R110	1-216-025-91	s	METAL, CHIP 100 5% 1/10W
R133	1-216-025-91	s	METAL, CHIP 100 5% 1/10W
R151	1-216-025-91	s	METAL, CHIP 100 5% 1/10W
R152	1-216-295-91	s	RES, CHIP 0
R154	1-216-025-91	s	METAL, CHIP 100 5% 1/10W
R155	1-216-025-91	s	METAL, CHIP 100 5% 1/10W
R157	1-216-129-00	s	METAL, CHIP 2.2M 5% 1/10W
R158	1-216-041-00	s	METAL, CHIP 470 5% 1/10W
R159	1-216-073-00	s	METAL, CHIP 10k 5% 1/10W
R160	1-216-073-00	s	METAL, CHIP 10k 5% 1/10W
R162	1-216-065-91	s	METAL, CHIP 4.7k 5% 1/10W
R163	1-216-025-91	s	METAL, CHIP 100 5% 1/10W
R167	1-216-025-91	s	METAL, CHIP 100 5% 1/10W
R168	1-216-025-91	s	METAL, CHIP 100 5% 1/10W
R169	1-216-025-91	s	METAL, CHIP 100 5% 1/10W
R170	1-216-025-91	s	METAL, CHIP 100 5% 1/10W
R173	1-216-295-91	s	RES, CHIP 0
R205	1-216-025-91	s	METAL, CHIP 100 5% 1/10W
R211	1-216-073-00	s	METAL, CHIP 10k 5% 1/10W
R212	1-216-073-00	s	METAL, CHIP 10k 5% 1/10W
R213	1-216-025-91	s	METAL, CHIP 100 5% 1/10W
R214	1-216-025-91	s	METAL, CHIP 100 5% 1/10W
R251	1-216-025-91	s	METAL, CHIP 100 5% 1/10W
R252	1-216-025-91	s	METAL, CHIP 100 5% 1/10W

(DV-17 BOARD(For NTSC); Suffix -12)

Ref. No. or Q'ty	Part No.	SP	Description
R253	1-216-025-91	s	METAL, CHIP 100 5% 1/10W
R254	1-216-025-91	s	METAL, CHIP 100 5% 1/10W
R256	1-216-295-91	s	RES, CHIP 0
R274	1-216-295-91	s	RES, CHIP 0
R275	1-216-295-91	s	RES, CHIP 0
R276	1-216-295-91	s	RES, CHIP 0
R277	1-216-295-91	s	RES, CHIP 0
R278	1-216-295-91	s	RES, CHIP 0
R283	1-216-295-91	s	RES, CHIP 0
R301	1-216-295-91	s	RES, CHIP 0
R303	1-216-295-91	s	RES, CHIP 0
R308	1-216-073-00	s	METAL, CHIP 10k 5% 1/10W
R309	1-216-073-00	s	METAL, CHIP 10k 5% 1/10W
R310	1-216-097-91	s	METAL, CHIP 100k 5% 1/10W
R311	1-216-091-00	s	METAL, CHIP 56k 5% 1/10W
R312	1-216-097-91	s	METAL, CHIP 100k 5% 1/10W
R313	1-216-091-00	s	METAL, CHIP 56k 5% 1/10W
R314	1-216-089-91	s	METAL, CHIP 47k 5% 1/10W
R315	1-216-049-91	s	METAL, CHIP 1k 5% 1/10W
R316	1-216-089-91	s	METAL, CHIP 47k 5% 1/10W
R318	1-216-089-91	s	METAL, CHIP 47k 5% 1/10W
R319	1-216-077-00	s	METAL, CHIP 15k 5% 1/10W
R320	1-216-089-91	s	METAL, CHIP 47k 5% 1/10W
R321	1-216-089-91	s	METAL, CHIP 47k 5% 1/10W
R322	1-216-089-91	s	METAL, CHIP 47k 5% 1/10W
R323	1-216-089-91	s	METAL, CHIP 47k 5% 1/10W
R324	1-216-089-91	s	METAL, CHIP 47k 5% 1/10W
R325	1-216-089-91	s	METAL, CHIP 47k 5% 1/10W
R326	1-216-089-91	s	METAL, CHIP 47k 5% 1/10W
R327	1-216-089-91	s	METAL, CHIP 47k 5% 1/10W
R328	1-216-073-00	s	METAL, CHIP 10k 5% 1/10W
R329	1-216-295-91	s	RES, CHIP 0
R330	1-216-025-91	s	METAL, CHIP 100 5% 1/10W
R331	1-216-089-91	s	METAL, CHIP 47k 5% 1/10W
R355	1-216-049-91	s	METAL, CHIP 1k 5% 1/10W
R381	1-216-049-91	s	METAL, CHIP 1k 5% 1/10W
R382	1-216-081-00	s	METAL, CHIP 22k 5% 1/10W
R383	1-216-081-00	s	METAL, CHIP 22k 5% 1/10W
R384	1-216-081-00	s	METAL, CHIP 22k 5% 1/10W
R385	1-216-081-00	s	METAL, CHIP 22k 5% 1/10W
R386	1-216-073-00	s	METAL, CHIP 10k 5% 1/10W
R401	1-216-675-11	s	METAL, CHIP 10k 0.5% 1/10W
R402	1-216-675-11	s	METAL, CHIP 10k 0.5% 1/10W
R403	1-216-675-11	s	METAL, CHIP 10k 0.5% 1/10W
R404	1-216-675-11	s	METAL, CHIP 10k 0.5% 1/10W
R405	1-216-683-11	s	METAL, CHIP 22k 0.5% 1/10W
R406	1-216-683-11	s	METAL, CHIP 22k 0.5% 1/10W
R407	1-216-677-11	s	METAL, CHIP 12k 0.5% 1/10W
R408	1-216-677-11	s	METAL, CHIP 12k 0.5% 1/10W
R409	1-216-683-11	s	METAL, CHIP 22k 0.5% 1/10W
R410	1-216-073-00	s	METAL, CHIP 10k 5% 1/10W
R411	1-216-683-11	s	METAL, CHIP 22k 0.5% 1/10W
R412	1-216-667-11	s	METAL, CHIP 4.7k 0.5% 1/10W
R413	1-216-674-11	s	METAL, CHIP 9.1k 0.5% 1/10W
R414	1-216-667-11	s	METAL, CHIP 4.7k 0.5% 1/10W
R415	1-216-073-00	s	METAL, CHIP 10k 5% 1/10W
R416	1-216-675-11	s	METAL, CHIP 10k 0.5% 1/10W
R417	1-216-073-00	s	METAL, CHIP 10k 5% 1/10W
R418	1-216-673-11	s	METAL, CHIP 8.2k 0.5% 1/10W

(DV-17 BOARD(For NTSC); Suffix -12)

Ref. No. or Q'ty	Part No.	SP	Description
R419	1-216-674-11	s	METAL, CHIP 9.1k 0.5% 1/10W
R420	1-216-667-11	s	METAL, CHIP 4.7k 0.5% 1/10W
R421	1-216-073-00	s	METAL, CHIP 10k 5% 1/10W
R422	1-216-677-11	s	METAL, CHIP 12k 0.5% 1/10W
R423	1-216-667-11	s	METAL, CHIP 4.7k 0.5% 1/10W
R424	1-216-675-11	s	METAL, CHIP 10k 0.5% 1/10W
R425	1-216-675-11	s	METAL, CHIP 10k 0.5% 1/10W
R426	1-216-667-11	s	METAL, CHIP 4.7k 0.5% 1/10W
R427	1-216-667-11	s	METAL, CHIP 4.7k 0.5% 1/10W
R428	1-216-667-11	s	METAL, CHIP 4.7k 0.5% 1/10W
R429	1-216-667-11	s	METAL, CHIP 4.7k 0.5% 1/10W
R430	1-216-675-11	s	METAL, CHIP 10k 0.5% 1/10W
R431	1-216-675-11	s	METAL, CHIP 10k 0.5% 1/10W
R432	1-216-049-91	s	METAL, CHIP 1k 5% 1/10W
R433	1-216-675-11	s	METAL, CHIP 10k 0.5% 1/10W
R435	1-216-049-91	s	METAL, CHIP 1k 5% 1/10W
R437	1-216-619-11	s	METAL, CHIP 47 0.5% 1/10W
R438	1-216-097-91	s	METAL, CHIP 100k 5% 1/10W
R439	1-216-097-91	s	METAL, CHIP 100k 5% 1/10W
R440	1-216-675-11	s	METAL, CHIP 10k 0.5% 1/10W
R441	1-216-619-11	s	METAL, CHIP 47 0.5% 1/10W
R442	1-220-242-11	s	METAL, CHIP 22 5% 1/4W
R445	1-220-242-11	s	METAL, CHIP 22 5% 1/4W
R448	1-216-037-00	s	METAL, CHIP 330 5% 1/10W
R449	1-216-073-00	s	METAL, CHIP 10k 5% 1/10W
R501	1-216-675-11	s	METAL, CHIP 10k 0.5% 1/10W
R502	1-216-675-11	s	METAL, CHIP 10k 0.5% 1/10W
R503	1-216-675-11	s	METAL, CHIP 10k 0.5% 1/10W
R504	1-216-675-11	s	METAL, CHIP 10k 0.5% 1/10W
R505	1-216-683-11	s	METAL, CHIP 22k 0.5% 1/10W
R506	1-216-683-11	s	METAL, CHIP 22k 0.5% 1/10W
R507	1-216-677-11	s	METAL, CHIP 12k 0.5% 1/10W
R508	1-216-677-11	s	METAL, CHIP 12k 0.5% 1/10W
R509	1-216-683-11	s	METAL, CHIP 22k 0.5% 1/10W
R510	1-216-073-00	s	METAL, CHIP 10k 5% 1/10W
R511	1-216-683-11	s	METAL, CHIP 22k 0.5% 1/10W
R512	1-216-667-11	s	METAL, CHIP 4.7k 0.5% 1/10W
R513	1-216-674-11	s	METAL, CHIP 9.1k 0.5% 1/10W
R514	1-216-667-11	s	METAL, CHIP 4.7k 0.5% 1/10W
R515	1-216-073-00	s	METAL, CHIP 10k 5% 1/10W
R516	1-216-675-11	s	METAL, CHIP 10k 0.5% 1/10W
R517	1-216-073-00	s	METAL, CHIP 10k 5% 1/10W
R518	1-216-673-11	s	METAL, CHIP 8.2k 0.5% 1/10W
R519	1-216-674-11	s	METAL, CHIP 9.1k 0.5% 1/10W
R520	1-216-667-11	s	METAL, CHIP 4.7k 0.5% 1/10W
R521	1-216-073-00	s	METAL, CHIP 10k 5% 1/10W
R522	1-216-677-11	s	METAL, CHIP 12k 0.5% 1/10W
R523	1-216-667-11	s	METAL, CHIP 4.7k 0.5% 1/10W
R524	1-216-675-11	s	METAL, CHIP 10k 0.5% 1/10W
R525	1-216-675-11	s	METAL, CHIP 10k 0.5% 1/10W
R526	1-216-667-11	s	METAL, CHIP 4.7k 0.5% 1/10W
R527	1-216-667-11	s	METAL, CHIP 4.7k 0.5% 1/10W
R528	1-216-667-11	s	METAL, CHIP 4.7k 0.5% 1/10W
R529	1-216-667-11	s	METAL, CHIP 4.7k 0.5% 1/10W
R530	1-216-675-11	s	METAL, CHIP 10k 0.5% 1/10W
R531	1-216-675-11	s	METAL, CHIP 10k 0.5% 1/10W
R532	1-216-049-91	s	METAL, CHIP 1k 5% 1/10W
R533	1-216-675-11	s	METAL, CHIP 10k 0.5% 1/10W
R535	1-216-049-91	s	METAL, CHIP 1k 5% 1/10W

(DV-17 BOARD(For NTSC); Suffix -12)

Ref. No. or Q'ty	Part No.	SP	Description
R537	1-216-619-11	s	METAL, CHIP 47 0.5% 1/10W
R538	1-216-097-91	s	METAL, CHIP 100k 5% 1/10W
R539	1-216-097-91	s	METAL, CHIP 100k 5% 1/10W
R540	1-216-675-11	s	METAL, CHIP 10k 0.5% 1/10W
R541	1-216-619-11	s	METAL, CHIP 47 0.5% 1/10W
R544	1-220-242-11	s	METAL, CHIP 22 5% 1/4W
R547	1-220-242-11	s	METAL, CHIP 22 5% 1/4W
R548	1-216-037-00	s	METAL, CHIP 330 5% 1/10W
R549	1-216-073-00	s	METAL, CHIP 10k 5% 1/10W
R601	1-216-675-11	s	METAL, CHIP 10k 0.5% 1/10W
R602	1-216-675-11	s	METAL, CHIP 10k 0.5% 1/10W
R603	1-216-675-11	s	METAL, CHIP 10k 0.5% 1/10W
R604	1-216-675-11	s	METAL, CHIP 10k 0.5% 1/10W
R605	1-216-683-11	s	METAL, CHIP 22k 0.5% 1/10W
R606	1-216-683-11	s	METAL, CHIP 22k 0.5% 1/10W
R607	1-216-677-11	s	METAL, CHIP 12k 0.5% 1/10W
R608	1-216-677-11	s	METAL, CHIP 12k 0.5% 1/10W
R609	1-216-683-11	s	METAL, CHIP 22k 0.5% 1/10W
R610	1-216-073-00	s	METAL, CHIP 10k 5% 1/10W
R611	1-216-683-11	s	METAL, CHIP 22k 0.5% 1/10W
R612	1-216-667-11	s	METAL, CHIP 4.7k 0.5% 1/10W
R613	1-216-674-11	s	METAL, CHIP 9.1k 0.5% 1/10W
R614	1-216-667-11	s	METAL, CHIP 4.7k 0.5% 1/10W
R615	1-216-073-00	s	METAL, CHIP 10k 5% 1/10W
R616	1-216-675-11	s	METAL, CHIP 10k 0.5% 1/10W
R617	1-216-073-00	s	METAL, CHIP 10k 5% 1/10W
R618	1-216-673-11	s	METAL, CHIP 8.2k 0.5% 1/10W
R619	1-216-674-11	s	METAL, CHIP 9.1k 0.5% 1/10W
R620	1-216-667-11	s	METAL, CHIP 4.7k 0.5% 1/10W
R621	1-216-073-00	s	METAL, CHIP 10k 5% 1/10W
R622	1-216-677-11	s	METAL, CHIP 12k 0.5% 1/10W
R623	1-216-667-11	s	METAL, CHIP 4.7k 0.5% 1/10W
R624	1-216-675-11	s	METAL, CHIP 10k 0.5% 1/10W
R625	1-216-675-11	s	METAL, CHIP 10k 0.5% 1/10W
R626	1-216-667-11	s	METAL, CHIP 4.7k 0.5% 1/10W
R627	1-216-667-11	s	METAL, CHIP 4.7k 0.5% 1/10W
R628	1-216-667-11	s	METAL, CHIP 4.7k 0.5% 1/10W
R629	1-216-667-11	s	METAL, CHIP 4.7k 0.5% 1/10W
R630	1-216-675-11	s	METAL, CHIP 10k 0.5% 1/10W
R631	1-216-675-11	s	METAL, CHIP 10k 0.5% 1/10W
R632	1-216-049-91	s	METAL, CHIP 1k 5% 1/10W
R633	1-216-675-11	s	METAL, CHIP 10k 0.5% 1/10W
R635	1-216-049-91	s	METAL, CHIP 1k 5% 1/10W
R637	1-216-619-11	s	METAL, CHIP 47 0.5% 1/10W
R638	1-216-097-91	s	METAL, CHIP 100k 5% 1/10W
R639	1-216-097-91	s	METAL, CHIP 100k 5% 1/10W
R640	1-216-675-11	s	METAL, CHIP 10k 0.5% 1/10W
R641	1-216-619-11	s	METAL, CHIP 47 0.5% 1/10W
R644	1-220-242-11	s	METAL, CHIP 22 5% 1/4W
R645	1-220-242-11	s	METAL, CHIP 22 5% 1/4W
R648	1-216-037-00	s	METAL, CHIP 330 5% 1/10W
R649	1-216-073-00	s	METAL, CHIP 10k 5% 1/10W
R701	1-216-675-11	s	METAL, CHIP 10k 0.5% 1/10W
R702	1-216-675-11	s	METAL, CHIP 10k 0.5% 1/10W
R703	1-216-675-11	s	METAL, CHIP 10k 0.5% 1/10W
R704	1-216-675-11	s	METAL, CHIP 10k 0.5% 1/10W
R705	1-216-683-11	s	METAL, CHIP 22k 0.5% 1/10W
R706	1-216-683-11	s	METAL, CHIP 22k 0.5% 1/10W
R707	1-216-677-11	s	METAL, CHIP 12k 0.5% 1/10W

(DV-17 BOARD(For NTSC); Suffix -12)

Ref. No. or Q'ty	Part No.	SP	Description
R708	1-216-677-11	s	METAL, CHIP 12k 0.5% 1/10W
R709	1-216-683-11	s	METAL, CHIP 22k 0.5% 1/10W
R710	1-216-073-00	s	METAL, CHIP 10k 5% 1/10W
R711	1-216-683-11	s	METAL, CHIP 22k 0.5% 1/10W
R712	1-216-667-11	s	METAL, CHIP 4.7k 0.5% 1/10W
R713	1-216-674-11	s	METAL, CHIP 9.1k 0.5% 1/10W
R714	1-216-667-11	s	METAL, CHIP 4.7k 0.5% 1/10W
R715	1-216-073-00	s	METAL, CHIP 10k 5% 1/10W
R716	1-216-675-11	s	METAL, CHIP 10k 0.5% 1/10W
R717	1-216-073-00	s	METAL, CHIP 10k 5% 1/10W
R718	1-216-673-11	s	METAL, CHIP 8.2k 0.5% 1/10W
R719	1-216-674-11	s	METAL, CHIP 9.1k 0.5% 1/10W
R720	1-216-667-11	s	METAL, CHIP 4.7k 0.5% 1/10W
R721	1-216-073-00	s	METAL, CHIP 10k 5% 1/10W
R722	1-216-677-11	s	METAL, CHIP 12k 0.5% 1/10W
R723	1-216-667-11	s	METAL, CHIP 4.7k 0.5% 1/10W
R724	1-216-675-11	s	METAL, CHIP 10k 0.5% 1/10W
R725	1-216-675-11	s	METAL, CHIP 10k 0.5% 1/10W
R726	1-216-667-11	s	METAL, CHIP 4.7k 0.5% 1/10W
R727	1-216-667-11	s	METAL, CHIP 4.7k 0.5% 1/10W
R728	1-216-667-11	s	METAL, CHIP 4.7k 0.5% 1/10W
R729	1-216-667-11	s	METAL, CHIP 4.7k 0.5% 1/10W
R730	1-216-675-11	s	METAL, CHIP 10k 0.5% 1/10W
R731	1-216-675-11	s	METAL, CHIP 10k 0.5% 1/10W
R732	1-216-049-91	s	METAL, CHIP 1k 5% 1/10W
R733	1-216-675-11	s	METAL, CHIP 10k 0.5% 1/10W
R735	1-216-049-91	s	METAL, CHIP 1k 5% 1/10W
R737	1-216-619-11	s	METAL, CHIP 47 0.5% 1/10W
R738	1-216-097-91	s	METAL, CHIP 100k 5% 1/10W
R739	1-216-097-91	s	METAL, CHIP 100k 5% 1/10W
R740	1-216-675-11	s	METAL, CHIP 10k 0.5% 1/10W
R741	1-216-619-11	s	METAL, CHIP 47 0.5% 1/10W
R742	1-220-242-11	s	METAL, CHIP 22 5% 1/4W
R747	1-220-242-11	s	METAL, CHIP 22 5% 1/4W
R748	1-216-037-00	s	METAL, CHIP 330 5% 1/10W
R749	1-216-073-00	s	METAL, CHIP 10k 5% 1/10W
RB101	1-239-998-11	s	RESISTOR BLOCK, CHIP 100 x 4
RB102	1-239-998-11	s	RESISTOR BLOCK, CHIP 100 x 4
RB103	1-239-998-11	s	RESISTOR BLOCK, CHIP 100 x 4
RB104	1-239-998-11	s	RESISTOR BLOCK, CHIP 100 x 4
RB105	1-239-308-11	s	RESISTOR BLOCK, CHIP 47K x 8
RB107	1-239-998-11	s	RESISTOR BLOCK, CHIP 100 x 4
RB108	1-239-998-11	s	RESISTOR BLOCK, CHIP 100 x 4
RB109	1-239-998-11	s	RESISTOR BLOCK, CHIP 100 x 4
RB121	1-239-998-11	s	RESISTOR BLOCK, CHIP 100 x 4
RB122	1-239-998-11	s	RESISTOR BLOCK, CHIP 100 x 4
RB151	1-239-998-11	s	RESISTOR BLOCK, CHIP 100 x 4
RB153	1-239-998-11	s	RESISTOR BLOCK, CHIP 100 x 4
RB154	1-239-998-11	s	RESISTOR BLOCK, CHIP 100 x 4
RB201	1-239-998-11	s	RESISTOR BLOCK, CHIP 100 x 4
RB202	1-239-998-11	s	RESISTOR BLOCK, CHIP 100 x 4
RB203	1-239-998-11	s	RESISTOR BLOCK, CHIP 100 x 4
RB204	1-239-998-11	s	RESISTOR BLOCK, CHIP 100 x 4
RB205	1-239-998-11	s	RESISTOR BLOCK, CHIP 100 x 4
RB251	1-239-998-11	s	RESISTOR BLOCK, CHIP 100 x 4
RB252	1-239-308-11	s	RESISTOR BLOCK, CHIP 47k x 8
RB301	1-239-308-11	s	RESISTOR BLOCK, CHIP 47k x 8
RB302	1-239-998-11	s	RESISTOR BLOCK, CHIP 100 x 4

(DV-17 BOARD(For NTSC); Suffix -12)

Ref. No. or Q'ty	Part No.	SP	Description
RB303	1-239-998-11	s	RESISTOR BLOCK, CHIP 100 x 4
RB304	1-239-998-11	s	RESISTOR BLOCK, CHIP 100 x 4
RB305	1-239-998-11	s	RESISTOR BLOCK, CHIP 100 x 4
RB351	1-239-998-11	s	RESISTOR BLOCK, CHIP 100 x 4
RV401	1-241-264-11	s	RES, ADJ, METAL 10k
RV501	1-241-264-11	s	RES, ADJ, METAL 10k
RV601	1-241-264-11	s	RES, ADJ, METAL 10k
RV701	1-241-264-11	s	RES, ADJ, METAL 10k
RY401	1-515-716-11	s	RELAY (TQ2-5V)
RY501	1-515-716-11	s	RELAY (TQ2-5V)
RY601	1-515-716-11	s	RELAY (TQ2-5V)
RY701	1-515-716-11	s	RELAY (TQ2-5V)

DV-17 BOARD(For NTSC); Suffix -11

Ref. No. or Q'ty Part No. SP Description

This list corresponds to the board suffix number -11.

The parts marked * are different, depending on the product serial numbers, as shown below:
*1) Serial number; 10001 through 10420 (For DSR-60 J)
Serial number; 10001 through 10280 (For DSR-60 UC)
*2) Serial number; 10421 and higher (For DSR-60 J)
Serial number; 10281 and higher (For DSR-60 UC)

Ref. No. or Q'ty	Part No.	SP	Description
1pc	A-8312-949-B	s	MOUNTED CIRCUIT BOARD, DV-17

The DV-17 board with board suffix number -11 includes the PD-82 board.
See the list in the PD-82 board for details.

Ref. No. or Q'ty	Part No.	SP	Description
1pc	7-621-759-45	s	+PSW, 2.6x6
1pc	3-179-084-01	s	LEVER (R), PRINTED CIRCUIT BOARD
1pc	3-179-085-01	s	LEVER (L), PRINTED CIRCUIT BOARD
C10	1-163-038-91	s	CERAMIC, CHIP 0.1uF 25V
C11	1-163-038-91	s	CERAMIC, CHIP 0.1uF 25V
C12	1-163-038-91	s	CERAMIC, CHIP 0.1uF 25V
C13	1-163-038-91	s	CERAMIC, CHIP 0.1uF 25V
C14	1-163-038-91	s	CERAMIC, CHIP 0.1uF 25V
C15	1-163-038-91	s	CERAMIC, CHIP 0.1uF 25V
C16	1-163-251-11	s	CERAMIC, CHIP 100pF 5% 50V
C17	1-163-251-11	s	CERAMIC, CHIP 100pF 5% 50V
C18	1-126-394-11	s	ELECT, CHIP 10uF 20% 16V
C19	1-126-394-11	s	ELECT, CHIP 10uF 20% 16V
C20	1-126-394-11	s	ELECT, CHIP 10uF 20% 16V
C21	1-126-394-11	s	ELECT, CHIP 10uF 20% 16V
C22	1-163-038-91	s	CERAMIC, CHIP 0.1uF 25V
C23	1-163-038-91	s	CERAMIC, CHIP 0.1uF 25V
C24	1-163-038-91	s	CERAMIC, CHIP 0.1uF 25V
C25	1-163-038-91	s	CERAMIC, CHIP 0.1uF 25V
C26	1-163-038-91	s	CERAMIC, CHIP 0.1uF 25V
C27	1-163-038-91	s	CERAMIC, CHIP 0.1uF 25V
C28	1-163-038-91	s	CERAMIC, CHIP 0.1uF 25V
C29	1-163-038-91	s	CERAMIC, CHIP 0.1uF 25V
C30	1-126-396-11	s	ELECT, CHIP 47uF 20% 16V
C31	1-126-394-11	s	ELECT, CHIP 10uF 20% 16V
C32	1-126-394-11	s	ELECT, CHIP 10uF 20% 16V
C33	1-126-396-11	s	ELECT, CHIP 47uF 20% 16V
C101	1-163-038-91	s	CERAMIC, CHIP 0.1uF 25V
C102	1-163-038-91	s	CERAMIC, CHIP 0.1uF 25V
C103	1-163-038-91	s	CERAMIC, CHIP 0.1uF 25V
C104	1-163-038-91	s	CERAMIC, CHIP 0.1uF 25V
C105	1-163-038-91	s	CERAMIC, CHIP 0.1uF 25V
C106	1-163-038-91	s	CERAMIC, CHIP 0.1uF 25V
C107	1-163-227-11	s	CERAMIC, CHIP 10pF 5% 50V
C108	1-163-038-91	s	CERAMIC, CHIP 0.1uF 25V
C109	1-163-038-91	s	CERAMIC, CHIP 0.1uF 25V
C110	1-126-394-11	s	ELECT, CHIP 10uF 20% 16V
C111	1-163-038-91	s	CERAMIC, CHIP 0.1uF 25V
C112	1-163-038-91	s	CERAMIC, CHIP 0.1uF 25V
C113	1-163-038-91	s	CERAMIC, CHIP 0.1uF 25V
C114	1-163-038-91	s	CERAMIC, CHIP 0.1uF 25V
C115	1-126-394-11	s	ELECT, CHIP 10uF 20% 16V
C116	1-126-394-11	s	ELECT, CHIP 10uF 20% 16V
C117	1-163-038-91	s	CERAMIC, CHIP 0.1uF 25V
C118	1-163-038-91	s	CERAMIC, CHIP 0.1uF 25V

(DV-17 BOARD(For NTSC); Suffix -11)

Ref. No. or Q'ty	Part No.	SP	Description
C121	1-163-038-91	s	CERAMIC, CHIP 0.1uF 25V
C123	1-163-038-91	s	CERAMIC, CHIP 0.1uF 25V
C124	1-163-038-91	s	CERAMIC, CHIP 0.1uF 25V
C125	1-163-038-91	s	CERAMIC, CHIP 0.1uF 25V
C126	1-163-038-91	s	CERAMIC, CHIP 0.1uF 25V
C127	1-163-038-91	s	CERAMIC, CHIP 0.1uF 25V
C128	1-163-038-91	s	CERAMIC, CHIP 0.1uF 25V
C129	1-126-396-11	s	ELECT, CHIP 47uF 20% 16V
C130	1-163-038-91	s	CERAMIC, CHIP 0.1uF 25V
C132	1-163-038-91	s	CERAMIC, CHIP 0.1uF 25V
C133	1-163-038-91	s	CERAMIC, CHIP 0.1uF 25V
C134	1-163-038-91	s	CERAMIC, CHIP 0.1uF 25V
C135	1-163-038-91	s	CERAMIC, CHIP 0.1uF 25V
C151	1-163-275-11	s	CERAMIC, CHIP 0.001uF 5% 50V
C153	1-163-038-91	s	CERAMIC, CHIP 0.1uF 25V
C154	1-126-394-11	s	ELECT, CHIP 10uF 20% 16V
C155	1-163-038-91	s	CERAMIC, CHIP 0.1uF 25V
C156	1-163-038-91	s	CERAMIC, CHIP 0.1uF 25V
C157	1-163-038-91	s	CERAMIC, CHIP 0.1uF 25V
C158	1-163-038-91	s	CERAMIC, CHIP 0.1uF 25V
C159	1-163-038-91	s	CERAMIC, CHIP 0.1uF 25V
C160	1-163-038-91	s	CERAMIC, CHIP 0.1uF 25V
C161	1-163-038-91	s	CERAMIC, CHIP 0.1uF 25V
C162	1-163-275-11	s	CERAMIC, CHIP 0.001uF 5% 50V
C163	1-163-275-11	s	CERAMIC, CHIP 0.001uF 5% 50V
C164	1-163-275-11	s	CERAMIC, CHIP 0.001uF 5% 50V
C165	1-104-760-11	s	CERAMIC, CHIP 0.047uF 10% 50V
C166	1-135-179-21	s	TANTALUM, CHIP 2.2uF 10% 16V
C167	1-163-038-91	s	CERAMIC, CHIP 0.1uF 25V
C168	1-163-038-91	s	CERAMIC, CHIP 0.1uF 25V
C169	1-163-038-91	s	CERAMIC, CHIP 0.1uF 25V
C170	1-163-038-91	s	CERAMIC, CHIP 0.1uF 25V
C171	1-163-231-11	s	CERAMIC, CHIP 15pF 5% 50V
	*2)		
C201	1-163-038-91	s	CERAMIC, CHIP 0.1uF 25V
C202	1-126-396-11	s	ELECT, CHIP 47uF 20% 16V
C203	1-163-038-91	s	CERAMIC, CHIP 0.1uF 25V
C204	1-163-038-91	s	CERAMIC, CHIP 0.1uF 25V
C205	1-163-038-91	s	CERAMIC, CHIP 0.1uF 25V
C206	1-163-038-91	s	CERAMIC, CHIP 0.1uF 25V
C207	1-163-038-91	s	CERAMIC, CHIP 0.1uF 25V
C209	1-163-038-91	s	CERAMIC, CHIP 0.1uF 25V
C210	1-163-038-91	s	CERAMIC, CHIP 0.1uF 25V
C211	1-163-038-91	s	CERAMIC, CHIP 0.1uF 25V
C212	1-163-038-91	s	CERAMIC, CHIP 0.1uF 25V
C213	1-163-038-91	s	CERAMIC, CHIP 0.1uF 25V
C214	1-163-038-91	s	CERAMIC, CHIP 0.1uF 25V
C218	1-163-038-91	s	CERAMIC, CHIP 0.1uF 25V
C219	1-163-038-91	s	CERAMIC, CHIP 0.1uF 25V
C220	1-163-038-91	s	CERAMIC, CHIP 0.1uF 25V
C221	1-163-038-91	s	CERAMIC, CHIP 0.1uF 25V
C222	1-163-038-91	s	CERAMIC, CHIP 0.1uF 25V
C223	1-163-038-91	s	CERAMIC, CHIP 0.1uF 25V
C224	1-163-038-91	s	CERAMIC, CHIP 0.1uF 25V
C225	1-163-038-91	s	CERAMIC, CHIP 0.1uF 25V
C228	1-163-038-91	s	CERAMIC, CHIP 0.1uF 25V
C229	1-163-038-91	s	CERAMIC, CHIP 0.1uF 25V
C251	1-126-394-11	s	ELECT, CHIP 10uF 20% 16V
C252	1-163-038-91	s	CERAMIC, CHIP 0.1uF 25V
C253	1-163-038-91	s	CERAMIC, CHIP 0.1uF 25V

(DV-17 BOARD(For NTSC); Suffix -11)

Ref. No. or Q'ty	Part No.	SP	Description
C254	1-163-038-91	s	CERAMIC, CHIP 0.1uF 25V
C255	1-163-038-91	s	CERAMIC, CHIP 0.1uF 25V
C256	1-163-038-91	s	CERAMIC, CHIP 0.1uF 25V
C257	1-163-038-91	s	CERAMIC, CHIP 0.1uF 25V
C258	1-163-038-91	s	CERAMIC, CHIP 0.1uF 25V
C259	1-163-038-91	s	CERAMIC, CHIP 0.1uF 25V
C260	1-163-038-91	s	CERAMIC, CHIP 0.1uF 25V
C261	1-163-038-91	s	CERAMIC, CHIP 0.1uF 25V
C262	1-163-038-91	s	CERAMIC, CHIP 0.1uF 25V
C263	1-163-038-91	s	CERAMIC, CHIP 0.1uF 25V
C264	1-163-038-91	s	CERAMIC, CHIP 0.1uF 25V
C265	1-163-038-91	s	CERAMIC, CHIP 0.1uF 25V
C266	1-163-038-91	s	CERAMIC, CHIP 0.1uF 25V
C267	1-163-038-91	s	CERAMIC, CHIP 0.1uF 25V
C268	1-163-038-91	s	CERAMIC, CHIP 0.1uF 25V
C269	1-163-038-91	s	CERAMIC, CHIP 0.1uF 25V
C270	1-163-038-91	s	CERAMIC, CHIP 0.1uF 25V
C271	1-163-038-91	s	CERAMIC, CHIP 0.1uF 25V
C272	1-163-038-91	s	CERAMIC, CHIP 0.1uF 25V
C301	1-163-038-91	s	CERAMIC, CHIP 0.1uF 25V
C302	1-163-038-91	s	CERAMIC, CHIP 0.1uF 25V
C303	1-163-038-91	s	CERAMIC, CHIP 0.1uF 25V
C304	1-163-038-91	s	CERAMIC, CHIP 0.1uF 25V
C305	1-163-038-91	s	CERAMIC, CHIP 0.1uF 25V
C306	1-163-038-91	s	CERAMIC, CHIP 0.1uF 25V
C307	1-163-038-91	s	CERAMIC, CHIP 0.1uF 25V
C308	1-163-038-91	s	CERAMIC, CHIP 0.1uF 25V
C309	1-163-038-91	s	CERAMIC, CHIP 0.1uF 25V
C310	1-163-038-91	s	CERAMIC, CHIP 0.1uF 25V
C311	1-163-038-91	s	CERAMIC, CHIP 0.1uF 25V
C312	1-163-038-91	s	CERAMIC, CHIP 0.1uF 25V
C313	1-126-394-11	s	ELECT, CHIP 10uF 20% 16V
C314	1-126-394-11	s	ELECT, CHIP 10uF 20% 16V
C315	1-163-038-91	s	CERAMIC, CHIP 0.1uF 25V
C316	1-163-038-91	s	CERAMIC, CHIP 0.1uF 25V
C317	1-163-038-91	s	CERAMIC, CHIP 0.1uF 25V
C318	1-163-038-91	s	CERAMIC, CHIP 0.1uF 25V
C319	1-163-038-91	s	CERAMIC, CHIP 0.1uF 25V
C320	1-164-346-11	s	CERAMIC, CHIP 1uF 16V
C321	1-164-346-11	s	CERAMIC, CHIP 1uF 16V
C322	1-163-038-91	s	CERAMIC, CHIP 0.1uF 25V
C323	1-163-038-91	s	CERAMIC, CHIP 0.1uF 25V
C324	1-163-038-91	s	CERAMIC, CHIP 0.1uF 25V
C325	1-163-038-91	s	CERAMIC, CHIP 0.1uF 25V
C326	1-163-038-91	s	CERAMIC, CHIP 0.1uF 25V
C327	1-163-038-91	s	CERAMIC, CHIP 0.1uF 25V
C328	1-163-038-91	s	CERAMIC, CHIP 0.1uF 25V
C329	1-163-038-91	s	CERAMIC, CHIP 0.1uF 25V
C330	1-163-038-91	s	CERAMIC, CHIP 0.1uF 25V
C331	1-163-251-11	s	CERAMIC, CHIP 100pF 5% 50V
C332	1-163-038-91	s	CERAMIC, CHIP 0.1uF 25V
C333	1-163-251-11	s	CERAMIC, CHIP 100pF 5% 50V
C334	1-163-038-91	s	CERAMIC, CHIP 0.1uF 25V
C335	1-163-038-91	s	CERAMIC, CHIP 0.1uF 25V
C336	1-163-275-11	s	CERAMIC, CHIP 0.001uF 5% 50V
C337	1-163-275-11	s	CERAMIC, CHIP 0.001uF 5% 50V
C338	1-163-275-11	s	CERAMIC, CHIP 0.001uF 5% 50V
C339	1-163-275-11	s	CERAMIC, CHIP 0.001uF 5% 50V
C340	1-163-038-91	s	CERAMIC, CHIP 0.1uF 25V

(DV-17 BOARD(For NTSC); Suffix -11)

Ref. No. or Q'ty	Part No.	SP	Description
C341	1-163-038-91	s	CERAMIC, CHIP 0.1uF 25V
C342	1-163-038-91	s	CERAMIC, CHIP 0.1uF 25V
C343	1-163-038-91	s	CERAMIC, CHIP 0.1uF 25V
C344	1-163-038-91	s	CERAMIC, CHIP 0.1uF 25V
C345	1-163-038-91	s	CERAMIC, CHIP 0.1uF 25V
C346	1-163-038-91	s	CERAMIC, CHIP 0.1uF 25V
C347	1-163-038-91	s	CERAMIC, CHIP 0.1uF 25V
C351	1-163-038-91	s	CERAMIC, CHIP 0.1uF 25V
C353	1-163-038-91	s	CERAMIC, CHIP 0.1uF 25V
C354	1-163-038-91	s	CERAMIC, CHIP 0.1uF 25V
C355	1-163-038-91	s	CERAMIC, CHIP 0.1uF 25V
C356	1-163-038-91	s	CERAMIC, CHIP 0.1uF 25V
C357	1-163-038-91	s	CERAMIC, CHIP 0.1uF 25V
C358	1-163-038-91	s	CERAMIC, CHIP 0.1uF 25V
C359	1-163-038-91	s	CERAMIC, CHIP 0.1uF 25V
C360	1-163-038-91	s	CERAMIC, CHIP 0.1uF 25V
C361	1-163-038-91	s	CERAMIC, CHIP 0.1uF 25V
C362	1-163-038-91	s	CERAMIC, CHIP 0.1uF 25V
C363	1-163-038-91	s	CERAMIC, CHIP 0.1uF 25V
C364	1-126-394-11	s	ELECT, CHIP 10uF 20% 16V
C365	1-126-394-11	s	ELECT, CHIP 10uF 20% 16V
C366	1-163-038-91	s	CERAMIC, CHIP 0.1uF 25V
C367	1-163-038-91	s	CERAMIC, CHIP 0.1uF 25V
C368	1-163-038-91	s	CERAMIC, CHIP 0.1uF 25V
C369	1-163-038-91	s	CERAMIC, CHIP 0.1uF 25V
C370	1-163-038-91	s	CERAMIC, CHIP 0.1uF 25V
C371	1-163-038-91	s	CERAMIC, CHIP 0.1uF 25V
C372	1-163-038-91	s	CERAMIC, CHIP 0.1uF 25V
C373	1-163-038-91	s	CERAMIC, CHIP 0.1uF 25V
C374	1-126-394-11	s	ELECT, CHIP 10uF 20% 16V
C375	1-163-038-91	s	CERAMIC, CHIP 0.1uF 25V
C376	1-163-038-91	s	CERAMIC, CHIP 0.1uF 25V
C381	1-126-396-11	s	ELECT, CHIP 47uF 20% 16V
C382	1-126-396-11	s	ELECT, CHIP 47uF 20% 16V
C383	1-163-038-91	s	CERAMIC, CHIP 0.1uF 25V
C384	1-163-038-91	s	CERAMIC, CHIP 0.1uF 25V
C385	1-163-038-91	s	CERAMIC, CHIP 0.1uF 25V
C386	1-163-038-91	s	CERAMIC, CHIP 0.1uF 25V
C387	1-126-396-11	s	ELECT, CHIP 47uF 20% 16V
C388	1-163-038-91	s	CERAMIC, CHIP 0.1uF 25V
C389	1-163-038-91	s	CERAMIC, CHIP 0.1uF 25V
C390	1-126-396-11	s	ELECT, CHIP 47uF 20% 16V
C391	1-163-038-91	s	CERAMIC, CHIP 0.1uF 25V
C392	1-163-038-91	s	CERAMIC, CHIP 0.1uF 25V
C401	1-163-259-91	s	CERAMIC, CHIP 220pF 5% 50V
C402	1-163-259-91	s	CERAMIC, CHIP 220pF 5% 50V
C403	1-163-251-11	s	CERAMIC, CHIP 100pF 5% 50V
C404	1-163-251-11	s	CERAMIC, CHIP 100pF 5% 50V
C405	1-163-139-00	s	CERAMIC, CHIP 820pF 5% 50V
C406	1-163-251-11	s	CERAMIC, CHIP 100pF 5% 50V
C407	1-126-396-11	s	ELECT, CHIP 47uF 20% 16V
C408	1-163-251-11	s	CERAMIC, CHIP 100pF 5% 50V
C409	1-126-400-11	s	ELECT, CHIP 22uF 20% 35V
C410	1-126-400-11	s	ELECT, CHIP 22uF 20% 35V
C411	1-163-235-11	s	CERAMIC, CHIP 22pF 5% 50V
C412	1-163-235-11	s	CERAMIC, CHIP 22pF 5% 50V
C413	1-126-400-11	s	ELECT, CHIP 22uF 20% 35V
C414	1-163-251-11	s	CERAMIC, CHIP 100pF 5% 50V
C415	1-163-251-11	s	CERAMIC, CHIP 100pF 5% 50V

(DV-17 BOARD(For NTSC); Suffix -11)

Ref. No. or Q'ty	Part No.	SP	Description
C417	1-126-400-11	s	ELECT, CHIP 22uF 20% 35V
C419	1-126-394-11	s	ELECT, CHIP 10uF 20% 16V
C420	1-126-394-11	s	ELECT, CHIP 10uF 20% 16V
C421	1-163-275-11	s	CERAMIC, CHIP 0.001uF 5% 50V
C422	1-163-038-91	s	CERAMIC, CHIP 0.1uF 25V
C423	1-163-038-91	s	CERAMIC, CHIP 0.1uF 25V
C424	1-163-038-91	s	CERAMIC, CHIP 0.1uF 25V
C501	1-163-259-91	s	CERAMIC, CHIP 220pF 5% 50V
C502	1-163-259-91	s	CERAMIC, CHIP 220pF 5% 50V
C503	1-163-251-11	s	CERAMIC, CHIP 100pF 5% 50V
C504	1-163-251-11	s	CERAMIC, CHIP 100pF 5% 50V
C505	1-163-139-00	s	CERAMIC, CHIP 820pF 5% 50V
C506	1-163-251-11	s	CERAMIC, CHIP 100pF 5% 50V
C507	1-126-396-11	s	ELECT, CHIP 47uF 20% 16V
C508	1-163-251-11	s	CERAMIC, CHIP 100pF 5% 50V
C509	1-126-400-11	s	ELECT, CHIP 22uF 20% 35V
C510	1-126-400-11	s	ELECT, CHIP 22uF 20% 35V
C511	1-163-235-11	s	CERAMIC, CHIP 22pF 5% 50V
C512	1-163-235-11	s	CERAMIC, CHIP 22pF 5% 50V
C513	1-126-400-11	s	ELECT, CHIP 22uF 20% 35V
C514	1-163-251-11	s	CERAMIC, CHIP 100pF 5% 50V
C515	1-163-251-11	s	CERAMIC, CHIP 100pF 5% 50V
C517	1-126-400-11	s	ELECT, CHIP 22uF 20% 35V
C519	1-163-275-11	s	CERAMIC, CHIP 0.001uF 5% 50V
C520	1-126-394-11	s	ELECT, CHIP 10uF 20% 16V
C521	1-126-394-11	s	ELECT, CHIP 10uF 20% 16V
C522	1-163-038-91	s	CERAMIC, CHIP 0.1uF 25V
C523	1-163-038-91	s	CERAMIC, CHIP 0.1uF 25V
C524	1-163-038-91	s	CERAMIC, CHIP 0.1uF 25V
C601	1-163-259-91	s	CERAMIC, CHIP 220pF 5% 50V
C602	1-163-259-91	s	CERAMIC, CHIP 220pF 5% 50V
C603	1-163-251-11	s	CERAMIC, CHIP 100pF 5% 50V
C604	1-163-251-11	s	CERAMIC, CHIP 100pF 5% 50V
C605	1-163-139-00	s	CERAMIC, CHIP 820pF 5% 50V
C606	1-163-251-11	s	CERAMIC, CHIP 100pF 5% 50V
C607	1-126-396-11	s	ELECT, CHIP 47uF 20% 16V
C608	1-163-251-11	s	CERAMIC, CHIP 100pF 5% 50V
C609	1-126-400-11	s	ELECT, CHIP 22uF 20% 35V
C610	1-126-400-11	s	ELECT, CHIP 22uF 20% 35V
C611	1-163-235-11	s	CERAMIC, CHIP 22pF 5% 50V
C612	1-163-235-11	s	CERAMIC, CHIP 22pF 5% 50V
C613	1-126-400-11	s	ELECT, CHIP 22uF 20% 35V
C614	1-163-251-11	s	CERAMIC, CHIP 100pF 5% 50V
C615	1-163-251-11	s	CERAMIC, CHIP 100pF 5% 50V
C617	1-126-400-11	s	ELECT, CHIP 22uF 20% 35V
C619	1-163-275-11	s	CERAMIC, CHIP 0.001uF 5% 50V
C620	1-126-394-11	s	ELECT, CHIP 10uF 20% 16V
C621	1-126-394-11	s	ELECT, CHIP 10uF 20% 16V
C622	1-163-038-91	s	CERAMIC, CHIP 0.1uF 25V
C623	1-163-038-91	s	CERAMIC, CHIP 0.1uF 25V
C624	1-163-038-91	s	CERAMIC, CHIP 0.1uF 25V
C701	1-163-259-91	s	CERAMIC, CHIP 220pF 5% 50V
C702	1-163-259-91	s	CERAMIC, CHIP 220pF 5% 50V
C703	1-163-251-11	s	CERAMIC, CHIP 100pF 5% 50V
C704	1-163-251-11	s	CERAMIC, CHIP 100pF 5% 50V
C705	1-163-139-00	s	CERAMIC, CHIP 820pF 5% 50V
C706	1-163-251-11	s	CERAMIC, CHIP 100pF 5% 50V
C707	1-126-396-11	s	ELECT, CHIP 47uF 20% 16V
C708	1-163-251-11	s	CERAMIC, CHIP 100pF 5% 50V

(DV-17 BOARD(For NTSC); Suffix -11)

Ref. No. or Q'ty	Part No.	SP	Description
C709	1-126-400-11	s	ELECT, CHIP 22uF 20% 35V
C710	1-126-400-11	s	ELECT, CHIP 22uF 20% 35V
C711	1-163-235-11	s	CERAMIC, CHIP 22pF 5% 50V
C712	1-163-235-11	s	CERAMIC, CHIP 22pF 5% 50V
C713	1-126-400-11	s	ELECT, CHIP 22uF 20% 35V
C714	1-163-251-11	s	CERAMIC, CHIP 100pF 5% 50V
C715	1-163-251-11	s	CERAMIC, CHIP 100pF 5% 50V
C716	1-126-400-11	s	ELECT, CHIP 22uF 20% 35V
C719	1-163-275-11	s	CERAMIC, CHIP 0.001uF 5% 50V
C720	1-126-394-11	s	ELECT, CHIP 10uF 20% 16V
C721	1-126-394-11	s	ELECT, CHIP 10uF 20% 16V
C722	1-163-038-91	s	CERAMIC, CHIP 0.1uF 25V
C723	1-163-038-91	s	CERAMIC, CHIP 0.1uF 25V
C724	1-163-038-91	s	CERAMIC, CHIP 0.1uF 25V
CN1	1-774-392-11	o	CONNECTOR, BB 60P, FEMALE
D151	8-719-027-95	s	DIODE HSM88WK
D152	8-719-041-39	s	DIODE KV1470
D301	8-719-041-39	s	DIODE KV1470
D302	8-719-041-39	s	DIODE KV1470
D401	8-719-801-48	s	DIODE 1SS193
D402	8-719-820-41	s	DIODE 1SS302
D403	8-719-820-41	s	DIODE 1SS302
D501	8-719-801-48	s	DIODE 1SS193
D502	8-719-820-41	s	DIODE 1SS302
D503	8-719-820-41	s	DIODE 1SS302
D801	8-719-801-48	s	DIODE 1SS193
D803	8-719-820-41	s	DIODE 1SS302
D805	8-719-820-41	s	DIODE 1SS302
D808	8-719-801-48	s	DIODE 1SS193
D810	8-719-820-41	s	DIODE 1SS302
D812	8-719-820-41	s	DIODE 1SS302
E151	1-535-877-22	o	CHECKER, CHIP
E251	1-535-877-22	o	CHECKER, CHIP
E252	1-535-877-22	o	CHECKER, CHIP
E301	1-535-877-22	o	CHECKER, CHIP
FB101	1-233-674-11	s	FILTER BLOCK, NOISE, CHIP
FB102	1-233-674-11	s	FILTER BLOCK, NOISE, CHIP
FL201	1-233-314-11	s	FILTER, NOISE CHIP
IC10	8-759-300-71	s	IC HD14053BFP
IC11	8-759-009-06	s	IC MC14052BF
IC12	8-759-702-02	s	IC NJM062M
IC13	8-759-157-17	s	IC PQ05SZ1U
IC14	8-759-172-41	s	IC L78M09T-TL
IC15	8-759-068-03	s	IC NJM79L09UA
IC101	8-759-337-30	s	IC UPD482445LGW-B10-E2
IC102	8-759-385-90	s	IC CXD2187AR
IC103	8-759-079-87	s	IC TC74VHC245FS(EL)
IC104	8-759-079-87	s	IC TC74VHC245FS(EL)
IC105	8-759-167-20	s	IC UPD42280GU-30
IC106	8-759-167-20	s	IC UPD42280GU-30
IC107	8-759-186-77	s	IC TC74VHC541F
IC108	8-759-186-77	s	IC TC74VHC541F
IC121	8-759-328-28	s	IC ZA4024
IC122	8-759-426-26	s	IC CXD8608R
IC123	8-759-328-28	s	IC ZA4024
IC124	8-752-378-68	s	IC CXD3101R

(DV-17 BOARD(For NTSC); Suffix -11)

Ref. No. or Q'ty	Part No.	SP	Description	
IC151	8-759-186-63	s	IC TC74VHC245F(EL)	
IC152	8-752-375-05	s	IC CXD2191R-T6	
IC153	8-759-186-63	s	IC TC74VHC245F(EL)	
IC201	8-759-457-61	s	IC CXD8628BR	
IC202	8-759-382-18	s	IC CXD2182AR	
IC203	8-759-079-61	s	IC TC74VHC74FS(EL)	
IC204	8-759-079-61	s	IC TC74VHC74FS(EL)	
IC207	8-759-081-48	s	IC TC74VHC08F	
IC208	8-759-079-46	s	IC TC74VHC00FS(EL)	
IC209	8-759-186-51	s	IC TC74VHC157F	
IC210	8-759-186-84	s	IC TC74VHC86F	
IC211	8-759-186-51	s	IC TC74VHC157F	
IC212	8-759-186-63	s	IC TC74VHC245F(EL)	
IC214	8-759-186-63	s	IC TC74VHC245F(EL)	
IC252	8-759-337-74	s	IC HM62V256LT8Z	
IC253	8-759-337-74	s	IC HM62V256LT8Z	
IC301	8-752-374-96	s	IC CXD2190R-T6	
IC302	8-752-374-96	s	IC CXD2190R-T6	
IC303	8-759-337-74	s	IC HM62V256LT8Z	
IC304	8-759-337-74	s	IC HM62V256LT8Z	
IC305	8-759-079-46	s	IC TC74VHC00FS(EL)	
IC308	8-759-362-16	s	IC CXD2913AQ	
IC309	8-759-362-16	s	IC CXD2913AQ	
IC310	8-759-702-02	s	IC NJM062M	
IC311	8-759-702-02	s	IC NJM062M	
IC351	8-759-927-18	s	IC SN74HCT541NS	
IC352	8-759-335-02	s	IC TC74ACT157FS(EL)	
IC353	8-752-352-30	s	IC CXD2705AQ	
IC354	8-752-352-30	s	IC CXD2705AQ	
IC355	8-759-335-55	s	IC MSM514256B-70JS11DR1	
IC356	8-759-335-55	s	IC MSM514256B-70JS11DR1	
IC357	8-759-326-71	s	IC CXD8517Q	
IC358	8-759-326-71	s	IC CXD8517Q	
IC359	8-759-079-46	s	IC TC74VHC00FS(EL)	
IC360	8-759-079-61	s	IC TC74VHC74FS(EL)	
IC361	8-759-079-61	s	IC TC74VHC74FS(EL)	
IC381	8-759-173-51	s	IC SM5872AS-ET	
IC382	8-759-173-51	s	IC SM5872AS-ET	
IC401	8-759-745-64	s	IC NJM4560M	
IC402	8-759-745-64	s	IC NJM4560M	
IC403	8-759-745-64	s	IC NJM4560M	
IC404	8-759-745-64	s	IC NJM4560M	
IC405	8-759-521-14	s	IC NJM5532S-D	
IC501	8-759-745-64	s	IC NJM4560M	
IC503	8-759-745-64	s	IC NJM4560M	
IC504	8-759-745-64	s	IC NJM4560M	
IC505	8-759-521-14	s	IC NJM5532S-D	
IC601	8-759-745-64	s	IC NJM4560M	
IC602	8-759-702-02	s	IC NJM062M	
IC603	8-759-702-02	s	IC NJM062M	
IC604	8-759-702-02	s	IC NJM062M	
IC605	8-759-521-14	s	IC NJM5532S-D	
IC701	8-759-745-64	s	IC NJM4560M	
IC703	8-759-702-02	s	IC NJM062M	
IC704	8-759-702-02	s	IC NJM062M	
IC705	8-759-521-14	s	IC NJM5532S-D	
L11	1-412-364-21	s	FILTER, NOISE, CHIP	
L101	1-410-381-11	s	INDUCTOR, CHIP 10uH	*3)

(DV-17 BOARD(For NTSC); Suffix -11)

Ref. No. or Q'ty	Part No.	SP	Description
	1-410-740-31	s	INDUCTOR, CHIP 0.82uH
L102	1-410-381-11	s	INDUCTOR, CHIP 10uH
L103	1-410-381-11	s	INDUCTOR, CHIP 10uH
L104	1-410-381-11	s	INDUCTOR, CHIP 10uH
L122	1-410-740-31	s	INDUCTOR, CHIP 0.82uH
L151	1-410-381-11	s	INDUCTOR, CHIP 10uH
L152	1-410-381-11	s	INDUCTOR, CHIP 10uH
L153	1-410-381-11	s	INDUCTOR, CHIP 10uH
L154	1-410-740-31	s	INDUCTOR, CHIP 0.82uH
L201	1-410-740-31	s	INDUCTOR, CHIP 0.82uH
L203	1-410-740-31	s	INDUCTOR, CHIP 0.82uH
L204	1-410-381-11	s	INDUCTOR, CHIP 10uH
L251	1-410-381-11	s	INDUCTOR, CHIP 10uH
L301	1-410-381-11	s	INDUCTOR, CHIP 10uH
L302	1-410-381-11	s	INDUCTOR, CHIP 10uH
L303	1-410-381-11	s	INDUCTOR, CHIP 10uH
L304	1-410-381-11	s	INDUCTOR, CHIP 10uH
L305	1-410-381-11	s	INDUCTOR, CHIP 10uH
L306	1-410-381-11	s	INDUCTOR, CHIP 10uH
L307	1-410-381-11	s	INDUCTOR, CHIP 10uH
L308	1-410-381-11	s	INDUCTOR, CHIP 10uH
L309	1-410-381-11	s	INDUCTOR, CHIP 10uH
L310	1-410-381-11	s	INDUCTOR, CHIP 10uH
L311	1-410-740-31	s	INDUCTOR, CHIP 0.82uH
L351	1-410-381-11	s	INDUCTOR, CHIP 10uH
L352	1-410-381-11	s	INDUCTOR, CHIP 10uH
L353	1-410-381-11	s	INDUCTOR, CHIP 10uH
L354	1-410-381-11	s	INDUCTOR, CHIP 10uH
L355	1-410-381-11	s	INDUCTOR, CHIP 10uH
L356	1-410-381-11	s	INDUCTOR, CHIP 10uH
L357	1-410-381-11	s	INDUCTOR, CHIP 10uH
L381	1-410-381-11	s	INDUCTOR, CHIP 10uH
L382	1-410-381-11	s	INDUCTOR, CHIP 10uH
L383	1-410-381-11	s	INDUCTOR, CHIP 10uH
L384	1-410-381-11	s	INDUCTOR, CHIP 10uH
LV301	1-411-984-11	s	COIL, VAR, CHIP
LV302	1-411-984-11	s	COIL, VAR, CHIP
PS10	⚠ 1-576-124-11	s	LINK, IC, CHIP 1A
PS11	⚠ 1-576-124-11	s	LINK, IC, CHIP 1A
PS12	⚠ 1-576-124-11	s	LINK, IC, CHIP 1A
PS13	⚠ 1-576-124-11	s	LINK, IC, CHIP 1A
PS14	⚠ 1-576-124-11	s	LINK, IC, CHIP 1A
PS15	⚠ 1-533-282-21	s	LINK, IC, CHIP 2A
PS16	⚠ 1-576-124-11	s	LINK, IC, CHIP 1A
PS17	⚠ 1-576-124-11	s	LINK, IC, CHIP 1A
Q10	8-729-027-59	s	TRANSISTOR DTC144EKA-T146
Q11	8-729-027-59	s	TRANSISTOR DTC144EKA-T146
Q12	8-729-027-59	s	TRANSISTOR DTC144EKA-T146
Q13	8-729-027-38	s	TRANSISTOR DTA144EKA-T146
Q14	8-729-117-32	s	TRANSISTOR 2SC4177
Q15	8-729-027-59	s	TRANSISTOR DTC144EKA-T146
Q16	8-729-202-38	s	TRANSISTOR 2SC3326N
Q17	8-729-202-38	s	TRANSISTOR 2SC3326N
Q18	8-729-202-38	s	TRANSISTOR 2SC3326N
Q19	8-729-027-38	s	TRANSISTOR DTA144EKA-T146
Q201	8-729-027-38	s	TRANSISTOR DTA144EKA-T146
Q202	8-729-027-38	s	TRANSISTOR DTA144EKA-T146

(DV-17 BOARD(For NTSC); Suffix -11)

Ref. No. or Q'ty	Part No.	SP	Description
*2) Q381	8-729-027-59	s	TRANSISTOR DTC144EKA-T146
Q382	8-729-027-59	s	TRANSISTOR DTC144EKA-T146
Q383	8-729-027-59	s	TRANSISTOR DTC144EKA-T146
Q384	8-729-027-59	s	TRANSISTOR DTC144EKA-T146
Q385	8-729-027-59	s	TRANSISTOR DTC144EKA-T146
Q386	8-729-027-38	s	TRANSISTOR DTA144EKA-T146
Q387	8-729-027-38	s	TRANSISTOR DTA144EKA-T146
Q388	8-729-027-38	s	TRANSISTOR DTA144EKA-T146
Q389	8-729-027-38	s	TRANSISTOR DTA144EKA-T146
Q390	8-729-027-38	s	TRANSISTOR DTA144EKA-T146
Q401	8-729-202-38	s	TRANSISTOR 2SC3326N
Q402	8-729-202-38	s	TRANSISTOR 2SC3326N
Q403	8-729-202-38	s	TRANSISTOR 2SC3326N
Q404	8-729-202-38	s	TRANSISTOR 2SC3326N
Q405	8-729-202-38	s	TRANSISTOR 2SC3326N
Q501	8-729-202-38	s	TRANSISTOR 2SC3326N
Q502	8-729-202-38	s	TRANSISTOR 2SC3326N
Q503	8-729-202-38	s	TRANSISTOR 2SC3326N
Q504	8-729-202-38	s	TRANSISTOR 2SC3326N
Q505	8-729-202-38	s	TRANSISTOR 2SC3326N
Q601	8-729-202-38	s	TRANSISTOR 2SC3326N
Q602	8-729-202-38	s	TRANSISTOR 2SC3326N
Q603	8-729-202-38	s	TRANSISTOR 2SC3326N
Q604	8-729-202-38	s	TRANSISTOR 2SC3326N
Q605	8-729-202-38	s	TRANSISTOR 2SC3326N
Q701	8-729-202-38	s	TRANSISTOR 2SC3326N
Q702	8-729-202-38	s	TRANSISTOR 2SC3326N
Q703	8-729-202-38	s	TRANSISTOR 2SC3326N
Q704	8-729-202-38	s	TRANSISTOR 2SC3326N
Q705	8-729-202-38	s	TRANSISTOR 2SC3326N
R10	1-216-073-00	s	METAL, CHIP 10k 5% 1/10W
R11	1-216-073-00	s	METAL, CHIP 10k 5% 1/10W
R12	1-216-073-00	s	METAL, CHIP 10k 5% 1/10W
R13	1-216-057-00	s	METAL, CHIP 2.2k 5% 1/10W
R14	1-216-057-00	s	METAL, CHIP 2.2k 5% 1/10W
R15	1-216-025-91	s	METAL, CHIP 100 5% 1/10W
R16	1-216-081-00	s	METAL, CHIP 22k 5% 1/10W
R17	1-216-081-00	s	METAL, CHIP 22k 5% 1/10W
R18	1-216-025-91	s	METAL, CHIP 100 5% 1/10W
R20	1-216-057-00	s	METAL, CHIP 2.2k 5% 1/10W
R21	1-216-025-91	s	METAL, CHIP 100 5% 1/10W
R22	1-216-073-00	s	METAL, CHIP 10k 5% 1/10W
R23	1-216-073-00	s	METAL, CHIP 10k 5% 1/10W
R24	1-216-073-00	s	METAL, CHIP 10k 5% 1/10W
R25	1-216-073-00	s	METAL, CHIP 10k 5% 1/10W
R26	1-216-073-00	s	METAL, CHIP 10k 5% 1/10W
R27	1-216-073-00	s	METAL, CHIP 10k 5% 1/10W
R28	1-216-073-00	s	METAL, CHIP 10k 5% 1/10W
R29	1-216-073-00	s	METAL, CHIP 10k 5% 1/10W
R30	1-216-073-00	s	METAL, CHIP 10k 5% 1/10W
R31	1-216-073-00	s	METAL, CHIP 10k 5% 1/10W
R103	1-216-089-91	s	METAL, CHIP 47k 5% 1/10W
R104	1-216-089-91	s	METAL, CHIP 47k 5% 1/10W
R105	1-216-089-91	s	METAL, CHIP 47k 5% 1/10W
R109	1-216-089-91	s	METAL, CHIP 47k 5% 1/10W
R110	1-216-025-91	s	METAL, CHIP 100 5% 1/10W
R133	1-216-025-91	s	METAL, CHIP 100 5% 1/10W
R134	1-216-295-91	s	RES, CHIP 0
R151	1-216-025-91	s	METAL, CHIP 100 5% 1/10W

(DV-17 BOARD(For NTSC); Suffix -11)

Ref. No. or Q'ty	Part No.	SP	Description
R152	1-216-295-91	s	RES, CHIP 0
R153	1-216-089-91	s	METAL, CHIP 47k 5% 1/10W
R154	1-216-025-91	s	METAL, CHIP 100 5% 1/10W
R155	1-216-025-91	s	METAL, CHIP 100 5% 1/10W
R156	1-216-025-91	s	METAL, CHIP 100 5% 1/10W
R157	1-216-129-00	s	METAL, CHIP 2.2M 5% 1/10W
R158	1-216-041-00	s	METAL, CHIP 470 5% 1/10W
R159	1-216-073-00	s	METAL, CHIP 10k 5% 1/10W
R160	1-216-073-00	s	METAL, CHIP 10k 5% 1/10W
R162	1-216-065-00	s	METAL, CHIP 4.7k 5% 1/10W
R163	1-216-025-91	s	METAL, CHIP 100 5% 1/10W
R167	1-216-025-91	s	METAL, CHIP 100 5% 1/10W
R168	1-216-025-91	s	METAL, CHIP 100 5% 1/10W
R169	1-216-025-91	s	METAL, CHIP 100 5% 1/10W
R170	1-216-025-91	s	METAL, CHIP 100 5% 1/10W
R171	1-216-295-91	s	RES, CHIP 0
R173	1-216-295-91	s	RES, CHIP 0
R205	1-216-025-91	s	METAL, CHIP 100 5% 1/10W
R211	1-216-073-00	s	METAL, CHIP 10k 5% 1/10W
R212	1-216-073-00	s	METAL, CHIP 10k 5% 1/10W
R251	1-216-025-91	s	METAL, CHIP 100 5% 1/10W
R252	1-216-025-91	s	METAL, CHIP 100 5% 1/10W
R253	1-216-025-91	s	METAL, CHIP 100 5% 1/10W
R254	1-216-025-91	s	METAL, CHIP 100 5% 1/10W
R256	1-216-295-91	s	RES, CHIP 0
R257	1-216-295-91	s	RES, CHIP 0
R258	1-216-295-91	s	RES, CHIP 0
R259	1-216-295-91	s	RES, CHIP 0
R260	1-216-295-91	s	RES, CHIP 0
R261	1-216-089-91	s	METAL, CHIP 47k 5% 1/10W
R262	1-216-089-91	s	METAL, CHIP 47k 5% 1/10W
R263	1-216-089-91	s	METAL, CHIP 47k 5% 1/10W
R264	1-216-089-91	s	METAL, CHIP 47k 5% 1/10W
R265	1-216-089-91	s	METAL, CHIP 47k 5% 1/10W
R266	1-216-089-91	s	METAL, CHIP 47k 5% 1/10W
R267	1-216-089-91	s	METAL, CHIP 47k 5% 1/10W
R268	1-216-089-91	s	METAL, CHIP 47k 5% 1/10W
R269	1-216-089-91	s	METAL, CHIP 47k 5% 1/10W
R270	1-216-295-91	s	RES, CHIP 0
R271	1-216-295-91	s	RES, CHIP 0
R272	1-216-295-91	s	RES, CHIP 0
R273	1-216-295-91	s	RES, CHIP 0
R274	1-216-295-91	s	RES, CHIP 0
R275	1-216-295-91	s	RES, CHIP 0
R276	1-216-295-91	s	RES, CHIP 0
R277	1-216-295-91	s	RES, CHIP 0
R278	1-216-295-91	s	RES, CHIP 0
R279	1-216-089-91	s	METAL, CHIP 47k 5% 1/10W
R280	1-216-089-91	s	METAL, CHIP 47k 5% 1/10W
R281	1-216-089-91	s	METAL, CHIP 47k 5% 1/10W
R282	1-216-089-91	s	METAL, CHIP 47k 5% 1/10W
R283	1-216-295-91	s	RES, CHIP 0
R301	1-216-295-91	s	RES, CHIP 0
R303	1-216-295-91	s	RES, CHIP 0
R308	1-216-073-00	s	METAL, CHIP 10k 5% 1/10W
R309	1-216-073-00	s	METAL, CHIP 10k 5% 1/10W
R310	1-216-097-91	s	METAL, CHIP 100k 5% 1/10W
R311	1-216-091-00	s	METAL, CHIP 56k 5% 1/10W
R312	1-216-097-91	s	METAL, CHIP 100k 5% 1/10W

(DV-17 BOARD(For NTSC); Suffix -11)

Ref. No. or Q'ty	Part No.	SP	Description
R313	1-216-091-00	s	METAL, CHIP 56k 5% 1/10W
R314	1-216-089-91	s	METAL, CHIP 47k 5% 1/10W
R315	1-216-049-91	s	METAL, CHIP 1k 5% 1/10W
R316	1-216-089-91	s	METAL, CHIP 47k 5% 1/10W
R318	1-216-089-91	s	METAL, CHIP 47k 5% 1/10W
R319	1-216-077-00	s	METAL, CHIP 15k 5% 1/10W
R320	1-216-089-91	s	METAL, CHIP 47k 5% 1/10W
R321	1-216-089-91	s	METAL, CHIP 47k 5% 1/10W
R322	1-216-089-91	s	METAL, CHIP 47k 5% 1/10W
R323	1-216-089-91	s	METAL, CHIP 47k 5% 1/10W
R324	1-216-089-91	s	METAL, CHIP 47k 5% 1/10W
R325	1-216-089-91	s	METAL, CHIP 47k 5% 1/10W
R326	1-216-089-91	s	METAL, CHIP 47k 5% 1/10W
R327	1-216-089-91	s	METAL, CHIP 47k 5% 1/10W
R328	1-216-073-00	s	METAL, CHIP 10k 5% 1/10W
R329	1-216-295-91	s	RES, CHIP 0
*2) R330	1-216-025-91	s	METAL, CHIP 100 5% 1/10W
R331	1-216-089-91	s	METAL, CHIP 47k 5% 1/10W
R351	1-216-025-91	s	METAL, CHIP 100 5% 1/10W
R352	1-216-025-91	s	METAL, CHIP 100 5% 1/10W
R353	1-216-089-91	s	METAL, CHIP 47k 5% 1/10W
R354	1-216-089-91	s	METAL, CHIP 47k 5% 1/10W
R355	1-216-049-91	s	METAL, CHIP 1k 5% 1/10W
R381	1-216-049-91	s	METAL, CHIP 1k 5% 1/10W
R382	1-216-081-00	s	METAL, CHIP 22k 5% 1/10W
R383	1-216-081-00	s	METAL, CHIP 22k 5% 1/10W
R384	1-216-081-00	s	METAL, CHIP 22k 5% 1/10W
R385	1-216-081-00	s	METAL, CHIP 22k 5% 1/10W
R386	1-216-073-00	s	METAL, CHIP 10k 5% 1/10W
R401	1-216-675-11	s	METAL, CHIP 10k 0.5% 1/10W
R402	1-216-675-11	s	METAL, CHIP 10k 0.5% 1/10W
R403	1-216-675-11	s	METAL, CHIP 10k 0.5% 1/10W
R404	1-216-675-11	s	METAL, CHIP 10k 0.5% 1/10W
R405	1-216-683-11	s	METAL, CHIP 22k 0.5% 1/10W
R406	1-216-683-11	s	METAL, CHIP 22k 0.5% 1/10W
R407	1-216-677-11	s	METAL, CHIP 12k 0.5% 1/10W
R408	1-216-677-11	s	METAL, CHIP 12k 0.5% 1/10W
R409	1-216-683-11	s	METAL, CHIP 22k 0.5% 1/10W
R410	1-216-073-00	s	METAL, CHIP 10k 5% 1/10W
R411	1-216-683-11	s	METAL, CHIP 22k 0.5% 1/10W
R412	1-216-667-11	s	METAL, CHIP 4.7k 0.5% 1/10W
R413	1-216-674-11	s	METAL, CHIP 9.1k 0.5% 1/10W
R414	1-216-667-11	s	METAL, CHIP 4.7k 0.5% 1/10W
R415	1-216-073-00	s	METAL, CHIP 10k 5% 1/10W
R416	1-216-675-11	s	METAL, CHIP 10k 0.5% 1/10W
R417	1-216-073-00	s	METAL, CHIP 10k 5% 1/10W
R418	1-216-673-11	s	METAL, CHIP 8.2k 0.5% 1/10W
R419	1-216-674-11	s	METAL, CHIP 9.1k 0.5% 1/10W
R420	1-216-667-11	s	METAL, CHIP 4.7k 0.5% 1/10W
R421	1-216-073-00	s	METAL, CHIP 10k 5% 1/10W
R422	1-216-677-11	s	METAL, CHIP 12k 0.5% 1/10W
R423	1-216-667-11	s	METAL, CHIP 4.7k 0.5% 1/10W
R424	1-216-675-11	s	METAL, CHIP 10k 0.5% 1/10W
R425	1-216-675-11	s	METAL, CHIP 10k 0.5% 1/10W
R426	1-216-667-11	s	METAL, CHIP 4.7k 0.5% 1/10W
R427	1-216-667-11	s	METAL, CHIP 4.7k 0.5% 1/10W
R428	1-216-667-11	s	METAL, CHIP 4.7k 0.5% 1/10W
R429	1-216-667-11	s	METAL, CHIP 4.7k 0.5% 1/10W
R430	1-216-675-11	s	METAL, CHIP 10k 0.5% 1/10W

(DV-17 BOARD(For NTSC); Suffix -11)

Ref. No. or Q'ty	Part No.	SP	Description
R431	1-216-675-11	s	METAL, CHIP 10k 0.5% 1/10W
R432	1-216-651-11	s	METAL, CHIP 1k 0.5% 1/10W
R433	1-216-675-11	s	METAL, CHIP 10k 0.5% 1/10W
R435	1-216-651-11	s	METAL, CHIP 1k 0.5% 1/10W
R437	1-216-619-11	s	METAL, CHIP 47 0.5% 1/10W
R438	1-216-699-11	s	METAL, CHIP 100k 0.5% 1/10W
R439	1-216-699-11	s	METAL, CHIP 100k 0.5% 1/10W
R440	1-216-675-11	s	METAL, CHIP 10k 0.5% 1/10W
R441	1-216-619-11	s	METAL, CHIP 47 0.5% 1/10W
R442	1-220-242-11	s	METAL, CHIP 22 5% 1/4W
R445	1-220-242-11	s	METAL, CHIP 22 5% 1/4W
R448	1-216-037-00	s	METAL, CHIP 330 5% 1/10W
R449	1-216-073-00	s	METAL, CHIP 10k 5% 1/10W
R501	1-216-675-11	s	METAL, CHIP 10k 0.5% 1/10W
R502	1-216-675-11	s	METAL, CHIP 10k 0.5% 1/10W
R503	1-216-675-11	s	METAL, CHIP 10k 0.5% 1/10W
R504	1-216-675-11	s	METAL, CHIP 10k 0.5% 1/10W
R505	1-216-683-11	s	METAL, CHIP 22k 0.5% 1/10W
R506	1-216-683-11	s	METAL, CHIP 22k 0.5% 1/10W
R507	1-216-677-11	s	METAL, CHIP 12k 0.5% 1/10W
R508	1-216-677-11	s	METAL, CHIP 12k 0.5% 1/10W
R509	1-216-683-11	s	METAL, CHIP 22k 0.5% 1/10W
R510	1-216-073-00	s	METAL, CHIP 10k 5% 1/10W
R511	1-216-683-11	s	METAL, CHIP 22k 0.5% 1/10W
R512	1-216-667-11	s	METAL, CHIP 4.7k 0.5% 1/10W
R513	1-216-674-11	s	METAL, CHIP 9.1k 0.5% 1/10W
R514	1-216-667-11	s	METAL, CHIP 4.7k 0.5% 1/10W
R515	1-216-073-00	s	METAL, CHIP 10k 5% 1/10W
R516	1-216-675-11	s	METAL, CHIP 10k 0.5% 1/10W
R517	1-216-073-00	s	METAL, CHIP 10k 5% 1/10W
R518	1-216-673-11	s	METAL, CHIP 8.2k 0.5% 1/10W
R519	1-216-674-11	s	METAL, CHIP 9.1k 0.5% 1/10W
R520	1-216-667-11	s	METAL, CHIP 4.7k 0.5% 1/10W
R521	1-216-073-00	s	METAL, CHIP 10k 5% 1/10W
R522	1-216-677-11	s	METAL, CHIP 12k 0.5% 1/10W
R523	1-216-667-11	s	METAL, CHIP 4.7k 0.5% 1/10W
R524	1-216-675-11	s	METAL, CHIP 10k 0.5% 1/10W
R525	1-216-675-11	s	METAL, CHIP 10k 0.5% 1/10W
R526	1-216-667-11	s	METAL, CHIP 4.7k 0.5% 1/10W
R527	1-216-667-11	s	METAL, CHIP 4.7k 0.5% 1/10W
R528	1-216-667-11	s	METAL, CHIP 4.7k 0.5% 1/10W
R529	1-216-667-11	s	METAL, CHIP 4.7k 0.5% 1/10W
R530	1-216-675-11	s	METAL, CHIP 10k 0.5% 1/10W
R531	1-216-675-11	s	METAL, CHIP 10k 0.5% 1/10W
R532	1-216-651-11	s	METAL, CHIP 1k 0.5% 1/10W
R533	1-216-675-11	s	METAL, CHIP 10k 0.5% 1/10W
R535	1-216-651-11	s	METAL, CHIP 1k 0.5% 1/10W
R537	1-216-619-11	s	METAL, CHIP 47 0.5% 1/10W
R538	1-216-699-11	s	METAL, CHIP 100k 0.5% 1/10W
R539	1-216-699-11	s	METAL, CHIP 100k 0.5% 1/10W
R540	1-216-675-11	s	METAL, CHIP 10k 0.5% 1/10W
R541	1-216-619-11	s	METAL, CHIP 47 0.5% 1/10W
R544	1-220-242-11	s	METAL, CHIP 22 5% 1/4W
R547	1-220-242-11	s	METAL, CHIP 22 5% 1/4W
R548	1-216-037-00	s	METAL, CHIP 330 5% 1/10W
R549	1-216-073-00	s	METAL, CHIP 10k 5% 1/10W
R601	1-216-675-11	s	METAL, CHIP 10k 0.5% 1/10W
R602	1-216-675-11	s	METAL, CHIP 10k 0.5% 1/10W
R603	1-216-675-11	s	METAL, CHIP 10k 0.5% 1/10W

(DV-17 BOARD(For NTSC); Suffix -11)

Ref. No. or Q'ty	Part No.	SP	Description
R604	1-216-675-11	s	METAL, CHIP 10k 0.5% 1/10W
R605	1-216-683-11	s	METAL, CHIP 22k 0.5% 1/10W
R606	1-216-683-11	s	METAL, CHIP 22k 0.5% 1/10W
R607	1-216-677-11	s	METAL, CHIP 12k 0.5% 1/10W
R608	1-216-677-11	s	METAL, CHIP 12k 0.5% 1/10W
R609	1-216-683-11	s	METAL, CHIP 22k 0.5% 1/10W
R610	1-216-073-00	s	METAL, CHIP 10k 5% 1/10W
R611	1-216-683-11	s	METAL, CHIP 22k 0.5% 1/10W
R612	1-216-667-11	s	METAL, CHIP 4.7k 0.5% 1/10W
R613	1-216-674-11	s	METAL, CHIP 9.1k 0.5% 1/10W
R614	1-216-667-11	s	METAL, CHIP 4.7k 0.5% 1/10W
R615	1-216-073-00	s	METAL, CHIP 10k 5% 1/10W
R616	1-216-675-11	s	METAL, CHIP 10k 0.5% 1/10W
R617	1-216-073-00	s	METAL, CHIP 10k 5% 1/10W
R618	1-216-673-11	s	METAL, CHIP 8.2k 0.5% 1/10W
R619	1-216-674-11	s	METAL, CHIP 9.1k 0.5% 1/10W
R620	1-216-667-11	s	METAL, CHIP 4.7k 0.5% 1/10W
R621	1-216-073-00	s	METAL, CHIP 10k 5% 1/10W
R622	1-216-677-11	s	METAL, CHIP 12k 0.5% 1/10W
R623	1-216-667-11	s	METAL, CHIP 4.7k 0.5% 1/10W
R624	1-216-675-11	s	METAL, CHIP 10k 0.5% 1/10W
R625	1-216-675-11	s	METAL, CHIP 10k 0.5% 1/10W
R626	1-216-667-11	s	METAL, CHIP 4.7k 0.5% 1/10W
R627	1-216-667-11	s	METAL, CHIP 4.7k 0.5% 1/10W
R628	1-216-667-11	s	METAL, CHIP 4.7k 0.5% 1/10W
R629	1-216-667-11	s	METAL, CHIP 4.7k 0.5% 1/10W
R630	1-216-675-11	s	METAL, CHIP 10k 0.5% 1/10W
R631	1-216-675-11	s	METAL, CHIP 10k 0.5% 1/10W
R632	1-216-651-11	s	METAL, CHIP 1k 0.5% 1/10W
R633	1-216-675-11	s	METAL, CHIP 10k 0.5% 1/10W
R635	1-216-651-11	s	METAL, CHIP 1k 0.5% 1/10W
R637	1-216-619-11	s	METAL, CHIP 47 0.5% 1/10W
R638	1-216-699-11	s	METAL, CHIP 100k 0.5% 1/10W
R639	1-216-699-11	s	METAL, CHIP 100k 0.5% 1/10W
R640	1-216-675-11	s	METAL, CHIP 10k 0.5% 1/10W
R641	1-216-619-11	s	METAL, CHIP 47 0.5% 1/10W
R644	1-220-242-11	s	METAL, CHIP 22 5% 1/4W
R645	1-220-242-11	s	METAL, CHIP 22 5% 1/4W
R648	1-216-037-00	s	METAL, CHIP 330 5% 1/10W
R649	1-216-073-00	s	METAL, CHIP 10k 5% 1/10W
R701	1-216-675-11	s	METAL, CHIP 10k 0.5% 1/10W
R702	1-216-675-11	s	METAL, CHIP 10k 0.5% 1/10W
R703	1-216-675-11	s	METAL, CHIP 10k 0.5% 1/10W
R704	1-216-675-11	s	METAL, CHIP 10k 0.5% 1/10W
R705	1-216-683-11	s	METAL, CHIP 22k 0.5% 1/10W
R706	1-216-683-11	s	METAL, CHIP 22k 0.5% 1/10W
R707	1-216-677-11	s	METAL, CHIP 12k 0.5% 1/10W
R708	1-216-677-11	s	METAL, CHIP 12k 0.5% 1/10W
R709	1-216-683-11	s	METAL, CHIP 22k 0.5% 1/10W
R710	1-216-073-00	s	METAL, CHIP 10k 5% 1/10W
R711	1-216-683-11	s	METAL, CHIP 22k 0.5% 1/10W
R712	1-216-667-11	s	METAL, CHIP 4.7k 0.5% 1/10W
R713	1-216-674-11	s	METAL, CHIP 9.1k 0.5% 1/10W
R714	1-216-667-11	s	METAL, CHIP 4.7k 0.5% 1/10W
R715	1-216-073-00	s	METAL, CHIP 10k 5% 1/10W
R716	1-216-675-11	s	METAL, CHIP 10k 0.5% 1/10W
R717	1-216-073-00	s	METAL, CHIP 10k 5% 1/10W
R718	1-216-673-11	s	METAL, CHIP 8.2k 0.5% 1/10W
R719	1-216-674-11	s	METAL, CHIP 9.1k 0.5% 1/10W

(DV-17 BOARD(For NTSC); Suffix -11)

Ref. No. or Q'ty	Part No.	SP	Description
R720	1-216-667-11	s	METAL, CHIP 4.7k 0.5% 1/10W
R721	1-216-073-00	s	METAL, CHIP 10k 5% 1/10W
R722	1-216-677-11	s	METAL, CHIP 12k 0.5% 1/10W
R723	1-216-667-11	s	METAL, CHIP 4.7k 0.5% 1/10W
R724	1-216-675-11	s	METAL, CHIP 10k 0.5% 1/10W
R725	1-216-675-11	s	METAL, CHIP 10k 0.5% 1/10W
R726	1-216-667-11	s	METAL, CHIP 4.7k 0.5% 1/10W
R727	1-216-667-11	s	METAL, CHIP 4.7k 0.5% 1/10W
R728	1-216-667-11	s	METAL, CHIP 4.7k 0.5% 1/10W
R729	1-216-667-11	s	METAL, CHIP 4.7k 0.5% 1/10W
R730	1-216-675-11	s	METAL, CHIP 10k 0.5% 1/10W
R731	1-216-675-11	s	METAL, CHIP 10k 0.5% 1/10W
R732	1-216-651-11	s	METAL, CHIP 1k 0.5% 1/10W
R733	1-216-675-11	s	METAL, CHIP 10k 0.5% 1/10W
R735	1-216-651-11	s	METAL, CHIP 1k 0.5% 1/10W
R737	1-216-619-11	s	METAL, CHIP 47 0.5% 1/10W
R738	1-216-699-11	s	METAL, CHIP 100k 0.5% 1/10W
R739	1-216-699-11	s	METAL, CHIP 100k 0.5% 1/10W
R740	1-216-675-11	s	METAL, CHIP 10k 0.5% 1/10W
R741	1-216-619-11	s	METAL, CHIP 47 0.5% 1/10W
R742	1-220-242-11	s	METAL, CHIP 22 5% 1/4W
R747	1-220-242-11	s	METAL, CHIP 22 5% 1/4W
R748	1-216-037-00	s	METAL, CHIP 330 5% 1/10W
R749	1-216-073-00	s	METAL, CHIP 10k 5% 1/10W
RB101	1-239-998-11	s	RESISTOR BLOCK, CHIP 100 x 4
RB102	1-239-998-11	s	RESISTOR BLOCK, CHIP 100 x 4
RB103	1-239-998-11	s	RESISTOR BLOCK, CHIP 100 x 4
RB104	1-239-998-11	s	RESISTOR BLOCK, CHIP 100 x 4
RB105	1-239-308-11	s	RESISTOR BLOCK, CHIP 47k x 8
RB107	1-239-998-11	s	RESISTOR BLOCK, CHIP 100 x 4
RB108	1-239-998-11	s	RESISTOR BLOCK, CHIP 100 x 4
RB109	1-239-998-11	s	RESISTOR BLOCK, CHIP 100 x 4
RB121	1-239-998-11	s	RESISTOR BLOCK, CHIP 100 x 4
RB122	1-239-998-11	s	RESISTOR BLOCK, CHIP 100 x 4
RB151	1-239-998-11	s	RESISTOR BLOCK, CHIP 100 x 4
RB153	1-239-998-11	s	RESISTOR BLOCK, CHIP 100 x 4
RB154	1-239-998-11	s	RESISTOR BLOCK, CHIP 100 x 4
RB201	1-239-998-11	s	RESISTOR BLOCK, CHIP 100 x 4
RB202	1-239-998-11	s	RESISTOR BLOCK, CHIP 100 x 4
RB203	1-239-998-11	s	RESISTOR BLOCK, CHIP 100 x 4
RB204	1-239-998-11	s	RESISTOR BLOCK, CHIP 100 x 4
RB205	1-239-998-11	s	RESISTOR BLOCK, CHIP 100 x 4
RB206	1-239-998-11	s	RESISTOR BLOCK, CHIP 100 x 4
RB251	1-239-998-11	s	RESISTOR BLOCK, CHIP 100 x 4
RB252	1-239-308-11	s	RESISTOR BLOCK, CHIP 47k x 8
RB301	1-239-308-11	s	RESISTOR BLOCK, CHIP 47k x 8
RB302	1-239-998-11	s	RESISTOR BLOCK, CHIP 100 x 4
RB303	1-239-998-11	s	RESISTOR BLOCK, CHIP 100 x 4
RB304	1-239-998-11	s	RESISTOR BLOCK, CHIP 100 x 4
RB305	1-239-998-11	s	RESISTOR BLOCK, CHIP 100 x 4
RB351	1-239-998-11	s	RESISTOR BLOCK, CHIP 100 x 4
RV401	1-241-264-11	s	RES, ADJ, METAL 10k
RV501	1-241-264-11	s	RES, ADJ, METAL 10k
RV601	1-241-264-11	s	RES, ADJ, METAL 10k
RV701	1-241-264-11	s	RES, ADJ, METAL 10k
RY401	1-515-716-11	s	RELAY
RY501	1-515-716-11	s	RELAY
RY601	1-515-716-11	s	RELAY

(DV-17 BOARD(For NTSC); Suffix -11)

Ref. No. or Q'ty	Part No.	SP	Description
RY701	1-515-716-11	s	RELAY
TP301	1-535-877-22	o	CHECKER, CHIP
TP302	1-535-877-22	o	CHECKER, CHIP

DV-17 BOARD(For PAL); Suffix -13, 14

Ref. No. or Q'ty	Part No.	SP	Description

This list corresponds to the board suffix numbers -13 and 14.

Ref. No. or Q'ty	Part No.	SP	Description
1pc	A-8312-964-B	s	MOUNTED CIRCUIT BOARD, DV-17A
1pc	7-621-759-45	s	+PSW, 2.6x6
1pc	3-179-084-01	s	LEVER (R), PRINTED CIRCUIT BOARD
1pc	3-179-085-01	s	LEVER (L), PRINTED CIRCUIT BOARD
C10	1-163-038-91	s	CERAMIC, CHIP 0.1uF 25V
C11	1-163-038-91	s	CERAMIC, CHIP 0.1uF 25V
C12	1-163-038-91	s	CERAMIC, CHIP 0.1uF 25V
C13	1-163-038-91	s	CERAMIC, CHIP 0.1uF 25V
C14	1-163-038-91	s	CERAMIC, CHIP 0.1uF 25V
C15	1-163-038-91	s	CERAMIC, CHIP 0.1uF 25V
C16	1-163-251-11	s	CERAMIC, CHIP 100pF 5% 50V
C17	1-163-251-11	s	CERAMIC, CHIP 100pF 5% 50V
C18	1-126-394-11	s	ELECT, CHIP 10uF 20% 16V
C19	1-126-394-11	s	ELECT, CHIP 10uF 20% 16V
C20	1-126-394-11	s	ELECT, CHIP 10uF 20% 16V
C21	1-126-394-11	s	ELECT, CHIP 10uF 20% 16V
C22	1-163-038-91	s	CERAMIC, CHIP 0.1uF 25V
C23	1-163-038-91	s	CERAMIC, CHIP 0.1uF 25V
C24	1-163-038-91	s	CERAMIC, CHIP 0.1uF 25V
C27	1-163-038-91	s	CERAMIC, CHIP 0.1uF 25V
C28	1-163-038-91	s	CERAMIC, CHIP 0.1uF 25V
C29	1-163-038-91	s	CERAMIC, CHIP 0.1uF 25V
C30	1-126-396-11	s	ELECT, CHIP 47uF 20% 16V
C31	1-126-394-11	s	ELECT, CHIP 10uF 20% 16V
C32	1-126-394-11	s	ELECT, CHIP 10uF 20% 16V
C33	1-126-396-11	s	ELECT, CHIP 47uF 20% 16V
C101	1-163-038-91	s	CERAMIC, CHIP 0.1uF 25V
C102	1-163-038-91	s	CERAMIC, CHIP 0.1uF 25V
C103	1-163-038-91	s	CERAMIC, CHIP 0.1uF 25V
C104	1-163-038-91	s	CERAMIC, CHIP 0.1uF 25V
C105	1-163-038-91	s	CERAMIC, CHIP 0.1uF 25V
C106	1-163-038-91	s	CERAMIC, CHIP 0.1uF 25V
C107	1-163-227-11	s	CERAMIC, CHIP 10pF 5% 50V
C108	1-163-038-91	s	CERAMIC, CHIP 0.1uF 25V
C109	1-163-038-91	s	CERAMIC, CHIP 0.1uF 25V
C110	1-126-394-11	s	ELECT, CHIP 10uF 20% 16V
C111	1-163-038-91	s	CERAMIC, CHIP 0.1uF 25V
C112	1-163-038-91	s	CERAMIC, CHIP 0.1uF 25V
C113	1-163-038-91	s	CERAMIC, CHIP 0.1uF 25V
C114	1-163-038-91	s	CERAMIC, CHIP 0.1uF 25V
C115	1-163-038-91	s	CERAMIC, CHIP 0.1uF 25V
C116	1-163-038-91	s	CERAMIC, CHIP 0.1uF 25V
C117	1-163-038-91	s	CERAMIC, CHIP 0.1uF 25V
C118	1-163-038-91	s	CERAMIC, CHIP 0.1uF 25V
C119	1-163-038-91	s	CERAMIC, CHIP 0.1uF 25V
C121	1-163-038-91	s	CERAMIC, CHIP 0.1uF 25V
C123	1-163-038-91	s	CERAMIC, CHIP 0.1uF 25V
C124	1-163-038-91	s	CERAMIC, CHIP 0.1uF 25V
C125	1-163-038-91	s	CERAMIC, CHIP 0.1uF 25V
C126	1-163-038-91	s	CERAMIC, CHIP 0.1uF 25V
C127	1-163-038-91	s	CERAMIC, CHIP 0.1uF 25V
C128	1-163-038-91	s	CERAMIC, CHIP 0.1uF 25V
C129	1-126-396-11	s	ELECT, CHIP 47uF 20% 16V
C130	1-163-038-91	s	CERAMIC, CHIP 0.1uF 25V
C132	1-163-038-91	s	CERAMIC, CHIP 0.1uF 25V

(DV-17 BOARD(For PAL); Suffix -13, 14)

Ref. No. or Q'ty	Part No.	SP	Description
C133	1-163-038-91	s	CERAMIC, CHIP 0.1uF 25V
C134	1-163-038-91	s	CERAMIC, CHIP 0.1uF 25V
C135	1-163-038-91	s	CERAMIC, CHIP 0.1uF 25V
C136	1-163-038-91	s	CERAMIC, CHIP 0.1uF 25V
C137	1-163-038-91	s	CERAMIC, CHIP 0.1uF 25V
C138	1-163-038-91	s	CERAMIC, CHIP 0.1uF 25V
C139	1-163-038-91	s	CERAMIC, CHIP 0.1uF 25V
C151	1-163-275-11	s	CERAMIC, CHIP 0.001uF 5% 50V
C153	1-163-038-91	s	CERAMIC, CHIP 0.1uF 25V
C154	1-126-396-11	s	ELECT, CHIP 47uF 20% 16V
C155	1-163-038-91	s	CERAMIC, CHIP 0.1uF 25V
C156	1-163-038-91	s	CERAMIC, CHIP 0.1uF 25V
C157	1-163-038-91	s	CERAMIC, CHIP 0.1uF 25V
C158	1-163-038-91	s	CERAMIC, CHIP 0.1uF 25V
C159	1-163-038-91	s	CERAMIC, CHIP 0.1uF 25V
C160	1-163-038-91	s	CERAMIC, CHIP 0.1uF 25V
C161	1-163-038-91	s	CERAMIC, CHIP 0.1uF 25V
C162	1-163-275-11	s	CERAMIC, CHIP 0.001uF 5% 50V
C163	1-163-275-11	s	CERAMIC, CHIP 0.001uF 5% 50V
C164	1-163-275-11	s	CERAMIC, CHIP 0.001uF 5% 50V
C165	1-104-760-11	s	CERAMIC, CHIP 0.047uF 10% 50V
C166	1-135-179-21	s	TANTALUM, CHIP 2.2uF 10% 16V
C167	1-163-038-91	s	CERAMIC, CHIP 0.1uF 25V
C168	1-163-038-91	s	CERAMIC, CHIP 0.1uF 25V
C169	1-163-038-91	s	CERAMIC, CHIP 0.1uF 25V
C170	1-163-038-91	s	CERAMIC, CHIP 0.1uF 25V
C171	1-163-231-11	s	CERAMIC, CHIP 15pF 5% 50V
C201	1-163-038-91	s	CERAMIC, CHIP 0.1uF 25V
C202	1-126-396-11	s	ELECT, CHIP 47uF 20% 16V
C203	1-163-038-91	s	CERAMIC, CHIP 0.1uF 25V
C204	1-163-038-91	s	CERAMIC, CHIP 0.1uF 25V
C205	1-163-038-91	s	CERAMIC, CHIP 0.1uF 25V
C206	1-163-038-91	s	CERAMIC, CHIP 0.1uF 25V
C214	1-163-038-91	s	CERAMIC, CHIP 0.1uF 25V
C218	1-163-038-91	s	CERAMIC, CHIP 0.1uF 25V
C219	1-163-038-91	s	CERAMIC, CHIP 0.1uF 25V
C220	1-163-038-91	s	CERAMIC, CHIP 0.1uF 25V
C221	1-163-038-91	s	CERAMIC, CHIP 0.1uF 25V
C222	1-163-038-91	s	CERAMIC, CHIP 0.1uF 25V
C226	1-126-396-11	s	ELECT, CHIP 47uF 20% 16V
C252	1-163-038-91	s	CERAMIC, CHIP 0.1uF 25V
C254	1-163-038-91	s	CERAMIC, CHIP 0.1uF 25V
C255	1-163-038-91	s	CERAMIC, CHIP 0.1uF 25V
C256	1-163-038-91	s	CERAMIC, CHIP 0.1uF 25V
C257	1-163-038-91	s	CERAMIC, CHIP 0.1uF 25V
C258	1-163-038-91	s	CERAMIC, CHIP 0.1uF 25V
C259	1-163-038-91	s	CERAMIC, CHIP 0.1uF 25V
C260	1-163-038-91	s	CERAMIC, CHIP 0.1uF 25V
C261	1-163-038-91	s	CERAMIC, CHIP 0.1uF 25V
C262	1-163-038-91	s	CERAMIC, CHIP 0.1uF 25V
C263	1-163-038-91	s	CERAMIC, CHIP 0.1uF 25V
C264	1-163-038-91	s	CERAMIC, CHIP 0.1uF 25V
C265	1-163-038-91	s	CERAMIC, CHIP 0.1uF 25V
C266	1-163-038-91	s	CERAMIC, CHIP 0.1uF 25V
C267	1-163-038-91	s	CERAMIC, CHIP 0.1uF 25V
C268	1-163-038-91	s	CERAMIC, CHIP 0.1uF 25V
C269	1-163-038-91	s	CERAMIC, CHIP 0.1uF 25V
C270	1-163-038-91	s	CERAMIC, CHIP 0.1uF 25V
C272	1-163-038-91	s	CERAMIC, CHIP 0.1uF 25V

(DV-17 BOARD(For PAL); Suffix -13, 14)

Ref. No. or Q'ty	Part No.	SP	Description
C301	1-163-038-91	s	CERAMIC, CHIP 0.1uF 25V
C302	1-163-038-91	s	CERAMIC, CHIP 0.1uF 25V
C303	1-163-038-91	s	CERAMIC, CHIP 0.1uF 25V
C304	1-163-038-91	s	CERAMIC, CHIP 0.1uF 25V
C305	1-163-038-91	s	CERAMIC, CHIP 0.1uF 25V
C306	1-163-038-91	s	CERAMIC, CHIP 0.1uF 25V
C307	1-163-038-91	s	CERAMIC, CHIP 0.1uF 25V
C308	1-163-038-91	s	CERAMIC, CHIP 0.1uF 25V
C309	1-163-038-91	s	CERAMIC, CHIP 0.1uF 25V
C310	1-163-038-91	s	CERAMIC, CHIP 0.1uF 25V
C312	1-163-235-11	s	CERAMIC, CHIP 22pF 5% 50V
C313	1-126-396-11	s	ELECT, CHIP 47uF 20% 16V
C315	1-163-038-91	s	CERAMIC, CHIP 0.1uF 25V
C316	1-163-038-91	s	CERAMIC, CHIP 0.1uF 25V
C317	1-163-038-91	s	CERAMIC, CHIP 0.1uF 25V
C318	1-163-038-91	s	CERAMIC, CHIP 0.1uF 25V
C319	1-163-038-91	s	CERAMIC, CHIP 0.1uF 25V
C321	1-164-346-11	s	CERAMIC, CHIP 1uF 16V
C322	1-107-687-11	s	TANTALUM, CHIP 3.3uF 20% 20V
C323	1-107-687-11	s	TANTALUM, CHIP 3.3uF 20% 20V
C324	1-163-038-91	s	CERAMIC, CHIP 0.1uF 25V
C325	1-163-038-91	s	CERAMIC, CHIP 0.1uF 25V
C326	1-163-038-91	s	CERAMIC, CHIP 0.1uF 25V
C327	1-163-038-91	s	CERAMIC, CHIP 0.1uF 25V
C328	1-163-038-91	s	CERAMIC, CHIP 0.1uF 25V
C329	1-163-038-91	s	CERAMIC, CHIP 0.1uF 25V
C330	1-163-038-91	s	CERAMIC, CHIP 0.1uF 25V
C331	1-163-251-11	s	CERAMIC, CHIP 100pF 5% 50V
C332	1-163-038-91	s	CERAMIC, CHIP 0.1uF 25V
C333	1-163-251-11	s	CERAMIC, CHIP 100pF 5% 50V
C334	1-163-038-91	s	CERAMIC, CHIP 0.1uF 25V
C335	1-163-038-91	s	CERAMIC, CHIP 0.1uF 25V
C336	1-163-275-11	s	CERAMIC, CHIP 0.001uF 5% 50V
C337	1-163-275-11	s	CERAMIC, CHIP 0.001uF 5% 50V
C338	1-163-275-11	s	CERAMIC, CHIP 0.001uF 5% 50V
C339	1-163-275-11	s	CERAMIC, CHIP 0.001uF 5% 50V
C340	1-163-038-91	s	CERAMIC, CHIP 0.1uF 25V
C341	1-163-038-91	s	CERAMIC, CHIP 0.1uF 25V
C342	1-163-038-91	s	CERAMIC, CHIP 0.1uF 25V
C343	1-163-038-91	s	CERAMIC, CHIP 0.1uF 25V
C344	1-163-038-91	s	CERAMIC, CHIP 0.1uF 25V
C345	1-163-038-91	s	CERAMIC, CHIP 0.1uF 25V
C346	1-163-038-91	s	CERAMIC, CHIP 0.1uF 25V
C347	1-163-038-91	s	CERAMIC, CHIP 0.1uF 25V
C348	1-163-038-91	s	CERAMIC, CHIP 0.1uF 25V
C351	1-163-038-91	s	CERAMIC, CHIP 0.1uF 25V
C353	1-163-038-91	s	CERAMIC, CHIP 0.1uF 25V
C354	1-163-038-91	s	CERAMIC, CHIP 0.1uF 25V
C355	1-163-038-91	s	CERAMIC, CHIP 0.1uF 25V
C356	1-163-038-91	s	CERAMIC, CHIP 0.1uF 25V
C357	1-163-038-91	s	CERAMIC, CHIP 0.1uF 25V
C358	1-163-038-91	s	CERAMIC, CHIP 0.1uF 25V
C359	1-163-038-91	s	CERAMIC, CHIP 0.1uF 25V
C360	1-163-038-91	s	CERAMIC, CHIP 0.1uF 25V
C361	1-163-038-91	s	CERAMIC, CHIP 0.1uF 25V
C362	1-163-038-91	s	CERAMIC, CHIP 0.1uF 25V
C363	1-163-038-91	s	CERAMIC, CHIP 0.1uF 25V
C364	1-126-396-11	s	ELECT, CHIP 47uF 20% 16V
C366	1-163-038-91	s	CERAMIC, CHIP 0.1uF 25V

(DV-17 BOARD(For PAL); Suffix -13, 14)

Ref. No. or Q'ty	Part No.	SP	Description
C367	1-163-038-91	s	CERAMIC, CHIP 0.1uF 25V
C368	1-163-038-91	s	CERAMIC, CHIP 0.1uF 25V
C369	1-163-038-91	s	CERAMIC, CHIP 0.1uF 25V
C370	1-163-038-91	s	CERAMIC, CHIP 0.1uF 25V
C371	1-163-038-91	s	CERAMIC, CHIP 0.1uF 25V
C372	1-163-038-91	s	CERAMIC, CHIP 0.1uF 25V
C373	1-163-038-91	s	CERAMIC, CHIP 0.1uF 25V
C375	1-163-038-91	s	CERAMIC, CHIP 0.1uF 25V
C376	1-163-038-91	s	CERAMIC, CHIP 0.1uF 25V
C378	1-163-038-91	s	CERAMIC, CHIP 0.1uF 25V
C379	1-163-038-91	s	CERAMIC, CHIP 0.1uF 25V
C381	1-126-396-11	s	ELECT, CHIP 47uF 20% 16V
C382	1-126-396-11	s	ELECT, CHIP 47uF 20% 16V
C383	1-163-038-91	s	CERAMIC, CHIP 0.1uF 25V
C384	1-163-038-91	s	CERAMIC, CHIP 0.1uF 25V
C385	1-163-038-91	s	CERAMIC, CHIP 0.1uF 25V
C386	1-163-038-91	s	CERAMIC, CHIP 0.1uF 25V
C387	1-126-396-11	s	ELECT, CHIP 47uF 20% 16V
C388	1-163-038-91	s	CERAMIC, CHIP 0.1uF 25V
C389	1-163-038-91	s	CERAMIC, CHIP 0.1uF 25V
C390	1-126-396-11	s	ELECT, CHIP 47uF 20% 16V
C391	1-163-038-91	s	CERAMIC, CHIP 0.1uF 25V
C392	1-163-038-91	s	CERAMIC, CHIP 0.1uF 25V
C401	1-163-259-91	s	CERAMIC, CHIP 220pF 5% 50V
C402	1-163-259-91	s	CERAMIC, CHIP 220pF 5% 50V
C403	1-163-251-11	s	CERAMIC, CHIP 100pF 5% 50V
C404	1-163-251-11	s	CERAMIC, CHIP 100pF 5% 50V
C405	1-163-139-00	s	CERAMIC, CHIP 820pF 5% 50V
C406	1-163-251-11	s	CERAMIC, CHIP 100pF 5% 50V
C407	1-126-396-11	s	ELECT, CHIP 47uF 20% 16V
C408	1-163-251-11	s	CERAMIC, CHIP 100pF 5% 50V
C409	1-126-400-11	s	ELECT, CHIP 22uF 20% 35V
C410	1-126-400-11	s	ELECT, CHIP 22uF 20% 35V
C411	1-163-235-11	s	CERAMIC, CHIP 22pF 5% 50V
C412	1-163-235-11	s	CERAMIC, CHIP 22pF 5% 50V
C413	1-126-400-11	s	ELECT, CHIP 22uF 20% 35V
C414	1-163-251-11	s	CERAMIC, CHIP 100pF 5% 50V
C415	1-163-251-11	s	CERAMIC, CHIP 100pF 5% 50V
C417	1-126-400-11	s	ELECT, CHIP 22uF 20% 35V
C419	1-126-394-11	s	ELECT, CHIP 10uF 20% 16V
C420	1-126-394-11	s	ELECT, CHIP 10uF 20% 16V
C421	1-163-275-11	s	CERAMIC, CHIP 0.001uF 5% 50V
C422	1-163-038-91	s	CERAMIC, CHIP 0.1uF 25V
C423	1-163-038-91	s	CERAMIC, CHIP 0.1uF 25V
C424	1-163-038-91	s	CERAMIC, CHIP 0.1uF 25V
C425	1-163-235-11	s	CERAMIC, CHIP 22pF 5% 50V
C501	1-163-259-91	s	CERAMIC, CHIP 220pF 5% 50V
C502	1-163-259-91	s	CERAMIC, CHIP 220pF 5% 50V
C503	1-163-251-11	s	CERAMIC, CHIP 100pF 5% 50V
C504	1-163-251-11	s	CERAMIC, CHIP 100pF 5% 50V
C505	1-163-139-00	s	CERAMIC, CHIP 820pF 5% 50V
C506	1-163-251-11	s	CERAMIC, CHIP 100pF 5% 50V
C507	1-126-396-11	s	ELECT, CHIP 47uF 20% 16V
C508	1-163-251-11	s	CERAMIC, CHIP 100pF 5% 50V
C509	1-126-400-11	s	ELECT, CHIP 22uF 20% 35V
C510	1-126-400-11	s	ELECT, CHIP 22uF 20% 35V
C511	1-163-235-11	s	CERAMIC, CHIP 22pF 5% 50V
C512	1-163-235-11	s	CERAMIC, CHIP 22pF 5% 50V
C513	1-126-400-11	s	ELECT, CHIP 22uF 20% 35V

(DV-17 BOARD(For PAL); Suffix -13, 14)

Ref. No. or Q'ty	Part No.	SP	Description
C514	1-163-251-11	s	CERAMIC, CHIP 100pF 5% 50V
C515	1-163-251-11	s	CERAMIC, CHIP 100pF 5% 50V
C517	1-126-400-11	s	ELECT, CHIP 22uF 20% 35V
C519	1-163-275-11	s	CERAMIC, CHIP 0.001uF 5% 50V
C520	1-126-394-11	s	ELECT, CHIP 10uF 20% 16V
C521	1-126-394-11	s	ELECT, CHIP 10uF 20% 16V
C522	1-163-038-91	s	CERAMIC, CHIP 0.1uF 25V
C523	1-163-038-91	s	CERAMIC, CHIP 0.1uF 25V
C524	1-163-038-91	s	CERAMIC, CHIP 0.1uF 25V
C525	1-163-235-11	s	CERAMIC, CHIP 22pF 5% 50V
C601	1-163-259-91	s	CERAMIC, CHIP 220pF 5% 50V
C602	1-163-259-91	s	CERAMIC, CHIP 220pF 5% 50V
C603	1-163-251-11	s	CERAMIC, CHIP 100pF 5% 50V
C604	1-163-251-11	s	CERAMIC, CHIP 100pF 5% 50V
C605	1-163-139-00	s	CERAMIC, CHIP 820pF 5% 50V
C606	1-163-251-11	s	CERAMIC, CHIP 100pF 5% 50V
C607	1-126-396-11	s	ELECT, CHIP 47uF 20% 16V
C608	1-163-251-11	s	CERAMIC, CHIP 100pF 5% 50V
C609	1-126-400-11	s	ELECT, CHIP 22uF 20% 35V
C610	1-126-400-11	s	ELECT, CHIP 22uF 20% 35V
C611	1-163-235-11	s	CERAMIC, CHIP 22pF 5% 50V
C612	1-163-235-11	s	CERAMIC, CHIP 22pF 5% 50V
C613	1-126-400-11	s	ELECT, CHIP 22uF 20% 35V
C614	1-163-251-11	s	CERAMIC, CHIP 100pF 5% 50V
C615	1-163-251-11	s	CERAMIC, CHIP 100pF 5% 50V
C617	1-126-400-11	s	ELECT, CHIP 22uF 20% 35V
C619	1-163-275-11	s	CERAMIC, CHIP 0.001uF 5% 50V
C620	1-126-394-11	s	ELECT, CHIP 10uF 20% 16V
C621	1-126-394-11	s	ELECT, CHIP 10uF 20% 16V
C622	1-163-038-91	s	CERAMIC, CHIP 0.1uF 25V
C623	1-163-038-91	s	CERAMIC, CHIP 0.1uF 25V
C624	1-163-038-91	s	CERAMIC, CHIP 0.1uF 25V
C625	1-163-235-11	s	CERAMIC, CHIP 22pF 5% 50V
C701	1-163-259-91	s	CERAMIC, CHIP 220pF 5% 50V
C702	1-163-259-91	s	CERAMIC, CHIP 220pF 5% 50V
C703	1-163-251-11	s	CERAMIC, CHIP 100pF 5% 50V
C704	1-163-251-11	s	CERAMIC, CHIP 100pF 5% 50V
C705	1-163-139-00	s	CERAMIC, CHIP 820pF 5% 50V
C706	1-163-251-11	s	CERAMIC, CHIP 100pF 5% 50V
C707	1-126-396-11	s	ELECT, CHIP 47uF 20% 16V
C708	1-163-251-11	s	CERAMIC, CHIP 100pF 5% 50V
C709	1-126-400-11	s	ELECT, CHIP 22uF 20% 35V
C710	1-126-400-11	s	ELECT, CHIP 22uF 20% 35V
C711	1-163-235-11	s	CERAMIC, CHIP 22pF 5% 50V
C712	1-163-235-11	s	CERAMIC, CHIP 22pF 5% 50V
C713	1-126-400-11	s	ELECT, CHIP 22uF 20% 35V
C714	1-163-251-11	s	CERAMIC, CHIP 100pF 5% 50V
C715	1-163-251-11	s	CERAMIC, CHIP 100pF 5% 50V
C716	1-126-400-11	s	ELECT, CHIP 22uF 20% 35V
C719	1-163-275-11	s	CERAMIC, CHIP 0.001uF 5% 50V
C720	1-126-394-11	s	ELECT, CHIP 10uF 20% 16V
C721	1-126-394-11	s	ELECT, CHIP 10uF 20% 16V
C722	1-163-038-91	s	CERAMIC, CHIP 0.1uF 25V
C723	1-163-038-91	s	CERAMIC, CHIP 0.1uF 25V
C724	1-163-038-91	s	CERAMIC, CHIP 0.1uF 25V
C725	1-163-235-11	s	CERAMIC, CHIP 22pF 5% 50V
D151	8-719-027-95	s	DIODE HSM88WK
D152	8-719-041-39	s	DIODE KV1470

(DV-17 BOARD(For PAL); Suffix -13, 14)

Ref. No. or Q'ty	Part No.	SP	Description
D301	8-719-041-39	s	DIODE KV1470
D302	8-719-041-39	s	DIODE KV1470
D401	8-719-801-48	s	DIODE 1SS193
D402	8-719-820-41	s	DIODE 1SS302
D403	8-719-820-41	s	DIODE 1SS302
D501	8-719-801-48	s	DIODE 1SS193
D502	8-719-820-41	s	DIODE 1SS302
D503	8-719-820-41	s	DIODE 1SS302
D801	8-719-801-48	s	DIODE 1SS193
D803	8-719-820-41	s	DIODE 1SS302
D805	8-719-820-41	s	DIODE 1SS302
D808	8-719-801-48	s	DIODE 1SS193
D810	8-719-820-41	s	DIODE 1SS302
D812	8-719-820-41	s	DIODE 1SS302
FB101	1-233-674-21	s	FILTER BLOCK, NOISE, CHIP
FB102	1-233-674-21	s	FILTER BLOCK, NOISE, CHIP
FL201	1-233-314-11	s	FILTER, NOISE, CHIP
FL202	1-233-314-11	s	FILTER, NOISE, CHIP
IC10	8-759-009-07	s	IC MC14053BF
IC11	8-759-009-06	s	IC MC14052BF
IC12	8-759-702-02	s	IC NJM062M
IC13	8-759-157-17	s	IC PQ05SZ1U
IC14	8-759-172-41	s	IC L78M09T-TL
IC15	8-759-068-03	s	IC NJM79L09UA
IC101	8-759-337-30	s	IC UPD482445LGW-B10-E2
IC102	8-759-385-90	s	IC CXD2187AR
IC103	8-759-524-28	s	IC TC74VHC245FT(EL)
IC104	8-759-524-28	s	IC TC74VHC245FT(EL)
IC105	8-759-167-20	s	IC UPD42280GU-30
IC106	8-759-167-20	s	IC UPD42280GU-30
IC107	8-759-186-77	s	IC TC74VHC541F
IC108	8-759-186-77	s	IC TC74VHC541F
IC121	8-759-328-28	s	IC ZA4024
IC122	8-759-426-26	s	IC CXD8608R
IC123	8-759-328-28	s	IC ZA4024
IC124	8-752-378-68	s	IC CXD3101R
IC125	8-759-327-31	s	IC CXD2183R
IC151	8-759-186-77	s	IC TC74VHC541F
IC152	8-752-375-05	s	IC CXD2191R-T6
IC153	8-759-186-63	s	IC TC74VHC245F(EL)
IC201	8-759-457-61	s	IC CXD8628BR
IC207	8-759-081-48	s	IC TC74VHC08F
IC209	8-759-186-51	s	IC TC74VHC157FS(EL)
IC211	8-759-186-51	s	IC TC74VHC157FS(EL)
IC212	8-759-186-63	s	IC TC74VHC245F(EL)
IC214	8-759-186-63	s	IC TC74VHC245F(EL)
IC215	8-759-271-86	s	IC TC7SH04FU
IC252	8-759-337-74	s	IC HM62V256LT8Z
IC253	8-759-337-74	s	IC HM62V256LT8Z
IC254	8-759-483-02	s	IC CXD8713Q
IC301	8-752-374-96	s	IC CXD2190R-T6
IC302	8-752-374-96	s	IC CXD2190R-T6
IC303	8-759-337-74	s	IC HM62V256LT8Z
IC304	8-759-337-74	s	IC HM62V256LT8Z
IC305	8-759-523-78	s	IC TC74VHC00FT(EL)
IC308	8-759-362-16	s	IC CXD2913AQ
IC309	8-759-362-16	s	IC CXD2913AQ
IC310	8-759-702-02	s	IC NJM062M

(DV-17 BOARD(For PAL); Suffix -13, 14)

Ref. No. or Q'ty	Part No.	SP	Description
IC311	8-759-702-02	s	IC NJM062M
IC313	8-759-523-95	s	IC TC74VHC74FT(EL)
IC314	8-759-271-86	s	IC TC7SH04FU
IC315	8-759-524-09	s	IC TC74VHC153FT(EL)
IC351	8-759-272-21	s	IC TC74VHCT541F
IC352	8-759-523-43	s	IC TC74ACT157FT(EL)
IC353	8-752-352-30	s	IC CXD2705AQ
IC354	8-752-352-30	s	IC CXD2705AQ
IC355	8-759-358-23	s	IC NN514256J-45-T
IC356	8-759-358-23	s	IC NN514256J-45-T
IC357	8-759-326-71	s	IC CXD8517Q
IC358	8-759-326-71	s	IC CXD8517Q
IC359	8-759-523-78	s	IC TC74VHC00FT(EL)
IC360	8-759-523-95	s	IC TC74VHC74FT(EL)
IC361	8-759-523-95	s	IC TC74VHC74FT(EL)
IC363	8-759-524-19	s	IC TC74VHC164FT(EL)
IC364	8-759-524-19	s	IC TC74VHC164FT(EL)
IC365	8-759-523-79	s	IC TC74VHC02FT(EL)
IC381	8-759-173-51	s	IC SM5872AS-ET
IC382	8-759-173-51	s	IC SM5872AS-ET
IC401	8-759-745-64	s	IC NJM4560M
IC402	8-759-745-64	s	IC NJM4560M
IC403	8-759-745-64	s	IC NJM4560M
IC404	8-759-745-64	s	IC NJM4560M
IC405	8-759-521-14	s	IC NJM5532S-D
IC501	8-759-745-64	s	IC NJM4560M
IC503	8-759-745-64	s	IC NJM4560M
IC504	8-759-745-64	s	IC NJM4560M
IC505	8-759-521-14	s	IC NJM5532S-D
IC601	8-759-745-64	s	IC NJM4560M
IC602	8-759-702-02	s	IC NJM062M
IC603	8-759-702-02	s	IC NJM062M
IC604	8-759-702-02	s	IC NJM062M
IC605	8-759-521-14	s	IC NJM5532S-D
IC701	8-759-745-64	s	IC NJM4560M
IC703	8-759-702-02	s	IC NJM062M
IC704	8-759-702-02	s	IC NJM062M
IC705	8-759-521-14	s	IC NJM5532S-D
L11	1-412-364-11	s	FILTER, NOISE, CHIP
L101	1-410-740-31	s	INDUCTOR, CHIP 0.82uH
L103	1-410-740-31	s	INDUCTOR, CHIP 0.82uH
L104	1-410-740-31	s	INDUCTOR, CHIP 0.82uH
L122	1-410-740-31	s	INDUCTOR, CHIP 0.82uH
L151	1-410-381-11	s	INDUCTOR, CHIP 10uH
L153	1-410-381-11	s	INDUCTOR, CHIP 10uH
L154	1-410-740-31	s	INDUCTOR, CHIP 0.82uH
L201	1-410-740-31	s	INDUCTOR, CHIP 0.82uH
L203	1-410-740-31	s	INDUCTOR, CHIP 0.82uH
L251	1-410-740-31	s	INDUCTOR, CHIP 0.82uH
L252	1-410-740-31	s	INDUCTOR, CHIP 0.82uH
L301	1-410-740-31	s	INDUCTOR, CHIP 0.82uH
L303	1-410-381-11	s	INDUCTOR, CHIP 10uH
L304	1-410-381-11	s	INDUCTOR, CHIP 10uH
L307	1-410-381-11	s	INDUCTOR, CHIP 10uH
L308	1-410-381-11	s	INDUCTOR, CHIP 10uH
L311	1-410-381-11	s	INDUCTOR, CHIP 10uH
L351	1-410-740-31	s	INDUCTOR, CHIP 0.82uH
L352	1-410-381-11	s	INDUCTOR, CHIP 10uH

(DV-17 BOARD(For PAL); Suffix -13, 14)

Ref. No. or Q'ty	Part No.	SP	Description
L354	1-410-381-11	s	INDUCTOR, CHIP 10uH
L355	1-410-381-11	s	INDUCTOR, CHIP 10uH
L356	1-410-740-31	s	INDUCTOR, CHIP 0.82uH
L357	1-410-381-11	s	INDUCTOR, CHIP 10uH
L381	1-410-381-11	s	INDUCTOR, CHIP 10uH
L382	1-410-381-11	s	INDUCTOR, CHIP 10uH
L383	1-410-381-11	s	INDUCTOR, CHIP 10uH
L384	1-410-381-11	s	INDUCTOR, CHIP 10uH
LV301	1-411-984-11	s	COIL, VAR, CHIP
LV302	1-411-984-11	s	COIL, VAR, CHIP
PS10	⚠ 1-576-124-11	s	LINK, IC, CHIP 1A
PS11	⚠ 1-576-124-11	s	LINK, IC, CHIP 1A
PS12	⚠ 1-576-124-11	s	LINK, IC, CHIP 1A
PS13	⚠ 1-576-124-11	s	LINK, IC, CHIP 1A
PS14	⚠ 1-576-124-11	s	LINK, IC, CHIP 1A
PS15	⚠ 1-533-282-21	s	LINK, IC, CHIP 2A
PS16	⚠ 1-576-124-11	s	LINK, IC, CHIP 1A
PS17	⚠ 1-576-124-11	s	LINK, IC, CHIP 1A
Q10	1-801-806-11	s	TRANSISTOR DTC144EKA-T146
Q11	1-801-806-11	s	TRANSISTOR DTC144EKA-T146
Q12	1-801-806-11	s	TRANSISTOR DTC144EKA-T146
Q13	8-729-027-38	s	TRANSISTOR DTA144EKA-T146
Q14	8-729-117-32	s	TRANSISTOR 2SC4177
Q15	1-801-806-11	s	TRANSISTOR DTC144EKA-T146
Q16	8-729-202-38	s	TRANSISTOR 2SC3326N
Q17	8-729-202-38	s	TRANSISTOR 2SC3326N
Q18	8-729-202-38	s	TRANSISTOR 2SC3326N
Q19	8-729-027-38	s	TRANSISTOR DTA144EKA-T146
Q251	1-801-806-11	s	TRANSISTOR DTC144EKA-T146
Q381	1-801-806-11	s	TRANSISTOR DTC144EKA-T146
Q382	1-801-806-11	s	TRANSISTOR DTC144EKA-T146
Q383	1-801-806-11	s	TRANSISTOR DTC144EKA-T146
Q384	1-801-806-11	s	TRANSISTOR DTC144EKA-T146
Q385	1-801-806-11	s	TRANSISTOR DTC144EKA-T146
Q386	8-729-027-38	s	TRANSISTOR DTA144EKA-T146
Q387	8-729-027-38	s	TRANSISTOR DTA144EKA-T146
Q388	8-729-027-38	s	TRANSISTOR DTA144EKA-T146
Q389	8-729-027-38	s	TRANSISTOR DTA144EKA-T146
Q390	8-729-027-38	s	TRANSISTOR DTA144EKA-T146
Q401	8-729-202-38	s	TRANSISTOR 2SC3326N
Q402	8-729-202-38	s	TRANSISTOR 2SC3326N
Q403	8-729-202-38	s	TRANSISTOR 2SC3326N
Q404	8-729-202-38	s	TRANSISTOR 2SC3326N
Q405	8-729-202-38	s	TRANSISTOR 2SC3326N
Q501	8-729-202-38	s	TRANSISTOR 2SC3326N
Q502	8-729-202-38	s	TRANSISTOR 2SC3326N
Q503	8-729-202-38	s	TRANSISTOR 2SC3326N
Q504	8-729-202-38	s	TRANSISTOR 2SC3326N
Q505	8-729-202-38	s	TRANSISTOR 2SC3326N
Q601	8-729-202-38	s	TRANSISTOR 2SC3326N
Q602	8-729-202-38	s	TRANSISTOR 2SC3326N
Q603	8-729-202-38	s	TRANSISTOR 2SC3326N
Q604	8-729-202-38	s	TRANSISTOR 2SC3326N
Q605	8-729-202-38	s	TRANSISTOR 2SC3326N
Q701	8-729-202-38	s	TRANSISTOR 2SC3326N
Q702	8-729-202-38	s	TRANSISTOR 2SC3326N
Q703	8-729-202-38	s	TRANSISTOR 2SC3326N
Q704	8-729-202-38	s	TRANSISTOR 2SC3326N

(DV-17 BOARD(For PAL); Suffix -13, 14)

Ref. No. or Q'ty	Part No.	SP	Description
Q705	8-729-202-38	s	TRANSISTOR 2SC3326N
R10	1-216-073-00	s	METAL, CHIP 10k 5% 1/10W
R11	1-216-073-00	s	METAL, CHIP 10k 5% 1/10W
R12	1-216-073-00	s	METAL, CHIP 10k 5% 1/10W
R13	1-216-057-00	s	METAL, CHIP 2.2k 5% 1/10W
R14	1-216-057-00	s	METAL, CHIP 2.2k 5% 1/10W
R15	1-216-025-91	s	METAL, CHIP 100 5% 1/10W
R16	1-216-081-00	s	METAL, CHIP 22k 5% 1/10W
R17	1-216-081-00	s	METAL, CHIP 22k 5% 1/10W
R18	1-216-025-91	s	METAL, CHIP 100 5% 1/10W
R20	1-216-057-00	s	METAL, CHIP 2.2k 5% 1/10W
R21	1-216-025-91	s	METAL, CHIP 100 5% 1/10W
R22	1-216-073-00	s	METAL, CHIP 10k 5% 1/10W
R23	1-216-073-00	s	METAL, CHIP 10k 5% 1/10W
R24	1-216-073-00	s	METAL, CHIP 10k 5% 1/10W
R25	1-216-073-00	s	METAL, CHIP 10k 5% 1/10W
R26	1-216-073-00	s	METAL, CHIP 10k 5% 1/10W
R27	1-216-073-00	s	METAL, CHIP 10k 5% 1/10W
R28	1-216-073-00	s	METAL, CHIP 10k 5% 1/10W
R29	1-216-073-00	s	METAL, CHIP 10k 5% 1/10W
R30	1-216-073-00	s	METAL, CHIP 10k 5% 1/10W
R31	1-216-073-00	s	METAL, CHIP 10k 5% 1/10W
R103	1-216-089-91	s	METAL, CHIP 47k 5% 1/10W
R104	1-216-089-91	s	METAL, CHIP 47k 5% 1/10W
R105	1-216-089-91	s	METAL, CHIP 47k 5% 1/10W
R106	1-216-089-91	s	METAL, CHIP 47k 5% 1/10W
R109	1-216-089-91	s	METAL, CHIP 47k 5% 1/10W
R110	1-216-025-91	s	METAL, CHIP 100 5% 1/10W
R151	1-216-025-91	s	METAL, CHIP 100 5% 1/10W
R152	1-216-295-91	s	RES, CHIP 0
R154	1-216-025-91	s	METAL, CHIP 100 5% 1/10W
R155	1-216-025-91	s	METAL, CHIP 100 5% 1/10W
R157	1-216-129-00	s	METAL, CHIP 2.2M 5% 1/10W
R158	1-216-041-00	s	METAL, CHIP 470 5% 1/10W
R159	1-216-073-00	s	METAL, CHIP 10k 5% 1/10W
R160	1-216-073-00	s	METAL, CHIP 10k 5% 1/10W
R162	1-216-065-91	s	METAL, CHIP 4.7k 5% 1/10W
R163	1-216-025-91	s	METAL, CHIP 100 5% 1/10W
R167	1-216-025-91	s	METAL, CHIP 100 5% 1/10W
R168	1-216-025-91	s	METAL, CHIP 100 5% 1/10W
R170	1-216-025-91	s	METAL, CHIP 100 5% 1/10W
R173	1-216-295-91	s	RES, CHIP 0
R205	1-216-025-91	s	METAL, CHIP 100 5% 1/10W
R206	1-216-295-91	s	RES, CHIP 0
R207	1-216-295-91	s	RES, CHIP 0
R208	1-216-295-91	s	RES, CHIP 0
R209	1-216-295-91	s	RES, CHIP 0
R210	1-216-295-91	s	RES, CHIP 0
R213	1-216-025-91	s	METAL, CHIP 100 5% 1/10W
R214	1-216-025-91	s	METAL, CHIP 100 5% 1/10W
R251	1-216-025-91	s	METAL, CHIP 100 5% 1/10W
R254	1-216-025-91	s	METAL, CHIP 100 5% 1/10W
R256	1-216-295-91	s	RES, CHIP 0
R274	1-216-295-91	s	RES, CHIP 0
R275	1-216-295-91	s	RES, CHIP 0
R276	1-216-295-91	s	RES, CHIP 0
R277	1-216-295-91	s	RES, CHIP 0
R278	1-216-295-91	s	RES, CHIP 0

(DV-17 BOARD(For PAL); Suffix -13, 14)

Ref. No. or Q'ty	Part No.	SP	Description
R301	1-216-295-91	s	RES, CHIP 0
R303	1-216-295-91	s	RES, CHIP 0
R310	1-216-097-91	s	METAL, CHIP 100k 5% 1/10W
R311	1-216-089-91	s	METAL, CHIP 47k 5% 1/10W
R312	1-216-097-91	s	METAL, CHIP 100k 5% 1/10W
R313	1-216-091-00	s	METAL, CHIP 56k 5% 1/10W
R314	1-216-089-91	s	METAL, CHIP 47k 5% 1/10W
R315	1-216-049-91	s	METAL, CHIP 1k 5% 1/10W
R316	1-216-089-91	s	METAL, CHIP 47k 5% 1/10W
R317	1-216-073-00	s	METAL, CHIP 10k 5% 1/10W
R318	1-216-089-91	s	METAL, CHIP 47k 5% 1/10W
R319	1-216-081-00	s	METAL, CHIP 22k 5% 1/10W
R320	1-216-089-91	s	METAL, CHIP 47k 5% 1/10W
R321	1-216-089-91	s	METAL, CHIP 47k 5% 1/10W
R322	1-216-089-91	s	METAL, CHIP 47k 5% 1/10W
R323	1-216-089-91	s	METAL, CHIP 47k 5% 1/10W
R324	1-216-089-91	s	METAL, CHIP 47k 5% 1/10W
R325	1-216-089-91	s	METAL, CHIP 47k 5% 1/10W
R326	1-216-089-91	s	METAL, CHIP 47k 5% 1/10W
R327	1-216-089-91	s	METAL, CHIP 47k 5% 1/10W
R328	1-216-073-00	s	METAL, CHIP 10k 5% 1/10W
R329	1-216-295-91	s	RES, CHIP 0
R330	1-216-025-91	s	METAL, CHIP 100 5% 1/10W
R331	1-216-089-91	s	METAL, CHIP 47k 5% 1/10W
R355	1-216-049-91	s	METAL, CHIP 1k 5% 1/10W
R381	1-216-049-91	s	METAL, CHIP 1k 5% 1/10W
R382	1-216-081-00	s	METAL, CHIP 22k 5% 1/10W
R383	1-216-081-00	s	METAL, CHIP 22k 5% 1/10W
R384	1-216-081-00	s	METAL, CHIP 22k 5% 1/10W
R385	1-216-081-00	s	METAL, CHIP 22k 5% 1/10W
R386	1-216-073-00	s	METAL, CHIP 10k 5% 1/10W
R401	1-208-806-11	s	METAL, CHIP 10k 0.5% 1/10W
R402	1-208-806-11	s	METAL, CHIP 10k 0.5% 1/10W
R403	1-208-806-11	s	METAL, CHIP 10k 0.5% 1/10W
R404	1-208-806-11	s	METAL, CHIP 10k 0.5% 1/10W
R405	1-208-814-11	s	METAL, CHIP 22k 0.5% 1/10W
R406	1-208-814-11	s	METAL, CHIP 22k 0.5% 1/10W
R407	1-208-808-11	s	METAL, CHIP 12k 0.5% 1/10W
R408	1-208-808-11	s	METAL, CHIP 12k 0.5% 1/10W
R409	1-208-814-11	s	METAL, CHIP 22k 0.5% 1/10W
R410	1-216-073-00	s	METAL, CHIP 10k 5% 1/10W
R411	1-208-814-11	s	METAL, CHIP 22k 0.5% 1/10W
R412	1-208-798-11	s	METAL, CHIP 4.7k 0.5% 1/10W
R413	1-208-805-11	s	METAL, CHIP 9.1k 0.5% 1/10W
R414	1-208-798-11	s	METAL, CHIP 4.7k 0.5% 1/10W
R415	1-216-073-00	s	METAL, CHIP 10k 5% 1/10W
R416	1-208-806-11	s	METAL, CHIP 10k 0.5% 1/10W
R417	1-216-073-00	s	METAL, CHIP 10k 5% 1/10W
R418	1-208-804-11	s	METAL, CHIP 8.2k 0.5% 1/10W
R419	1-208-805-11	s	METAL, CHIP 9.1k 0.5% 1/10W
R420	1-208-798-11	s	METAL, CHIP 4.7k 0.5% 1/10W
R421	1-216-073-00	s	METAL, CHIP 10k 5% 1/10W
R422	1-208-808-11	s	METAL, CHIP 12k 0.5% 1/10W
R423	1-208-798-11	s	METAL, CHIP 4.7k 0.5% 1/10W
R424	1-208-806-11	s	METAL, CHIP 10k 0.5% 1/10W
R425	1-208-806-11	s	METAL, CHIP 10k 0.5% 1/10W
R426	1-208-798-11	s	METAL, CHIP 4.7k 0.5% 1/10W
R427	1-208-798-11	s	METAL, CHIP 4.7k 0.5% 1/10W
R428	1-208-798-11	s	METAL, CHIP 4.7k 0.5% 1/10W

(DV-17 BOARD(For PAL); Suffix -13, 14)

Ref. No. or Q'ty	Part No.	SP	Description
R429	1-208-798-11	s	METAL, CHIP 4.7k 0.5% 1/10W
R430	1-208-806-11	s	METAL, CHIP 10k 0.5% 1/10W
R431	1-208-806-11	s	METAL, CHIP 10k 0.5% 1/10W
R432	1-216-049-91	s	METAL, CHIP 1k 5% 1/10W
R433	1-208-806-11	s	METAL, CHIP 10k 0.5% 1/10W
R435	1-216-049-91	s	METAL, CHIP 1k 5% 1/10W
R437	1-208-750-11	s	METAL, CHIP 47 0.5% 1/10W
R438	1-216-097-91	s	METAL, CHIP 100k 5% 1/10W
R439	1-216-097-91	s	METAL, CHIP 100k 5% 1/10W
R440	1-208-806-11	s	METAL, CHIP 10k 0.5% 1/10W
R441	1-208-750-11	s	METAL, CHIP 47 0.5% 1/10W
R442	1-220-242-11	s	METAL, CHIP 22 5% 1/4W
R445	1-220-242-11	s	METAL, CHIP 22 5% 1/4W
R448	1-216-037-00	s	METAL, CHIP 330 5% 1/10W
R449	1-216-073-00	s	METAL, CHIP 10k 5% 1/10W
R501	1-208-806-11	s	METAL, CHIP 10k 0.5% 1/10W
R502	1-208-806-11	s	METAL, CHIP 10k 0.5% 1/10W
R503	1-208-806-11	s	METAL, CHIP 10k 0.5% 1/10W
R504	1-208-806-11	s	METAL, CHIP 10k 0.5% 1/10W
R505	1-208-814-11	s	METAL, CHIP 22k 0.5% 1/10W
R506	1-208-814-11	s	METAL, CHIP 22k 0.5% 1/10W
R507	1-208-808-11	s	METAL, CHIP 12k 0.5% 1/10W
R508	1-208-808-11	s	METAL, CHIP 12k 0.5% 1/10W
R509	1-208-814-11	s	METAL, CHIP 22k 0.5% 1/10W
R510	1-216-073-00	s	METAL, CHIP 10k 5% 1/10W
R511	1-208-814-11	s	METAL, CHIP 22k 0.5% 1/10W
R512	1-208-798-11	s	METAL, CHIP 4.7k 0.5% 1/10W
R513	1-208-805-11	s	METAL, CHIP 9.1k 0.5% 1/10W
R514	1-208-798-11	s	METAL, CHIP 4.7k 0.5% 1/10W
R515	1-216-073-00	s	METAL, CHIP 10k 5% 1/10W
R516	1-208-806-11	s	METAL, CHIP 10k 0.5% 1/10W
R517	1-216-073-00	s	METAL, CHIP 10k 5% 1/10W
R518	1-208-804-11	s	METAL, CHIP 8.2k 0.5% 1/10W
R519	1-208-805-11	s	METAL, CHIP 9.1k 0.5% 1/10W
R520	1-208-798-11	s	METAL, CHIP 4.7k 0.5% 1/10W
R521	1-216-073-00	s	METAL, CHIP 10k 5% 1/10W
R522	1-208-808-11	s	METAL, CHIP 12k 0.5% 1/10W
R523	1-208-798-11	s	METAL, CHIP 4.7k 0.5% 1/10W
R524	1-208-806-11	s	METAL, CHIP 10k 0.5% 1/10W
R525	1-208-806-11	s	METAL, CHIP 10k 0.5% 1/10W
R526	1-208-798-11	s	METAL, CHIP 4.7k 0.5% 1/10W
R527	1-208-798-11	s	METAL, CHIP 4.7k 0.5% 1/10W
R528	1-208-798-11	s	METAL, CHIP 4.7k 0.5% 1/10W
R529	1-208-798-11	s	METAL, CHIP 4.7k 0.5% 1/10W
R530	1-208-806-11	s	METAL, CHIP 10k 0.5% 1/10W
R531	1-208-806-11	s	METAL, CHIP 10k 0.5% 1/10W
R532	1-216-049-91	s	METAL, CHIP 1k 5% 1/10W
R533	1-208-806-11	s	METAL, CHIP 10k 0.5% 1/10W
R535	1-216-049-91	s	METAL, CHIP 1k 5% 1/10W
R537	1-208-750-11	s	METAL, CHIP 47 0.5% 1/10W
R538	1-216-097-91	s	METAL, CHIP 100k 5% 1/10W
R539	1-216-097-91	s	METAL, CHIP 100k 5% 1/10W
R540	1-208-806-11	s	METAL, CHIP 10k 0.5% 1/10W
R541	1-208-750-11	s	METAL, CHIP 47 0.5% 1/10W
R544	1-220-242-11	s	METAL, CHIP 22 5% 1/4W
R547	1-220-242-11	s	METAL, CHIP 22 5% 1/4W
R548	1-216-037-00	s	METAL, CHIP 330 5% 1/10W
R549	1-216-073-00	s	METAL, CHIP 10k 5% 1/10W
R601	1-208-806-11	s	METAL, CHIP 10k 0.5% 1/10W

(DV-17 BOARD(For PAL); Suffix -13, 14)

Ref. No. or Q'ty	Part No.	SP	Description
R602	1-208-806-11	s	METAL, CHIP 10k 0.5% 1/10W
R603	1-208-806-11	s	METAL, CHIP 10k 0.5% 1/10W
R604	1-208-806-11	s	METAL, CHIP 10k 0.5% 1/10W
R605	1-208-814-11	s	METAL, CHIP 22k 0.5% 1/10W
R606	1-208-814-11	s	METAL, CHIP 22k 0.5% 1/10W
R607	1-208-808-11	s	METAL, CHIP 12k 0.5% 1/10W
R608	1-208-808-11	s	METAL, CHIP 12k 0.5% 1/10W
R609	1-208-814-11	s	METAL, CHIP 22k 0.5% 1/10W
R610	1-216-073-00	s	METAL, CHIP 10k 5% 1/10W
R611	1-208-814-11	s	METAL, CHIP 22k 0.5% 1/10W
R612	1-208-798-11	s	METAL, CHIP 4.7k 0.5% 1/10W
R613	1-208-805-11	s	METAL, CHIP 9.1k 0.5% 1/10W
R614	1-208-798-11	s	METAL, CHIP 4.7k 0.5% 1/10W
R615	1-216-073-00	s	METAL, CHIP 10k 5% 1/10W
R616	1-208-806-11	s	METAL, CHIP 10k 0.5% 1/10W
R617	1-216-073-00	s	METAL, CHIP 10k 5% 1/10W
R618	1-208-804-11	s	METAL, CHIP 8.2k 0.5% 1/10W
R619	1-208-805-11	s	METAL, CHIP 9.1k 0.5% 1/10W
R620	1-208-798-11	s	METAL, CHIP 4.7k 0.5% 1/10W
R621	1-216-073-00	s	METAL, CHIP 10k 5% 1/10W
R622	1-208-808-11	s	METAL, CHIP 12k 0.5% 1/10W
R623	1-208-798-11	s	METAL, CHIP 4.7k 0.5% 1/10W
R624	1-208-806-11	s	METAL, CHIP 10k 0.5% 1/10W
R625	1-208-806-11	s	METAL, CHIP 10k 0.5% 1/10W
R626	1-208-798-11	s	METAL, CHIP 4.7k 0.5% 1/10W
R627	1-208-798-11	s	METAL, CHIP 4.7k 0.5% 1/10W
R628	1-208-798-11	s	METAL, CHIP 4.7k 0.5% 1/10W
R629	1-208-798-11	s	METAL, CHIP 4.7k 0.5% 1/10W
R630	1-208-806-11	s	METAL, CHIP 10k 0.5% 1/10W
R631	1-208-806-11	s	METAL, CHIP 10k 0.5% 1/10W
R632	1-216-049-91	s	METAL, CHIP 1k 5% 1/10W
R633	1-208-806-11	s	METAL, CHIP 10k 0.5% 1/10W
R635	1-216-049-91	s	METAL, CHIP 1k 5% 1/10W
R637	1-208-750-11	s	METAL, CHIP 47 0.5% 1/10W
R638	1-216-097-91	s	METAL, CHIP 100k 5% 1/10W
R639	1-216-097-91	s	METAL, CHIP 100k 5% 1/10W
R640	1-208-806-11	s	METAL, CHIP 10k 0.5% 1/10W
R641	1-208-750-11	s	METAL, CHIP 47 0.5% 1/10W
R644	1-220-242-11	s	METAL, CHIP 22 5% 1/4W
R645	1-220-242-11	s	METAL, CHIP 22 5% 1/4W
R648	1-216-037-00	s	METAL, CHIP 330 5% 1/10W
R649	1-216-073-00	s	METAL, CHIP 10k 5% 1/10W
R701	1-208-806-11	s	METAL, CHIP 10k 0.5% 1/10W
R702	1-208-806-11	s	METAL, CHIP 10k 0.5% 1/10W
R703	1-208-806-11	s	METAL, CHIP 10k 0.5% 1/10W
R704	1-208-806-11	s	METAL, CHIP 10k 0.5% 1/10W
R705	1-208-814-11	s	METAL, CHIP 22k 0.5% 1/10W
R706	1-208-814-11	s	METAL, CHIP 22k 0.5% 1/10W
R707	1-208-808-11	s	METAL, CHIP 12k 0.5% 1/10W
R708	1-208-808-11	s	METAL, CHIP 12k 0.5% 1/10W
R709	1-208-814-11	s	METAL, CHIP 22k 0.5% 1/10W
R710	1-216-073-00	s	METAL, CHIP 10k 5% 1/10W
R711	1-208-814-11	s	METAL, CHIP 22k 0.5% 1/10W
R712	1-208-798-11	s	METAL, CHIP 4.7k 0.5% 1/10W
R713	1-208-805-11	s	METAL, CHIP 9.1k 0.5% 1/10W
R714	1-208-798-11	s	METAL, CHIP 4.7k 0.5% 1/10W
R715	1-216-073-00	s	METAL, CHIP 10k 5% 1/10W
R716	1-208-806-11	s	METAL, CHIP 10k 0.5% 1/10W
R717	1-216-073-00	s	METAL, CHIP 10k 5% 1/10W

(DV-17 BOARD(For PAL); Suffix -13, 14)

Ref. No. or Q'ty	Part No.	SP	Description
R718	1-208-804-11	s	METAL, CHIP 8.2k 0.5% 1/10W
R719	1-208-805-11	s	METAL, CHIP 9.1k 0.5% 1/10W
R720	1-208-798-11	s	METAL, CHIP 4.7k 0.5% 1/10W
R721	1-216-073-00	s	METAL, CHIP 10k 5% 1/10W
R722	1-208-808-11	s	METAL, CHIP 12k 0.5% 1/10W
R723	1-208-798-11	s	METAL, CHIP 4.7k 0.5% 1/10W
R724	1-208-806-11	s	METAL, CHIP 10k 0.5% 1/10W
R725	1-208-806-11	s	METAL, CHIP 10k 0.5% 1/10W
R726	1-208-798-11	s	METAL, CHIP 4.7k 0.5% 1/10W
R727	1-208-798-11	s	METAL, CHIP 4.7k 0.5% 1/10W
R728	1-208-798-11	s	METAL, CHIP 4.7k 0.5% 1/10W
R729	1-208-798-11	s	METAL, CHIP 4.7k 0.5% 1/10W
R730	1-208-806-11	s	METAL, CHIP 10k 0.5% 1/10W
R731	1-208-806-11	s	METAL, CHIP 10k 0.5% 1/10W
R732	1-216-049-91	s	METAL, CHIP 1k 5% 1/10W
R733	1-208-806-11	s	METAL, CHIP 10k 0.5% 1/10W
R735	1-216-049-91	s	METAL, CHIP 1k 5% 1/10W
R737	1-208-750-11	s	METAL, CHIP 47 0.5% 1/10W
R738	1-216-097-91	s	METAL, CHIP 100k 5% 1/10W
R739	1-216-097-91	s	METAL, CHIP 100k 5% 1/10W
R740	1-208-806-11	s	METAL, CHIP 10k 0.5% 1/10W
R741	1-208-750-11	s	METAL, CHIP 47 0.5% 1/10W
R742	1-220-242-11	s	METAL, CHIP 22 5% 1/4W
R747	1-220-242-11	s	METAL, CHIP 22 5% 1/4W
R748	1-216-037-00	s	METAL, CHIP 330 5% 1/10W
R749	1-216-073-00	s	METAL, CHIP 10k 5% 1/10W
RB101	1-239-998-11	s	RESISTOR BLOCK, CHIP 100 x 4
RB102	1-239-998-11	s	RESISTOR BLOCK, CHIP 100 x 4
RB103	1-239-998-11	s	RESISTOR BLOCK, CHIP 100 x 4
RB104	1-239-998-11	s	RESISTOR BLOCK, CHIP 100 x 4
RB105	1-239-308-11	s	RESISTOR BLOCK, CHIP 47K x 8
RB107	1-239-998-11	s	RESISTOR BLOCK, CHIP 100 x 4
RB108	1-239-998-11	s	RESISTOR BLOCK, CHIP 100 x 4
RB109	1-239-998-11	s	RESISTOR BLOCK, CHIP 100 x 4
RB151	1-239-998-11	s	RESISTOR BLOCK, CHIP 100 x 4
RB153	1-239-998-11	s	RESISTOR BLOCK, CHIP 100 x 4
RB154	1-239-998-11	s	RESISTOR BLOCK, CHIP 100 x 4
RB201	1-239-998-11	s	RESISTOR BLOCK, CHIP 100 x 4
RB202	1-239-998-11	s	RESISTOR BLOCK, CHIP 100 x 4
RB203	1-239-998-11	s	RESISTOR BLOCK, CHIP 100 x 4
RB204	1-239-998-11	s	RESISTOR BLOCK, CHIP 100 x 4
RB205	1-239-998-11	s	RESISTOR BLOCK, CHIP 100 x 4
RB252	1-239-308-11	s	RESISTOR BLOCK, CHIP 47K x 8
RB301	1-239-308-11	s	RESISTOR BLOCK, CHIP 47K x 8
RB302	1-239-998-11	s	RESISTOR BLOCK, CHIP 100 x 4
RB303	1-239-998-11	s	RESISTOR BLOCK, CHIP 100 x 4
RB304	1-239-998-11	s	RESISTOR BLOCK, CHIP 100 x 4
RB305	1-239-998-11	s	RESISTOR BLOCK, CHIP 100 x 4
RB351	1-239-998-11	s	RESISTOR BLOCK, CHIP 100 x 4
RV401	1-241-264-11	s	RES, ADJ, METAL 10k
RV501	1-241-264-11	s	RES, ADJ, METAL 10k
RV601	1-241-264-11	s	RES, ADJ, METAL 10k
RV701	1-241-264-11	s	RES, ADJ, METAL 10k
RY401	1-515-716-11	s	RELAY (TQ2-5V)
RY501	1-515-716-11	s	RELAY (TQ2-5V)
RY601	1-515-716-11	s	RELAY (TQ2-5V)
RY701	1-515-716-11	s	RELAY (TQ2-5V)

DV-17 BOARD(For PAL); Suffix -12

This list corresponds to the board suffix number -12.

Ref. No. or Q'ty	Part No.	SP	Description
1pc	A-8312-964-B	s	MOUNTED CIRCUIT BOARD, DV-17A
1pc	7-621-759-45	s	+PSW, 2.6x6
1pc	3-179-084-01	s	LEVER (R), PRINTED CIRCUIT BOARD
1pc	3-179-085-01	s	LEVER (L), PRINTED CIRCUIT BOARD
C10	1-163-038-91	s	CERAMIC, CHIP 0.1uF 25V
C11	1-163-038-91	s	CERAMIC, CHIP 0.1uF 25V
C12	1-163-038-91	s	CERAMIC, CHIP 0.1uF 25V
C13	1-163-038-91	s	CERAMIC, CHIP 0.1uF 25V
C14	1-163-038-91	s	CERAMIC, CHIP 0.1uF 25V
C15	1-163-038-91	s	CERAMIC, CHIP 0.1uF 25V
C16	1-163-251-11	s	CERAMIC, CHIP 100pF 5% 50V
C17	1-163-251-11	s	CERAMIC, CHIP 100pF 5% 50V
C18	1-126-394-11	s	ELECT, CHIP 10uF 20% 16V
C19	1-126-394-11	s	ELECT, CHIP 10uF 20% 16V
C20	1-126-394-11	s	ELECT, CHIP 10uF 20% 16V
C21	1-126-394-11	s	ELECT, CHIP 10uF 20% 16V
C22	1-163-038-91	s	CERAMIC, CHIP 0.1uF 25V
C23	1-163-038-91	s	CERAMIC, CHIP 0.1uF 25V
C24	1-163-038-91	s	CERAMIC, CHIP 0.1uF 25V
C27	1-163-038-91	s	CERAMIC, CHIP 0.1uF 25V
C28	1-163-038-91	s	CERAMIC, CHIP 0.1uF 25V
C29	1-163-038-91	s	CERAMIC, CHIP 0.1uF 25V
C30	1-126-396-11	s	ELECT, CHIP 47uF 20% 16V
C31	1-126-394-11	s	ELECT, CHIP 10uF 20% 16V
C32	1-126-394-11	s	ELECT, CHIP 10uF 20% 16V
C33	1-126-396-11	s	ELECT, CHIP 47uF 20% 16V
C101	1-163-038-91	s	CERAMIC, CHIP 0.1uF 25V
C102	1-163-038-91	s	CERAMIC, CHIP 0.1uF 25V
C103	1-163-038-91	s	CERAMIC, CHIP 0.1uF 25V
C104	1-163-038-91	s	CERAMIC, CHIP 0.1uF 25V
C105	1-163-038-91	s	CERAMIC, CHIP 0.1uF 25V
C106	1-163-038-91	s	CERAMIC, CHIP 0.1uF 25V
C107	1-163-227-11	s	CERAMIC, CHIP 10pF 5% 50V
C108	1-163-038-91	s	CERAMIC, CHIP 0.1uF 25V
C109	1-163-038-91	s	CERAMIC, CHIP 0.1uF 25V
C110	1-126-394-11	s	ELECT, CHIP 10uF 20% 16V
C111	1-163-038-91	s	CERAMIC, CHIP 0.1uF 25V
C112	1-163-038-91	s	CERAMIC, CHIP 0.1uF 25V
C113	1-163-038-91	s	CERAMIC, CHIP 0.1uF 25V
C114	1-163-038-91	s	CERAMIC, CHIP 0.1uF 25V
C115	1-126-394-11	s	ELECT, CHIP 10uF 20% 16V
C116	1-126-394-11	s	ELECT, CHIP 10uF 20% 16V
C117	1-163-038-91	s	CERAMIC, CHIP 0.1uF 25V
C118	1-163-038-91	s	CERAMIC, CHIP 0.1uF 25V
C119	1-163-038-91	s	CERAMIC, CHIP 0.1uF 25V
C121	1-163-038-91	s	CERAMIC, CHIP 0.1uF 25V
C123	1-163-038-91	s	CERAMIC, CHIP 0.1uF 25V
C124	1-163-038-91	s	CERAMIC, CHIP 0.1uF 25V
C125	1-163-038-91	s	CERAMIC, CHIP 0.1uF 25V
C126	1-163-038-91	s	CERAMIC, CHIP 0.1uF 25V
C127	1-163-038-91	s	CERAMIC, CHIP 0.1uF 25V
C128	1-163-038-91	s	CERAMIC, CHIP 0.1uF 25V
C129	1-126-396-11	s	ELECT, CHIP 47uF 20% 16V
C130	1-163-038-91	s	CERAMIC, CHIP 0.1uF 25V
C132	1-163-038-91	s	CERAMIC, CHIP 0.1uF 25V
C133	1-163-038-91	s	CERAMIC, CHIP 0.1uF 25V

(DV-17 BOARD(For PAL); Suffix -12)

Ref. No. or Q'ty	Part No.	SP	Description
C134	1-163-038-91	s	CERAMIC, CHIP 0.1uF 25V
C135	1-163-038-91	s	CERAMIC, CHIP 0.1uF 25V
C136	1-163-038-91	s	CERAMIC, CHIP 0.1uF 25V
C137	1-163-038-91	s	CERAMIC, CHIP 0.1uF 25V
C138	1-163-038-91	s	CERAMIC, CHIP 0.1uF 25V
C139	1-163-038-91	s	CERAMIC, CHIP 0.1uF 25V
C151	1-163-275-11	s	CERAMIC, CHIP 0.001uF 5% 50V
C153	1-163-038-91	s	CERAMIC, CHIP 0.1uF 25V
C154	1-126-396-11	s	ELECT, CHIP 47uF 20% 16V
C155	1-163-038-91	s	CERAMIC, CHIP 0.1uF 25V
C156	1-163-038-91	s	CERAMIC, CHIP 0.1uF 25V
C157	1-163-038-91	s	CERAMIC, CHIP 0.1uF 25V
C158	1-163-038-91	s	CERAMIC, CHIP 0.1uF 25V
C159	1-163-038-91	s	CERAMIC, CHIP 0.1uF 25V
C160	1-163-038-91	s	CERAMIC, CHIP 0.1uF 25V
C161	1-163-038-91	s	CERAMIC, CHIP 0.1uF 25V
C162	1-163-275-11	s	CERAMIC, CHIP 0.001uF 5% 50V
C163	1-163-275-11	s	CERAMIC, CHIP 0.001uF 5% 50V
C164	1-163-275-11	s	CERAMIC, CHIP 0.001uF 5% 50V
C165	1-104-760-11	s	CERAMIC, CHIP 0.047uF 10% 50V
C166	1-135-179-21	s	TANTALUM, CHIP 2.2uF 10% 16V
C167	1-163-038-91	s	CERAMIC, CHIP 0.1uF 25V
C168	1-163-038-91	s	CERAMIC, CHIP 0.1uF 25V
C169	1-163-038-91	s	CERAMIC, CHIP 0.1uF 25V
C170	1-163-038-91	s	CERAMIC, CHIP 0.1uF 25V
C171	1-163-231-11	s	CERAMIC, CHIP 15pF 5% 50V
C201	1-163-038-91	s	CERAMIC, CHIP 0.1uF 25V
C202	1-126-396-11	s	ELECT, CHIP 47uF 20% 16V
C203	1-163-038-91	s	CERAMIC, CHIP 0.1uF 25V
C204	1-163-038-91	s	CERAMIC, CHIP 0.1uF 25V
C205	1-163-038-91	s	CERAMIC, CHIP 0.1uF 25V
C206	1-163-038-91	s	CERAMIC, CHIP 0.1uF 25V
C214	1-163-038-91	s	CERAMIC, CHIP 0.1uF 25V
C218	1-163-038-91	s	CERAMIC, CHIP 0.1uF 25V
C219	1-163-038-91	s	CERAMIC, CHIP 0.1uF 25V
C220	1-163-038-91	s	CERAMIC, CHIP 0.1uF 25V
C221	1-163-038-91	s	CERAMIC, CHIP 0.1uF 25V
C222	1-163-038-91	s	CERAMIC, CHIP 0.1uF 25V
C226	1-126-396-11	s	ELECT, CHIP 47uF 20% 16V
C251	1-126-394-11	s	ELECT, CHIP 10uF 20% 16V
C252	1-163-038-91	s	CERAMIC, CHIP 0.1uF 25V
C253	1-126-394-11	s	ELECT, CHIP 10uF 20% 16V
C254	1-163-038-91	s	CERAMIC, CHIP 0.1uF 25V
C255	1-163-038-91	s	CERAMIC, CHIP 0.1uF 25V
C256	1-163-038-91	s	CERAMIC, CHIP 0.1uF 25V
C257	1-163-038-91	s	CERAMIC, CHIP 0.1uF 25V
C258	1-163-038-91	s	CERAMIC, CHIP 0.1uF 25V
C259	1-163-038-91	s	CERAMIC, CHIP 0.1uF 25V
C260	1-163-038-91	s	CERAMIC, CHIP 0.1uF 25V
C261	1-163-038-91	s	CERAMIC, CHIP 0.1uF 25V
C262	1-163-038-91	s	CERAMIC, CHIP 0.1uF 25V
C263	1-163-038-91	s	CERAMIC, CHIP 0.1uF 25V
C264	1-163-038-91	s	CERAMIC, CHIP 0.1uF 25V
C265	1-163-038-91	s	CERAMIC, CHIP 0.1uF 25V
C266	1-163-038-91	s	CERAMIC, CHIP 0.1uF 25V
C267	1-163-038-91	s	CERAMIC, CHIP 0.1uF 25V
C268	1-163-038-91	s	CERAMIC, CHIP 0.1uF 25V
C269	1-163-038-91	s	CERAMIC, CHIP 0.1uF 25V
C270	1-163-038-91	s	CERAMIC, CHIP 0.1uF 25V

(DV-17 BOARD(For PAL); Suffix -12)

Ref. No. or Q'ty	Part No.	SP	Description
C272	1-163-038-91	s	CERAMIC, CHIP 0.1uF 25V
C301	1-163-038-91	s	CERAMIC, CHIP 0.1uF 25V
C302	1-163-038-91	s	CERAMIC, CHIP 0.1uF 25V
C303	1-163-038-91	s	CERAMIC, CHIP 0.1uF 25V
C304	1-163-038-91	s	CERAMIC, CHIP 0.1uF 25V
C305	1-163-038-91	s	CERAMIC, CHIP 0.1uF 25V
C306	1-163-038-91	s	CERAMIC, CHIP 0.1uF 25V
C307	1-163-038-91	s	CERAMIC, CHIP 0.1uF 25V
C308	1-163-038-91	s	CERAMIC, CHIP 0.1uF 25V
C309	1-163-038-91	s	CERAMIC, CHIP 0.1uF 25V
C310	1-163-038-91	s	CERAMIC, CHIP 0.1uF 25V
C311	1-163-038-91	s	CERAMIC, CHIP 0.1uF 25V
C312	1-163-038-91	s	CERAMIC, CHIP 0.1uF 25V
C313	1-126-396-11	s	ELECT, CHIP 47uF 20% 16V
C315	1-163-038-91	s	CERAMIC, CHIP 0.1uF 25V
C316	1-163-038-91	s	CERAMIC, CHIP 0.1uF 25V
C317	1-163-038-91	s	CERAMIC, CHIP 0.1uF 25V
C318	1-163-038-91	s	CERAMIC, CHIP 0.1uF 25V
C319	1-163-038-91	s	CERAMIC, CHIP 0.1uF 25V
C320	1-164-346-11	s	CERAMIC, CHIP 1uF 16V
C321	1-164-346-11	s	CERAMIC, CHIP 1uF 16V
C322	1-163-038-91	s	CERAMIC, CHIP 0.1uF 25V
C323	1-163-038-91	s	CERAMIC, CHIP 0.1uF 25V
C324	1-163-038-91	s	CERAMIC, CHIP 0.1uF 25V
C325	1-163-038-91	s	CERAMIC, CHIP 0.1uF 25V
C326	1-163-038-91	s	CERAMIC, CHIP 0.1uF 25V
C327	1-163-038-91	s	CERAMIC, CHIP 0.1uF 25V
C328	1-163-038-91	s	CERAMIC, CHIP 0.1uF 25V
C329	1-163-038-91	s	CERAMIC, CHIP 0.1uF 25V
C330	1-163-038-91	s	CERAMIC, CHIP 0.1uF 25V
C331	1-163-251-11	s	CERAMIC, CHIP 100pF 5% 50V
C332	1-163-038-91	s	CERAMIC, CHIP 0.1uF 25V
C333	1-163-251-11	s	CERAMIC, CHIP 100pF 5% 50V
C334	1-163-038-91	s	CERAMIC, CHIP 0.1uF 25V
C335	1-163-038-91	s	CERAMIC, CHIP 0.1uF 25V
C336	1-163-275-11	s	CERAMIC, CHIP 0.001uF 5% 50V
C337	1-163-275-11	s	CERAMIC, CHIP 0.001uF 5% 50V
C338	1-163-275-11	s	CERAMIC, CHIP 0.001uF 5% 50V
C339	1-163-275-11	s	CERAMIC, CHIP 0.001uF 5% 50V
C340	1-163-038-91	s	CERAMIC, CHIP 0.1uF 25V
C341	1-163-038-91	s	CERAMIC, CHIP 0.1uF 25V
C342	1-163-038-91	s	CERAMIC, CHIP 0.1uF 25V
C343	1-163-038-91	s	CERAMIC, CHIP 0.1uF 25V
C344	1-163-038-91	s	CERAMIC, CHIP 0.1uF 25V
C345	1-163-038-91	s	CERAMIC, CHIP 0.1uF 25V
C346	1-163-038-91	s	CERAMIC, CHIP 0.1uF 25V
C347	1-163-038-91	s	CERAMIC, CHIP 0.1uF 25V
C348	1-163-038-91	s	CERAMIC, CHIP 0.1uF 25V
C351	1-163-038-91	s	CERAMIC, CHIP 0.1uF 25V
C353	1-163-038-91	s	CERAMIC, CHIP 0.1uF 25V
C354	1-163-038-91	s	CERAMIC, CHIP 0.1uF 25V
C355	1-163-038-91	s	CERAMIC, CHIP 0.1uF 25V
C356	1-163-038-91	s	CERAMIC, CHIP 0.1uF 25V
C357	1-163-038-91	s	CERAMIC, CHIP 0.1uF 25V
C358	1-163-038-91	s	CERAMIC, CHIP 0.1uF 25V
C359	1-163-038-91	s	CERAMIC, CHIP 0.1uF 25V
C360	1-163-038-91	s	CERAMIC, CHIP 0.1uF 25V
C361	1-163-038-91	s	CERAMIC, CHIP 0.1uF 25V
C362	1-163-038-91	s	CERAMIC, CHIP 0.1uF 25V

(DV-17 BOARD(For PAL); Suffix -12)

Ref. No. or Q'ty	Part No.	SP	Description
C363	1-163-038-91	s	CERAMIC, CHIP 0.1uF 25V
C364	1-126-396-11	s	ELECT, CHIP 47uF 20% 16V
C366	1-163-038-91	s	CERAMIC, CHIP 0.1uF 25V
C367	1-163-038-91	s	CERAMIC, CHIP 0.1uF 25V
C368	1-163-038-91	s	CERAMIC, CHIP 0.1uF 25V
C369	1-163-038-91	s	CERAMIC, CHIP 0.1uF 25V
C370	1-163-038-91	s	CERAMIC, CHIP 0.1uF 25V
C371	1-163-038-91	s	CERAMIC, CHIP 0.1uF 25V
C372	1-163-038-91	s	CERAMIC, CHIP 0.1uF 25V
C373	1-163-038-91	s	CERAMIC, CHIP 0.1uF 25V
C374	1-126-394-11	s	ELECT, CHIP 10uF 20% 16V
C375	1-163-038-91	s	CERAMIC, CHIP 0.1uF 25V
C376	1-163-038-91	s	CERAMIC, CHIP 0.1uF 25V
C378	1-163-038-91	s	CERAMIC, CHIP 0.1uF 25V
C379	1-163-038-91	s	CERAMIC, CHIP 0.1uF 25V
C381	1-126-396-11	s	ELECT, CHIP 47uF 20% 16V
C382	1-126-396-11	s	ELECT, CHIP 47uF 20% 16V
C383	1-163-038-91	s	CERAMIC, CHIP 0.1uF 25V
C384	1-163-038-91	s	CERAMIC, CHIP 0.1uF 25V
C385	1-163-038-91	s	CERAMIC, CHIP 0.1uF 25V
C386	1-163-038-91	s	CERAMIC, CHIP 0.1uF 25V
C387	1-126-396-11	s	ELECT, CHIP 47uF 20% 16V
C388	1-163-038-91	s	CERAMIC, CHIP 0.1uF 25V
C389	1-163-038-91	s	CERAMIC, CHIP 0.1uF 25V
C390	1-126-396-11	s	ELECT, CHIP 47uF 20% 16V
C391	1-163-038-91	s	CERAMIC, CHIP 0.1uF 25V
C392	1-163-038-91	s	CERAMIC, CHIP 0.1uF 25V
C401	1-163-259-91	s	CERAMIC, CHIP 220pF 5% 50V
C402	1-163-259-91	s	CERAMIC, CHIP 220pF 5% 50V
C403	1-163-251-11	s	CERAMIC, CHIP 100pF 5% 50V
C404	1-163-251-11	s	CERAMIC, CHIP 100pF 5% 50V
C405	1-163-139-00	s	CERAMIC, CHIP 820pF 5% 50V
C406	1-163-251-11	s	CERAMIC, CHIP 100pF 5% 50V
C407	1-126-396-11	s	ELECT, CHIP 47uF 20% 16V
C408	1-163-251-11	s	CERAMIC, CHIP 100pF 5% 50V
C409	1-126-400-11	s	ELECT, CHIP 22uF 20% 35V
C410	1-126-400-11	s	ELECT, CHIP 22uF 20% 35V
C411	1-163-235-11	s	CERAMIC, CHIP 22pF 5% 50V
C412	1-163-235-11	s	CERAMIC, CHIP 22pF 5% 50V
C413	1-126-400-11	s	ELECT, CHIP 22uF 20% 35V
C414	1-163-251-11	s	CERAMIC, CHIP 100pF 5% 50V
C415	1-163-251-11	s	CERAMIC, CHIP 100pF 5% 50V
C417	1-126-400-11	s	ELECT, CHIP 22uF 20% 35V
C419	1-126-394-11	s	ELECT, CHIP 10uF 20% 16V
C420	1-126-394-11	s	ELECT, CHIP 10uF 20% 16V
C421	1-163-275-11	s	CERAMIC, CHIP 0.001uF 5% 50V
C422	1-163-038-91	s	CERAMIC, CHIP 0.1uF 25V
C423	1-163-038-91	s	CERAMIC, CHIP 0.1uF 25V
C424	1-163-038-91	s	CERAMIC, CHIP 0.1uF 25V
C425	1-163-235-11	s	CERAMIC, CHIP 22pF 5% 50V
C501	1-163-259-91	s	CERAMIC, CHIP 220pF 5% 50V
C502	1-163-259-91	s	CERAMIC, CHIP 220pF 5% 50V
C503	1-163-251-11	s	CERAMIC, CHIP 100pF 5% 50V
C504	1-163-251-11	s	CERAMIC, CHIP 100pF 5% 50V
C505	1-163-139-00	s	CERAMIC, CHIP 820pF 5% 50V
C506	1-163-251-11	s	CERAMIC, CHIP 100pF 5% 50V
C507	1-126-396-11	s	ELECT, CHIP 47uF 20% 16V
C508	1-163-251-11	s	CERAMIC, CHIP 100pF 5% 50V
C509	1-126-400-11	s	ELECT, CHIP 22uF 20% 35V

(DV-17 BOARD(For PAL); Suffix -12)

Ref. No. or Q'ty	Part No.	SP	Description
C510	1-126-400-11	s	ELECT, CHIP 22uF 20% 35V
C511	1-163-235-11	s	CERAMIC, CHIP 22pF 5% 50V
C512	1-163-235-11	s	CERAMIC, CHIP 22pF 5% 50V
C513	1-126-400-11	s	ELECT, CHIP 22uF 20% 35V
C514	1-163-251-11	s	CERAMIC, CHIP 100pF 5% 50V
C515	1-163-251-11	s	CERAMIC, CHIP 100pF 5% 50V
C517	1-126-400-11	s	ELECT, CHIP 22uF 20% 35V
C519	1-163-275-11	s	CERAMIC, CHIP 0.001uF 5% 50V
C520	1-126-394-11	s	ELECT, CHIP 10uF 20% 16V
C521	1-126-394-11	s	ELECT, CHIP 10uF 20% 16V
C522	1-163-038-91	s	CERAMIC, CHIP 0.1uF 25V
C523	1-163-038-91	s	CERAMIC, CHIP 0.1uF 25V
C524	1-163-038-91	s	CERAMIC, CHIP 0.1uF 25V
C525	1-163-235-11	s	CERAMIC, CHIP 22pF 5% 50V
C601	1-163-259-91	s	CERAMIC, CHIP 220pF 5% 50V
C602	1-163-259-91	s	CERAMIC, CHIP 220pF 5% 50V
C603	1-163-251-11	s	CERAMIC, CHIP 100pF 5% 50V
C604	1-163-251-11	s	CERAMIC, CHIP 100pF 5% 50V
C605	1-163-139-00	s	CERAMIC, CHIP 820pF 5% 50V
C606	1-163-251-11	s	CERAMIC, CHIP 100pF 5% 50V
C607	1-126-396-11	s	ELECT, CHIP 47uF 20% 16V
C608	1-163-251-11	s	CERAMIC, CHIP 100pF 5% 50V
C609	1-126-400-11	s	ELECT, CHIP 22uF 20% 35V
C610	1-126-400-11	s	ELECT, CHIP 22uF 20% 35V
C611	1-163-235-11	s	CERAMIC, CHIP 22pF 5% 50V
C612	1-163-235-11	s	CERAMIC, CHIP 22pF 5% 50V
C613	1-126-400-11	s	ELECT, CHIP 22uF 20% 35V
C614	1-163-251-11	s	CERAMIC, CHIP 100pF 5% 50V
C615	1-163-251-11	s	CERAMIC, CHIP 100pF 5% 50V
C617	1-126-400-11	s	ELECT, CHIP 22uF 20% 35V
C619	1-163-275-11	s	CERAMIC, CHIP 0.001uF 5% 50V
C620	1-126-394-11	s	ELECT, CHIP 10uF 20% 16V
C621	1-126-394-11	s	ELECT, CHIP 10uF 20% 16V
C622	1-163-038-91	s	CERAMIC, CHIP 0.1uF 25V
C623	1-163-038-91	s	CERAMIC, CHIP 0.1uF 25V
C624	1-163-038-91	s	CERAMIC, CHIP 0.1uF 25V
C625	1-163-235-11	s	CERAMIC, CHIP 22pF 5% 50V
C701	1-163-259-91	s	CERAMIC, CHIP 220pF 5% 50V
C702	1-163-259-91	s	CERAMIC, CHIP 220pF 5% 50V
C703	1-163-251-11	s	CERAMIC, CHIP 100pF 5% 50V
C704	1-163-251-11	s	CERAMIC, CHIP 100pF 5% 50V
C705	1-163-139-00	s	CERAMIC, CHIP 820pF 5% 50V
C706	1-163-251-11	s	CERAMIC, CHIP 100pF 5% 50V
C707	1-126-396-11	s	ELECT, CHIP 47uF 20% 16V
C708	1-163-251-11	s	CERAMIC, CHIP 100pF 5% 50V
C709	1-126-400-11	s	ELECT, CHIP 22uF 20% 35V
C710	1-126-400-11	s	ELECT, CHIP 22uF 20% 35V
C711	1-163-235-11	s	CERAMIC, CHIP 22pF 5% 50V
C712	1-163-235-11	s	CERAMIC, CHIP 22pF 5% 50V
C713	1-126-400-11	s	ELECT, CHIP 22uF 20% 35V
C714	1-163-251-11	s	CERAMIC, CHIP 100pF 5% 50V
C715	1-163-251-11	s	CERAMIC, CHIP 100pF 5% 50V
C716	1-126-400-11	s	ELECT, CHIP 22uF 20% 35V
C719	1-163-275-11	s	CERAMIC, CHIP 0.001uF 5% 50V
C720	1-126-394-11	s	ELECT, CHIP 10uF 20% 16V
C721	1-126-394-11	s	ELECT, CHIP 10uF 20% 16V
C722	1-163-038-91	s	CERAMIC, CHIP 0.1uF 25V
C723	1-163-038-91	s	CERAMIC, CHIP 0.1uF 25V
C724	1-163-038-91	s	CERAMIC, CHIP 0.1uF 25V

(DV-17 BOARD(For PAL); Suffix -12)

Ref. No. or Q'ty	Part No.	SP	Description
C725	1-163-235-11	s	CERAMIC, CHIP 22pF 5% 50V
D151	8-719-027-95	s	DIODE HSM88WK
D152	8-719-041-39	s	DIODE KV1470
D301	8-719-041-39	s	DIODE KV1470
D302	8-719-041-39	s	DIODE KV1470
D401	8-719-801-48	s	DIODE 1SS193
D402	8-719-820-41	s	DIODE 1SS302
D403	8-719-820-41	s	DIODE 1SS302
D501	8-719-801-48	s	DIODE 1SS193
D502	8-719-820-41	s	DIODE 1SS302
D503	8-719-820-41	s	DIODE 1SS302
D801	8-719-801-48	s	DIODE 1SS193
D803	8-719-820-41	s	DIODE 1SS302
D805	8-719-820-41	s	DIODE 1SS302
D808	8-719-801-48	s	DIODE 1SS193
D810	8-719-820-41	s	DIODE 1SS302
D812	8-719-820-41	s	DIODE 1SS302
FB101	1-233-674-21	s	FILTER BLOCK, NOISE, CHIP
FB102	1-233-674-21	s	FILTER BLOCK, NOISE, CHIP
FL201	1-233-314-11	s	FILTER, NOISE, CHIP
IC10	8-759-009-07	s	IC MC14053BF
IC11	8-759-009-06	s	IC MC14052BF
IC12	8-759-702-02	s	IC NJM062M
IC13	8-759-157-17	s	IC PQ05SZ1U
IC14	8-759-172-41	s	IC L78M09T-TL
IC15	8-759-068-03	s	IC NJM79L09UA
IC101	8-759-337-30	s	IC UPD482445LGW-B10-E2
IC102	8-759-385-90	s	IC CXD2187AR
IC103	8-759-524-28	s	IC TC74VHC245FT(EL)
IC104	8-759-524-28	s	IC TC74VHC245FT(EL)
IC105	8-759-167-20	s	IC UPD42280GU-30
IC106	8-759-167-20	s	IC UPD42280GU-30
IC107	8-759-186-77	s	IC TC74VHC541F
IC108	8-759-186-77	s	IC TC74VHC541F
IC121	8-759-328-28	s	IC ZA4024
IC122	8-759-426-26	s	IC CXD8608R
IC123	8-759-328-28	s	IC ZA4024
IC124	8-752-378-68	s	IC CXD3101R
IC125	8-759-327-31	s	IC CXD2183R
IC151	8-759-186-77	s	IC TC74VHC541F
IC152	8-752-375-05	s	IC CXD2191R-T6
IC153	8-759-186-63	s	IC TC74VHC245F(EL)
IC201	8-759-457-61	s	IC CXD8628BR
IC207	8-759-081-48	s	IC TC74VHC08F
IC209	8-759-186-51	s	IC TC74VHC157FS(EL)
IC211	8-759-186-51	s	IC TC74VHC157FS(EL)
IC212	8-759-186-63	s	IC TC74VHC245F(EL)
IC214	8-759-186-63	s	IC TC74VHC245F(EL)
IC215	8-759-271-86	s	IC TC7SH04FU
IC252	8-759-337-74	s	IC HM62V256LT8Z
IC253	8-759-337-74	s	IC HM62V256LT8Z
IC254	8-759-483-02	s	IC CXD8713Q
IC301	8-752-374-96	s	IC CXD2190R-T6
IC302	8-752-374-96	s	IC CXD2190R-T6
IC303	8-759-337-74	s	IC HM62V256LT8Z
IC304	8-759-337-74	s	IC HM62V256LT8Z

(DV-17 BOARD(For PAL); Suffix -12)

Ref. No. or Q'ty	Part No.	SP	Description
IC305	8-759-523-78	s	IC TC74VHC00FT(EL)
IC308	8-759-362-16	s	IC CXD2913AQ
IC309	8-759-362-16	s	IC CXD2913AQ
IC310	8-759-702-02	s	IC NJM062M
IC311	8-759-702-02	s	IC NJM062M
IC351	8-759-272-21	s	IC TC74VHCT541F
IC352	8-759-523-43	s	IC TC74ACT157FT(EL)
IC353	8-752-352-30	s	IC CXD2705AQ
IC354	8-752-352-30	s	IC CXD2705AQ
IC355	8-759-358-23	s	IC NN514256J-45-T
IC356	8-759-358-23	s	IC NN514256J-45-T
IC357	8-759-326-71	s	IC CXD8517Q
IC358	8-759-326-71	s	IC CXD8517Q
IC359	8-759-523-78	s	IC TC74VHC00FT(EL)
IC360	8-759-523-95	s	IC TC74VHC74FT(EL)
IC361	8-759-523-95	s	IC TC74VHC74FT(EL)
IC381	8-759-173-51	s	IC SM5872AS-ET
IC382	8-759-173-51	s	IC SM5872AS-ET
IC401	8-759-745-64	s	IC NJM4560M
IC402	8-759-745-64	s	IC NJM4560M
IC403	8-759-745-64	s	IC NJM4560M
IC404	8-759-745-64	s	IC NJM4560M
IC405	8-759-521-14	s	IC NJM5532S-D
IC501	8-759-745-64	s	IC NJM4560M
IC503	8-759-745-64	s	IC NJM4560M
IC504	8-759-745-64	s	IC NJM4560M
IC505	8-759-521-14	s	IC NJM5532S-D
IC601	8-759-745-64	s	IC NJM4560M
IC602	8-759-702-02	s	IC NJM062M
IC603	8-759-702-02	s	IC NJM062M
IC604	8-759-702-02	s	IC NJM062M
IC605	8-759-521-14	s	IC NJM5532S-D
IC701	8-759-745-64	s	IC NJM4560M
IC703	8-759-702-02	s	IC NJM062M
IC704	8-759-702-02	s	IC NJM062M
IC705	8-759-521-14	s	IC NJM5532S-D
L11	1-412-364-11	s	FILTER, NOISE, CHIP
L101	1-410-740-31	s	INDUCTOR, CHIP 0.82uH
L103	1-410-381-11	s	INDUCTOR, CHIP 10uH
L104	1-410-381-11	s	INDUCTOR, CHIP 10uH
L122	1-410-740-31	s	INDUCTOR, CHIP 0.82uH
L151	1-410-381-11	s	INDUCTOR, CHIP 10uH
L153	1-410-381-11	s	INDUCTOR, CHIP 10uH
L154	1-410-740-31	s	INDUCTOR, CHIP 0.82uH
L201	1-410-740-31	s	INDUCTOR, CHIP 0.82uH
L203	1-410-740-31	s	INDUCTOR, CHIP 0.82uH
L251	1-410-381-11	s	INDUCTOR, CHIP 10uH
L252	1-410-381-11	s	INDUCTOR, CHIP 10uH
L301	1-410-740-31	s	INDUCTOR, CHIP 0.82uH
L303	1-410-381-11	s	INDUCTOR, CHIP 10uH
L304	1-410-381-11	s	INDUCTOR, CHIP 10uH
L307	1-410-381-11	s	INDUCTOR, CHIP 10uH
L308	1-410-381-11	s	INDUCTOR, CHIP 10uH
L309	1-410-381-11	s	INDUCTOR, CHIP 10uH
L310	1-410-381-11	s	INDUCTOR, CHIP 10uH
L311	1-410-740-31	s	INDUCTOR, CHIP 0.82uH
L351	1-410-740-31	s	INDUCTOR, CHIP 0.82uH
L354	1-410-381-11	s	INDUCTOR, CHIP 10uH

(DV-17 BOARD(For PAL); Suffix -12)

Ref. No. or Q'ty	Part No.	SP	Description
L355	1-410-381-11	s	INDUCTOR, CHIP 10uH
L356	1-410-381-11	s	INDUCTOR, CHIP 10uH
L357	1-410-381-11	s	INDUCTOR, CHIP 10uH
L381	1-410-381-11	s	INDUCTOR, CHIP 10uH
L382	1-410-381-11	s	INDUCTOR, CHIP 10uH
L383	1-410-381-11	s	INDUCTOR, CHIP 10uH
L384	1-410-381-11	s	INDUCTOR, CHIP 10uH
LV301	1-411-984-11	s	COIL, VAR, CHIP
LV302	1-411-984-11	s	COIL, VAR, CHIP
PS10	⚠ 1-576-124-11	s	LINK, IC, CHIP 1A
PS11	⚠ 1-576-124-11	s	LINK, IC, CHIP 1A
PS12	⚠ 1-576-124-11	s	LINK, IC, CHIP 1A
PS13	⚠ 1-576-124-11	s	LINK, IC, CHIP 1A
PS14	⚠ 1-576-124-11	s	LINK, IC, CHIP 1A
PS15	⚠ 1-533-282-21	s	LINK, IC, CHIP 2A
PS16	⚠ 1-576-124-11	s	LINK, IC, CHIP 1A
PS17	⚠ 1-576-124-11	s	LINK, IC, CHIP 1A
Q10	1-801-806-11	s	TRANSISTOR DTC144EKA-T146
Q11	1-801-806-11	s	TRANSISTOR DTC144EKA-T146
Q12	1-801-806-11	s	TRANSISTOR DTC144EKA-T146
Q13	8-729-027-38	s	TRANSISTOR DTA144EKA-T146
Q14	8-729-117-32	s	TRANSISTOR 2SC4177
Q15	1-801-806-11	s	TRANSISTOR DTC144EKA-T146
Q16	8-729-202-38	s	TRANSISTOR 2SC3326N
Q17	8-729-202-38	s	TRANSISTOR 2SC3326N
Q18	8-729-202-38	s	TRANSISTOR 2SC3326N
Q19	8-729-027-38	s	TRANSISTOR DTA144EKA-T146
Q381	1-801-806-11	s	TRANSISTOR DTC144EKA-T146
Q382	1-801-806-11	s	TRANSISTOR DTC144EKA-T146
Q383	1-801-806-11	s	TRANSISTOR DTC144EKA-T146
Q384	1-801-806-11	s	TRANSISTOR DTC144EKA-T146
Q385	1-801-806-11	s	TRANSISTOR DTC144EKA-T146
Q386	8-729-027-38	s	TRANSISTOR DTA144EKA-T146
Q387	8-729-027-38	s	TRANSISTOR DTA144EKA-T146
Q388	8-729-027-38	s	TRANSISTOR DTA144EKA-T146
Q389	8-729-027-38	s	TRANSISTOR DTA144EKA-T146
Q390	8-729-027-38	s	TRANSISTOR DTA144EKA-T146
Q401	8-729-202-38	s	TRANSISTOR 2SC3326N
Q402	8-729-202-38	s	TRANSISTOR 2SC3326N
Q403	8-729-202-38	s	TRANSISTOR 2SC3326N
Q404	8-729-202-38	s	TRANSISTOR 2SC3326N
Q405	8-729-202-38	s	TRANSISTOR 2SC3326N
Q501	8-729-202-38	s	TRANSISTOR 2SC3326N
Q502	8-729-202-38	s	TRANSISTOR 2SC3326N
Q503	8-729-202-38	s	TRANSISTOR 2SC3326N
Q504	8-729-202-38	s	TRANSISTOR 2SC3326N
Q505	8-729-202-38	s	TRANSISTOR 2SC3326N
Q601	8-729-202-38	s	TRANSISTOR 2SC3326N
Q602	8-729-202-38	s	TRANSISTOR 2SC3326N
Q603	8-729-202-38	s	TRANSISTOR 2SC3326N
Q604	8-729-202-38	s	TRANSISTOR 2SC3326N
Q605	8-729-202-38	s	TRANSISTOR 2SC3326N
Q701	8-729-202-38	s	TRANSISTOR 2SC3326N
Q702	8-729-202-38	s	TRANSISTOR 2SC3326N
Q703	8-729-202-38	s	TRANSISTOR 2SC3326N
Q704	8-729-202-38	s	TRANSISTOR 2SC3326N
Q705	8-729-202-38	s	TRANSISTOR 2SC3326N

(DV-17 BOARD(For PAL); Suffix -12)

Ref. No. or Q'ty	Part No.	SP	Description
R10	1-216-073-00	s	METAL, CHIP 10k 5% 1/10W
R11	1-216-073-00	s	METAL, CHIP 10k 5% 1/10W
R12	1-216-073-00	s	METAL, CHIP 10k 5% 1/10W
R13	1-216-057-00	s	METAL, CHIP 2.2k 5% 1/10W
R14	1-216-057-00	s	METAL, CHIP 2.2k 5% 1/10W
R15	1-216-025-91	s	METAL, CHIP 100 5% 1/10W
R16	1-216-081-00	s	METAL, CHIP 22k 5% 1/10W
R17	1-216-081-00	s	METAL, CHIP 22k 5% 1/10W
R18	1-216-025-91	s	METAL, CHIP 100 5% 1/10W
R20	1-216-057-00	s	METAL, CHIP 2.2k 5% 1/10W
R21	1-216-025-91	s	METAL, CHIP 100 5% 1/10W
R22	1-216-073-00	s	METAL, CHIP 10k 5% 1/10W
R23	1-216-073-00	s	METAL, CHIP 10k 5% 1/10W
R24	1-216-073-00	s	METAL, CHIP 10k 5% 1/10W
R25	1-216-073-00	s	METAL, CHIP 10k 5% 1/10W
R26	1-216-073-00	s	METAL, CHIP 10k 5% 1/10W
R27	1-216-073-00	s	METAL, CHIP 10k 5% 1/10W
R28	1-216-073-00	s	METAL, CHIP 10k 5% 1/10W
R29	1-216-073-00	s	METAL, CHIP 10k 5% 1/10W
R30	1-216-073-00	s	METAL, CHIP 10k 5% 1/10W
R31	1-216-073-00	s	METAL, CHIP 10k 5% 1/10W
R103	1-216-089-91	s	METAL, CHIP 47k 5% 1/10W
R104	1-216-089-91	s	METAL, CHIP 47k 5% 1/10W
R105	1-216-089-91	s	METAL, CHIP 47k 5% 1/10W
R106	1-216-089-91	s	METAL, CHIP 47k 5% 1/10W
R109	1-216-089-91	s	METAL, CHIP 47k 5% 1/10W
R110	1-216-025-91	s	METAL, CHIP 100 5% 1/10W
R151	1-216-025-91	s	METAL, CHIP 100 5% 1/10W
R152	1-216-295-91	s	RES, CHIP 0
R154	1-216-025-91	s	METAL, CHIP 100 5% 1/10W
R155	1-216-025-91	s	METAL, CHIP 100 5% 1/10W
R157	1-216-129-00	s	METAL, CHIP 2.2M 5% 1/10W
R158	1-216-041-00	s	METAL, CHIP 470 5% 1/10W
R159	1-216-073-00	s	METAL, CHIP 10k 5% 1/10W
R160	1-216-073-00	s	METAL, CHIP 10k 5% 1/10W
R162	1-216-065-91	s	METAL, CHIP 4.7k 5% 1/10W
R163	1-216-025-91	s	METAL, CHIP 100 5% 1/10W
R167	1-216-025-91	s	METAL, CHIP 100 5% 1/10W
R168	1-216-025-91	s	METAL, CHIP 100 5% 1/10W
R169	1-216-025-91	s	METAL, CHIP 100 5% 1/10W
R170	1-216-025-91	s	METAL, CHIP 100 5% 1/10W
R173	1-216-295-91	s	RES, CHIP 0
R205	1-216-025-91	s	METAL, CHIP 100 5% 1/10W
R206	1-216-295-91	s	RES, CHIP 0
R207	1-216-295-91	s	RES, CHIP 0
R208	1-216-295-91	s	RES, CHIP 0
R209	1-216-295-91	s	RES, CHIP 0
R210	1-216-295-91	s	RES, CHIP 0
R213	1-216-025-91	s	METAL, CHIP 100 5% 1/10W
R214	1-216-025-91	s	METAL, CHIP 100 5% 1/10W
R251	1-216-025-91	s	METAL, CHIP 100 5% 1/10W
R252	1-216-025-91	s	METAL, CHIP 100 5% 1/10W
R253	1-216-025-91	s	METAL, CHIP 100 5% 1/10W
R254	1-216-025-91	s	METAL, CHIP 100 5% 1/10W
R255	1-216-295-91	s	RES, CHIP 0
R256	1-216-295-91	s	RES, CHIP 0
R274	1-216-295-91	s	RES, CHIP 0
R275	1-216-295-91	s	RES, CHIP 0
R276	1-216-295-91	s	RES, CHIP 0

(DV-17 BOARD(For PAL); Suffix -12)

Ref. No. or Q'ty	Part No.	SP	Description
R277	1-216-295-91	s	RES, CHIP 0
R278	1-216-295-91	s	RES, CHIP 0
R283	1-216-295-91	s	RES, CHIP 0
R301	1-216-295-91	s	RES, CHIP 0
R303	1-216-295-91	s	RES, CHIP 0
R308	1-216-073-00	s	METAL, CHIP 10k 5% 1/10W
R309	1-216-073-00	s	METAL, CHIP 10k 5% 1/10W
R310	1-216-097-91	s	METAL, CHIP 100k 5% 1/10W
R311	1-216-091-00	s	METAL, CHIP 56k 5% 1/10W
R312	1-216-097-91	s	METAL, CHIP 100k 5% 1/10W
R313	1-216-091-00	s	METAL, CHIP 56k 5% 1/10W
R314	1-216-089-91	s	METAL, CHIP 47k 5% 1/10W
R315	1-216-049-91	s	METAL, CHIP 1k 5% 1/10W
R316	1-216-089-91	s	METAL, CHIP 47k 5% 1/10W
R318	1-216-089-91	s	METAL, CHIP 47k 5% 1/10W
R319	1-216-077-00	s	METAL, CHIP 15k 5% 1/10W
R320	1-216-089-91	s	METAL, CHIP 47k 5% 1/10W
R321	1-216-089-91	s	METAL, CHIP 47k 5% 1/10W
R322	1-216-089-91	s	METAL, CHIP 47k 5% 1/10W
R323	1-216-089-91	s	METAL, CHIP 47k 5% 1/10W
R324	1-216-089-91	s	METAL, CHIP 47k 5% 1/10W
R325	1-216-089-91	s	METAL, CHIP 47k 5% 1/10W
R326	1-216-089-91	s	METAL, CHIP 47k 5% 1/10W
R327	1-216-089-91	s	METAL, CHIP 47k 5% 1/10W
R328	1-216-073-00	s	METAL, CHIP 10k 5% 1/10W
R329	1-216-295-91	s	RES, CHIP 0
R330	1-216-025-91	s	METAL, CHIP 100 5% 1/10W
R331	1-216-089-91	s	METAL, CHIP 47k 5% 1/10W
R355	1-216-049-91	s	METAL, CHIP 1k 5% 1/10W
R381	1-216-049-91	s	METAL, CHIP 1k 5% 1/10W
R382	1-216-081-00	s	METAL, CHIP 22k 5% 1/10W
R383	1-216-081-00	s	METAL, CHIP 22k 5% 1/10W
R384	1-216-081-00	s	METAL, CHIP 22k 5% 1/10W
R385	1-216-081-00	s	METAL, CHIP 22k 5% 1/10W
R386	1-216-073-00	s	METAL, CHIP 10k 5% 1/10W
R401	1-216-675-11	s	METAL, CHIP 10k 0.5% 1/10W
R402	1-216-675-11	s	METAL, CHIP 10k 0.5% 1/10W
R403	1-216-675-11	s	METAL, CHIP 10k 0.5% 1/10W
R404	1-216-675-11	s	METAL, CHIP 10k 0.5% 1/10W
R405	1-216-683-11	s	METAL, CHIP 22k 0.5% 1/10W
R406	1-216-683-11	s	METAL, CHIP 22k 0.5% 1/10W
R407	1-216-677-11	s	METAL, CHIP 12k 0.5% 1/10W
R408	1-216-677-11	s	METAL, CHIP 12k 0.5% 1/10W
R409	1-216-683-11	s	METAL, CHIP 22k 0.5% 1/10W
R410	1-216-073-00	s	METAL, CHIP 10k 5% 1/10W
R411	1-216-683-11	s	METAL, CHIP 22k 0.5% 1/10W
R412	1-216-667-11	s	METAL, CHIP 4.7k 0.5% 1/10W
R413	1-216-674-11	s	METAL, CHIP 9.1k 0.5% 1/10W
R414	1-216-667-11	s	METAL, CHIP 4.7k 0.5% 1/10W
R415	1-216-073-00	s	METAL, CHIP 10k 5% 1/10W
R416	1-216-675-11	s	METAL, CHIP 10k 0.5% 1/10W
R417	1-216-073-00	s	METAL, CHIP 10k 5% 1/10W
R418	1-216-673-11	s	METAL, CHIP 8.2k 0.5% 1/10W
R419	1-216-674-11	s	METAL, CHIP 9.1k 0.5% 1/10W
R420	1-216-667-11	s	METAL, CHIP 4.7k 0.5% 1/10W
R421	1-216-073-00	s	METAL, CHIP 10k 5% 1/10W
R422	1-216-677-11	s	METAL, CHIP 12k 0.5% 1/10W
R423	1-216-667-11	s	METAL, CHIP 4.7k 0.5% 1/10W
R424	1-216-675-11	s	METAL, CHIP 10k 0.5% 1/10W

(DV-17 BOARD(For PAL); Suffix -12)

Ref. No. or Q'ty	Part No.	SP	Description
R425	1-216-675-11	s	METAL, CHIP 10k 0.5% 1/10W
R426	1-216-667-11	s	METAL, CHIP 4.7k 0.5% 1/10W
R427	1-216-667-11	s	METAL, CHIP 4.7k 0.5% 1/10W
R428	1-216-667-11	s	METAL, CHIP 4.7k 0.5% 1/10W
R429	1-216-667-11	s	METAL, CHIP 4.7k 0.5% 1/10W
R430	1-216-675-11	s	METAL, CHIP 10k 0.5% 1/10W
R431	1-216-675-11	s	METAL, CHIP 10k 0.5% 1/10W
R432	1-216-049-91	s	METAL, CHIP 1k 5% 1/10W
R433	1-216-675-11	s	METAL, CHIP 10k 0.5% 1/10W
R435	1-216-049-91	s	METAL, CHIP 1k 5% 1/10W
R437	1-216-619-11	s	METAL, CHIP 47 0.5% 1/10W
R438	1-216-097-91	s	METAL, CHIP 100k 5% 1/10W
R439	1-216-097-91	s	METAL, CHIP 100k 5% 1/10W
R440	1-216-675-11	s	METAL, CHIP 10k 0.5% 1/10W
R441	1-216-619-11	s	METAL, CHIP 47 0.5% 1/10W
R442	1-220-242-11	s	METAL, CHIP 22 5% 1/4W
R445	1-220-242-11	s	METAL, CHIP 22 5% 1/4W
R448	1-216-037-00	s	METAL, CHIP 330 5% 1/10W
R449	1-216-073-00	s	METAL, CHIP 10k 5% 1/10W
R501	1-216-675-11	s	METAL, CHIP 10k 0.5% 1/10W
R502	1-216-675-11	s	METAL, CHIP 10k 0.5% 1/10W
R503	1-216-675-11	s	METAL, CHIP 10k 0.5% 1/10W
R504	1-216-675-11	s	METAL, CHIP 10k 0.5% 1/10W
R505	1-216-683-11	s	METAL, CHIP 22k 0.5% 1/10W
R506	1-216-683-11	s	METAL, CHIP 22k 0.5% 1/10W
R507	1-216-677-11	s	METAL, CHIP 12k 0.5% 1/10W
R508	1-216-677-11	s	METAL, CHIP 12k 0.5% 1/10W
R509	1-216-683-11	s	METAL, CHIP 22k 0.5% 1/10W
R510	1-216-073-00	s	METAL, CHIP 10k 5% 1/10W
R511	1-216-683-11	s	METAL, CHIP 22k 0.5% 1/10W
R512	1-216-667-11	s	METAL, CHIP 4.7k 0.5% 1/10W
R513	1-216-674-11	s	METAL, CHIP 9.1k 0.5% 1/10W
R514	1-216-667-11	s	METAL, CHIP 4.7k 0.5% 1/10W
R515	1-216-073-00	s	METAL, CHIP 10k 5% 1/10W
R516	1-216-675-11	s	METAL, CHIP 10k 0.5% 1/10W
R517	1-216-073-00	s	METAL, CHIP 10k 5% 1/10W
R518	1-216-673-11	s	METAL, CHIP 8.2k 0.5% 1/10W
R519	1-216-674-11	s	METAL, CHIP 9.1k 0.5% 1/10W
R520	1-216-667-11	s	METAL, CHIP 4.7k 0.5% 1/10W
R521	1-216-073-00	s	METAL, CHIP 10k 5% 1/10W
R522	1-216-677-11	s	METAL, CHIP 12k 0.5% 1/10W
R523	1-216-667-11	s	METAL, CHIP 4.7k 0.5% 1/10W
R524	1-216-675-11	s	METAL, CHIP 10k 0.5% 1/10W
R525	1-216-675-11	s	METAL, CHIP 10k 0.5% 1/10W
R526	1-216-667-11	s	METAL, CHIP 4.7k 0.5% 1/10W
R527	1-216-667-11	s	METAL, CHIP 4.7k 0.5% 1/10W
R528	1-216-667-11	s	METAL, CHIP 4.7k 0.5% 1/10W
R529	1-216-667-11	s	METAL, CHIP 4.7k 0.5% 1/10W
R530	1-216-675-11	s	METAL, CHIP 10k 0.5% 1/10W
R531	1-216-675-11	s	METAL, CHIP 10k 0.5% 1/10W
R532	1-216-049-91	s	METAL, CHIP 1k 5% 1/10W
R533	1-216-675-11	s	METAL, CHIP 10k 0.5% 1/10W
R535	1-216-049-91	s	METAL, CHIP 1k 5% 1/10W
R537	1-216-619-11	s	METAL, CHIP 47 0.5% 1/10W
R538	1-216-097-91	s	METAL, CHIP 100k 5% 1/10W
R539	1-216-097-91	s	METAL, CHIP 100k 5% 1/10W
R540	1-216-675-11	s	METAL, CHIP 10k 0.5% 1/10W
R541	1-216-619-11	s	METAL, CHIP 47 0.5% 1/10W
R544	1-220-242-11	s	METAL, CHIP 22 5% 1/4W

(DV-17 BOARD(For PAL); Suffix -12)

Ref. No. or Q'ty	Part No.	SP	Description
R547	1-220-242-11	s	METAL, CHIP 22 5% 1/4W
R548	1-216-037-00	s	METAL, CHIP 330 5% 1/10W
R549	1-216-073-00	s	METAL, CHIP 10k 5% 1/10W
R601	1-216-675-11	s	METAL, CHIP 10k 0.5% 1/10W
R602	1-216-675-11	s	METAL, CHIP 10k 0.5% 1/10W
R603	1-216-675-11	s	METAL, CHIP 10k 0.5% 1/10W
R604	1-216-675-11	s	METAL, CHIP 10k 0.5% 1/10W
R605	1-216-683-11	s	METAL, CHIP 22k 0.5% 1/10W
R606	1-216-683-11	s	METAL, CHIP 22k 0.5% 1/10W
R607	1-216-677-11	s	METAL, CHIP 12k 0.5% 1/10W
R608	1-216-677-11	s	METAL, CHIP 12k 0.5% 1/10W
R609	1-216-683-11	s	METAL, CHIP 22k 0.5% 1/10W
R610	1-216-073-00	s	METAL, CHIP 10k 5% 1/10W
R611	1-216-683-11	s	METAL, CHIP 22k 0.5% 1/10W
R612	1-216-667-11	s	METAL, CHIP 4.7k 0.5% 1/10W
R613	1-216-674-11	s	METAL, CHIP 9.1k 0.5% 1/10W
R614	1-216-667-11	s	METAL, CHIP 4.7k 0.5% 1/10W
R615	1-216-073-00	s	METAL, CHIP 10k 5% 1/10W
R616	1-216-675-11	s	METAL, CHIP 10k 0.5% 1/10W
R617	1-216-073-00	s	METAL, CHIP 10k 5% 1/10W
R618	1-216-673-11	s	METAL, CHIP 8.2k 0.5% 1/10W
R619	1-216-674-11	s	METAL, CHIP 9.1k 0.5% 1/10W
R620	1-216-667-11	s	METAL, CHIP 4.7k 0.5% 1/10W
R621	1-216-073-00	s	METAL, CHIP 10k 5% 1/10W
R622	1-216-677-11	s	METAL, CHIP 12k 0.5% 1/10W
R623	1-216-667-11	s	METAL, CHIP 4.7k 0.5% 1/10W
R624	1-216-675-11	s	METAL, CHIP 10k 0.5% 1/10W
R625	1-216-675-11	s	METAL, CHIP 10k 0.5% 1/10W
R626	1-216-667-11	s	METAL, CHIP 4.7k 0.5% 1/10W
R627	1-216-667-11	s	METAL, CHIP 4.7k 0.5% 1/10W
R628	1-216-667-11	s	METAL, CHIP 4.7k 0.5% 1/10W
R629	1-216-667-11	s	METAL, CHIP 4.7k 0.5% 1/10W
R630	1-216-675-11	s	METAL, CHIP 10k 0.5% 1/10W
R631	1-216-675-11	s	METAL, CHIP 10k 0.5% 1/10W
R632	1-216-049-91	s	METAL, CHIP 1k 5% 1/10W
R633	1-216-675-11	s	METAL, CHIP 10k 0.5% 1/10W
R635	1-216-049-91	s	METAL, CHIP 1k 5% 1/10W
R637	1-216-619-11	s	METAL, CHIP 47 0.5% 1/10W
R638	1-216-097-91	s	METAL, CHIP 100k 5% 1/10W
R639	1-216-097-91	s	METAL, CHIP 100k 5% 1/10W
R640	1-216-675-11	s	METAL, CHIP 10k 0.5% 1/10W
R641	1-216-619-11	s	METAL, CHIP 47 0.5% 1/10W
R644	1-220-242-11	s	METAL, CHIP 22 5% 1/4W
R645	1-220-242-11	s	METAL, CHIP 22 5% 1/4W
R648	1-216-037-00	s	METAL, CHIP 330 5% 1/10W
R649	1-216-073-00	s	METAL, CHIP 10k 5% 1/10W
R701	1-216-675-11	s	METAL, CHIP 10k 0.5% 1/10W
R702	1-216-675-11	s	METAL, CHIP 10k 0.5% 1/10W
R703	1-216-675-11	s	METAL, CHIP 10k 0.5% 1/10W
R704	1-216-675-11	s	METAL, CHIP 10k 0.5% 1/10W
R705	1-216-683-11	s	METAL, CHIP 22k 0.5% 1/10W
R706	1-216-683-11	s	METAL, CHIP 22k 0.5% 1/10W
R707	1-216-677-11	s	METAL, CHIP 12k 0.5% 1/10W
R708	1-216-677-11	s	METAL, CHIP 12k 0.5% 1/10W
R709	1-216-683-11	s	METAL, CHIP 22k 0.5% 1/10W
R710	1-216-073-00	s	METAL, CHIP 10k 5% 1/10W
R711	1-216-683-11	s	METAL, CHIP 22k 0.5% 1/10W
R712	1-216-667-11	s	METAL, CHIP 4.7k 0.5% 1/10W
R713	1-216-674-11	s	METAL, CHIP 9.1k 0.5% 1/10W

(DV-17 BOARD(For PAL); Suffix -12)

Ref. No. or Q'ty	Part No.	SP	Description
R714	1-216-667-11	s	METAL, CHIP 4.7k 0.5% 1/10W
R715	1-216-073-00	s	METAL, CHIP 10k 5% 1/10W
R716	1-216-675-11	s	METAL, CHIP 10k 0.5% 1/10W
R717	1-216-073-00	s	METAL, CHIP 10k 5% 1/10W
R718	1-216-673-11	s	METAL, CHIP 8.2k 0.5% 1/10W
R719	1-216-674-11	s	METAL, CHIP 9.1k 0.5% 1/10W
R720	1-216-667-11	s	METAL, CHIP 4.7k 0.5% 1/10W
R721	1-216-073-00	s	METAL, CHIP 10k 5% 1/10W
R722	1-216-677-11	s	METAL, CHIP 12k 0.5% 1/10W
R723	1-216-667-11	s	METAL, CHIP 4.7k 0.5% 1/10W
R724	1-216-675-11	s	METAL, CHIP 10k 0.5% 1/10W
R725	1-216-675-11	s	METAL, CHIP 10k 0.5% 1/10W
R726	1-216-667-11	s	METAL, CHIP 4.7k 0.5% 1/10W
R727	1-216-667-11	s	METAL, CHIP 4.7k 0.5% 1/10W
R728	1-216-667-11	s	METAL, CHIP 4.7k 0.5% 1/10W
R729	1-216-667-11	s	METAL, CHIP 4.7k 0.5% 1/10W
R730	1-216-675-11	s	METAL, CHIP 10k 0.5% 1/10W
R731	1-216-675-11	s	METAL, CHIP 10k 0.5% 1/10W
R732	1-216-049-91	s	METAL, CHIP 1k 5% 1/10W
R733	1-216-675-11	s	METAL, CHIP 10k 0.5% 1/10W
R735	1-216-049-91	s	METAL, CHIP 1k 5% 1/10W
R737	1-216-619-11	s	METAL, CHIP 47 0.5% 1/10W
R738	1-216-097-91	s	METAL, CHIP 100k 5% 1/10W
R739	1-216-097-91	s	METAL, CHIP 100k 5% 1/10W
R740	1-216-675-11	s	METAL, CHIP 10k 0.5% 1/10W
R741	1-216-619-11	s	METAL, CHIP 47 0.5% 1/10W
R742	1-220-242-11	s	METAL, CHIP 22 5% 1/4W
R747	1-220-242-11	s	METAL, CHIP 22 5% 1/4W
R748	1-216-037-00	s	METAL, CHIP 330 5% 1/10W
R749	1-216-073-00	s	METAL, CHIP 10k 5% 1/10W
RB101	1-239-998-11	s	RESISTOR BLOCK, CHIP 100 x 4
RB102	1-239-998-11	s	RESISTOR BLOCK, CHIP 100 x 4
RB103	1-239-998-11	s	RESISTOR BLOCK, CHIP 100 x 4
RB104	1-239-998-11	s	RESISTOR BLOCK, CHIP 100 x 4
RB105	1-239-308-11	s	RESISTOR BLOCK, CHIP 47K x 8
RB107	1-239-998-11	s	RESISTOR BLOCK, CHIP 100 x 4
RB108	1-239-998-11	s	RESISTOR BLOCK, CHIP 100 x 4
RB109	1-239-998-11	s	RESISTOR BLOCK, CHIP 100 x 4
RB151	1-239-998-11	s	RESISTOR BLOCK, CHIP 100 x 4
RB153	1-239-998-11	s	RESISTOR BLOCK, CHIP 100 x 4
RB154	1-239-998-11	s	RESISTOR BLOCK, CHIP 100 x 4
RB201	1-239-998-11	s	RESISTOR BLOCK, CHIP 100 x 4
RB202	1-239-998-11	s	RESISTOR BLOCK, CHIP 100 x 4
RB203	1-239-998-11	s	RESISTOR BLOCK, CHIP 100 x 4
RB204	1-239-998-11	s	RESISTOR BLOCK, CHIP 100 x 4
RB205	1-239-998-11	s	RESISTOR BLOCK, CHIP 100 x 4
RB251	1-239-998-11	s	RESISTOR BLOCK, CHIP 100 x 4
RB252	1-239-308-11	s	RESISTOR BLOCK, CHIP 47K x 8
RB301	1-239-308-11	s	RESISTOR BLOCK, CHIP 47K x 8
RB302	1-239-998-11	s	RESISTOR BLOCK, CHIP 100 x 4
RB303	1-239-998-11	s	RESISTOR BLOCK, CHIP 100 x 4
RB304	1-239-998-11	s	RESISTOR BLOCK, CHIP 100 x 4
RB305	1-239-998-11	s	RESISTOR BLOCK, CHIP 100 x 4
RB351	1-239-998-11	s	RESISTOR BLOCK, CHIP 100 x 4
RV401	1-241-264-11	s	RES, ADJ, METAL 10k
RV501	1-241-264-11	s	RES, ADJ, METAL 10k
RV601	1-241-264-11	s	RES, ADJ, METAL 10k
RV701	1-241-264-11	s	RES, ADJ, METAL 10k

(DV-17 BOARD(For PAL); Suffix -12)

Ref. No. or Q'ty	Part No.	SP	Description
RY401	1-515-716-11	s	RELAY (TQ2-5V)
RY501	1-515-716-11	s	RELAY (TQ2-5V)
RY601	1-515-716-11	s	RELAY (TQ2-5V)
RY701	1-515-716-11	s	RELAY (TQ2-5V)

DV-17 BOARD(For PAL); Suffix -11

Ref. No.
or Q'ty Part No. SP Description

This list corresponds to the board suffix number -11.

The parts marked * are different, depending on the product serial numbers, as shown below:
*1) Serial number; 10051 and higher (For DSR-60P CE)
*2) Serial number; 10001 through 10350 (For DSR-60P CE)
*3) Serial number; 10351 and higher (For DSR-60P CE)

1pc A-8312-964-A o MOUNTED CIRCUIT BOARD, DV-17A

The DV-17A board with board suffix number -11 includes the PD-82 board.
See the list in the PD-82 board for details.

Ref. No. or Q'ty	Part No.	SP	Description
1pc	7-621-759-45	s	+PSW, 2.6x6
1pc	3-179-084-01	s	LEVER (R), PRINTED CIRCUIT BOARD
1pc	3-179-085-01	s	LEVER (L), PRINTED CIRCUIT BOARD
C1	1-126-394-11	s	ELECT, CHIP 10uF 20% 16V
C2	1-126-394-11	s	ELECT, CHIP 10uF 20% 16V
C3	1-163-038-91	s	CERAMIC, CHIP 0.1uF 25V
C4	1-163-038-91	s	CERAMIC, CHIP 0.1uF 25V
C5	1-163-038-91	s	CERAMIC, CHIP 0.1uF 25V
C6	1-163-038-91	s	CERAMIC, CHIP 0.1uF 25V
C7	1-163-038-91	s	CERAMIC, CHIP 0.1uF 25V
C8	1-163-038-91	s	CERAMIC, CHIP 0.1uF 25V
C9	1-163-038-91	s	CERAMIC, CHIP 0.1uF 25V
C10	1-163-038-91	s	CERAMIC, CHIP 0.1uF 25V
C11	1-163-038-91	s	CERAMIC, CHIP 0.1uF 25V
C12	1-163-038-91	s	CERAMIC, CHIP 0.1uF 25V
C13	1-163-038-91	s	CERAMIC, CHIP 0.1uF 25V
C14	1-163-038-91	s	CERAMIC, CHIP 0.1uF 25V
C15	1-163-038-91	s	CERAMIC, CHIP 0.1uF 25V
C16	1-163-251-11	s	CERAMIC, CHIP 100pF 5% 50V
C17	1-163-251-11	s	CERAMIC, CHIP 100pF 5% 50V
C18	1-126-394-11	s	ELECT, CHIP 10uF 20% 16V
C19	1-126-394-11	s	ELECT, CHIP 10uF 20% 16V
C20	1-126-394-11	s	ELECT, CHIP 10uF 20% 16V
C21	1-126-394-11	s	ELECT, CHIP 10uF 20% 16V
C22	1-163-038-91	s	CERAMIC, CHIP 0.1uF 25V
C23	1-163-038-91	s	CERAMIC, CHIP 0.1uF 25V
C24	1-163-038-91	s	CERAMIC, CHIP 0.1uF 25V
C25	1-163-038-91	s	CERAMIC, CHIP 0.1uF 25V
C26	1-163-038-91	s	CERAMIC, CHIP 0.1uF 25V
C27	1-163-038-91	s	CERAMIC, CHIP 0.1uF 25V
C28	1-163-038-91	s	CERAMIC, CHIP 0.1uF 25V
C29	1-163-038-91	s	CERAMIC, CHIP 0.1uF 25V
C30	1-126-396-11	s	ELECT, CHIP 47uF 20% 16V
C31	1-126-394-11	s	ELECT, CHIP 10uF 20% 16V
C32	1-126-394-11	s	ELECT, CHIP 10uF 20% 16V
C33	1-126-396-11	s	ELECT, CHIP 47uF 20% 16V
C101	1-163-038-91	s	CERAMIC, CHIP 0.1uF 25V
C102	1-163-038-91	s	CERAMIC, CHIP 0.1uF 25V
C103	1-163-038-91	s	CERAMIC, CHIP 0.1uF 25V
C104	1-163-038-91	s	CERAMIC, CHIP 0.1uF 25V
C105	1-163-038-91	s	CERAMIC, CHIP 0.1uF 25V
C106	1-163-038-91	s	CERAMIC, CHIP 0.1uF 25V
C107	1-163-227-11	s	CERAMIC, CHIP 10pF 5% 50V
C108	1-163-038-91	s	CERAMIC, CHIP 0.1uF 25V
C109	1-163-038-91	s	CERAMIC, CHIP 0.1uF 25V
C110	1-126-394-11	s	ELECT, CHIP 10uF 20% 16V

(DV-17 BOARD(For PAL); Suffix -11)

Ref. No. or Q'ty	Part No.	SP	Description	
C111	1-163-038-91	s	CERAMIC, CHIP 0.1uF 25V	
C112	1-163-038-91	s	CERAMIC, CHIP 0.1uF 25V	
C113	1-163-038-91	s	CERAMIC, CHIP 0.1uF 25V	
C114	1-163-038-91	s	CERAMIC, CHIP 0.1uF 25V	
C115	1-126-394-11	s	ELECT, CHIP 10uF 20% 16V	
C116	1-126-394-11	s	ELECT, CHIP 10uF 20% 16V	
C117	1-163-038-91	s	CERAMIC, CHIP 0.1uF 25V	
C118	1-163-038-91	s	CERAMIC, CHIP 0.1uF 25V	
C121	1-163-038-91	s	CERAMIC, CHIP 0.1uF 25V	
C123	1-163-038-91	s	CERAMIC, CHIP 0.1uF 25V	
C124	1-163-038-91	s	CERAMIC, CHIP 0.1uF 25V	
C125	1-163-038-91	s	CERAMIC, CHIP 0.1uF 25V	
C126	1-163-038-91	s	CERAMIC, CHIP 0.1uF 25V	
C127	1-163-038-91	s	CERAMIC, CHIP 0.1uF 25V	
C128	1-163-038-91	s	CERAMIC, CHIP 0.1uF 25V	
C129	1-126-396-11	s	ELECT, CHIP 47uF 20% 16V	
C130	1-163-038-91	s	CERAMIC, CHIP 0.1uF 25V	
C132	1-163-038-91	s	CERAMIC, CHIP 0.1uF 25V	
C133	1-163-038-91	s	CERAMIC, CHIP 0.1uF 25V	
C134	1-163-038-91	s	CERAMIC, CHIP 0.1uF 25V	
C135	1-163-038-91	s	CERAMIC, CHIP 0.1uF 25V	
C136	1-163-038-91	s	CERAMIC, CHIP 0.1uF 25V	
C137	1-163-038-91	s	CERAMIC, CHIP 0.1uF 25V	
C138	1-163-038-91	s	CERAMIC, CHIP 0.1uF 25V	
C139	1-163-038-91	s	CERAMIC, CHIP 0.1uF 25V	
C151	1-163-275-11	s	CERAMIC, CHIP 0.001uF 5% 50V	
C153	1-163-038-91	s	CERAMIC, CHIP 0.1uF 25V	
C154	1-126-394-11	s	ELECT, CHIP 10uF 20% 16V	
C155	1-163-038-91	s	CERAMIC, CHIP 0.1uF 25V	
C156	1-163-038-91	s	CERAMIC, CHIP 0.1uF 25V	
C157	1-163-038-91	s	CERAMIC, CHIP 0.1uF 25V	
C158	1-163-038-91	s	CERAMIC, CHIP 0.1uF 25V	
C159	1-163-038-91	s	CERAMIC, CHIP 0.1uF 25V	
C160	1-163-038-91	s	CERAMIC, CHIP 0.1uF 25V	
C161	1-163-038-91	s	CERAMIC, CHIP 0.1uF 25V	
C162	1-163-275-11	s	CERAMIC, CHIP 0.001uF 5% 50V	
C163	1-163-275-11	s	CERAMIC, CHIP 0.001uF 5% 50V	
C164	1-163-275-11	s	CERAMIC, CHIP 0.001uF 5% 50V	
C165	1-104-760-11	s	CERAMIC, CHIP 0.047uF 10% 50V	
C166	1-135-179-21	s	TANTALUM, CHIP 2.2uF 10% 16V	
C167	1-163-038-91	s	CERAMIC, CHIP 0.1uF 25V	
C168	1-163-038-91	s	CERAMIC, CHIP 0.1uF 25V	
C169	1-163-038-91	s	CERAMIC, CHIP 0.1uF 25V	
C170	1-163-038-91	s	CERAMIC, CHIP 0.1uF 25V	
C171	1-163-231-11	s	CERAMIC, CHIP 15pF 5% 50V	*1)
C201	1-163-038-91	s	CERAMIC, CHIP 0.1uF 25V	
C202	1-126-396-11	s	ELECT, CHIP 47uF 20% 16V	
C203	1-163-038-91	s	CERAMIC, CHIP 0.1uF 25V	
C204	1-163-038-91	s	CERAMIC, CHIP 0.1uF 25V	
C205	1-163-038-91	s	CERAMIC, CHIP 0.1uF 25V	
C206	1-163-038-91	s	CERAMIC, CHIP 0.1uF 25V	
C214	1-163-038-91	s	CERAMIC, CHIP 0.1uF 25V	
C218	1-163-038-91	s	CERAMIC, CHIP 0.1uF 25V	
C219	1-163-038-91	s	CERAMIC, CHIP 0.1uF 25V	
C220	1-163-038-91	s	CERAMIC, CHIP 0.1uF 25V	
C221	1-163-038-91	s	CERAMIC, CHIP 0.1uF 25V	
C222	1-163-038-91	s	CERAMIC, CHIP 0.1uF 25V	
C223	1-163-038-91	s	CERAMIC, CHIP 0.1uF 25V	
C224	1-163-038-91	s	CERAMIC, CHIP 0.1uF 25V	

(DV-17 BOARD(For PAL); Suffix -11)

Ref. No. or Q'ty	Part No.	SP	Description
C225	1-163-038-91	s	CERAMIC, CHIP 0.1uF 25V
C228	1-163-038-91	s	CERAMIC, CHIP 0.1uF 25V
C229	1-163-038-91	s	CERAMIC, CHIP 0.1uF 25V
C251	1-126-394-11	s	ELECT, CHIP 10uF 20% 16V
C252	1-163-038-91	s	CERAMIC, CHIP 0.1uF 25V
C253	1-163-038-91	s	CERAMIC, CHIP 0.1uF 25V
C254	1-163-038-91	s	CERAMIC, CHIP 0.1uF 25V
C255	1-163-038-91	s	CERAMIC, CHIP 0.1uF 25V
C256	1-163-038-91	s	CERAMIC, CHIP 0.1uF 25V
C257	1-163-038-91	s	CERAMIC, CHIP 0.1uF 25V
C258	1-163-038-91	s	CERAMIC, CHIP 0.1uF 25V
C259	1-163-038-91	s	CERAMIC, CHIP 0.1uF 25V
C260	1-163-038-91	s	CERAMIC, CHIP 0.1uF 25V
C261	1-163-038-91	s	CERAMIC, CHIP 0.1uF 25V
C262	1-163-038-91	s	CERAMIC, CHIP 0.1uF 25V
C263	1-163-038-91	s	CERAMIC, CHIP 0.1uF 25V
C264	1-163-038-91	s	CERAMIC, CHIP 0.1uF 25V
C265	1-163-038-91	s	CERAMIC, CHIP 0.1uF 25V
C266	1-163-038-91	s	CERAMIC, CHIP 0.1uF 25V
C267	1-163-038-91	s	CERAMIC, CHIP 0.1uF 25V
C268	1-163-038-91	s	CERAMIC, CHIP 0.1uF 25V
C269	1-163-038-91	s	CERAMIC, CHIP 0.1uF 25V
C270	1-163-038-91	s	CERAMIC, CHIP 0.1uF 25V
C271	1-163-038-91	s	CERAMIC, CHIP 0.1uF 25V
C272	1-163-038-91	s	CERAMIC, CHIP 0.1uF 25V
C301	1-163-038-91	s	CERAMIC, CHIP 0.1uF 25V
C302	1-163-038-91	s	CERAMIC, CHIP 0.1uF 25V
C303	1-163-038-91	s	CERAMIC, CHIP 0.1uF 25V
C304	1-163-038-91	s	CERAMIC, CHIP 0.1uF 25V
C305	1-163-038-91	s	CERAMIC, CHIP 0.1uF 25V
C306	1-163-038-91	s	CERAMIC, CHIP 0.1uF 25V
C307	1-163-038-91	s	CERAMIC, CHIP 0.1uF 25V
C308	1-163-038-91	s	CERAMIC, CHIP 0.1uF 25V
C309	1-163-038-91	s	CERAMIC, CHIP 0.1uF 25V
C310	1-163-038-91	s	CERAMIC, CHIP 0.1uF 25V
C311	1-163-038-91	s	CERAMIC, CHIP 0.1uF 25V
C312	1-163-038-91	s	CERAMIC, CHIP 0.1uF 25V
C313	1-126-394-11	s	ELECT, CHIP 10uF 20% 16V
C314	1-126-394-11	s	ELECT, CHIP 10uF 20% 16V
C315	1-163-038-91	s	CERAMIC, CHIP 0.1uF 25V
C316	1-163-038-91	s	CERAMIC, CHIP 0.1uF 25V
C317	1-163-038-91	s	CERAMIC, CHIP 0.1uF 25V
C318	1-163-038-91	s	CERAMIC, CHIP 0.1uF 25V
C319	1-163-038-91	s	CERAMIC, CHIP 0.1uF 25V
C320	1-164-346-11	s	CERAMIC, CHIP 1uF 16V
C321	1-164-346-11	s	CERAMIC, CHIP 1uF 16V
C322	1-163-038-91	s	CERAMIC, CHIP 0.1uF 25V
C323	1-163-038-91	s	CERAMIC, CHIP 0.1uF 25V
C324	1-163-038-91	s	CERAMIC, CHIP 0.1uF 25V
C325	1-163-038-91	s	CERAMIC, CHIP 0.1uF 25V
C326	1-163-038-91	s	CERAMIC, CHIP 0.1uF 25V
C327	1-163-038-91	s	CERAMIC, CHIP 0.1uF 25V
C328	1-163-038-91	s	CERAMIC, CHIP 0.1uF 25V
C329	1-163-038-91	s	CERAMIC, CHIP 0.1uF 25V
C330	1-163-038-91	s	CERAMIC, CHIP 0.1uF 25V
C331	1-163-251-11	s	CERAMIC, CHIP 100pF 5% 50V
C332	1-163-038-91	s	CERAMIC, CHIP 0.1uF 25V
C333	1-163-251-11	s	CERAMIC, CHIP 100pF 5% 50V
C334	1-163-038-91	s	CERAMIC, CHIP 0.1uF 25V

(DV-17 BOARD(For PAL); Suffix -11)

Ref. No. or Q'ty	Part No.	SP	Description
C335	1-163-038-91	s	CERAMIC, CHIP 0.1uF 25V
C336	1-163-275-11	s	CERAMIC, CHIP 0.001uF 5% 50V
C337	1-163-275-11	s	CERAMIC, CHIP 0.001uF 5% 50V
C338	1-163-275-11	s	CERAMIC, CHIP 0.001uF 5% 50V
C339	1-163-275-11	s	CERAMIC, CHIP 0.001uF 5% 50V
C340	1-163-038-91	s	CERAMIC, CHIP 0.1uF 25V
C341	1-163-038-91	s	CERAMIC, CHIP 0.1uF 25V
C342	1-163-038-91	s	CERAMIC, CHIP 0.1uF 25V
C343	1-163-038-91	s	CERAMIC, CHIP 0.1uF 25V
C344	1-163-038-91	s	CERAMIC, CHIP 0.1uF 25V
C345	1-163-038-91	s	CERAMIC, CHIP 0.1uF 25V
C346	1-163-038-91	s	CERAMIC, CHIP 0.1uF 25V
C347	1-163-038-91	s	CERAMIC, CHIP 0.1uF 25V
C351	1-163-038-91	s	CERAMIC, CHIP 0.1uF 25V
C353	1-163-038-91	s	CERAMIC, CHIP 0.1uF 25V
C354	1-163-038-91	s	CERAMIC, CHIP 0.1uF 25V
C355	1-163-038-91	s	CERAMIC, CHIP 0.1uF 25V
C356	1-163-038-91	s	CERAMIC, CHIP 0.1uF 25V
C357	1-163-038-91	s	CERAMIC, CHIP 0.1uF 25V
C358	1-163-038-91	s	CERAMIC, CHIP 0.1uF 25V
C359	1-163-038-91	s	CERAMIC, CHIP 0.1uF 25V
C360	1-163-038-91	s	CERAMIC, CHIP 0.1uF 25V
C361	1-163-038-91	s	CERAMIC, CHIP 0.1uF 25V
C362	1-163-038-91	s	CERAMIC, CHIP 0.1uF 25V
C363	1-163-038-91	s	CERAMIC, CHIP 0.1uF 25V
C364	1-126-394-11	s	ELECT, CHIP 10uF 20% 16V
C365	1-126-394-11	s	ELECT, CHIP 10uF 20% 16V
C366	1-163-038-91	s	CERAMIC, CHIP 0.1uF 25V
C367	1-163-038-91	s	CERAMIC, CHIP 0.1uF 25V
C368	1-163-038-91	s	CERAMIC, CHIP 0.1uF 25V
C369	1-163-038-91	s	CERAMIC, CHIP 0.1uF 25V
C370	1-163-038-91	s	CERAMIC, CHIP 0.1uF 25V
C371	1-163-038-91	s	CERAMIC, CHIP 0.1uF 25V
C372	1-163-038-91	s	CERAMIC, CHIP 0.1uF 25V
C373	1-163-038-91	s	CERAMIC, CHIP 0.1uF 25V
C374	1-126-394-11	s	ELECT, CHIP 10uF 20% 16V
C375	1-163-038-91	s	CERAMIC, CHIP 0.1uF 25V
C376	1-163-038-91	s	CERAMIC, CHIP 0.1uF 25V
C381	1-126-396-11	s	ELECT, CHIP 47uF 20% 16V
C382	1-126-396-11	s	ELECT, CHIP 47uF 20% 16V
C383	1-163-038-91	s	CERAMIC, CHIP 0.1uF 25V
C384	1-163-038-91	s	CERAMIC, CHIP 0.1uF 25V
C385	1-163-038-91	s	CERAMIC, CHIP 0.1uF 25V
C386	1-163-038-91	s	CERAMIC, CHIP 0.1uF 25V
C387	1-126-396-11	s	ELECT, CHIP 47uF 20% 16V
C388	1-163-038-91	s	CERAMIC, CHIP 0.1uF 25V
C389	1-163-038-91	s	CERAMIC, CHIP 0.1uF 25V
C390	1-126-396-11	s	ELECT, CHIP 47uF 20% 16V
C391	1-163-038-91	s	CERAMIC, CHIP 0.1uF 25V
C392	1-163-038-91	s	CERAMIC, CHIP 0.1uF 25V
C401	1-163-259-91	s	CERAMIC, CHIP 220pF 5% 50V
C402	1-163-259-91	s	CERAMIC, CHIP 220pF 5% 50V
C403	1-163-251-11	s	CERAMIC, CHIP 100pF 5% 50V
C404	1-163-251-11	s	CERAMIC, CHIP 100pF 5% 50V
C405	1-163-139-00	s	CERAMIC, CHIP 820pF 5% 50V
C406	1-163-251-11	s	CERAMIC, CHIP 100pF 5% 50V
C407	1-126-396-11	s	ELECT, CHIP 47uF 20% 16V
C408	1-163-251-11	s	CERAMIC, CHIP 100pF 5% 50V
C409	1-126-400-11	s	ELECT, CHIP 22uF 20% 35V

(DV-17 BOARD(For PAL); Suffix -11)

Ref. No. or Q'ty	Part No.	SP	Description
C410	1-126-400-11	s	ELECT, CHIP 22uF 20% 35V
C411	1-163-235-11	s	CERAMIC, CHIP 22pF 5% 50V
C412	1-163-235-11	s	CERAMIC, CHIP 22pF 5% 50V
C413	1-126-400-11	s	ELECT, CHIP 22uF 20% 35V
C414	1-163-251-11	s	CERAMIC, CHIP 100pF 5% 50V
C415	1-163-251-11	s	CERAMIC, CHIP 100pF 5% 50V
C417	1-126-400-11	s	ELECT, CHIP 22uF 20% 35V
C419	1-126-394-11	s	ELECT, CHIP 10uF 20% 16V
C420	1-126-394-11	s	ELECT, CHIP 10uF 20% 16V
C421	1-163-275-11	s	CERAMIC, CHIP 0.001uF 5% 50V
C422	1-163-038-91	s	CERAMIC, CHIP 0.1uF 25V
C423	1-163-038-91	s	CERAMIC, CHIP 0.1uF 25V
C424	1-163-038-91	s	CERAMIC, CHIP 0.1uF 25V
C501	1-163-259-91	s	CERAMIC, CHIP 220pF 5% 50V
C502	1-163-259-91	s	CERAMIC, CHIP 220pF 5% 50V
C503	1-163-251-11	s	CERAMIC, CHIP 100pF 5% 50V
C504	1-163-251-11	s	CERAMIC, CHIP 100pF 5% 50V
C505	1-163-139-00	s	CERAMIC, CHIP 820pF 5% 50V
C506	1-163-251-11	s	CERAMIC, CHIP 100pF 5% 50V
C507	1-126-396-11	s	ELECT, CHIP 47uF 20% 16V
C508	1-163-251-11	s	CERAMIC, CHIP 100pF 5% 50V
C509	1-126-400-11	s	ELECT, CHIP 22uF 20% 35V
C510	1-126-400-11	s	ELECT, CHIP 22uF 20% 35V
C511	1-163-235-11	s	CERAMIC, CHIP 22pF 5% 50V
C512	1-163-235-11	s	CERAMIC, CHIP 22pF 5% 50V
C513	1-126-400-11	s	ELECT, CHIP 22uF 20% 35V
C514	1-163-251-11	s	CERAMIC, CHIP 100pF 5% 50V
C515	1-163-251-11	s	CERAMIC, CHIP 100pF 5% 50V
C517	1-126-400-11	s	ELECT, CHIP 22uF 20% 35V
C519	1-163-275-11	s	CERAMIC, CHIP 0.001uF 5% 50V
C520	1-126-394-11	s	ELECT, CHIP 10uF 20% 16V
C521	1-126-394-11	s	ELECT, CHIP 10uF 20% 16V
C522	1-163-038-91	s	CERAMIC, CHIP 0.1uF 25V
C523	1-163-038-91	s	CERAMIC, CHIP 0.1uF 25V
C524	1-163-038-91	s	CERAMIC, CHIP 0.1uF 25V
C601	1-163-259-91	s	CERAMIC, CHIP 220pF 5% 50V
C602	1-163-259-91	s	CERAMIC, CHIP 220pF 5% 50V
C603	1-163-251-11	s	CERAMIC, CHIP 100pF 5% 50V
C604	1-163-251-11	s	CERAMIC, CHIP 100pF 5% 50V
C605	1-163-139-00	s	CERAMIC, CHIP 820pF 5% 50V
C606	1-163-251-11	s	CERAMIC, CHIP 100pF 5% 50V
C607	1-126-396-11	s	ELECT, CHIP 47uF 20% 16V
C608	1-163-251-11	s	CERAMIC, CHIP 100pF 5% 50V
C609	1-126-400-11	s	ELECT, CHIP 22uF 20% 35V
C610	1-126-400-11	s	ELECT, CHIP 22uF 20% 35V
C611	1-163-235-11	s	CERAMIC, CHIP 22pF 5% 50V
C612	1-163-235-11	s	CERAMIC, CHIP 22pF 5% 50V
C613	1-126-400-11	s	ELECT, CHIP 22uF 20% 35V
C614	1-163-251-11	s	CERAMIC, CHIP 100pF 5% 50V
C615	1-163-251-11	s	CERAMIC, CHIP 100pF 5% 50V
C617	1-126-400-11	s	ELECT, CHIP 22uF 20% 35V
C619	1-163-275-11	s	CERAMIC, CHIP 0.001uF 5% 50V
C620	1-126-394-11	s	ELECT, CHIP 10uF 20% 16V
C621	1-126-394-11	s	ELECT, CHIP 10uF 20% 16V
C622	1-163-038-91	s	CERAMIC, CHIP 0.1uF 25V
C623	1-163-038-91	s	CERAMIC, CHIP 0.1uF 25V
C624	1-163-038-91	s	CERAMIC, CHIP 0.1uF 25V
C701	1-163-259-91	s	CERAMIC, CHIP 220pF 5% 50V
C702	1-163-259-91	s	CERAMIC, CHIP 220pF 5% 50V

(DV-17 BOARD(For PAL); Suffix -11)

Ref. No. or Q'ty	Part No.	SP	Description
C703	1-163-251-11	s	CERAMIC, CHIP 100pF 5% 50V
C704	1-163-251-11	s	CERAMIC, CHIP 100pF 5% 50V
C705	1-163-139-00	s	CERAMIC, CHIP 820pF 5% 50V
C706	1-163-251-11	s	CERAMIC, CHIP 100pF 5% 50V
C707	1-126-396-11	s	ELECT, CHIP 47uF 20% 16V
C708	1-163-251-11	s	CERAMIC, CHIP 100pF 5% 50V
C709	1-126-400-11	s	ELECT, CHIP 22uF 20% 35V
C710	1-126-400-11	s	ELECT, CHIP 22uF 20% 35V
C711	1-163-235-11	s	CERAMIC, CHIP 22pF 5% 50V
C712	1-163-235-11	s	CERAMIC, CHIP 22pF 5% 50V
C713	1-126-400-11	s	ELECT, CHIP 22uF 20% 35V
C714	1-163-251-11	s	CERAMIC, CHIP 100pF 5% 50V
C715	1-163-251-11	s	CERAMIC, CHIP 100pF 5% 50V
C716	1-126-400-11	s	ELECT, CHIP 22uF 20% 35V
C719	1-163-275-11	s	CERAMIC, CHIP 0.001uF 5% 50V
C720	1-126-394-11	s	ELECT, CHIP 10uF 20% 16V
C721	1-126-394-11	s	ELECT, CHIP 10uF 20% 16V
C722	1-163-038-91	s	CERAMIC, CHIP 0.1uF 25V
C723	1-163-038-91	s	CERAMIC, CHIP 0.1uF 25V
C724	1-163-038-91	s	CERAMIC, CHIP 0.1uF 25V
CN1	1-774-392-11	o	CONNECTOR, BB 60P, FEMALE
D151	8-719-027-95	s	DIODE HSM88WK
D152	8-719-041-39	s	DIODE KV1470
D301	8-719-041-39	s	DIODE KV1470
D302	8-719-041-39	s	DIODE KV1470
D401	8-719-801-48	s	DIODE 1SS193
D402	8-719-820-41	s	DIODE 1SS302
D403	8-719-820-41	s	DIODE 1SS302
D501	8-719-801-48	s	DIODE 1SS193
D502	8-719-820-41	s	DIODE 1SS302
D503	8-719-820-41	s	DIODE 1SS302
D801	8-719-801-48	s	DIODE 1SS193
D803	8-719-820-41	s	DIODE 1SS302
D805	8-719-820-41	s	DIODE 1SS302
D808	8-719-801-48	s	DIODE 1SS193
D810	8-719-820-41	s	DIODE 1SS302
D812	8-719-820-41	s	DIODE 1SS302
E151	1-535-877-22	o	CHECKER CHIP
E251	1-535-877-22	o	CHECKER CHIP
E252	1-535-877-22	o	CHECKER CHIP
E301	1-535-877-22	o	CHECKER CHIP
FB101	1-233-674-11	s	FILTER BLOCK, NOISE, CHIP
FB102	1-233-674-11	s	FILTER BLOCK, NOISE, CHIP
FL201	1-233-314-11	s	FILTER, NOISE CHIP
IC10	8-759-300-71	s	IC HD14053BFP
IC11	8-759-009-06	s	IC MC14052BF
IC12	8-759-702-02	s	IC NJM062M
IC13	8-759-157-17	s	IC PQ05SZ1U
IC14	8-759-172-41	s	IC L78M09T-TL
IC15	8-759-068-03	s	IC NJM79L09UA
IC101	8-759-337-30	s	IC UPD482445LGW-B10-E2
IC102	8-759-385-90	s	IC CXD2187AR
IC103	8-759-079-87	s	IC TC74VHC245FS(EL)
IC104	8-759-079-87	s	IC TC74VHC245FS(EL)
IC105	8-759-167-20	s	IC UPD42280GU-30
IC106	8-759-167-20	s	IC UPD42280GU-30

(DV-17 BOARD(For PAL); Suffix -11)

Ref. No. or Q'ty	Part No.	SP	Description
IC107	8-759-186-77	s	IC TC74VHC541F
IC108	8-759-186-77	s	IC TC74VHC541F
IC121	8-759-328-28	s	IC ZA4024
IC122	8-759-426-26	s	IC CXD8608R
IC123	8-759-328-28	s	IC ZA4024
IC124	8-752-378-68	s	IC CXD3101R
IC125	8-759-327-31	s	IC CXD2183R
IC151	8-759-186-63	s	IC TC74VHC245F(EL)
IC152	8-752-375-05	s	IC CXD2191R-T6
IC153	8-759-186-63	s	IC TC74VHC245F(EL)
IC201	8-759-457-61	s	IC CXD8628BR
IC207	8-759-081-48	s	IC TC74VHC08F
IC209	8-759-186-51	s	IC TC74VHC157F
IC211	8-759-186-51	s	IC TC74VHC157F
IC212	8-759-186-63	s	IC TC74VHC245F(EL)
IC214	8-759-186-63	s	IC TC74VHC245F(EL)
IC252	8-759-337-74	s	IC HM62V256LT8Z
IC253	8-759-337-74	s	IC HM62V256LT8Z
IC301	8-752-374-96	s	IC CXD2190R-T6
IC302	8-752-374-96	s	IC CXD2190R-T6
IC303	8-759-337-74	s	IC HM62V256LT8Z
IC304	8-759-337-74	s	IC HM62V256LT8Z
IC305	8-759-079-46	s	IC TC74VHC00FS(EL)
IC308	8-759-362-16	s	IC CXD2913AQ
IC309	8-759-362-16	s	IC CXD2913AQ
IC310	8-759-702-02	s	IC NJM062M
IC311	8-759-702-02	s	IC NJM062M
IC351	8-759-927-18	s	IC SN74HCT541NS
IC352	8-759-335-02	s	IC TC74ACT157FS(EL)
IC353	8-752-352-30	s	IC CXD2705AQ
IC354	8-752-352-30	s	IC CXD2705AQ
IC355	8-759-335-55	s	IC MSM514256B-70JS11DR1
IC356	8-759-335-55	s	IC MSM514256B-70JS11DR1
IC357	8-759-326-71	s	IC CXD8517Q
IC358	8-759-326-71	s	IC CXD8517Q
IC359	8-759-079-46	s	IC TC74VHC00FS(EL)
IC360	8-759-079-61	s	IC TC74VHC74FS(EL)
IC361	8-759-079-61	s	IC TC74VHC74FS(EL)
IC381	8-759-173-51	s	IC SM5872AS-ET
IC382	8-759-173-51	s	IC SM5872AS-ET
IC401	8-759-745-64	s	IC NJM4560M
IC402	8-759-745-64	s	IC NJM4560M
IC403	8-759-745-64	s	IC NJM4560M
IC404	8-759-745-64	s	IC NJM4560M
IC405	8-759-521-14	s	IC NJM5532S-D
IC501	8-759-745-64	s	IC NJM4560M
IC503	8-759-745-64	s	IC NJM4560M
IC504	8-759-745-64	s	IC NJM4560M
IC505	8-759-521-14	s	IC NJM5532S-D
IC601	8-759-745-64	s	IC NJM4560M
IC602	8-759-702-02	s	IC NJM062M
IC603	8-759-702-02	s	IC NJM062M
IC604	8-759-702-02	s	IC NJM062M
IC605	8-759-521-14	s	IC NJM5532S-D
IC701	8-759-745-64	s	IC NJM4560M
IC703	8-759-702-02	s	IC NJM062M
IC704	8-759-702-02	s	IC NJM062M
IC705	8-759-521-14	s	IC NJM5532S-D

(DV-17 BOARD(For PAL); Suffix -11)

Ref. No. or Q'ty	Part No.	SP	Description	
L11	1-412-364-21	s	INDUCTOR, CHIP	
L101	1-410-740-31	s	INDUCTOR, CHIP 0.82uH	
L102	1-410-381-11	s	INDUCTOR, CHIP 10uH	*2)
	1-410-740-31	s	INDUCTOR, CHIP 0.82uH	*3)
L103	1-410-381-11	s	INDUCTOR, CHIP 10uH	
L104	1-410-381-11	s	INDUCTOR, CHIP 10uH	
L122	1-410-740-31	s	INDUCTOR, CHIP 0.82uH	
L151	1-410-381-11	s	INDUCTOR, CHIP 10uH	
L152	1-410-381-11	s	INDUCTOR, CHIP 10uH	
L153	1-410-381-11	s	INDUCTOR, CHIP 10uH	
L154	1-410-740-31	s	INDUCTOR, CHIP 0.82uH	
L201	1-410-740-31	s	INDUCTOR, CHIP 0.82uH	
L203	1-410-740-31	s	INDUCTOR, CHIP 0.82uH	
L204	1-410-381-11	s	INDUCTOR, CHIP 10uH	
L251	1-410-381-11	s	INDUCTOR, CHIP 10uH	
L301	1-410-381-11	s	INDUCTOR, CHIP 10uH	
L302	1-410-381-11	s	INDUCTOR, CHIP 10uH	
L303	1-410-381-11	s	INDUCTOR, CHIP 10uH	
L304	1-410-381-11	s	INDUCTOR, CHIP 10uH	
L305	1-410-381-11	s	INDUCTOR, CHIP 10uH	
L306	1-410-381-11	s	INDUCTOR, CHIP 10uH	
L307	1-410-381-11	s	INDUCTOR, CHIP 10uH	
L308	1-410-381-11	s	INDUCTOR, CHIP 10uH	
L309	1-410-381-11	s	INDUCTOR, CHIP 10uH	
L310	1-410-381-11	s	INDUCTOR, CHIP 10uH	
L311	1-410-740-31	s	INDUCTOR, CHIP 0.82uH	
L351	1-410-381-11	s	INDUCTOR, CHIP 10uH	
L352	1-410-381-11	s	INDUCTOR, CHIP 10uH	
L353	1-410-381-11	s	INDUCTOR, CHIP 10uH	
L354	1-410-381-11	s	INDUCTOR, CHIP 10uH	
L355	1-410-381-11	s	INDUCTOR, CHIP 10uH	
L356	1-410-381-11	s	INDUCTOR, CHIP 10uH	
L357	1-410-381-11	s	INDUCTOR, CHIP 10uH	
L381	1-410-381-11	s	INDUCTOR, CHIP 10uH	
L382	1-410-381-11	s	INDUCTOR, CHIP 10uH	
L383	1-410-381-11	s	INDUCTOR, CHIP 10uH	
L384	1-410-381-11	s	INDUCTOR, CHIP 10uH	
LV301	1-411-984-11	s	COIL, VAR, CHIP	
LV302	1-411-984-11	s	COIL, VAR, CHIP	
PS10	⚠ 1-576-124-11	s	LINK, IC, CHIP 1A	
PS11	⚠ 1-576-124-11	s	LINK, IC, CHIP 1A	
PS12	⚠ 1-576-124-11	s	LINK, IC, CHIP 1A	
PS13	⚠ 1-576-124-11	s	LINK, IC, CHIP 1A	
PS14	⚠ 1-576-124-11	s	LINK, IC, CHIP 1A	
PS15	⚠ 1-533-282-21	s	LINK, IC, CHIP 2A	
PS16	⚠ 1-576-124-11	s	LINK, IC, CHIP 1A	
PS17	⚠ 1-576-124-11	s	LINK, IC, CHIP 1A	
Q10	8-729-027-59	s	TRANSISTOR DTC144EKA-T146	
Q11	8-729-027-59	s	TRANSISTOR DTC144EKA-T146	
Q12	8-729-027-59	s	TRANSISTOR DTC144EKA-T146	
Q13	8-729-027-38	s	TRANSISTOR DTA144EKA-T146	
Q14	8-729-117-32	s	TRANSISTOR 2SC4177	
Q15	8-729-027-59	s	TRANSISTOR DTC144EKA-T146	
Q16	8-729-202-38	s	TRANSISTOR 2SC3326N	
Q17	8-729-202-38	s	TRANSISTOR 2SC3326N	
Q18	8-729-202-38	s	TRANSISTOR 2SC3326N	
Q19	8-729-027-38	s	TRANSISTOR DTA144EKA-T146	

(DV-17 BOARD(For PAL); Suffix -11)

Ref. No. or Q'ty	Part No.	SP	Description
Q381	8-729-027-59	s	TRANSISTOR DTC144EKA-T146
Q382	8-729-027-59	s	TRANSISTOR DTC144EKA-T146
Q383	8-729-027-59	s	TRANSISTOR DTC144EKA-T146
Q384	8-729-027-59	s	TRANSISTOR DTC144EKA-T146
Q385	8-729-027-59	s	TRANSISTOR DTC144EKA-T146
Q386	8-729-027-38	s	TRANSISTOR DTA144EKA-T146
Q387	8-729-027-38	s	TRANSISTOR DTA144EKA-T146
Q388	8-729-027-38	s	TRANSISTOR DTA144EKA-T146
Q389	8-729-027-38	s	TRANSISTOR DTA144EKA-T146
Q390	8-729-027-38	s	TRANSISTOR DTA144EKA-T146
Q401	8-729-202-38	s	TRANSISTOR 2SC3326N
Q402	8-729-202-38	s	TRANSISTOR 2SC3326N
Q403	8-729-202-38	s	TRANSISTOR 2SC3326N
Q404	8-729-202-38	s	TRANSISTOR 2SC3326N
Q405	8-729-202-38	s	TRANSISTOR 2SC3326N
Q501	8-729-202-38	s	TRANSISTOR 2SC3326N
Q502	8-729-202-38	s	TRANSISTOR 2SC3326N
Q503	8-729-202-38	s	TRANSISTOR 2SC3326N
Q504	8-729-202-38	s	TRANSISTOR 2SC3326N
Q505	8-729-202-38	s	TRANSISTOR 2SC3326N
Q601	8-729-202-38	s	TRANSISTOR 2SC3326N
Q602	8-729-202-38	s	TRANSISTOR 2SC3326N
Q603	8-729-202-38	s	TRANSISTOR 2SC3326N
Q604	8-729-202-38	s	TRANSISTOR 2SC3326N
Q605	8-729-202-38	s	TRANSISTOR 2SC3326N
Q701	8-729-202-38	s	TRANSISTOR 2SC3326N
Q702	8-729-202-38	s	TRANSISTOR 2SC3326N
Q703	8-729-202-38	s	TRANSISTOR 2SC3326N
Q704	8-729-202-38	s	TRANSISTOR 2SC3326N
Q705	8-729-202-38	s	TRANSISTOR 2SC3326N
R10	1-216-073-00	s	METAL, CHIP 10k 5% 1/10W
R11	1-216-073-00	s	METAL, CHIP 10k 5% 1/10W
R12	1-216-073-00	s	METAL, CHIP 10k 5% 1/10W
R13	1-216-057-00	s	METAL, CHIP 2.2k 5% 1/10W
R14	1-216-057-00	s	METAL, CHIP 2.2k 5% 1/10W
R15	1-216-025-91	s	METAL, CHIP 100 5% 1/10W
R16	1-216-081-00	s	METAL, CHIP 22k 5% 1/10W
R17	1-216-081-00	s	METAL, CHIP 22k 5% 1/10W
R18	1-216-025-91	s	METAL, CHIP 100 5% 1/10W
R20	1-216-057-00	s	METAL, CHIP 2.2k 5% 1/10W
R21	1-216-025-91	s	METAL, CHIP 100 5% 1/10W
R22	1-216-073-00	s	METAL, CHIP 10k 5% 1/10W
R23	1-216-073-00	s	METAL, CHIP 10k 5% 1/10W
R24	1-216-073-00	s	METAL, CHIP 10k 5% 1/10W
R25	1-216-073-00	s	METAL, CHIP 10k 5% 1/10W
R26	1-216-073-00	s	METAL, CHIP 10k 5% 1/10W
R27	1-216-073-00	s	METAL, CHIP 10k 5% 1/10W
R28	1-216-073-00	s	METAL, CHIP 10k 5% 1/10W
R29	1-216-073-00	s	METAL, CHIP 10k 5% 1/10W
R30	1-216-073-00	s	METAL, CHIP 10k 5% 1/10W
R31	1-216-073-00	s	METAL, CHIP 10k 5% 1/10W
R103	1-216-089-91	s	METAL, CHIP 47k 5% 1/10W
R104	1-216-089-91	s	METAL, CHIP 47k 5% 1/10W
R105	1-216-089-91	s	METAL, CHIP 47k 5% 1/10W
R109	1-216-089-91	s	METAL, CHIP 47k 5% 1/10W
R110	1-216-025-91	s	METAL, CHIP 100 5% 1/10W
R134	1-216-295-91	s	RES, CHIP 0
R151	1-216-025-91	s	METAL, CHIP 100 5% 1/10W
R152	1-216-295-91	s	RES, CHIP 0

(DV-17 BOARD(For PAL); Suffix -11)

Ref. No. or Q'ty	Part No.	SP	Description
R153	1-216-089-91	s	METAL, CHIP 47k 5% 1/10W
R154	1-216-025-91	s	METAL, CHIP 100 5% 1/10W
R155	1-216-025-91	s	METAL, CHIP 100 5% 1/10W
R156	1-216-025-91	s	METAL, CHIP 100 5% 1/10W
R157	1-216-129-00	s	METAL, CHIP 2.2M 5% 1/10W
R158	1-216-041-00	s	METAL, CHIP 470 5% 1/10W
R159	1-216-073-00	s	METAL, CHIP 10k 5% 1/10W
R160	1-216-073-00	s	METAL, CHIP 10k 5% 1/10W
R162	1-216-065-00	s	METAL, CHIP 4.7k 5% 1/10W
R163	1-216-025-91	s	METAL, CHIP 100 5% 1/10W
R167	1-216-025-91	s	METAL, CHIP 100 5% 1/10W
R168	1-216-025-91	s	METAL, CHIP 100 5% 1/10W
R169	1-216-025-91	s	METAL, CHIP 100 5% 1/10W
R170	1-216-025-91	s	METAL, CHIP 100 5% 1/10W
R171	1-216-295-91	s	RES, CHIP 0
R173	1-216-295-91	s	RES, CHIP 0
R205	1-216-025-91	s	METAL, CHIP 100 5% 1/10W
R206	1-216-295-91	s	RES, CHIP 0
R207	1-216-295-91	s	RES, CHIP 0
R208	1-216-295-91	s	RES, CHIP 0
R209	1-216-295-91	s	RES, CHIP 0
R210	1-216-295-91	s	RES, CHIP 0
R251	1-216-025-91	s	METAL, CHIP 100 5% 1/10W
R252	1-216-025-91	s	METAL, CHIP 100 5% 1/10W
R253	1-216-025-91	s	METAL, CHIP 100 5% 1/10W
R254	1-216-025-91	s	METAL, CHIP 100 5% 1/10W
R255	1-216-295-91	s	RES, CHIP 0
R256	1-216-295-91	s	RES, CHIP 0
R257	1-216-295-91	s	RES, CHIP 0
R258	1-216-295-91	s	RES, CHIP 0
R259	1-216-295-91	s	RES, CHIP 0
R260	1-216-295-91	s	RES, CHIP 0
R261	1-216-089-91	s	METAL, CHIP 47k 5% 1/10W
R262	1-216-089-91	s	METAL, CHIP 47k 5% 1/10W
R263	1-216-089-91	s	METAL, CHIP 47k 5% 1/10W
R264	1-216-089-91	s	METAL, CHIP 47k 5% 1/10W
R265	1-216-089-91	s	METAL, CHIP 47k 5% 1/10W
R266	1-216-089-91	s	METAL, CHIP 47k 5% 1/10W
R267	1-216-089-91	s	METAL, CHIP 47k 5% 1/10W
R268	1-216-089-91	s	METAL, CHIP 47k 5% 1/10W
R269	1-216-089-91	s	METAL, CHIP 47k 5% 1/10W
R270	1-216-295-91	s	RES, CHIP 0
R271	1-216-295-91	s	RES, CHIP 0
R272	1-216-295-91	s	RES, CHIP 0
R273	1-216-295-91	s	RES, CHIP 0
R274	1-216-295-91	s	RES, CHIP 0
R275	1-216-295-91	s	RES, CHIP 0
R276	1-216-295-91	s	RES, CHIP 0
R277	1-216-295-91	s	RES, CHIP 0
R278	1-216-295-91	s	RES, CHIP 0
R279	1-216-089-91	s	METAL, CHIP 47k 5% 1/10W
R280	1-216-089-91	s	METAL, CHIP 47k 5% 1/10W
R281	1-216-089-91	s	METAL, CHIP 47k 5% 1/10W
R282	1-216-089-91	s	METAL, CHIP 47k 5% 1/10W
R283	1-216-295-91	s	RES, CHIP 0
R301	1-216-295-91	s	RES, CHIP 0
R303	1-216-295-91	s	RES, CHIP 0
R308	1-216-073-00	s	METAL, CHIP 10k 5% 1/10W
R309	1-216-073-00	s	METAL, CHIP 10k 5% 1/10W

(DV-17 BOARD(For PAL); Suffix -11)

Ref. No. or Q'ty	Part No.	SP	Description
R310	1-216-097-91	s	METAL, CHIP 100k 5% 1/10W
R311	1-216-091-00	s	METAL, CHIP 56k 5% 1/10W
R312	1-216-097-91	s	METAL, CHIP 100k 5% 1/10W
R313	1-216-091-00	s	METAL, CHIP 56k 5% 1/10W
R314	1-216-089-91	s	METAL, CHIP 47k 5% 1/10W
R315	1-216-049-91	s	METAL, CHIP 1k 5% 1/10W
R316	1-216-089-91	s	METAL, CHIP 47k 5% 1/10W
R318	1-216-089-91	s	METAL, CHIP 47k 5% 1/10W
R319	1-216-077-00	s	METAL, CHIP 15k 5% 1/10W
R320	1-216-089-91	s	METAL, CHIP 47k 5% 1/10W
R321	1-216-089-91	s	METAL, CHIP 47k 5% 1/10W
R322	1-216-089-91	s	METAL, CHIP 47k 5% 1/10W
R323	1-216-089-91	s	METAL, CHIP 47k 5% 1/10W
R324	1-216-089-91	s	METAL, CHIP 47k 5% 1/10W
R325	1-216-089-91	s	METAL, CHIP 47k 5% 1/10W
*1) R326	1-216-089-91	s	METAL, CHIP 47k 5% 1/10W
R327	1-216-089-91	s	METAL, CHIP 47k 5% 1/10W
R328	1-216-073-00	s	METAL, CHIP 10k 5% 1/10W
R329	1-216-295-91	s	RES, CHIP 0
R330	1-216-025-91	s	METAL, CHIP 100 5% 1/10W
R331	1-216-089-91	s	METAL, CHIP 47k 5% 1/10W
R351	1-216-025-91	s	METAL, CHIP 100 5% 1/10W
R352	1-216-025-91	s	METAL, CHIP 100 5% 1/10W
R353	1-216-089-91	s	METAL, CHIP 47k 5% 1/10W
R354	1-216-089-91	s	METAL, CHIP 47k 5% 1/10W
R355	1-216-049-91	s	METAL, CHIP 1k 5% 1/10W
R381	1-216-049-91	s	METAL, CHIP 1k 5% 1/10W
R382	1-216-081-00	s	METAL, CHIP 22k 5% 1/10W
R383	1-216-081-00	s	METAL, CHIP 22k 5% 1/10W
R384	1-216-081-00	s	METAL, CHIP 22k 5% 1/10W
R385	1-216-081-00	s	METAL, CHIP 22k 5% 1/10W
R386	1-216-073-00	s	METAL, CHIP 10k 5% 1/10W
R401	1-216-675-11	s	METAL, CHIP 10k 0.5% 1/10W
R402	1-216-675-11	s	METAL, CHIP 10k 0.5% 1/10W
R403	1-216-675-11	s	METAL, CHIP 10k 0.5% 1/10W
R404	1-216-675-11	s	METAL, CHIP 10k 0.5% 1/10W
R405	1-216-683-11	s	METAL, CHIP 22k 0.5% 1/10W
R406	1-216-683-11	s	METAL, CHIP 22k 0.5% 1/10W
R407	1-216-677-11	s	METAL, CHIP 12k 0.5% 1/10W
R408	1-216-677-11	s	METAL, CHIP 12k 0.5% 1/10W
R409	1-216-683-11	s	METAL, CHIP 22k 0.5% 1/10W
R410	1-216-073-00	s	METAL, CHIP 10k 5% 1/10W
R411	1-216-683-11	s	METAL, CHIP 22k 0.5% 1/10W
R412	1-216-667-11	s	METAL, CHIP 4.7k 0.5% 1/10W
R413	1-216-674-11	s	METAL, CHIP 9.1k 0.5% 1/10W
R414	1-216-667-11	s	METAL, CHIP 4.7k 0.5% 1/10W
R415	1-216-073-00	s	METAL, CHIP 10k 5% 1/10W
R416	1-216-675-11	s	METAL, CHIP 10k 0.5% 1/10W
R417	1-216-073-00	s	METAL, CHIP 10k 5% 1/10W
R418	1-216-673-11	s	METAL, CHIP 8.2k 0.5% 1/10W
R419	1-216-674-11	s	METAL, CHIP 9.1k 0.5% 1/10W
R420	1-216-667-11	s	METAL, CHIP 4.7k 0.5% 1/10W
R421	1-216-073-00	s	METAL, CHIP 10k 5% 1/10W
R422	1-216-677-11	s	METAL, CHIP 12k 0.5% 1/10W
R423	1-216-667-11	s	METAL, CHIP 4.7k 0.5% 1/10W
R424	1-216-675-11	s	METAL, CHIP 10k 0.5% 1/10W
R425	1-216-675-11	s	METAL, CHIP 10k 0.5% 1/10W
R426	1-216-667-11	s	METAL, CHIP 4.7k 0.5% 1/10W
R427	1-216-667-11	s	METAL, CHIP 4.7k 0.5% 1/10W

(DV-17 BOARD(For PAL); Suffix -11)

Ref. No. or Q'ty	Part No.	SP	Description
R428	1-216-667-11	s	METAL, CHIP 4.7k 0.5% 1/10W
R429	1-216-667-11	s	METAL, CHIP 4.7k 0.5% 1/10W
R430	1-216-675-11	s	METAL, CHIP 10k 0.5% 1/10W
R431	1-216-675-11	s	METAL, CHIP 10k 0.5% 1/10W
R432	1-216-651-11	s	METAL, CHIP 1k 0.5% 1/10W
R433	1-216-675-11	s	METAL, CHIP 10k 0.5% 1/10W
R435	1-216-651-11	s	METAL, CHIP 1k 0.5% 1/10W
R437	1-216-619-11	s	METAL, CHIP 47 0.5% 1/10W
R438	1-216-699-11	s	METAL, CHIP 100k 0.5% 1/10W
R439	1-216-699-11	s	METAL, CHIP 100k 0.5% 1/10W
R440	1-216-675-11	s	METAL, CHIP 10k 0.5% 1/10W
R441	1-216-619-11	s	METAL, CHIP 47 0.5% 1/10W
R442	1-220-242-11	s	METAL, CHIP 22 5% 1/4W
R445	1-220-242-11	s	METAL, CHIP 22 5% 1/4W
R448	1-216-037-00	s	METAL, CHIP 330 5% 1/10W
R449	1-216-073-00	s	METAL, CHIP 10k 5% 1/10W
R501	1-216-675-11	s	METAL, CHIP 10k 0.5% 1/10W
R502	1-216-675-11	s	METAL, CHIP 10k 0.5% 1/10W
R503	1-216-675-11	s	METAL, CHIP 10k 0.5% 1/10W
R504	1-216-675-11	s	METAL, CHIP 10k 0.5% 1/10W
R505	1-216-683-11	s	METAL, CHIP 22k 0.5% 1/10W
R506	1-216-683-11	s	METAL, CHIP 22k 0.5% 1/10W
R507	1-216-677-11	s	METAL, CHIP 12k 0.5% 1/10W
R508	1-216-677-11	s	METAL, CHIP 12k 0.5% 1/10W
R509	1-216-683-11	s	METAL, CHIP 22k 0.5% 1/10W
R510	1-216-073-00	s	METAL, CHIP 10k 5% 1/10W
R511	1-216-683-11	s	METAL, CHIP 22k 0.5% 1/10W
R512	1-216-667-11	s	METAL, CHIP 4.7k 0.5% 1/10W
R513	1-216-674-11	s	METAL, CHIP 9.1k 0.5% 1/10W
R514	1-216-667-11	s	METAL, CHIP 4.7k 0.5% 1/10W
R515	1-216-073-00	s	METAL, CHIP 10k 5% 1/10W
R516	1-216-675-11	s	METAL, CHIP 10k 0.5% 1/10W
R517	1-216-073-00	s	METAL, CHIP 10k 5% 1/10W
R518	1-216-673-11	s	METAL, CHIP 8.2k 0.5% 1/10W
R519	1-216-674-11	s	METAL, CHIP 9.1k 0.5% 1/10W
R520	1-216-667-11	s	METAL, CHIP 4.7k 0.5% 1/10W
R521	1-216-073-00	s	METAL, CHIP 10k 5% 1/10W
R522	1-216-677-11	s	METAL, CHIP 12k 0.5% 1/10W
R523	1-216-667-11	s	METAL, CHIP 4.7k 0.5% 1/10W
R524	1-216-675-11	s	METAL, CHIP 10k 0.5% 1/10W
R525	1-216-675-11	s	METAL, CHIP 10k 0.5% 1/10W
R526	1-216-667-11	s	METAL, CHIP 4.7k 0.5% 1/10W
R527	1-216-667-11	s	METAL, CHIP 4.7k 0.5% 1/10W
R528	1-216-667-11	s	METAL, CHIP 4.7k 0.5% 1/10W
R529	1-216-667-11	s	METAL, CHIP 4.7k 0.5% 1/10W
R530	1-216-675-11	s	METAL, CHIP 10k 0.5% 1/10W
R531	1-216-675-11	s	METAL, CHIP 10k 0.5% 1/10W
R532	1-216-651-11	s	METAL, CHIP 1k 0.5% 1/10W
R533	1-216-675-11	s	METAL, CHIP 10k 0.5% 1/10W
R535	1-216-651-11	s	METAL, CHIP 1k 0.5% 1/10W
R537	1-216-619-11	s	METAL, CHIP 47 0.5% 1/10W
R538	1-216-699-11	s	METAL, CHIP 100k 0.5% 1/10W
R539	1-216-699-11	s	METAL, CHIP 100k 0.5% 1/10W
R540	1-216-675-11	s	METAL, CHIP 10k 0.5% 1/10W
R541	1-216-619-11	s	METAL, CHIP 47 0.5% 1/10W
R544	1-220-242-11	s	METAL, CHIP 22 5% 1/4W
R547	1-220-242-11	s	METAL, CHIP 22 5% 1/4W
R548	1-216-037-00	s	METAL, CHIP 330 5% 1/10W
R549	1-216-073-00	s	METAL, CHIP 10k 5% 1/10W

(DV-17 BOARD(For PAL); Suffix -11)

Ref. No. or Q'ty	Part No.	SP	Description
R601	1-216-675-11	s	METAL, CHIP 10k 0.5% 1/10W
R602	1-216-675-11	s	METAL, CHIP 10k 0.5% 1/10W
R603	1-216-675-11	s	METAL, CHIP 10k 0.5% 1/10W
R604	1-216-675-11	s	METAL, CHIP 10k 0.5% 1/10W
R605	1-216-683-11	s	METAL, CHIP 22k 0.5% 1/10W
R606	1-216-683-11	s	METAL, CHIP 22k 0.5% 1/10W
R607	1-216-677-11	s	METAL, CHIP 12k 0.5% 1/10W
R608	1-216-677-11	s	METAL, CHIP 12k 0.5% 1/10W
R609	1-216-683-11	s	METAL, CHIP 22k 0.5% 1/10W
R610	1-216-073-00	s	METAL, CHIP 10k 5% 1/10W
R611	1-216-683-11	s	METAL, CHIP 22k 0.5% 1/10W
R612	1-216-667-11	s	METAL, CHIP 4.7k 0.5% 1/10W
R613	1-216-674-11	s	METAL, CHIP 9.1k 0.5% 1/10W
R614	1-216-667-11	s	METAL, CHIP 4.7k 0.5% 1/10W
R615	1-216-073-00	s	METAL, CHIP 10k 5% 1/10W
R616	1-216-675-11	s	METAL, CHIP 10k 0.5% 1/10W
R617	1-216-073-00	s	METAL, CHIP 10k 5% 1/10W
R618	1-216-673-11	s	METAL, CHIP 8.2k 0.5% 1/10W
R619	1-216-674-11	s	METAL, CHIP 9.1k 0.5% 1/10W
R620	1-216-667-11	s	METAL, CHIP 4.7k 0.5% 1/10W
R621	1-216-073-00	s	METAL, CHIP 10k 5% 1/10W
R622	1-216-677-11	s	METAL, CHIP 12k 0.5% 1/10W
R623	1-216-667-11	s	METAL, CHIP 4.7k 0.5% 1/10W
R624	1-216-675-11	s	METAL, CHIP 10k 0.5% 1/10W
R625	1-216-675-11	s	METAL, CHIP 10k 0.5% 1/10W
R626	1-216-667-11	s	METAL, CHIP 4.7k 0.5% 1/10W
R627	1-216-667-11	s	METAL, CHIP 4.7k 0.5% 1/10W
R628	1-216-667-11	s	METAL, CHIP 4.7k 0.5% 1/10W
R629	1-216-667-11	s	METAL, CHIP 4.7k 0.5% 1/10W
R630	1-216-675-11	s	METAL, CHIP 10k 0.5% 1/10W
R631	1-216-675-11	s	METAL, CHIP 10k 0.5% 1/10W
R632	1-216-651-11	s	METAL, CHIP 1k 0.5% 1/10W
R633	1-216-675-11	s	METAL, CHIP 10k 0.5% 1/10W
R635	1-216-651-11	s	METAL, CHIP 1k 0.5% 1/10W
R637	1-216-619-11	s	METAL, CHIP 47 0.5% 1/10W
R638	1-216-699-11	s	METAL, CHIP 100k 0.5% 1/10W
R639	1-216-699-11	s	METAL, CHIP 100k 0.5% 1/10W
R640	1-216-675-11	s	METAL, CHIP 10k 0.5% 1/10W
R641	1-216-619-11	s	METAL, CHIP 47 0.5% 1/10W
R644	1-220-242-11	s	METAL, CHIP 22 5% 1/4W
R645	1-220-242-11	s	METAL, CHIP 22 5% 1/4W
R648	1-216-037-00	s	METAL, CHIP 330 5% 1/10W
R649	1-216-073-00	s	METAL, CHIP 10k 5% 1/10W
R701	1-216-675-11	s	METAL, CHIP 10k 0.5% 1/10W
R702	1-216-675-11	s	METAL, CHIP 10k 0.5% 1/10W
R703	1-216-675-11	s	METAL, CHIP 10k 0.5% 1/10W
R704	1-216-675-11	s	METAL, CHIP 10k 0.5% 1/10W
R705	1-216-683-11	s	METAL, CHIP 22k 0.5% 1/10W
R706	1-216-683-11	s	METAL, CHIP 22k 0.5% 1/10W
R707	1-216-677-11	s	METAL, CHIP 12k 0.5% 1/10W
R708	1-216-677-11	s	METAL, CHIP 12k 0.5% 1/10W
R709	1-216-683-11	s	METAL, CHIP 22k 0.5% 1/10W
R710	1-216-073-00	s	METAL, CHIP 10k 5% 1/10W
R711	1-216-683-11	s	METAL, CHIP 22k 0.5% 1/10W
R712	1-216-667-11	s	METAL, CHIP 4.7k 0.5% 1/10W
R713	1-216-674-11	s	METAL, CHIP 9.1k 0.5% 1/10W
R714	1-216-667-11	s	METAL, CHIP 4.7k 0.5% 1/10W
R715	1-216-073-00	s	METAL, CHIP 10k 5% 1/10W
R716	1-216-675-11	s	METAL, CHIP 10k 0.5% 1/10W

(DV-17 BOARD(For PAL); Suffix -11)

Ref. No. or Q'ty	Part No.	SP	Description
R717	1-216-073-00	s	METAL, CHIP 10k 5% 1/10W
R718	1-216-673-11	s	METAL, CHIP 8.2k 0.5% 1/10W
R719	1-216-674-11	s	METAL, CHIP 9.1k 0.5% 1/10W
R720	1-216-667-11	s	METAL, CHIP 4.7k 0.5% 1/10W
R721	1-216-073-00	s	METAL, CHIP 10k 5% 1/10W
R722	1-216-677-11	s	METAL, CHIP 12k 0.5% 1/10W
R723	1-216-667-11	s	METAL, CHIP 4.7k 0.5% 1/10W
R724	1-216-675-11	s	METAL, CHIP 10k 0.5% 1/10W
R725	1-216-675-11	s	METAL, CHIP 10k 0.5% 1/10W
R726	1-216-667-11	s	METAL, CHIP 4.7k 0.5% 1/10W
R727	1-216-667-11	s	METAL, CHIP 4.7k 0.5% 1/10W
R728	1-216-667-11	s	METAL, CHIP 4.7k 0.5% 1/10W
R729	1-216-667-11	s	METAL, CHIP 4.7k 0.5% 1/10W
R730	1-216-675-11	s	METAL, CHIP 10k 0.5% 1/10W
R731	1-216-675-11	s	METAL, CHIP 10k 0.5% 1/10W
R732	1-216-651-11	s	METAL, CHIP 1k 0.5% 1/10W
R733	1-216-675-11	s	METAL, CHIP 10k 0.5% 1/10W
R735	1-216-651-11	s	METAL, CHIP 1k 0.5% 1/10W
R737	1-216-619-11	s	METAL, CHIP 47 0.5% 1/10W
R738	1-216-699-11	s	METAL, CHIP 100k 0.5% 1/10W
R739	1-216-699-11	s	METAL, CHIP 100k 0.5% 1/10W
R740	1-216-675-11	s	METAL, CHIP 10k 0.5% 1/10W
R741	1-216-619-11	s	METAL, CHIP 47 0.5% 1/10W
R742	1-220-242-11	s	METAL, CHIP 22 5% 1/4W
R747	1-220-242-11	s	METAL, CHIP 22 5% 1/4W
R748	1-216-037-00	s	METAL, CHIP 330 5% 1/10W
R749	1-216-073-00	s	METAL, CHIP 10k 5% 1/10W
RB101	1-239-998-11	s	RESISTOR BLOCK, CHIP 100 x 4
RB102	1-239-998-11	s	RESISTOR BLOCK, CHIP 100 x 4
RB103	1-239-998-11	s	RESISTOR BLOCK, CHIP 100 x 4
RB104	1-239-998-11	s	RESISTOR BLOCK, CHIP 100 x 4
RB105	1-239-308-11	s	RESISTOR BLOCK, CHIP 47k x 8
RB107	1-239-998-11	s	RESISTOR BLOCK, CHIP 100 x 4
RB108	1-239-998-11	s	RESISTOR BLOCK, CHIP 100 x 4
RB109	1-239-998-11	s	RESISTOR BLOCK, CHIP 100 x 4
RB151	1-239-998-11	s	RESISTOR BLOCK, CHIP 100 x 4
RB153	1-239-998-11	s	RESISTOR BLOCK, CHIP 100 x 4
RB154	1-239-998-11	s	RESISTOR BLOCK, CHIP 100 x 4
RB201	1-239-998-11	s	RESISTOR BLOCK, CHIP 100 x 4
RB202	1-239-998-11	s	RESISTOR BLOCK, CHIP 100 x 4
RB203	1-239-998-11	s	RESISTOR BLOCK, CHIP 100 x 4
RB204	1-239-998-11	s	RESISTOR BLOCK, CHIP 100 x 4
RB205	1-239-998-11	s	RESISTOR BLOCK, CHIP 100 x 4
RB206	1-239-998-11	s	RESISTOR BLOCK, CHIP 100 x 4
RB251	1-239-998-11	s	RESISTOR BLOCK, CHIP 100 x 4
RB252	1-239-308-11	s	RESISTOR BLOCK, CHIP 47k x 8
RB301	1-239-308-11	s	RESISTOR BLOCK, CHIP 47k x 8
RB302	1-239-998-11	s	RESISTOR BLOCK, CHIP 100 x 4
RB303	1-239-998-11	s	RESISTOR BLOCK, CHIP 100 x 4
RB304	1-239-998-11	s	RESISTOR BLOCK, CHIP 100 x 4
RB305	1-239-998-11	s	RESISTOR BLOCK, CHIP 100 x 4
RB351	1-239-998-11	s	RESISTOR BLOCK, CHIP 100 x 4
RV401	1-241-264-11	s	RES, ADJ, METAL 10k
RV501	1-241-264-11	s	RES, ADJ, METAL 10k
RV601	1-241-264-11	s	RES, ADJ, METAL 10k
RV701	1-241-264-11	s	RES, ADJ, METAL 10k
RY401	1-515-716-11	s	RELAY
RY501	1-515-716-11	s	RELAY

(DV-17 BOARD(For PAL); Suffix -11)

Ref. No. or Q'ty	Part No.	SP	Description
RY601	1-515-716-11	s	RELAY
RY701	1-515-716-11	s	RELAY
TP301	1-535-877-22	o	CHECKER, CHIP
TP302	1-535-877-22	o	CHECKER, CHIP

FP-75 BOARD

Ref. No. or Q'ty	Part No.	SP	Description
1pc	A-8277-913-A	o	MOUNTED CIRCUIT BOARD, FP-75
C1	1-163-037-11	s	CERAMIC, CHIP 0.022uF 10% 25V
CN724	1-573-397-11	s	CONNECTOR, FPC 11P
D1	8-719-024-81	s	DIODE 1SS300-TE85L
D2	8-719-024-81	s	DIODE 1SS300-TE85L
D3	8-719-024-81	s	DIODE 1SS300-TE85L
D4	8-719-024-81	s	DIODE 1SS300-TE85L
D5	8-719-024-81	s	DIODE 1SS300-TE85L
R1	1-216-057-00	s	METAL, CHIP 2.2k 5% 1/10W
R2	1-216-057-00	s	METAL, CHIP 2.2k 5% 1/10W
RV1	1-237-695-11	s	RES, VAR CARBON 5k
RV2	1-237-695-11	s	RES, VAR CARBON 5k
S1	1-571-977-11	s	SWITCH, PUSH
S2	1-571-977-11	s	SWITCH, PUSH
S3	1-571-977-11	s	SWITCH, PUSH
S4	1-571-977-11	s	SWITCH, PUSH
S5	1-571-977-11	s	SWITCH, PUSH
S6	1-571-977-11	s	SWITCH, PUSH
S7	1-571-977-11	s	SWITCH, PUSH
S8	1-571-977-11	s	SWITCH, PUSH
S9	1-762-234-11	s	SWITCH, SLIDE
S10	1-571-640-11	s	SWITCH, SLIDE

HP-73BOARD

Ref. No. or Q'ty	Part No.	SP	Description
1pc	A-8277-912-A	o	MOUNTED CIRCUIT BOARD, HP-73
CN731	1-506-477-11	s	CONNECTOR 12P, MALE
CN733	1-506-468-11	s	CONNECTOR 3P, MALE
JW1	1-219-202-11	s	RES 0

IO-149 BOARD(For NTSC); Suffix -14

This list corresponds to the board suffix number -14.

Ref. No. or Q'ty	Part No.	SP	Description
1pc	A-8312-954-A	s	MOUNTED CIRCUIT BOARD, IO-149B
1pc	7-621-759-45	s	+PSW, 2.6x6
1pc	3-179-085-01	s	LEVER (L), PRINTED CIRCUIT BOARD
1pc	3-179-084-01	s	LEVER (R), PRINTED CIRCUIT BOARD
C1	1-126-392-11	s	ELECT, CHIP 100uF 20% 6.3V
C2	1-163-038-91	s	CERAMIC, CHIP 0.1uF 25V
C3	1-126-392-11	s	ELECT, CHIP 100uF 20% 6.3V
C4	1-163-038-91	s	CERAMIC, CHIP 0.1uF 25V
C5	1-126-392-11	s	ELECT, CHIP 100uF 20% 6.3V
C6	1-163-038-91	s	CERAMIC, CHIP 0.1uF 25V
C11	1-126-396-11	s	ELECT, CHIP 47uF 20% 16V
C12	1-163-038-91	s	CERAMIC, CHIP 0.1uF 25V
C13	1-126-396-11	s	ELECT, CHIP 47uF 20% 16V
C14	1-163-038-91	s	CERAMIC, CHIP 0.1uF 25V
C15	1-126-396-11	s	ELECT, CHIP 47uF 20% 16V
C16	1-163-038-91	s	CERAMIC, CHIP 0.1uF 25V
C21	1-126-396-11	s	ELECT, CHIP 47uF 20% 16V
C22	1-163-038-91	s	CERAMIC, CHIP 0.1uF 25V
C23	1-126-396-11	s	ELECT, CHIP 47uF 20% 16V
C24	1-163-038-91	s	CERAMIC, CHIP 0.1uF 25V
C25	1-126-396-11	s	ELECT, CHIP 47uF 20% 16V
C26	1-163-038-91	s	CERAMIC, CHIP 0.1uF 25V
C31	1-126-396-11	s	ELECT, CHIP 47uF 20% 16V
C32	1-163-038-91	s	CERAMIC, CHIP 0.1uF 25V
C33	1-126-396-11	s	ELECT, CHIP 47uF 20% 16V
C34	1-163-038-91	s	CERAMIC, CHIP 0.1uF 25V
C35	1-126-396-11	s	ELECT, CHIP 47uF 20% 16V
C36	1-163-038-91	s	CERAMIC, CHIP 0.1uF 25V
C37	1-126-396-11	s	ELECT, CHIP 47uF 20% 16V
C38	1-163-038-91	s	CERAMIC, CHIP 0.1uF 25V
C39	1-126-396-11	s	ELECT, CHIP 47uF 20% 16V
C40	1-163-038-91	s	CERAMIC, CHIP 0.1uF 25V
C101	1-164-004-11	s	CERAMIC, CHIP 0.1uF 10% 25V
C102	1-163-037-11	s	CERAMIC, CHIP 0.022uF 10% 25V
C103	1-126-396-11	s	ELECT, CHIP 47uF 20% 16V
C104	1-163-037-11	s	CERAMIC, CHIP 0.022uF 10% 25V
C105	1-163-037-11	s	CERAMIC, CHIP 0.022uF 10% 25V
C106	1-163-037-11	s	CERAMIC, CHIP 0.022uF 10% 25V
C107	1-163-037-11	s	CERAMIC, CHIP 0.022uF 10% 25V
C108	1-163-235-11	s	CERAMIC, CHIP 22pF 5% 50V
C109	1-163-037-11	s	CERAMIC, CHIP 0.022uF 10% 25V
C110	1-164-004-11	s	CERAMIC, CHIP 0.1uF 10% 25V
C111	1-164-004-11	s	CERAMIC, CHIP 0.1uF 10% 25V
C112	1-163-275-11	s	CERAMIC, CHIP 0.001uF 5% 50V
C113	1-163-275-11	s	CERAMIC, CHIP 0.001uF 5% 50V
C114	1-164-004-11	s	CERAMIC, CHIP 0.1uF 10% 25V
C115	1-164-004-11	s	CERAMIC, CHIP 0.1uF 10% 25V
C116	1-163-275-11	s	CERAMIC, CHIP 0.001uF 5% 50V
C117	1-163-275-11	s	CERAMIC, CHIP 0.001uF 5% 50V
C118	1-163-237-11	s	CERAMIC, CHIP 27pF 5% 50V
C119	1-163-237-11	s	CERAMIC, CHIP 27pF 5% 50V
C120	1-163-037-11	s	CERAMIC, CHIP 0.022uF 10% 25V
C121	1-163-037-11	s	CERAMIC, CHIP 0.022uF 10% 25V
C122	1-163-037-11	s	CERAMIC, CHIP 0.022uF 10% 25V
C123	1-164-004-11	s	CERAMIC, CHIP 0.1uF 10% 25V
C124	1-163-037-11	s	CERAMIC, CHIP 0.022uF 10% 25V

(IO-149 BOARD(For NTSC); Suffix -14)

Ref. No. or Q'ty	Part No.	SP	Description
C125	1-126-392-11	s	ELECT, CHIP 100uF 20% 6.3V
C126	1-163-275-11	s	CERAMIC, CHIP 0.001uF 5% 50V
C127	1-164-004-11	s	CERAMIC, CHIP 0.1uF 10% 25V
C128	1-163-037-11	s	CERAMIC, CHIP 0.022uF 10% 25V
C129	1-163-037-11	s	CERAMIC, CHIP 0.022uF 10% 25V
C130	1-163-275-11	s	CERAMIC, CHIP 0.001uF 5% 50V
C131	1-163-037-11	s	CERAMIC, CHIP 0.022uF 10% 25V
C132	1-163-037-11	s	CERAMIC, CHIP 0.022uF 10% 25V
C133	1-163-237-11	s	CERAMIC, CHIP 27pF 5% 50V
C134	1-126-394-11	s	ELECT, CHIP 10uF 20% 16V
C135	1-126-394-11	s	ELECT, CHIP 10uF 20% 16V
C136	1-163-037-11	s	CERAMIC, CHIP 0.022uF 10% 25V
C137	1-163-037-11	s	CERAMIC, CHIP 0.022uF 10% 25V
C138	1-163-037-11	s	CERAMIC, CHIP 0.022uF 10% 25V
C139	1-163-037-11	s	CERAMIC, CHIP 0.022uF 10% 25V
C140	1-163-037-11	s	CERAMIC, CHIP 0.022uF 10% 25V
C141	1-163-037-11	s	CERAMIC, CHIP 0.022uF 10% 25V
C142	1-126-392-11	s	ELECT, CHIP 100uF 20% 6.3V
C143	1-126-392-11	s	ELECT, CHIP 100uF 20% 6.3V
C144	1-163-037-11	s	CERAMIC, CHIP 0.022uF 10% 25V
C145	1-163-037-11	s	CERAMIC, CHIP 0.022uF 10% 25V
C146	1-163-037-11	s	CERAMIC, CHIP 0.022uF 10% 25V
C147	1-163-037-11	s	CERAMIC, CHIP 0.022uF 10% 25V
C148	1-163-037-11	s	CERAMIC, CHIP 0.022uF 10% 25V
C149	1-163-037-11	s	CERAMIC, CHIP 0.022uF 10% 25V
C150	1-163-037-11	s	CERAMIC, CHIP 0.022uF 10% 25V
C151	1-163-037-11	s	CERAMIC, CHIP 0.022uF 10% 25V
C152	1-163-037-11	s	CERAMIC, CHIP 0.022uF 10% 25V
C153	1-126-391-11	s	ELECT, CHIP 47uF 20% 6.3V
C154	1-163-231-11	s	CERAMIC, CHIP 15pF 5% 50V
C155	1-163-037-11	s	CERAMIC, CHIP 0.022uF 10% 25V
C156	1-163-038-91	s	CERAMIC, CHIP 0.1uF 25V
C157	1-163-037-11	s	CERAMIC, CHIP 0.022uF 10% 25V
C158	1-163-037-11	s	CERAMIC, CHIP 0.022uF 10% 25V
C159	1-163-038-91	s	CERAMIC, CHIP 0.1uF 25V
C160	1-163-037-11	s	CERAMIC, CHIP 0.022uF 10% 25V
C161	1-163-037-11	s	CERAMIC, CHIP 0.022uF 10% 25V
C162	1-163-038-91	s	CERAMIC, CHIP 0.1uF 25V
C163	1-163-038-91	s	CERAMIC, CHIP 0.1uF 25V
C164	1-163-038-91	s	CERAMIC, CHIP 0.1uF 25V
C165	1-126-391-11	s	ELECT, CHIP 47uF 20% 6.3V
C166	1-163-037-11	s	CERAMIC, CHIP 0.022uF 10% 25V
C167	1-126-391-11	s	ELECT, CHIP 47uF 20% 6.3V
C168	1-163-037-11	s	CERAMIC, CHIP 0.022uF 10% 25V
C169	1-163-037-11	s	CERAMIC, CHIP 0.022uF 10% 25V
C170	1-163-037-11	s	CERAMIC, CHIP 0.022uF 10% 25V
C171	1-126-391-11	s	ELECT, CHIP 47uF 20% 6.3V
C172	1-126-396-11	s	ELECT, CHIP 47uF 20% 16V
C173	1-126-396-11	s	ELECT, CHIP 47uF 20% 16V
C174	1-126-391-11	s	ELECT, CHIP 47uF 20% 6.3V
C175	1-126-391-11	s	ELECT, CHIP 47uF 20% 6.3V
C176	1-126-391-11	s	ELECT, CHIP 47uF 20% 6.3V
C177	1-126-391-11	s	ELECT, CHIP 47uF 20% 6.3V
C178	1-126-391-11	s	ELECT, CHIP 47uF 20% 6.3V
C179	1-163-037-11	s	CERAMIC, CHIP 0.022uF 10% 25V
C180	1-163-037-11	s	CERAMIC, CHIP 0.022uF 10% 25V
C181	1-163-037-11	s	CERAMIC, CHIP 0.022uF 10% 25V
C182	1-163-037-11	s	CERAMIC, CHIP 0.022uF 10% 25V
C183	1-163-037-11	s	CERAMIC, CHIP 0.022uF 10% 25V

(IO-149 BOARD(For NTSC); Suffix -14)

Ref. No. or Q'ty	Part No.	SP	Description
C184	1-163-037-11	s	CERAMIC, CHIP 0.022uF 10% 25V
C185	1-163-037-11	s	CERAMIC, CHIP 0.022uF 10% 25V
C186	1-163-037-11	s	CERAMIC, CHIP 0.022uF 10% 25V
C187	1-163-037-11	s	CERAMIC, CHIP 0.022uF 10% 25V
C188	1-163-235-11	s	CERAMIC, CHIP 22pF 5% 50V
C189	1-163-235-11	s	CERAMIC, CHIP 22pF 5% 50V
C190	1-163-099-00	s	CERAMIC, CHIP 18pF 5% 50V
C191	1-163-037-11	s	CERAMIC, CHIP 0.022uF 10% 25V
C192	1-163-037-11	s	CERAMIC, CHIP 0.022uF 10% 25V
C193	1-163-037-11	s	CERAMIC, CHIP 0.022uF 10% 25V
C194	1-126-401-11	s	ELECT, CHIP 1uF 20% 50V
C195	1-126-401-11	s	ELECT, CHIP 1uF 20% 50V
C196	1-126-394-11	s	ELECT, CHIP 10uF 20% 16V
C197	1-126-401-11	s	ELECT, CHIP 1uF 20% 50V
C198	1-126-394-11	s	ELECT, CHIP 10uF 20% 16V
C199	1-163-038-91	s	CERAMIC, CHIP 0.1uF 25V
C200	1-126-401-11	s	ELECT, CHIP 1uF 20% 50V
C201	1-163-038-91	s	CERAMIC, CHIP 0.1uF 25V
C202	1-163-809-11	s	CERAMIC, CHIP 0.047uF 10% 25V
C203	1-163-809-11	s	CERAMIC, CHIP 0.047uF 10% 25V
C204	1-163-809-11	s	CERAMIC, CHIP 0.047uF 10% 25V
C205	1-163-227-11	s	CERAMIC, CHIP 10pF 5% 50V
C206	1-163-037-11	s	CERAMIC, CHIP 0.022uF 10% 25V
C207	1-163-037-11	s	CERAMIC, CHIP 0.022uF 10% 25V
C208	1-163-037-11	s	CERAMIC, CHIP 0.022uF 10% 25V
C209	1-163-037-11	s	CERAMIC, CHIP 0.022uF 10% 25V
C210	1-163-037-11	s	CERAMIC, CHIP 0.022uF 10% 25V
C211	1-126-396-11	s	ELECT, CHIP 47uF 20% 16V
C212	1-163-037-11	s	CERAMIC, CHIP 0.022uF 10% 25V
C213	1-163-235-11	s	CERAMIC, CHIP 22pF 5% 50V
C214	1-163-037-11	s	CERAMIC, CHIP 0.022uF 10% 25V
C215	1-126-396-11	s	ELECT, CHIP 47uF 20% 16V
C216	1-163-037-11	s	CERAMIC, CHIP 0.022uF 10% 25V
C217	1-126-390-11	s	ELECT, CHIP 22uF 20% 6.3V
C218	1-163-037-11	s	CERAMIC, CHIP 0.022uF 10% 25V
C219	1-163-037-11	s	CERAMIC, CHIP 0.022uF 10% 25V
C220	1-163-249-11	s	CERAMIC, CHIP 82pF 5% 50V
C221	1-163-243-11	s	CERAMIC, CHIP 47pF 5% 50V
C222	1-163-227-11	s	CERAMIC, CHIP 10pF 5% 50V
C223	1-163-118-00	s	CERAMIC, CHIP 110pF 5% 50V
C224	1-163-037-11	s	CERAMIC, CHIP 0.022uF 10% 25V
C225	1-163-224-11	s	CERAMIC, CHIP 7pF 0.25pF 50V
C226	1-163-037-11	s	CERAMIC, CHIP 0.022uF 10% 25V
C228	1-163-231-11	s	CERAMIC, CHIP 15pF 5% 50V
C229	1-163-259-91	s	CERAMIC, CHIP 220pF 5% 50V
C230	1-126-390-11	s	ELECT, CHIP 22uF 20% 6.3V
C231	1-163-037-11	s	CERAMIC, CHIP 0.022uF 10% 25V
C232	1-163-037-11	s	CERAMIC, CHIP 0.022uF 10% 25V
C233	1-163-037-11	s	CERAMIC, CHIP 0.022uF 10% 25V
C234	1-163-037-11	s	CERAMIC, CHIP 0.022uF 10% 25V
C235	1-163-227-11	s	CERAMIC, CHIP 10pF 5% 50V
C301	1-126-391-11	s	ELECT, CHIP 47uF 20% 6.3V
C302	1-126-391-11	s	ELECT, CHIP 47uF 20% 6.3V
C303	1-163-038-91	s	CERAMIC, CHIP 0.1uF 25V
C304	1-126-391-11	s	ELECT, CHIP 47uF 20% 6.3V
C305	1-126-391-11	s	ELECT, CHIP 47uF 20% 6.3V
C306	1-163-038-91	s	CERAMIC, CHIP 0.1uF 25V
C307	1-163-038-91	s	CERAMIC, CHIP 0.1uF 25V
C308	1-163-038-91	s	CERAMIC, CHIP 0.1uF 25V

(IO-149 BOARD(For NTSC); Suffix -14)

Ref. No. or Q'ty	Part No.	SP	Description
C309	1-163-231-11	s	CERAMIC, CHIP 15pF 5% 50V
C310	1-163-037-11	s	CERAMIC, CHIP 0.022uF 10% 25V
C311	1-163-120-00	s	CERAMIC, CHIP 130pF 5% 50V
C312	1-163-037-11	s	CERAMIC, CHIP 0.022uF 10% 25V
C313	1-163-038-91	s	CERAMIC, CHIP 0.1uF 25V
C314	1-163-038-91	s	CERAMIC, CHIP 0.1uF 25V
C315	1-163-037-11	s	CERAMIC, CHIP 0.022uF 10% 25V
C316	1-163-037-11	s	CERAMIC, CHIP 0.022uF 10% 25V
C317	1-163-037-11	s	CERAMIC, CHIP 0.022uF 10% 25V
C318	1-163-231-11	s	CERAMIC, CHIP 15pF 5% 50V
C319	1-163-120-00	s	CERAMIC, CHIP 130pF 5% 50V
C320	1-163-037-11	s	CERAMIC, CHIP 0.022uF 10% 25V
C321	1-126-391-11	s	ELECT, CHIP 47uF 20% 6.3V
C324	1-163-038-91	s	CERAMIC, CHIP 0.1uF 25V
C326	1-126-396-11	s	ELECT, CHIP 47uF 20% 16V
C327	1-126-391-11	s	ELECT, CHIP 47uF 20% 6.3V
C328	1-163-037-11	s	CERAMIC, CHIP 0.022uF 10% 25V
C329	1-126-396-11	s	ELECT, CHIP 47uF 20% 16V
C330	1-163-037-11	s	CERAMIC, CHIP 0.022uF 10% 25V
C331	1-126-396-11	s	ELECT, CHIP 47uF 20% 16V
C332	1-163-038-91	s	CERAMIC, CHIP 0.1uF 25V
C333	1-163-038-91	s	CERAMIC, CHIP 0.1uF 25V
C334	1-163-224-11	s	CERAMIC, CHIP 7pF 0.25pF 50V
C335	1-163-231-11	s	CERAMIC, CHIP 15pF 5% 50V
C336	1-163-037-11	s	CERAMIC, CHIP 0.022uF 10% 25V
C337	1-163-231-11	s	CERAMIC, CHIP 15pF 5% 50V
C338	1-163-038-91	s	CERAMIC, CHIP 0.1uF 25V
C339	1-163-243-11	s	CERAMIC, CHIP 47pF 5% 50V
C340	1-163-243-11	s	CERAMIC, CHIP 47pF 5% 50V
C341	1-163-239-11	s	CERAMIC, CHIP 33pF 5% 50V
C342	1-163-239-11	s	CERAMIC, CHIP 33pF 5% 50V
C343	1-126-392-11	s	ELECT, CHIP 100uF 20% 6.3V
C344	1-163-235-11	s	CERAMIC, CHIP 22pF 5% 50V
C345	1-163-235-11	s	CERAMIC, CHIP 22pF 5% 50V
C346	1-126-394-11	s	ELECT, CHIP 10uF 20% 16V
C347	1-126-394-11	s	ELECT, CHIP 10uF 20% 16V
C348	1-126-391-11	s	ELECT, CHIP 47uF 20% 6.3V
C349	1-163-809-11	s	CERAMIC, CHIP 0.047uF 10% 25V
C350	1-126-391-11	s	ELECT, CHIP 47uF 20% 6.3V
C351	1-163-038-91	s	CERAMIC, CHIP 0.1uF 25V
C352	1-163-037-11	s	CERAMIC, CHIP 0.022uF 10% 25V
C353	1-163-037-11	s	CERAMIC, CHIP 0.022uF 10% 25V
C354	1-163-038-91	s	CERAMIC, CHIP 0.1uF 25V
C355	1-163-227-11	s	CERAMIC, CHIP 10pF 5% 50V
C356	1-163-037-11	s	CERAMIC, CHIP 0.022uF 10% 25V
C357	1-163-037-11	s	CERAMIC, CHIP 0.022uF 10% 25V
C358	1-163-037-11	s	CERAMIC, CHIP 0.022uF 10% 25V
C359	1-163-038-91	s	CERAMIC, CHIP 0.1uF 25V
C360	1-163-038-91	s	CERAMIC, CHIP 0.1uF 25V
C361	1-163-038-91	s	CERAMIC, CHIP 0.1uF 25V
C362	1-163-243-11	s	CERAMIC, CHIP 47pF 5% 50V
C363	1-163-037-11	s	CERAMIC, CHIP 0.022uF 10% 25V
C364	1-163-037-11	s	CERAMIC, CHIP 0.022uF 10% 25V
C365	1-163-222-11	s	CERAMIC, CHIP 5pF 50V
C366	1-163-037-11	s	CERAMIC, CHIP 0.022uF 10% 25V
C367	1-163-243-11	s	CERAMIC, CHIP 47pF 5% 50V
C368	1-163-037-11	s	CERAMIC, CHIP 0.022uF 10% 25V
C369	1-163-037-11	s	CERAMIC, CHIP 0.022uF 10% 25V
C370	1-163-037-11	s	CERAMIC, CHIP 0.022uF 10% 25V

(IO-149 BOARD(For NTSC); Suffix -14)

Ref. No. or Q'ty	Part No.	SP	Description
C371	1-163-037-11	s	CERAMIC, CHIP 0.022uF 10% 25V
C372	1-163-037-11	s	CERAMIC, CHIP 0.022uF 10% 25V
C373	1-126-391-11	s	ELECT, CHIP 47uF 20% 6.3V
C374	1-163-037-11	s	CERAMIC, CHIP 0.022uF 10% 25V
C375	1-163-037-11	s	CERAMIC, CHIP 0.022uF 10% 25V
C376	1-163-037-11	s	CERAMIC, CHIP 0.022uF 10% 25V
C377	1-126-391-11	s	ELECT, CHIP 47uF 20% 6.3V
C378	1-126-396-11	s	ELECT, CHIP 47uF 20% 16V
C379	1-163-037-11	s	CERAMIC, CHIP 0.022uF 10% 25V
C380	1-163-037-11	s	CERAMIC, CHIP 0.022uF 10% 25V
C381	1-163-227-11	s	CERAMIC, CHIP 10pF 5% 50V
C382	1-163-037-11	s	CERAMIC, CHIP 0.022uF 10% 25V
C383	1-163-227-11	s	CERAMIC, CHIP 10pF 5% 50V
C384	1-163-037-11	s	CERAMIC, CHIP 0.022uF 10% 25V
C385	1-163-038-91	s	CERAMIC, CHIP 0.1uF 25V
C386	1-163-038-91	s	CERAMIC, CHIP 0.1uF 25V
C387	1-163-037-11	s	CERAMIC, CHIP 0.022uF 10% 25V
C388	1-163-113-00	s	CERAMIC, CHIP 68pF 5% 50V
C501	1-163-235-11	s	CERAMIC, CHIP 22pF 5% 50V
C502	1-163-038-91	s	CERAMIC, CHIP 0.1uF 25V
C503	1-126-394-11	s	ELECT, CHIP 10uF 20% 16V
C504	1-126-394-11	s	ELECT, CHIP 10uF 20% 16V
C505	1-126-394-11	s	ELECT, CHIP 10uF 20% 16V
C506	1-163-037-11	s	CERAMIC, CHIP 0.022uF 10% 25V
C507	1-126-396-11	s	ELECT, CHIP 47uF 20% 16V
C508	1-126-396-11	s	ELECT, CHIP 47uF 20% 16V
C509	1-126-394-11	s	ELECT, CHIP 10uF 20% 16V
C510	1-126-394-11	s	ELECT, CHIP 10uF 20% 16V
C511	1-126-401-11	s	ELECT, CHIP 1uF 20% 50V
C512	1-163-235-11	s	CERAMIC, CHIP 22pF 5% 50V
C513	1-164-222-11	s	CERAMIC, CHIP 0.22uF 25V
C514	1-163-038-91	s	CERAMIC, CHIP 0.1uF 25V
C515	1-163-038-91	s	CERAMIC, CHIP 0.1uF 25V
C516	1-163-121-00	s	CERAMIC, CHIP 150pF 5% 50V
C517	1-163-021-91	s	CERAMIC 0.01uF 10% 50V
C518	1-163-037-11	s	CERAMIC, CHIP 0.022uF 10% 25V
C519	1-163-038-91	s	CERAMIC, CHIP 0.1uF 25V
C520	1-163-038-91	s	CERAMIC, CHIP 0.1uF 25V
C521	1-126-396-11	s	ELECT, CHIP 47uF 20% 16V
C522	1-126-393-11	s	ELECT, CHIP 33uF 20% 10V
C523	1-163-038-91	s	CERAMIC, CHIP 0.1uF 25V
C524	1-163-239-11	s	CERAMIC, CHIP 33pF 5% 50V
C525	1-163-259-91	s	CERAMIC, CHIP 220pF 5% 50V
C526	1-163-038-91	s	CERAMIC, CHIP 0.1uF 25V
C527	1-163-037-11	s	CERAMIC, CHIP 0.022uF 10% 25V
C528	1-163-038-91	s	CERAMIC, CHIP 0.1uF 25V
C529	1-163-037-11	s	CERAMIC, CHIP 0.022uF 10% 25V
C530	1-163-038-91	s	CERAMIC, CHIP 0.1uF 25V
C531	1-163-038-91	s	CERAMIC, CHIP 0.1uF 25V
C532	1-163-038-91	s	CERAMIC, CHIP 0.1uF 25V
C533	1-163-038-91	s	CERAMIC, CHIP 0.1uF 25V
C534	1-126-391-11	s	ELECT, CHIP 47uF 20% 6.3V
C535	1-163-038-91	s	CERAMIC, CHIP 0.1uF 25V
C536	1-163-038-91	s	CERAMIC, CHIP 0.1uF 25V
C537	1-163-989-11	s	CERAMIC, CHIP 0.033uF 10% 25V
C538	1-163-121-00	s	CERAMIC, CHIP 150pF 5% 50V
C539	1-163-038-91	s	CERAMIC, CHIP 0.1uF 25V
C540	1-163-038-91	s	CERAMIC, CHIP 0.1uF 25V
C541	1-163-038-91	s	CERAMIC, CHIP 0.1uF 25V

(IO-149 BOARD(For NTSC); Suffix -14)

Ref. No. or Q'ty	Part No.	SP	Description
C543	1-126-391-11	s	ELECT, CHIP 47uF 20% 6.3V
C544	1-126-391-11	s	ELECT, CHIP 47uF 20% 6.3V
C545	1-163-038-91	s	CERAMIC, CHIP 0.1uF 25V
C546	1-163-239-11	s	CERAMIC, CHIP 33pF 5% 50V
C547	1-163-037-11	s	CERAMIC, CHIP 0.022uF 10% 25V
C548	1-163-038-91	s	CERAMIC, CHIP 0.1uF 25V
C549	1-126-391-11	s	ELECT, CHIP 47uF 20% 6.3V
C550	1-163-251-11	s	CERAMIC, CHIP 100pF 5% 50V
C551	1-163-037-11	s	CERAMIC, CHIP 0.022uF 10% 25V
C552	1-163-038-91	s	CERAMIC, CHIP 0.1uF 25V
C553	1-163-038-91	s	CERAMIC, CHIP 0.1uF 25V
C554	1-163-133-00	s	CERAMIC, CHIP 470pF 5% 50V
C601	1-163-037-11	s	CERAMIC, CHIP 0.022uF 10% 25V
C602	1-163-037-11	s	CERAMIC, CHIP 0.022uF 10% 25V
C603	1-163-037-11	s	CERAMIC, CHIP 0.022uF 10% 25V
C604	1-163-275-11	s	CERAMIC, CHIP 0.001uF 5% 50V
C605	1-126-401-11	s	ELECT, CHIP 1uF 20% 50V
C606	1-126-404-11	s	ELECT, CHIP 4.7uF 20% 50V
C607	1-163-021-91	s	CERAMIC, CHIP 0.01uF 10% 50V
C608	1-163-037-11	s	CERAMIC, CHIP 0.022uF 10% 25V
C609	1-163-037-11	s	CERAMIC, CHIP 0.022uF 10% 25V
C610	1-163-259-91	s	CERAMIC, CHIP 220pF 5% 50V
C611	1-163-037-11	s	CERAMIC, CHIP 0.022uF 10% 25V
C612	1-163-227-11	s	CERAMIC, CHIP 10pF 5% 50V
C613	1-163-239-11	s	CERAMIC, CHIP 33pF 5% 50V
C614	1-163-243-11	s	CERAMIC, CHIP 47pF 5% 50V
C615	1-163-113-00	s	CERAMIC, CHIP 68pF 5% 50V
C616	1-163-021-91	s	CERAMIC, CHIP 0.01uF 10% 50V
C617	1-163-121-00	s	CERAMIC, CHIP 150pF 5% 50V
C618	1-163-021-91	s	CERAMIC, CHIP 0.01uF 10% 50V
C619	1-163-263-11	s	CERAMIC, CHIP 330pF 5% 50V
C620	1-163-809-11	s	CERAMIC, CHIP 0.047uF 10% 25V
C621	1-163-809-11	s	CERAMIC, CHIP 0.047uF 10% 25V
C622	1-163-038-91	s	CERAMIC, CHIP 0.1uF 25V
C623	1-163-038-91	s	CERAMIC, CHIP 0.1uF 25V
C624	1-163-038-91	s	CERAMIC, CHIP 0.1uF 25V
C625	1-163-037-11	s	CERAMIC, CHIP 0.022uF 10% 25V
C626	1-163-227-11	s	CERAMIC, CHIP 10pF 5% 50V
C627	1-126-391-11	s	ELECT, CHIP 47uF 20% 6.3V
C628	1-163-037-11	s	CERAMIC, CHIP 0.022uF 10% 25V
C629	1-126-391-11	s	ELECT, CHIP 47uF 20% 6.3V
C631	1-163-227-11	s	CERAMIC, CHIP 10pF 5% 50V
C632	1-126-401-11	s	ELECT, CHIP 1uF 20% 50V
C633	1-163-037-11	s	CERAMIC, CHIP 0.022uF 10% 25V
C634	1-163-243-11	s	CERAMIC, CHIP 47pF 5% 50V
C635	1-163-037-11	s	CERAMIC, CHIP 0.022uF 10% 25V
C636	1-163-037-11	s	CERAMIC, CHIP 0.022uF 10% 25V
C637	1-163-037-11	s	CERAMIC, CHIP 0.022uF 10% 25V
C638	1-163-038-91	s	CERAMIC, CHIP 0.1uF 25V
C639	1-163-235-11	s	CERAMIC, CHIP 22pF 5% 50V
C640	1-163-037-11	s	CERAMIC, CHIP 0.022uF 10% 25V
C641	1-163-038-91	s	CERAMIC, CHIP 0.1uF 25V
C642	1-163-037-11	s	CERAMIC, CHIP 0.022uF 10% 25V
C643	1-163-243-11	s	CERAMIC, CHIP 47pF 5% 50V
C644	1-163-037-11	s	CERAMIC, CHIP 0.022uF 10% 25V
C645	1-126-393-11	s	ELECT, CHIP 33uF 20% 10V
C646	1-163-037-11	s	CERAMIC, CHIP 0.022uF 10% 25V
C647	1-163-037-11	s	CERAMIC, CHIP 0.022uF 10% 25V
C648	1-163-037-11	s	CERAMIC, CHIP 0.022uF 10% 25V

(IO-149 BOARD(For NTSC); Suffix -14)

Ref. No. or Q'ty	Part No.	SP	Description
C649	1-163-037-11	s	CERAMIC, CHIP 0.022uF 10% 25V
C650	1-126-393-11	s	ELECT, CHIP 33uF 20% 10V
C651	1-163-037-11	s	CERAMIC, CHIP 0.022uF 10% 25V
C652	1-163-237-11	s	CERAMIC, CHIP 27pF 5% 50V
C653	1-163-237-11	s	CERAMIC, CHIP 27pF 5% 50V
C654	1-163-245-11	s	CERAMIC, CHIP 56pF 5% 50V
C655	1-163-245-11	s	CERAMIC, CHIP 56pF 5% 50V
C656	1-163-237-11	s	CERAMIC, CHIP 27pF 5% 50V
C657	1-163-237-11	s	CERAMIC, CHIP 27pF 5% 50V
C658	1-163-037-11	s	CERAMIC, CHIP 0.022uF 10% 25V
C659	1-163-037-11	s	CERAMIC, CHIP 0.022uF 10% 25V
C660	1-163-037-11	s	CERAMIC, CHIP 0.022uF 10% 25V
C661	1-163-037-11	s	CERAMIC, CHIP 0.022uF 10% 25V
C662	1-102-110-00	s	CERAMIC, CHIP 220pF 10% 50V
C663	1-163-133-00	s	CERAMIC, CHIP 470pF 5% 50V
CT601	1-141-345-11	s	CAP, TRIMMER, CHIP 40pF
CT602	1-141-345-11	s	CAP, TRIMMER, CHIP 40pF
D1	8-719-941-04	s	DIODE SB007-03CP
D2	8-719-941-04	s	DIODE SB007-03CP
D3	8-719-053-18	s	DIODE 1SR154-400TE-25
D4	8-719-053-18	s	DIODE 1SR154-400TE-25
D5	8-719-053-18	s	DIODE 1SR154-400TE-25
D101	8-719-041-39	s	DIODE KV1470
D102	8-719-041-39	s	DIODE KV1470
D103	8-719-041-39	s	DIODE KV1470
D104	8-719-941-23	s	DIODE DA204U
D105	8-719-941-23	s	DIODE DA204U
D106	8-719-989-08	s	DIODE RB717F
D301	8-719-976-99	s	DIODE DTZ5.1B
D302	8-719-941-23	s	DIODE DA204U
D501	8-719-941-23	s	DIODE DA204U
D601	8-719-002-81	s	DIODE 1T363
D602	8-719-002-81	s	DIODE 1T363
F1	⚠ 1-576-124-11	s	LINK, IC, CHIP 1A
F2	⚠ 1-533-282-21	s	LINK, IC, CHIP 2A
F3	⚠ 1-576-124-11	s	LINK, IC, CHIP 1A
F4	⚠ 1-533-282-21	s	LINK, IC, CHIP 2A
F5	⚠ 1-576-124-11	s	LINK, IC, CHIP 1A
F6	⚠ 1-533-282-21	s	LINK, IC, CHIP 2A
FL101	1-233-598-11	s	FILTER, LOW-PASS
FL102	1-233-598-11	s	FILTER, LOW-PASS
FL103	1-233-614-11	s	FILTER, LOW-PASS
FL104	1-239-771-11	s	FILTER, LOW-PASS
FL1001	1-239-719-11	s	FILTER, NOISE, CHIP
FL1002	1-239-719-11	s	FILTER, NOISE, CHIP
FL1003	1-239-719-11	s	FILTER, NOISE, CHIP
IC1	8-759-157-17	s	IC PQ05SZ1U
IC2	8-759-157-17	s	IC PQ05SZ1U
IC3	8-759-172-41	s	IC L78M09T-TL
IC4	8-759-172-41	s	IC L78M09T-TL
IC5	8-759-822-95	s	IC L79M05T-FA
IC6	8-759-822-95	s	IC L79M05T-FA
IC7	8-759-822-95	s	IC L79M05T-FA
IC8	8-759-157-17	s	IC PQ05SZ1U
IC101	8-759-198-63	s	IC S-81230SG-QB-T1
IC102	8-759-278-58	s	IC NJM4558V-TE2

(IO-149 BOARD(For NTSC); Suffix -14)

Ref. No. or Q'ty	Part No.	SP	Description
IC103	8-759-278-58	s	IC NJM4558V-TE2
IC105	8-759-278-58	s	IC NJM4558V-TE2
IC106	8-759-082-61	s	IC TC4W53FU
IC107	8-759-076-06	s	IC TL064CPW
IC108	8-759-076-06	s	IC TL064CPW
IC109	8-752-052-77	s	IC CXA1450M
IC110	8-752-363-60	s	IC CXD2307R-T4
IC111	8-759-287-54	s	IC TL084CPW-E20
IC112	8-759-287-54	s	IC TL084CPW-E20
IC113	8-759-287-54	s	IC TL084CPW-E20
IC114	8-759-066-59	s	IC TC74HC4053AFS
IC115	8-752-054-80	s	IC CXA1521M
IC116	8-752-054-80	s	IC CXA1521M
IC117	8-759-906-59	s	IC CX22017
IC118	8-759-907-81	s	IC SN74LS221NS
IC301	8-759-082-59	s	IC TC7W32FU
IC302	8-759-082-61	s	IC TC4W53FU
IC304	8-759-287-54	s	IC TL084CPW-E20
IC305	8-759-082-61	s	IC TC4W53FU
IC306	8-752-052-73	s	IC CXA1451M
IC307	8-752-052-73	s	IC CXA1451M
IC308	8-759-262-00	s	IC MC14576CF
IC309	8-752-052-73	s	IC CXA1451M
IC310	8-752-052-73	s	IC CXA1451M
IC311	8-752-052-73	s	IC CXA1451M
IC312	8-759-082-61	s	IC TC4W53FU
IC501	8-759-082-57	s	IC TC7W04FU
IC502	8-752-052-77	s	IC CXA1450M
IC503	8-752-052-77	s	IC CXA1450M
IC504	8-759-173-16	s	IC TL062CPW
IC505	8-759-076-06	s	IC TL064CPW
IC506	8-759-430-88	s	IC TC74HC4051AFS(EL)
IC507	8-759-324-03	s	IC HA17431UA-TL
IC508	8-759-076-06	s	IC TL064CPW
IC509	8-752-052-77	s	IC CXA1450M
IC510	8-759-262-03	s	IC MC14577CF
IC512	8-759-987-27	s	IC LM1881M
IC513	8-759-523-97	s	IC TC74VHC123AFT(EL)
IC514	8-759-980-04	s	IC LM311PS
IC515	8-759-702-08	s	IC NJM360M
IC516	8-752-052-77	s	IC CXA1450M
IC601	8-759-082-57	s	IC TC7W04FU
IC602	8-759-459-26	s	IC TC5081BP
IC603	8-759-524-04	s	IC TC74VHC125FT(EL)
IC604	8-759-058-57	s	IC TC7S04FU-TE85L
IC605	8-759-357-24	s	IC MC68HC705C8AFU
IC606	8-752-335-47	s	IC CXD1216M
IC607	8-759-066-59	s	IC TC74HC4053AFS
IC608	8-759-241-03	s	IC TC74HC191AF
IC609	8-759-082-57	s	IC TC7W04FU
IC610	8-759-271-86	s	IC TC7SH04FU
IC611	8-759-271-86	s	IC TC7SH04FU
IC612	8-759-523-97	s	IC TC74VHC123AFT(EL)
IC613	8-759-524-22	s	IC TC74VHC175FT(EL)
IC614	8-759-526-00	s	IC CXD8165AQ
IC615	8-752-339-46	s	IC CXD1177Q
IC616	8-759-082-57	s	IC TC7W04FU
IC617	8-759-066-59	s	IC TC74HC4053AFS
IC618	8-759-271-86	s	IC TC7SH04FU

(IO-149 BOARD(For NTSC); Suffix -14)

Ref. No. or Q'ty	Part No.	SP	Description
IC619	8-759-271-86	s	IC TC7SH04FU
L101	1-414-402-11	s	INDUCTOR, CHIP 47uH
L102	1-414-400-11	s	INDUCTOR, CHIP 22uH
L103	1-414-400-11	s	INDUCTOR, CHIP 22uH
L104	1-414-402-11	s	INDUCTOR, CHIP 47uH
L105	1-414-402-11	s	INDUCTOR, CHIP 47uH
L106	1-414-400-11	s	INDUCTOR, CHIP 22uH
L107	1-414-400-11	s	INDUCTOR, CHIP 22uH
L108	1-414-402-11	s	INDUCTOR, CHIP 47uH
L109	1-414-402-11	s	INDUCTOR, CHIP 47uH
L110	1-414-402-11	s	INDUCTOR, CHIP 47uH
L111	1-414-402-11	s	INDUCTOR, CHIP 47uH
L112	1-414-404-11	s	INDUCTOR, CHIP 100uH
L113	1-414-402-11	s	INDUCTOR, CHIP 47uH
L114	1-414-404-11	s	INDUCTOR, CHIP 100uH
L115	1-410-385-11	s	INDUCTOR, CHIP 22uH
L117	1-410-393-11	s	INDUCTOR, CHIP 100uH
L301	1-414-402-11	s	INDUCTOR, CHIP 47uH
L302	1-414-402-11	s	INDUCTOR, CHIP 47uH
L303	1-414-402-11	s	INDUCTOR, CHIP 47uH
L304	1-414-402-11	s	INDUCTOR, CHIP 47uH
L305	1-410-391-11	s	INDUCTOR, CHIP 68uH
L306	1-410-391-11	s	INDUCTOR, CHIP 68uH
L307	1-414-402-11	s	INDUCTOR, CHIP 47uH
L308	1-414-402-11	s	INDUCTOR, CHIP 47uH
L309	1-414-402-11	s	INDUCTOR, CHIP 47uH
L310	1-410-387-11	s	INDUCTOR, CHIP 33uH
L311	1-410-387-11	s	INDUCTOR, CHIP 33uH
L312	1-414-402-11	s	INDUCTOR, CHIP 47uH
L313	1-414-402-11	s	INDUCTOR, CHIP 47uH
L314	1-410-389-31	s	INDUCTOR, CHIP 47uH
L315	1-410-387-11	s	INDUCTOR, CHIP 33uH
L501	1-410-390-11	s	INDUCTOR, CHIP 56uH
L502	1-410-393-11	s	INDUCTOR, CHIP 100uH
L503	1-414-402-11	s	INDUCTOR, CHIP 47uH
L504	1-414-402-11	s	INDUCTOR, CHIP 47uH
L505	1-410-391-11	s	INDUCTOR, CHIP 68uH
L506	1-414-402-11	s	INDUCTOR, CHIP 47uH
L507	1-414-402-11	s	INDUCTOR, CHIP 47uH
L601	1-414-402-11	s	INDUCTOR, CHIP 47uH
L602	1-414-402-11	s	INDUCTOR, CHIP 47uH
L603	1-414-400-11	s	INDUCTOR, CHIP 22uH
L604	1-414-400-11	s	INDUCTOR, CHIP 22uH
L605	1-410-389-31	s	INDUCTOR, CHIP 47uH
L606	1-410-389-31	s	INDUCTOR, CHIP 47uH
L607	1-410-389-31	s	INDUCTOR, CHIP 47uH
L608	1-410-389-31	s	INDUCTOR, CHIP 47uH
Q101	8-729-117-32	s	TRANSISTOR 2SC4177
Q102	8-729-117-32	s	TRANSISTOR 2SC4177
Q103	8-729-117-32	s	TRANSISTOR 2SC4177
Q104	8-729-140-63	s	TRANSISTOR 2SA1611-M5M6
Q105	8-729-117-32	s	TRANSISTOR 2SC4177
Q106	8-729-117-32	s	TRANSISTOR 2SC4177
Q107	8-729-117-32	s	TRANSISTOR 2SC4177
Q108	8-729-923-06	s	TRANSISTOR FMW-8
Q109	8-729-923-06	s	TRANSISTOR FMW-8
Q110	8-729-923-06	s	TRANSISTOR FMW-8

(IO-149 BOARD(For NTSC); Suffix -14)

Ref. No. or Q'ty	Part No.	SP	Description
Q111	8-729-904-04	s	TRANSISTOR FMS2
Q112	8-729-904-04	s	TRANSISTOR FMS2
Q113	8-729-904-04	s	TRANSISTOR FMS2
Q114	8-729-903-82	s	TRANSISTOR FMW2
Q115	8-729-903-82	s	TRANSISTOR FMW2
Q116	8-729-903-82	s	TRANSISTOR FMW2
Q117	8-729-931-46	s	TRANSISTOR FMW7
Q118	8-729-931-46	s	TRANSISTOR FMW7
Q119	8-729-931-46	s	TRANSISTOR FMW7
Q120	8-729-907-26	s	TRANSISTOR IMX1
Q121	8-729-907-26	s	TRANSISTOR IMX1
Q122	8-729-907-26	s	TRANSISTOR IMX1
Q123	8-729-143-14	s	TRANSISTOR 2SC4176-B35
Q124	8-729-117-32	s	TRANSISTOR 2SC4177
Q125	8-729-140-63	s	TRANSISTOR 2SA1611-M5M6
Q126	8-729-117-32	s	TRANSISTOR 2SC4177
Q127	8-729-143-14	s	TRANSISTOR 2SC4176-B35
Q128	8-729-140-63	s	TRANSISTOR 2SA1611-M5M6
Q129	8-729-903-82	s	TRANSISTOR FMW2
Q130	8-729-117-32	s	TRANSISTOR 2SC4177
Q131	8-729-903-82	s	TRANSISTOR FMW2
Q301	8-729-143-14	s	TRANSISTOR 2SC4176-B35
Q302	8-729-904-41	s	TRANSISTOR FMY3
Q303	8-729-140-63	s	TRANSISTOR 2SA1611-M5M6
Q304	8-729-140-63	s	TRANSISTOR 2SA1611-M5M6
Q305	8-729-117-32	s	TRANSISTOR 2SC4177
Q306	8-729-117-32	s	TRANSISTOR 2SC4177
Q307	8-729-907-26	s	TRANSISTOR IMX1
Q308	8-729-117-32	s	TRANSISTOR 2SC4177
Q309	8-729-117-32	s	TRANSISTOR 2SC4177
Q310	8-729-143-14	s	TRANSISTOR 2SC4176-B35
Q311	8-729-117-32	s	TRANSISTOR 2SC4177
Q312	8-729-907-26	s	TRANSISTOR IMX1
Q313	8-729-140-63	s	TRANSISTOR 2SA1611-M5M6
Q314	8-729-140-63	s	TRANSISTOR 2SA1611-M5M6
Q315	8-729-117-32	s	TRANSISTOR 2SC4177
Q316	8-729-140-63	s	TRANSISTOR 2SA1611-M5M6
Q317	8-729-117-32	s	TRANSISTOR 2SC4177
Q318	8-729-904-41	s	TRANSISTOR FMY3
Q319	8-729-904-41	s	TRANSISTOR FMY3
Q320	8-729-117-32	s	TRANSISTOR 2SC4177
Q321	8-729-117-32	s	TRANSISTOR 2SC4177
Q322	8-729-117-32	s	TRANSISTOR 2SC4177
Q323	8-729-143-14	s	TRANSISTOR 2SC4176-B35
Q324	8-729-140-63	s	TRANSISTOR 2SA1611-M5M6
Q325	8-729-140-63	s	TRANSISTOR 2SA1611-M5M6
Q326	8-729-117-32	s	TRANSISTOR 2SC4177
Q327	8-729-117-32	s	TRANSISTOR 2SC4177
Q328	8-729-117-32	s	TRANSISTOR 2SC4177
Q329	8-729-117-32	s	TRANSISTOR 2SC4177
Q330	8-729-117-32	s	TRANSISTOR 2SC4177
Q331	8-729-904-41	s	TRANSISTOR FMY3
Q332	8-729-422-44	s	TRANSISTOR 2SK663
Q333	8-729-422-44	s	TRANSISTOR 2SK663
Q334	8-729-422-44	s	TRANSISTOR 2SK663
Q335	8-729-422-44	s	TRANSISTOR 2SK663
Q336	8-729-140-63	s	TRANSISTOR 2SA1611-M5M6
Q337	8-729-140-63	s	TRANSISTOR 2SA1611-M5M6
Q338	8-729-140-63	s	TRANSISTOR 2SA1611-M5M6

(IO-149 BOARD(For NTSC); Suffix -14)

Ref. No. or Q'ty	Part No.	SP	Description
Q339	8-729-140-63	s	TRANSISTOR 2SA1611-M5M6
Q340	8-729-117-32	s	TRANSISTOR 2SC4177
Q341	8-729-907-26	s	TRANSISTOR IMX1
Q342	8-729-907-26	s	TRANSISTOR IMX1
Q343	8-729-117-32	s	TRANSISTOR 2SC4177
Q344	8-729-117-32	s	TRANSISTOR 2SC4177
Q345	8-729-907-26	s	TRANSISTOR IMX1
Q346	8-729-117-32	s	TRANSISTOR 2SC4177
Q347	8-729-907-26	s	TRANSISTOR IMX1
Q348	8-729-117-32	s	TRANSISTOR 2SC4177
Q349	8-729-140-63	s	TRANSISTOR 2SA1611-M5M6
Q350	8-729-140-63	s	TRANSISTOR 2SA1611-M5M6
Q501	8-729-117-32	s	TRANSISTOR 2SC4177
Q502	8-729-117-32	s	TRANSISTOR 2SC4177
Q503	8-729-117-32	s	TRANSISTOR 2SC4177
Q504	8-729-117-32	s	TRANSISTOR 2SC4177
Q505	8-729-117-32	s	TRANSISTOR 2SC4177
Q506	8-729-904-41	s	TRANSISTOR FMY3
Q507	8-729-117-32	s	TRANSISTOR 2SC4177
Q508	8-729-117-32	s	TRANSISTOR 2SC4177
Q509	8-729-117-32	s	TRANSISTOR 2SC4177
Q601	8-729-140-47	s	TRANSISTOR 2SC3735-T2B-B35
Q602	8-729-140-47	s	TRANSISTOR 2SC3735-T2B-B35
Q603	8-729-140-47	s	TRANSISTOR 2SC3735-T2B-B35
Q604	8-729-140-47	s	TRANSISTOR 2SC3735-T2B-B35
Q605	8-729-117-32	s	TRANSISTOR 2SC4177
Q606	8-729-117-32	s	TRANSISTOR 2SC4177
Q607	8-729-117-32	s	TRANSISTOR 2SC4177
Q608	8-729-117-32	s	TRANSISTOR 2SC4177
R101	1-208-803-11	s	METAL, CHIP 7.5k 0.5% 1/10W
R102	1-208-796-11	s	METAL, CHIP 3.9k 0.5% 1/10W
R103	1-208-798-11	s	METAL, CHIP 4.7k 0.5% 1/10W
R104	1-208-806-11	s	METAL, CHIP 10k 0.5% 1/10W
R105	1-216-041-00	s	METAL, CHIP 470 5% 1/10W
R106	1-216-295-91	s	RES, CHIP 0
R107	1-208-783-11	s	METAL, CHIP 1.1k 0.5% 1/10W
R108	1-208-799-11	s	METAL, CHIP 5.1k 0.5% 1/10W
R110	1-216-295-91	s	RES, CHIP 0
R112	1-216-295-91	s	RES, CHIP 0
R113	1-208-799-11	s	METAL, CHIP 5.1k 0.5% 1/10W
R114	1-208-796-11	s	METAL, CHIP 3.9k 0.5% 1/10W
R115	1-208-794-11	s	METAL, CHIP 3.3k 0.5% 1/10W
R116	1-216-073-00	s	METAL, CHIP 10k 5% 1/10W
R117	1-208-786-11	s	METAL, CHIP 1.5k 0.5% 1/10W
R118	1-208-788-11	s	METAL, CHIP 1.8k 0.5% 1/10W
R119	1-208-806-11	s	METAL, CHIP 10k 0.5% 1/10W
R120	1-208-806-11	s	METAL, CHIP 10k 0.5% 1/10W
R121	1-216-073-00	s	METAL, CHIP 10k 5% 1/10W
R122	1-216-073-00	s	METAL, CHIP 10k 5% 1/10W
R123	1-216-085-00	s	METAL, CHIP 33k 5% 1/10W
R124	1-216-085-00	s	METAL, CHIP 33k 5% 1/10W
R125	1-216-121-91	s	METAL, CHIP 1M 5% 1/10W
R126	1-216-121-91	s	METAL, CHIP 1M 5% 1/10W
R127	1-216-085-00	s	METAL, CHIP 33k 5% 1/10W
R128	1-216-085-00	s	METAL, CHIP 33k 5% 1/10W
R129	1-216-121-91	s	METAL, CHIP 1M 5% 1/10W
R130	1-216-121-91	s	METAL, CHIP 1M 5% 1/10W
R131	1-216-033-00	s	METAL, CHIP 220 5% 1/10W
R132	1-216-033-00	s	METAL, CHIP 220 5% 1/10W

(IO-149 BOARD(For NTSC); Suffix -14)

Ref. No. or Q'ty	Part No.	SP	Description
R133	1-216-053-00	s	METAL, CHIP 1.5k 5% 1/10W
R134	1-216-053-00	s	METAL, CHIP 1.5k 5% 1/10W
R135	1-208-806-11	s	METAL, CHIP 10k 0.5% 1/10W
R136	1-216-073-00	s	METAL, CHIP 10k 5% 1/10W
R137	1-216-081-00	s	METAL, CHIP 22k 5% 1/10W
R138	1-216-121-91	s	METAL, CHIP 1M 5% 1/10W
R139	1-216-085-00	s	METAL, CHIP 33k 5% 1/10W
R140	1-216-121-91	s	METAL, CHIP 1M 5% 1/10W
R141	1-216-033-00	s	METAL, CHIP 220 5% 1/10W
R142	1-216-065-91	s	METAL, CHIP 4.7k 5% 1/10W
R143	1-216-065-91	s	METAL, CHIP 4.7k 5% 1/10W
R144	1-208-808-11	s	METAL, CHIP 12k 0.5% 1/10W
R145	1-208-809-11	s	METAL, CHIP 13k 0.5% 1/10W
R146	1-208-809-11	s	METAL, CHIP 13k 0.5% 1/10W
R147	1-208-798-11	s	METAL, CHIP 4.7k 0.5% 1/10W
R148	1-208-809-11	s	METAL, CHIP 13k 0.5% 1/10W
R149	1-208-790-11	s	METAL, CHIP 2.2k 0.5% 1/10W
R150	1-208-804-11	s	METAL, CHIP 8.2k 0.5% 1/10W
R151	1-208-790-11	s	METAL, CHIP 2.2k 0.5% 1/10W
R152	1-208-792-11	s	METAL, CHIP 2.7k 0.5% 1/10W
R153	1-208-792-11	s	METAL, CHIP 2.7k 0.5% 1/10W
R154	1-216-085-00	s	METAL, CHIP 33k 5% 1/10W
R155	1-208-806-11	s	METAL, CHIP 10k 0.5% 1/10W
R156	1-208-806-11	s	METAL, CHIP 10k 0.5% 1/10W
R157	1-208-810-11	s	METAL, CHIP 15k 0.5% 1/10W
R158	1-208-810-11	s	METAL, CHIP 15k 0.5% 1/10W
R159	1-208-790-11	s	METAL, CHIP 2.2k 0.5% 1/10W
R160	1-208-810-11	s	METAL, CHIP 15k 0.5% 1/10W
R161	1-208-810-11	s	METAL, CHIP 15k 0.5% 1/10W
R162	1-208-792-11	s	METAL, CHIP 2.7k 0.5% 1/10W
R163	1-208-810-11	s	METAL, CHIP 15k 0.5% 1/10W
R164	1-208-802-11	s	METAL, CHIP 6.8k 0.5% 1/10W
R165	1-208-802-11	s	METAL, CHIP 6.8k 0.5% 1/10W
R166	1-208-810-11	s	METAL, CHIP 15k 0.5% 1/10W
R167	1-208-794-11	s	METAL, CHIP 3.3k 0.5% 1/10W
R168	1-208-790-11	s	METAL, CHIP 2.2k 0.5% 1/10W
R169	1-216-081-00	s	METAL, CHIP 22k 5% 1/10W
R170	1-216-081-00	s	METAL, CHIP 22k 5% 1/10W
R171	1-216-081-00	s	METAL, CHIP 22k 5% 1/10W
R172	1-208-776-11	s	METAL, CHIP 560 0.5% 1/10W
R173	1-208-796-11	s	METAL, CHIP 3.9k 0.5% 1/10W
R174	1-208-796-11	s	METAL, CHIP 3.9k 0.5% 1/10W
R175	1-216-089-91	s	METAL, CHIP 47k 5% 1/10W
R176	1-208-798-11	s	METAL, CHIP 4.7k 0.5% 1/10W
R177	1-216-089-91	s	METAL, CHIP 47k 5% 1/10W
R178	1-216-089-91	s	METAL, CHIP 47k 5% 1/10W
R179	1-208-770-11	s	METAL, CHIP 330 0.5% 1/10W
R180	1-208-770-11	s	METAL, CHIP 330 0.5% 1/10W
R181	1-208-770-11	s	METAL, CHIP 330 0.5% 1/10W
R182	1-208-770-11	s	METAL, CHIP 330 0.5% 1/10W
R183	1-208-770-11	s	METAL, CHIP 330 0.5% 1/10W
R184	1-208-770-11	s	METAL, CHIP 330 0.5% 1/10W
R185	1-216-045-00	s	METAL, CHIP 680 5% 1/10W
R186	1-216-045-00	s	METAL, CHIP 680 5% 1/10W
R187	1-216-017-91	s	METAL, CHIP 47 5% 1/10W
R188	1-216-017-91	s	METAL, CHIP 47 5% 1/10W
R189	1-216-045-00	s	METAL, CHIP 680 5% 1/10W
R190	1-216-017-91	s	METAL, CHIP 47 5% 1/10W
R191	1-216-017-91	s	METAL, CHIP 47 5% 1/10W

(IO-149 BOARD(For NTSC); Suffix -14)

Ref. No. or Q'ty	Part No.	SP	Description
R192	1-216-017-91	s	METAL, CHIP 47 5% 1/10W
R193	1-216-017-91	s	METAL, CHIP 47 5% 1/10W
R194	1-216-057-00	s	METAL, CHIP 2.2k 5% 1/10W
R195	1-216-057-00	s	METAL, CHIP 2.2k 5% 1/10W
R196	1-216-057-00	s	METAL, CHIP 2.2k 5% 1/10W
R197	1-216-049-91	s	METAL, CHIP 1k 5% 1/10W
R198	1-216-049-91	s	METAL, CHIP 1k 5% 1/10W
R199	1-216-049-91	s	METAL, CHIP 1k 5% 1/10W
R200	1-216-049-91	s	METAL, CHIP 1k 5% 1/10W
R201	1-216-049-91	s	METAL, CHIP 1k 5% 1/10W
R202	1-216-049-91	s	METAL, CHIP 1k 5% 1/10W
R203	1-216-057-00	s	METAL, CHIP 2.2k 5% 1/10W
R204	1-216-057-00	s	METAL, CHIP 2.2k 5% 1/10W
R205	1-216-057-00	s	METAL, CHIP 2.2k 5% 1/10W
R206	1-216-033-00	s	METAL, CHIP 220 5% 1/10W
R207	1-216-033-00	s	METAL, CHIP 220 5% 1/10W
R208	1-216-033-00	s	METAL, CHIP 220 5% 1/10W
R209	1-216-045-00	s	METAL, CHIP 680 5% 1/10W
R210	1-216-045-00	s	METAL, CHIP 680 5% 1/10W
R211	1-216-045-00	s	METAL, CHIP 680 5% 1/10W
R212	1-216-077-00	s	METAL, CHIP 15k 5% 1/10W
R213	1-216-077-00	s	METAL, CHIP 15k 5% 1/10W
R214	1-216-077-00	s	METAL, CHIP 15k 5% 1/10W
R215	1-216-027-00	s	METAL, CHIP 120 5% 1/10W
R216	1-216-027-00	s	METAL, CHIP 120 5% 1/10W
R217	1-216-027-00	s	METAL, CHIP 120 5% 1/10W
R218	1-216-045-00	s	METAL, CHIP 680 5% 1/10W
R219	1-216-045-00	s	METAL, CHIP 680 5% 1/10W
R220	1-216-295-91	s	RES, CHIP 0
R221	1-216-017-91	s	METAL, CHIP 47 5% 1/10W
R222	1-216-017-91	s	METAL, CHIP 47 5% 1/10W
R223	1-216-017-91	s	METAL, CHIP 47 5% 1/10W
R224	1-208-782-11	s	METAL, CHIP 1k 0.5% 1/10W
R225	1-208-790-11	s	METAL, CHIP 2.2k 0.5% 1/10W
R226	1-208-782-11	s	METAL, CHIP 1k 0.5% 1/10W
R227	1-208-790-11	s	METAL, CHIP 2.2k 0.5% 1/10W
R228	1-216-049-91	s	METAL, CHIP 1k 5% 1/10W
R229	1-208-790-11	s	METAL, CHIP 2.2k 0.5% 1/10W
R230	1-208-782-11	s	METAL, CHIP 1k 0.5% 1/10W
R231	1-216-121-91	s	METAL, CHIP 1M 5% 1/10W
R232	1-216-049-91	s	METAL, CHIP 1k 5% 1/10W
R233	1-216-049-91	s	METAL, CHIP 1k 5% 1/10W
R234	1-216-121-91	s	METAL, CHIP 1M 5% 1/10W
R235	1-216-121-91	s	METAL, CHIP 1M 5% 1/10W
R236	1-216-049-91	s	METAL, CHIP 1k 5% 1/10W
R237	1-216-049-91	s	METAL, CHIP 1k 5% 1/10W
R238	1-216-049-91	s	METAL, CHIP 1k 5% 1/10W
R239	1-216-049-91	s	METAL, CHIP 1k 5% 1/10W
R240	1-216-049-91	s	METAL, CHIP 1k 5% 1/10W
R241	1-216-089-91	s	METAL, CHIP 47k 5% 1/10W
R242	1-216-049-91	s	METAL, CHIP 1k 5% 1/10W
R243	1-216-089-91	s	METAL, CHIP 47k 5% 1/10W
R244	1-216-073-00	s	METAL, CHIP 10k 5% 1/10W
R245	1-208-780-11	s	METAL, CHIP 820 0.5% 1/10W
R246	1-216-057-00	s	METAL, CHIP 2.2k 5% 1/10W
R247	1-208-782-11	s	METAL, CHIP 1k 0.5% 1/10W
R248	1-216-057-00	s	METAL, CHIP 2.2k 5% 1/10W
R249	1-208-774-11	s	METAL, CHIP 470 0.5% 1/10W
R250	1-208-770-11	s	METAL, CHIP 330 0.5% 1/10W

(IO-149 BOARD(For NTSC); Suffix -14)

Ref. No. or Q'ty	Part No.	SP	Description
R251	1-208-774-11	s	METAL, CHIP 470 0.5% 1/10W
R252	1-208-808-11	s	METAL, CHIP 12k 0.5% 1/10W
R253	1-208-814-11	s	METAL, CHIP 22k 0.5% 1/10W
R254	1-208-812-11	s	METAL, CHIP 18k 0.5% 1/10W
R255	1-208-814-11	s	METAL, CHIP 22k 0.5% 1/10W
R256	1-216-097-91	s	METAL, CHIP 100k 5% 1/10W
R257	1-216-089-91	s	METAL, CHIP 47k 5% 1/10W
R258	1-216-295-91	s	RES, CHIP 0
R259	1-208-799-11	s	METAL, CHIP 5.1k 0.5% 1/10W
R260	1-216-073-00	s	METAL, CHIP 10k 5% 1/10W
R261	1-216-049-91	s	METAL, CHIP 1k 5% 1/10W
R262	1-208-818-11	s	METAL, CHIP 33k 0.5% 1/10W
R263	1-216-065-91	s	METAL, CHIP 4.7k 5% 1/10W
R264	1-216-065-91	s	METAL, CHIP 4.7k 5% 1/10W
R265	1-216-049-91	s	METAL, CHIP 1k 5% 1/10W
R266	1-216-049-91	s	METAL, CHIP 1k 5% 1/10W
R267	1-216-049-91	s	METAL, CHIP 1k 5% 1/10W
R268	1-216-049-91	s	METAL, CHIP 1k 5% 1/10W
R269	1-216-057-00	s	METAL, CHIP 2.2k 5% 1/10W
R270	1-208-778-11	s	METAL, CHIP 680 0.5% 1/10W
R271	1-216-081-00	s	METAL, CHIP 22k 5% 1/10W
R272	1-208-797-11	s	METAL, CHIP 4.3k 0.5% 1/10W
R274	1-208-792-11	s	METAL, CHIP 2.7k 0.5% 1/10W
R275	1-216-057-00	s	METAL, CHIP 2.2k 5% 1/10W
R276	1-216-049-91	s	METAL, CHIP 1k 5% 1/10W
R277	1-216-081-00	s	METAL, CHIP 22k 5% 1/10W
R278	1-216-025-91	s	METAL, CHIP 100 5% 1/10W
R279	1-216-017-91	s	METAL, CHIP 47 5% 1/10W
R280	1-208-788-11	s	METAL, CHIP 1.8k 0.5% 1/10W
R281	1-216-073-00	s	METAL, CHIP 10k 5% 1/10W
R282	1-216-097-91	s	METAL, CHIP 100k 5% 1/10W
R283	1-216-081-00	s	METAL, CHIP 22k 5% 1/10W
R284	1-216-081-00	s	METAL, CHIP 22k 5% 1/10W
R285	1-216-081-00	s	METAL, CHIP 22k 5% 1/10W
R286	1-216-081-00	s	METAL, CHIP 22k 5% 1/10W
R301	1-216-065-91	s	METAL, CHIP 4.7k 5% 1/10W
R302	1-216-025-91	s	METAL, CHIP 100 5% 1/10W
R303	1-216-065-91	s	METAL, CHIP 4.7k 5% 1/10W
R304	1-216-049-91	s	METAL, CHIP 1k 5% 1/10W
R305	1-216-049-91	s	METAL, CHIP 1k 5% 1/10W
R306	1-216-033-00	s	METAL, CHIP 220 5% 1/10W
R307	1-216-057-00	s	METAL, CHIP 2.2k 5% 1/10W
R308	1-216-057-00	s	METAL, CHIP 2.2k 5% 1/10W
R309	1-216-049-91	s	METAL, CHIP 1k 5% 1/10W
R310	1-216-049-91	s	METAL, CHIP 1k 5% 1/10W
R311	1-208-790-11	s	METAL, CHIP 2.2k 0.5% 1/10W
R312	1-208-758-11	s	METAL, CHIP 100 0.5% 1/10W
R313	1-216-295-91	s	RES, CHIP 0
R314	1-208-792-11	s	METAL, CHIP 2.7k 0.5% 1/10W
R315	1-216-065-91	s	METAL, CHIP 4.7k 5% 1/10W
R316	1-216-025-91	s	METAL, CHIP 100 5% 1/10W
R317	1-208-778-11	s	METAL, CHIP 680 0.5% 1/10W
R318	1-216-017-91	s	METAL, CHIP 47 5% 1/10W
R319	1-208-788-11	s	METAL, CHIP 1.8k 0.5% 1/10W
R320	1-216-065-91	s	METAL, CHIP 4.7k 5% 1/10W
R321	1-216-025-91	s	METAL, CHIP 100 5% 1/10W
R322	1-208-774-11	s	METAL, CHIP 470 0.5% 1/10W
R323	1-208-784-11	s	METAL, CHIP 1.2k 0.5% 1/10W
R324	1-208-774-11	s	METAL, CHIP 470 0.5% 1/10W

(IO-149 BOARD(For NTSC); Suffix -14)

Ref. No. or Q'ty	Part No.	SP	Description
R325	1-208-774-11	s	METAL, CHIP 470 0.5% 1/10W
R326	1-208-778-11	s	METAL, CHIP 680 0.5% 1/10W
R327	1-216-065-91	s	METAL, CHIP 4.7k 5% 1/10W
R328	1-208-770-11	s	METAL, CHIP 330 0.5% 1/10W
R329	1-216-049-91	s	METAL, CHIP 1k 5% 1/10W
R330	1-216-033-00	s	METAL, CHIP 220 5% 1/10W
R331	1-216-049-91	s	METAL, CHIP 1k 5% 1/10W
R332	1-216-049-91	s	METAL, CHIP 1k 5% 1/10W
R333	1-216-049-91	s	METAL, CHIP 1k 5% 1/10W
R336	1-216-061-00	s	METAL, CHIP 3.3k 5% 1/10W
R337	1-216-081-00	s	METAL, CHIP 22k 5% 1/10W
R338	1-208-798-11	s	METAL, CHIP 4.7k 0.5% 1/10W
R339	1-216-049-91	s	METAL, CHIP 1k 5% 1/10W
R340	1-208-774-11	s	METAL, CHIP 470 0.5% 1/10W
R341	1-208-774-11	s	METAL, CHIP 470 0.5% 1/10W
R342	1-208-782-11	s	METAL, CHIP 1k 0.5% 1/10W
R343	1-216-053-00	s	METAL, CHIP 1.5k 5% 1/10W
R344	1-216-025-91	s	METAL, CHIP 100 5% 1/10W
R345	1-208-774-11	s	METAL, CHIP 470 0.5% 1/10W
R346	1-216-077-00	s	METAL, CHIP 15k 5% 1/10W
R347	1-216-057-00	s	METAL, CHIP 2.2k 5% 1/10W
R348	1-208-786-11	s	METAL, CHIP 1.5k 0.5% 1/10W
R349	1-216-025-91	s	METAL, CHIP 100 5% 1/10W
R350	1-208-774-11	s	METAL, CHIP 470 0.5% 1/10W
R351	1-216-057-00	s	METAL, CHIP 2.2k 5% 1/10W
R352	1-208-765-11	s	METAL, CHIP 200 0.5% 1/10W
R354	1-216-057-00	s	METAL, CHIP 2.2k 5% 1/10W
R357	1-208-786-11	s	METAL, CHIP 1.5k 0.5% 1/10W
R359	1-216-057-00	s	METAL, CHIP 2.2k 5% 1/10W
R361	1-208-782-11	s	METAL, CHIP 1k 0.5% 1/10W
R362	1-216-025-91	s	METAL, CHIP 100 5% 1/10W
R363	1-216-025-91	s	METAL, CHIP 100 5% 1/10W
R364	1-216-049-91	s	METAL, CHIP 1k 5% 1/10W
R365	1-216-025-91	s	METAL, CHIP 100 5% 1/10W
R366	1-208-782-11	s	METAL, CHIP 1k 0.5% 1/10W
R367	1-208-784-11	s	METAL, CHIP 1.2k 0.5% 1/10W
R368	1-216-049-91	s	METAL, CHIP 1k 5% 1/10W
R369	1-216-049-91	s	METAL, CHIP 1k 5% 1/10W
R370	1-208-782-11	s	METAL, CHIP 1k 0.5% 1/10W
R371	1-216-057-00	s	METAL, CHIP 2.2k 5% 1/10W
R372	1-216-049-91	s	METAL, CHIP 1k 5% 1/10W
R373	1-216-049-91	s	METAL, CHIP 1k 5% 1/10W
R374	1-208-784-11	s	METAL, CHIP 1.2k 0.5% 1/10W
R375	1-208-784-11	s	METAL, CHIP 1.2k 0.5% 1/10W
R376	1-216-049-91	s	METAL, CHIP 1k 5% 1/10W
R377	1-216-049-91	s	METAL, CHIP 1k 5% 1/10W
R378	1-216-065-91	s	METAL, CHIP 4.7k 5% 1/10W
R379	1-216-025-91	s	METAL, CHIP 100 5% 1/10W
R380	1-216-065-91	s	METAL, CHIP 4.7k 5% 1/10W
R381	1-216-025-91	s	METAL, CHIP 100 5% 1/10W
R382	1-216-053-00	s	METAL, CHIP 1.5k 5% 1/10W
R383	1-216-049-91	s	METAL, CHIP 1k 5% 1/10W
R384	1-216-049-91	s	METAL, CHIP 1k 5% 1/10W
R385	1-216-049-91	s	METAL, CHIP 1k 5% 1/10W
R386	1-216-049-91	s	METAL, CHIP 1k 5% 1/10W
R387	1-216-049-91	s	METAL, CHIP 1k 5% 1/10W
R388	1-216-049-91	s	METAL, CHIP 1k 5% 1/10W
R389	1-208-770-11	s	METAL, CHIP 330 0.5% 1/10W
R390	1-208-770-11	s	METAL, CHIP 330 0.5% 1/10W

(IO-149 BOARD(For NTSC); Suffix -14)

Ref. No. or Q'ty	Part No.	SP	Description
R391	1-216-057-00	s	METAL, CHIP 2.2k 5% 1/10W
R392	1-216-041-00	s	METAL, CHIP 470 5% 1/10W
R393	1-216-057-00	s	METAL, CHIP 2.2k 5% 1/10W
R394	1-216-025-91	s	METAL, CHIP 100 5% 1/10W
R395	1-216-025-91	s	METAL, CHIP 100 5% 1/10W
R396	1-216-025-91	s	METAL, CHIP 100 5% 1/10W
R397	1-216-025-91	s	METAL, CHIP 100 5% 1/10W
R398	1-216-055-00	s	METAL, CHIP 1.8k 5% 1/10W
R399	1-216-065-91	s	METAL, CHIP 4.7k 5% 1/10W
R400	1-216-065-91	s	METAL, CHIP 4.7k 5% 1/10W
R401	1-216-065-91	s	METAL, CHIP 4.7k 5% 1/10W
R402	1-216-065-91	s	METAL, CHIP 4.7k 5% 1/10W
R403	1-208-800-11	s	METAL, CHIP 5.6k 0.5% 1/10
R404	1-208-790-11	s	METAL, CHIP 2.2k 0.5% 1/10W
R405	1-216-113-00	s	METAL, CHIP 470k 5% 1/10W
R406	1-216-049-91	s	METAL, CHIP 1k 5% 1/10W
R407	1-216-049-91	s	METAL, CHIP 1k 5% 1/10W
R408	1-216-049-91	s	METAL, CHIP 1k 5% 1/10W
R409	1-216-057-00	s	METAL, CHIP 2.2k 5% 1/10W
R410	1-208-800-11	s	METAL, CHIP 5.6k 0.5% 1/10
R411	1-208-790-11	s	METAL, CHIP 2.2k 0.5% 1/10W
R412	1-216-055-00	s	METAL, CHIP 1.8k 5% 1/10W
R413	1-216-057-00	s	METAL, CHIP 2.2k 5% 1/10W
R414	1-216-017-91	s	METAL, CHIP 47 5% 1/10W
R415	1-216-017-91	s	METAL, CHIP 47 5% 1/10W
R416	1-216-073-00	s	METAL, CHIP 10k 5% 1/10W
R417	1-208-774-11	s	METAL, CHIP 470 0.5% 1/10W
R418	1-208-774-11	s	METAL, CHIP 470 0.5% 1/10W
R419	1-208-784-11	s	METAL, CHIP 1.2k 0.5% 1/10W
R420	1-208-774-11	s	METAL, CHIP 470 0.5% 1/10W
R421	1-216-041-00	s	METAL, CHIP 470 5% 1/10W
R422	1-208-784-11	s	METAL, CHIP 1.2k 0.5% 1/10W
R423	1-208-774-11	s	METAL, CHIP 470 0.5% 1/10W
R424	1-208-774-11	s	METAL, CHIP 470 0.5% 1/10W
R425	1-208-794-11	s	METAL, CHIP 3.3k 0.5% 1/10W
R426	1-208-794-11	s	METAL, CHIP 3.3k 0.5% 1/10W
R427	1-216-053-00	s	METAL, CHIP 1.5k 5% 1/10W
R428	1-208-782-11	s	METAL, CHIP 1k 0.5% 1/10W
R429	1-208-770-11	s	METAL, CHIP 330 0.5% 1/10W
R430	1-208-782-11	s	METAL, CHIP 1k 0.5% 1/10W
R431	1-208-770-11	s	METAL, CHIP 330 0.5% 1/10W
R432	1-216-065-91	s	METAL, CHIP 4.7k 5% 1/10W
R433	1-216-065-91	s	METAL, CHIP 4.7k 5% 1/10W
R434	1-208-782-11	s	METAL, CHIP 1k 0.5% 1/10W
R435	1-208-791-11	s	METAL, CHIP 2.4k 0.5% 1/10W
R436	1-216-049-91	s	METAL, CHIP 1k 5% 1/10W
R437	1-216-081-00	s	METAL, CHIP 22k 5% 1/10W
R438	1-208-784-11	s	METAL, CHIP 1.2k 0.5% 1/10W
R439	1-208-798-11	s	METAL, CHIP 4.7k 0.5% 1/10W
R440	1-208-782-11	s	METAL, CHIP 1k 0.5% 1/10W
R441	1-208-755-11	s	METAL, CHIP 75 0.5% 1/10W
R442	1-208-755-11	s	METAL, CHIP 75 0.5% 1/10W
R443	1-208-755-11	s	METAL, CHIP 75 0.5% 1/10W
R444	1-208-777-11	s	METAL, CHIP 620 0.5% 1/10W
R445	1-216-045-00	s	METAL, CHIP 680 5% 1/10W
R446	1-216-041-00	s	METAL, CHIP 470 5% 1/10W
R447	1-208-782-11	s	METAL, CHIP 1k 0.5% 1/10W
R448	1-216-041-00	s	METAL, CHIP 470 5% 1/10W
R449	1-208-791-11	s	METAL, CHIP 2.4k 0.5% 1/10W

(IO-149 BOARD(For NTSC); Suffix -14)

Ref. No. or Q'ty	Part No.	SP	Description
R450	1-208-755-11	s	METAL, CHIP 75 0.5% 1/10W
R451	1-216-097-91	s	METAL, CHIP 100k 5% 1/10W
R452	1-216-073-00	s	METAL, CHIP 10k 5% 1/10W
R453	1-216-081-00	s	METAL, CHIP 22k 5% 1/10W
R454	1-216-095-00	s	METAL, CHIP 82k 5% 1/10W
R455	1-216-073-00	s	METAL, CHIP 10k 5% 1/10W
R456	1-208-755-11	s	METAL, CHIP 75 0.5% 1/10W
R457	1-208-755-11	s	METAL, CHIP 75 0.5% 1/10W
R458	1-208-806-11	s	METAL, CHIP 10k 0.5% 1/10W
R459	1-208-755-11	s	METAL, CHIP 75 0.5% 1/10W
R501	1-216-089-91	s	METAL, CHIP 47k 5% 1/10W
R502	1-208-814-11	s	METAL, CHIP 22k 0.5% 1/10W
R503	1-208-790-11	s	METAL, CHIP 2.2k 0.5% 1/10W
R504	1-208-806-11	s	METAL, CHIP 10k 0.5% 1/10W
R505	1-208-806-11	s	METAL, CHIP 10k 0.5% 1/10W
R506	1-208-790-11	s	METAL, CHIP 2.2k 0.5% 1/10W
R507	1-216-295-91	s	RES, CHIP 0
R508	1-216-073-00	s	METAL, CHIP 10k 5% 1/10W
R509	1-208-800-11	s	METAL, CHIP 5.6k 0.5% 1/10
R510	1-208-806-11	s	METAL, CHIP 10k 0.5% 1/10W
R511	1-208-794-11	s	METAL, CHIP 3.3k 0.5% 1/10W
R512	1-208-802-11	s	METAL, CHIP 6.8k 0.5% 1/10W
R513	1-208-808-11	s	METAL, CHIP 12k 0.5% 1/10W
R515	1-216-057-00	s	METAL, CHIP 2.2k 5% 1/10W
R516	1-208-822-11	s	CHIP, METAL 47k 0.5% 1/10W
R517	1-208-808-11	s	METAL, CHIP 12k 0.5% 1/10W
R518	1-208-810-11	s	METAL, CHIP 15k 0.5% 1/10W
R519	1-208-802-11	s	METAL, CHIP 6.8k 0.5% 1/10W
R520	1-208-810-11	s	METAL, CHIP 15k 0.5% 1/10W
R521	1-216-089-91	s	METAL, CHIP 47k 5% 1/10W
R522	1-216-097-91	s	METAL, CHIP 100k 5% 1/10W
R523	1-216-089-91	s	METAL, CHIP 47k 5% 1/10W
R524	1-208-806-11	s	METAL, CHIP 10k 0.5% 1/10W
R525	1-208-782-11	s	METAL, CHIP 1k 0.5% 1/10W
R526	1-208-806-11	s	METAL, CHIP 10k 0.5% 1/10W
R527	1-208-796-11	s	METAL, CHIP 3.9k 0.5% 1/10W
R528	1-208-808-11	s	METAL, CHIP 12k 0.5% 1/10W
R529	1-216-049-91	s	METAL, CHIP 1k 5% 1/10W
R530	1-216-065-91	s	METAL, CHIP 4.7k 5% 1/10W
R531	1-216-049-91	s	METAL, CHIP 1k 5% 1/10W
R532	1-216-049-91	s	METAL, CHIP 1k 5% 1/10W
R533	1-208-808-11	s	METAL, CHIP 12k 0.5% 1/10W
R534	1-216-051-00	s	METAL, CHIP 1.2k 5% 1/10W
R535	1-208-806-11	s	METAL, CHIP 10k 0.5% 1/10W
R536	1-216-059-00	s	METAL, CHIP 2.7k 5% 1/10W
R537	1-208-774-11	s	METAL, CHIP 470 0.5% 1/10W
R538	1-208-810-11	s	METAL, CHIP 15k 0.5% 1/10W
R539	1-216-049-91	s	METAL, CHIP 1k 5% 1/10W
R540	1-216-057-00	s	METAL, CHIP 2.2k 5% 1/10W
R541	1-208-782-11	s	METAL, CHIP 1k 0.5% 1/10W
R542	1-216-057-00	s	METAL, CHIP 2.2k 5% 1/10W
R543	1-216-073-00	s	METAL, CHIP 10k 5% 1/10W
R544	1-208-782-11	s	METAL, CHIP 1k 0.5% 1/10W
R545	1-208-814-11	s	METAL, CHIP 22k 0.5% 1/10W
R546	1-216-057-00	s	METAL, CHIP 2.2k 5% 1/10W
R547	1-216-017-91	s	METAL, CHIP 47 5% 1/10W
R548	1-208-814-11	s	METAL, CHIP 22k 0.5% 1/10W
R549	1-208-797-11	s	METAL, CHIP 4.3k 0.5% 1/10W
R550	1-208-786-11	s	METAL, CHIP 1.5k 0.5% 1/10W

(IO-149 BOARD(For NTSC); Suffix -14)

Ref. No. or Q'ty	Part No.	SP	Description
R551	1-216-097-91	s	METAL, CHIP 100k 5% 1/10W
R552	1-216-059-00	s	METAL, CHIP 2.7k 5% 1/10W
R553	1-208-802-11	s	METAL, CHIP 6.8k 0.5% 1/10W
R554	1-208-786-11	s	METAL, CHIP 1.5k 0.5% 1/10W
R555	1-216-059-00	s	METAL, CHIP 2.7k 5% 1/10W
R556	1-216-073-00	s	METAL, CHIP 10k 5% 1/10W
R557	1-208-814-11	s	METAL, CHIP 22k 0.5% 1/10W
R558	1-216-017-91	s	METAL, CHIP 47 5% 1/10W
R559	1-208-818-11	s	METAL, CHIP 33k 0.5% 1/10W
R560	1-208-810-11	s	METAL, CHIP 15k 0.5% 1/10W
R561	1-208-814-11	s	METAL, CHIP 22k 0.5% 1/10W
R562	1-216-069-00	s	METAL, CHIP 6.8k 5% 1/10W
R563	1-208-818-11	s	METAL, CHIP 33k 0.5% 1/10W
R564	1-208-818-11	s	METAL, CHIP 33k 0.5% 1/10W
R565	1-216-047-91	s	METAL, CHIP 820 5% 1/10W
R566	1-216-049-91	s	METAL, CHIP 1k 5% 1/10W
R567	1-208-822-11	s	METAL, CHIP 47k 0.5% 1/10W
R568	1-216-025-91	s	METAL, CHIP 100 5% 1/10W
R569	1-216-041-00	s	METAL, CHIP 470 5% 1/10W
R570	1-208-800-11	s	METAL, CHIP 5.6k 0.5% 1/10
R571	1-216-081-00	s	METAL, CHIP 22k 5% 1/10W
R572	1-216-049-91	s	METAL, CHIP 1k 5% 1/10W
R573	1-216-059-00	s	METAL, CHIP 2.7k 5% 1/10W
R574	1-208-812-11	s	METAL, CHIP 18k 0.5% 1/10W
R575	1-216-041-00	s	METAL, CHIP 470 5% 1/10W
R576	1-208-755-11	s	METAL, CHIP 75 0.5% 1/10W
R577	1-208-818-11	s	METAL, CHIP 33k 0.5% 1/10W
R579	1-208-850-11	s	METAL, CHIP 680k 0.5% 1/10W
R580	1-216-017-91	s	METAL, CHIP 47 5% 1/10W
R581	1-216-025-91	s	METAL, CHIP 100 5% 1/10W
R582	1-216-061-00	s	METAL, CHIP 3.3k 5% 1/10W
R583	1-216-097-91	s	METAL, CHIP 100k 5% 1/10W
R584	1-216-017-91	s	METAL, CHIP 47 5% 1/10W
R585	1-216-049-91	s	METAL, CHIP 1k 5% 1/10W
R586	1-216-049-91	s	METAL, CHIP 1k 5% 1/10W
R587	1-216-049-91	s	METAL, CHIP 1k 5% 1/10W
R588	1-216-093-00	s	METAL, CHIP 68k 5% 1/10W
R589	1-216-049-91	s	METAL, CHIP 1k 5% 1/10W
R590	1-208-797-11	s	METAL, CHIP 4.3k 0.5% 1/10W
R591	1-216-045-00	s	METAL, CHIP 680 5% 1/10W
R592	1-216-081-00	s	METAL, CHIP 22k 5% 1/10W
R593	1-208-804-11	s	METAL, CHIP 8.2k 0.5% 1/10W
R594	1-216-025-91	s	METAL, CHIP 100 5% 1/10W
R595	1-216-025-91	s	METAL, CHIP 100 5% 1/10W
R596	1-208-774-11	s	METAL, CHIP 470 0.5% 1/10W
R597	1-208-774-11	s	METAL, CHIP 470 0.5% 1/10W
R601	1-216-089-91	s	METAL, CHIP 47k 5% 1/10W
R602	1-216-097-91	s	METAL, CHIP 100k 5% 1/10W
R604	1-216-097-91	s	METAL, CHIP 100k 5% 1/10W
R606	1-216-073-00	s	METAL, CHIP 10k 5% 1/10W
R607	1-216-065-91	s	METAL, CHIP 4.7k 5% 1/10W
R608	1-216-017-91	s	METAL, CHIP 47 5% 1/10W
R609	1-216-295-91	s	RES, CHIP 0
R610	1-216-049-91	s	METAL, CHIP 1k 5% 1/10W
R612	1-216-085-00	s	METAL, CHIP 33k 5% 1/10W
R613	1-216-065-91	s	METAL, CHIP 4.7k 5% 1/10W
R614	1-216-073-00	s	METAL, CHIP 10k 5% 1/10W
R616	1-216-017-91	s	METAL, CHIP 47 5% 1/10W
R617	1-216-085-00	s	METAL, CHIP 33k 5% 1/10W

(IO-149 BOARD(For NTSC); Suffix -14)

Ref. No. or Q'ty	Part No.	SP	Description
R618	1-216-085-00	s	METAL, CHIP 33k 5% 1/10W
R619	1-208-789-11	s	METAL, CHIP 2k 0.5% 1/10W
R620	1-216-051-00	s	METAL, CHIP 1.2k 5% 1/10W
R621	1-208-789-11	s	METAL, CHIP 2k 0.5% 1/10W
R622	1-216-051-00	s	METAL, CHIP 1.2k 5% 1/10W
R623	1-208-774-11	s	METAL, CHIP 470 0.5% 1/10W
R624	1-216-037-00	s	METAL, CHIP 330 5% 1/10W
R625	1-216-648-11	s	METAL, CHIP 750 0.5% 1/10W
R626	1-216-037-00	s	METAL, CHIP 330 5% 1/10W
R627	1-216-071-00	s	METAL, CHIP 8.2k 5% 1/10W
R628	1-208-817-11	s	METAL, CHIP 30k 0.5% 1/10W
R629	1-216-069-00	s	METAL, CHIP 6.8k 5% 1/10W
R630	1-208-817-11	s	METAL, CHIP 30k 0.5% 1/10W
R631	1-216-041-00	s	METAL, CHIP 470 5% 1/10W
R632	1-216-041-00	s	METAL, CHIP 470 5% 1/10W
R633	1-216-017-91	s	METAL, CHIP 47 5% 1/10W
R634	1-216-097-91	s	METAL, CHIP 100k 5% 1/10W
R635	1-208-798-11	s	METAL, CHIP 4.7k 0.5% 1/10W
R637	1-216-115-00	s	METAL, CHIP 560k 5% 1/10W
R638	1-208-772-11	s	METAL, CHIP 390 0.5% 1/10W
R639	1-216-017-91	s	METAL, CHIP 47 5% 1/10W
R640	1-208-798-11	s	METAL, CHIP 4.7k 0.5% 1/10W
R641	1-208-772-11	s	METAL, CHIP 390 0.5% 1/10W
R642	1-208-796-11	s	METAL, CHIP 3.9k 0.5% 1/10W
R643	1-208-808-11	s	METAL, CHIP 12k 0.5% 1/10W
R644	1-208-769-11	s	METAL, CHIP 300 0.5% 1/10W
R645	1-208-769-11	s	METAL, CHIP 300 0.5% 1/10W
R646	1-216-049-91	s	METAL, CHIP 1k 5% 1/10W
R647	1-216-049-91	s	METAL, CHIP 1k 5% 1/10W
R648	1-216-037-00	s	METAL, CHIP 330 5% 1/10W
R649	1-216-037-00	s	METAL, CHIP 330 5% 1/10W
R650	1-216-049-91	s	METAL, CHIP 1k 5% 1/10W
R651	1-216-049-91	s	METAL, CHIP 1k 5% 1/10W
R652	1-216-025-91	s	METAL, CHIP 100 5% 1/10W
R653	1-216-025-91	s	METAL, CHIP 100 5% 1/10W
R654	1-216-025-91	s	METAL, CHIP 100 5% 1/10W
R655	1-216-049-91	s	METAL, CHIP 1k 5% 1/10W
R656	1-216-049-91	s	METAL, CHIP 1k 5% 1/10W
R657	1-216-025-91	s	METAL, CHIP 100 5% 1/10W
R658	1-216-025-91	s	METAL, CHIP 100 5% 1/10W
R659	1-216-049-91	s	METAL, CHIP 1k 5% 1/10W
RB101	1-239-999-11	s	RESISTOR BLOCK, CHIP 1k x 4
RB102	1-239-998-11	s	RESISTOR BLOCK, CHIP 100 x 4
RB103	1-233-237-11	s	RESISTOR BLOCK, CHIP 100k x 4
RB701	1-233-234-11	s	RESISTOR BLOCK, CHIP 2.2k x 4
RV101	1-237-034-11	s	RES, ADJ, METAL 2k
RV102	1-237-034-11	s	RES, ADJ, METAL 2k
RV103	1-237-034-11	s	RES, ADJ, METAL 2k
RV104	1-237-034-11	s	RES, ADJ, METAL 2k
RV105	1-237-035-11	s	RES, ADJ, METAL 5k
RV106	1-237-035-11	s	RES, ADJ, METAL 5k
RV107	1-237-036-11	s	RES, ADJ, METAL 10k
RV108	1-237-036-11	s	RES, ADJ, METAL 10k
RV109	1-237-036-11	s	RES, ADJ, METAL 10k
RV110	1-237-035-11	s	RES, ADJ, METAL 5k
RV111	1-237-035-11	s	RES, ADJ, METAL 5k
RV112	1-237-034-11	s	RES, ADJ, METAL 2k
RV301	1-237-033-11	s	RES, ADJ, METAL 1k

(IO-149 BOARD(For NTSC); Suffix -14)

Ref. No. or Q'ty	Part No.	SP	Description
RV302	1-237-034-11	s	RES, ADJ, METAL 2k
RV303	1-237-032-11	s	RES, ADJ, METAL 500
RV304	1-237-033-11	s	RES, ADJ, METAL 1k
RV305	1-237-035-11	s	RES, ADJ, METAL 5k
RV306	1-237-033-11	s	RES, ADJ, METAL 1k
RV307	1-237-033-11	s	RES, ADJ, METAL 1k
RV308	1-237-032-11	s	RES, ADJ, METAL 500
RV309	1-237-034-11	s	RES, ADJ, METAL 2k
RV310	1-237-034-11	s	RES, ADJ, METAL 2k
RV311	1-237-032-11	s	RES, ADJ, METAL 500
RV312	1-237-035-11	s	RES, ADJ, METAL 5k
RV313	1-237-035-11	s	RES, ADJ, METAL 5k
RV314	1-237-032-11	s	RES, ADJ, METAL 500
RV315	1-237-032-11	s	RES, ADJ, METAL 500
RV316	1-237-033-11	s	RES, ADJ, METAL 1k
RV317	1-237-033-11	s	RES, ADJ, METAL 1k
RV318	1-237-030-11	s	RES, ADJ, METAL 100
RV319	1-237-030-11	s	RES, ADJ, METAL 100
RV501	1-237-035-11	s	RES, ADJ, METAL 5k
RV502	1-237-036-11	s	RES, ADJ, METAL 10k
RV503	1-237-037-11	s	RES, ADJ, METAL 20k
RV504	1-237-036-11	s	RES, ADJ, METAL 10k
RV505	1-237-034-11	s	RES, ADJ, METAL 2k
RV506	1-237-033-11	s	RES, ADJ, METAL 1k
RV601	1-237-035-11	s	RES, ADJ, METAL 5k
TH101	1-809-352-11	s	THERMISTOR, CHIP 1.5k
X101	1-767-260-11	s	CRYSTAL 13.50MHz
X102	1-767-260-11	s	CRYSTAL 13.50MHz
X103	1-767-260-11	s	CRYSTAL 13.50MHz
X601	1-767-262-11	s	CRYSTAL 27.00MHz
X602	1-527-722-00	s	CRYSTAL 14.31818MHZ

IO-149 BOARD(For NTSC); Suffix -13

This list corresponds to the board suffix number -13.

The parts marked * are different, depending on the product serial numbers, as shown below:
*1) Serial number; 10001 through 10620 (For DSR-60 J)
Serial number; 10001 through 10540 (For DSR-60 UC)
*2) Serial number; 10621 and higher (For DSR-60 J)
Serial number; 10541 and higher (For DSR-60 UC)

Ref. No. or Q'ty	Part No.	SP	Description
1pc	A-8312-954-A	o	MOUNTED CIRCUIT BOARD, IO-149B
1pc	7-621-759-45	s	+PSW, 2.6x6
1pc	3-179-085-01	s	LEVER (L), PRINTED CIRCUIT BOARD
1pc	3-179-084-01	s	LEVER (R), PRINTED CIRCUIT BOARD
C1	1-126-392-11	s	ELECT, CHIP 100uF 20% 6.3V
C2	1-163-038-91	s	CERAMIC, CHIP 0.1uF 25V
C3	1-126-392-11	s	ELECT, CHIP 100uF 20% 6.3V
C4	1-163-038-91	s	CERAMIC, CHIP 0.1uF 25V
C5	1-126-392-11	s	ELECT, CHIP 100uF 20% 6.3V
C6	1-163-038-91	s	CERAMIC, CHIP 0.1uF 25V
C11	1-126-396-11	s	ELECT, CHIP 47uF 20% 16V
C12	1-163-038-91	s	CERAMIC, CHIP 0.1uF 25V
C13	1-126-396-11	s	ELECT, CHIP 47uF 20% 16V
C14	1-163-038-91	s	CERAMIC, CHIP 0.1uF 25V
C15	1-126-396-11	s	ELECT, CHIP 47uF 20% 16V
C16	1-163-038-91	s	CERAMIC, CHIP 0.1uF 25V
C21	1-126-396-11	s	ELECT, CHIP 47uF 20% 16V
C22	1-163-038-91	s	CERAMIC, CHIP 0.1uF 25V
C23	1-126-396-11	s	ELECT, CHIP 47uF 20% 16V
C24	1-163-038-91	s	CERAMIC, CHIP 0.1uF 25V
C25	1-126-396-11	s	ELECT, CHIP 47uF 20% 16V
C26	1-163-038-91	s	CERAMIC, CHIP 0.1uF 25V
C31	1-126-396-11	s	ELECT, CHIP 47uF 20% 16V
C32	1-163-038-91	s	CERAMIC, CHIP 0.1uF 25V
C33	1-126-396-11	s	ELECT, CHIP 47uF 20% 16V
C34	1-163-038-91	s	CERAMIC, CHIP 0.1uF 25V
C35	1-126-396-11	s	ELECT, CHIP 47uF 20% 16V
C36	1-163-038-91	s	CERAMIC, CHIP 0.1uF 25V
C37	1-126-396-11	s	ELECT, CHIP 47uF 20% 16V
C38	1-163-038-91	s	CERAMIC, CHIP 0.1uF 25V
C39	1-126-396-11	s	ELECT, CHIP 47uF 20% 16V
C40	1-163-038-91	s	CERAMIC, CHIP 0.1uF 25V
C101	1-164-004-11	s	CERAMIC, CHIP 0.1uF 10% 25V
C102	1-163-037-11	s	CERAMIC, CHIP 0.022uF 10% 25V
C103	1-126-396-11	s	ELECT, CHIP 47uF 20% 16V
C104	1-163-037-11	s	CERAMIC, CHIP 0.022uF 10% 25V
C105	1-163-037-11	s	CERAMIC, CHIP 0.022uF 10% 25V
C106	1-163-037-11	s	CERAMIC, CHIP 0.022uF 10% 25V
C107	1-163-037-11	s	CERAMIC, CHIP 0.022uF 10% 25V
C108	1-163-235-11	s	CERAMIC, CHIP 22pF 5% 50V
C109	1-163-037-11	s	CERAMIC, CHIP 0.022uF 10% 25V
C110	1-164-004-11	s	CERAMIC, CHIP 0.1uF 10% 25V
C111	1-164-004-11	s	CERAMIC, CHIP 0.1uF 10% 25V
C112	1-163-275-11	s	CERAMIC, CHIP 0.001uF 5% 50V
C113	1-163-275-11	s	CERAMIC, CHIP 0.001uF 5% 50V
C114	1-164-004-11	s	CERAMIC, CHIP 0.1uF 10% 25V
C115	1-164-004-11	s	CERAMIC, CHIP 0.1uF 10% 25V
C116	1-163-275-11	s	CERAMIC, CHIP 0.001uF 5% 50V
C117	1-163-275-11	s	CERAMIC, CHIP 0.001uF 5% 50V
C118	1-163-237-11	s	CERAMIC, CHIP 27pF 5% 50V

(IO-149 BOARD(For NTSC); Suffix -13)

Ref. No. or Q'ty	Part No.	SP	Description	
C119	1-163-237-11	s	CERAMIC, CHIP 27pF 5% 50V	
C120	1-163-037-11	s	CERAMIC, CHIP 0.022uF 10% 25V	
C121	1-163-037-11	s	CERAMIC, CHIP 0.022uF 10% 25V	
C122	1-163-037-11	s	CERAMIC, CHIP 0.022uF 10% 25V	
C123	1-164-004-11	s	CERAMIC, CHIP 0.1uF 10% 25V	
C124	1-163-037-11	s	CERAMIC, CHIP 0.022uF 10% 25V	
C125	1-126-392-11	s	ELECT, CHIP 100uF 20% 6.3V	
C126	1-163-275-11	s	CERAMIC, CHIP 0.001uF 5% 50V	
C127	1-164-004-11	s	CERAMIC, CHIP 0.1uF 10% 25V	
C128	1-163-037-11	s	CERAMIC, CHIP 0.022uF 10% 25V	
C129	1-163-037-11	s	CERAMIC, CHIP 0.022uF 10% 25V	
C130	1-163-275-11	s	CERAMIC, CHIP 0.001uF 5% 50V	
C131	1-163-037-11	s	CERAMIC, CHIP 0.022uF 10% 25V	
C132	1-163-037-11	s	CERAMIC, CHIP 0.022uF 10% 25V	
C133	1-163-237-11	s	CERAMIC, CHIP 27pF 5% 50V	
C134	1-126-394-11	s	ELECT, CHIP 10uF 20% 16V	
C135	1-126-394-11	s	ELECT, CHIP 10uF 20% 16V	
C136	1-163-037-11	s	CERAMIC, CHIP 0.022uF 10% 25V	
C137	1-163-037-11	s	CERAMIC, CHIP 0.022uF 10% 25V	
C138	1-163-037-11	s	CERAMIC, CHIP 0.022uF 10% 25V	
C139	1-163-037-11	s	CERAMIC, CHIP 0.022uF 10% 25V	
C140	1-163-037-11	s	CERAMIC, CHIP 0.022uF 10% 25V	
C141	1-163-037-11	s	CERAMIC, CHIP 0.022uF 10% 25V	
C142	1-126-392-11	s	ELECT, CHIP 100uF 20% 6.3V	
C143	1-126-392-11	s	ELECT, CHIP 100uF 20% 6.3V	
C144	1-163-037-11	s	CERAMIC, CHIP 0.022uF 10% 25V	
C145	1-163-037-11	s	CERAMIC, CHIP 0.022uF 10% 25V	
C146	1-163-037-11	s	CERAMIC, CHIP 0.022uF 10% 25V	
C147	1-163-037-11	s	CERAMIC, CHIP 0.022uF 10% 25V	
C148	1-163-037-11	s	CERAMIC, CHIP 0.022uF 10% 25V	
C149	1-163-037-11	s	CERAMIC, CHIP 0.022uF 10% 25V	
C150	1-163-037-11	s	CERAMIC, CHIP 0.022uF 10% 25V	
C151	1-163-037-11	s	CERAMIC, CHIP 0.022uF 10% 25V	
C152	1-163-037-11	s	CERAMIC, CHIP 0.022uF 10% 25V	
C153	1-126-391-11	s	ELECT, CHIP 47uF 20% 6.3V	
C154	1-163-231-11	s	CERAMIC, CHIP 15pF 5% 50V	
C155	1-163-037-11	s	CERAMIC, CHIP 0.022uF 10% 25V	
C156	1-163-038-91	s	CERAMIC, CHIP 0.1uF 25V	
C157	1-163-037-11	s	CERAMIC, CHIP 0.022uF 10% 25V	
C158	1-163-037-11	s	CERAMIC, CHIP 0.022uF 10% 25V	
C159	1-163-038-91	s	CERAMIC, CHIP 0.1uF 25V	
C160	1-163-037-11	s	CERAMIC, CHIP 0.022uF 10% 25V	
C161	1-163-037-11	s	CERAMIC, CHIP 0.022uF 10% 25V	
C162	1-163-038-91	s	CERAMIC, CHIP 0.1uF 25V	
C163	1-163-038-91	s	CERAMIC, CHIP 0.1uF 25V	
C164	1-163-038-91	s	CERAMIC, CHIP 0.1uF 25V	
C165	1-126-391-11	s	ELECT, CHIP 47uF 20% 6.3V	
C166	1-163-037-11	s	CERAMIC, CHIP 0.022uF 10% 25V	
C167	1-126-391-11	s	ELECT, CHIP 47uF 20% 6.3V	
C168	1-163-037-11	s	CERAMIC, CHIP 0.022uF 10% 25V	
C169	1-163-037-11	s	CERAMIC, CHIP 0.022uF 10% 25V	
C170	1-163-037-11	s	CERAMIC, CHIP 0.022uF 10% 25V	
C171	1-126-391-11	s	ELECT, CHIP 47uF 20% 6.3V	
C172	1-126-396-11	s	ELECT, CHIP 47uF 20% 16V	
C173	1-126-396-11	s	ELECT, CHIP 47uF 20% 16V	
C174	1-126-391-11	s	ELECT, CHIP 47uF 20% 6.3V	
C175	1-126-391-11	s	ELECT, CHIP 47uF 20% 6.3V	
C176	1-126-391-11	s	ELECT, CHIP 47uF 20% 6.3V	
C177	1-126-391-11	s	ELECT, CHIP 47uF 20% 6.3V	

(IO-149 BOARD(For NTSC); Suffix -13)

Ref. No. or Q'ty	Part No.	SP	Description	
C178	1-126-391-11	s	ELECT, CHIP 47uF 20% 6.3V	
C179	1-163-037-11	s	CERAMIC, CHIP 0.022uF 10% 25V	
C180	1-163-037-11	s	CERAMIC, CHIP 0.022uF 10% 25V	
C181	1-163-037-11	s	CERAMIC, CHIP 0.022uF 10% 25V	
C182	1-163-037-11	s	CERAMIC, CHIP 0.022uF 10% 25V	
C183	1-163-037-11	s	CERAMIC, CHIP 0.022uF 10% 25V	
C184	1-163-037-11	s	CERAMIC, CHIP 0.022uF 10% 25V	
C185	1-163-037-11	s	CERAMIC, CHIP 0.022uF 10% 25V	
C186	1-163-037-11	s	CERAMIC, CHIP 0.022uF 10% 25V	
C187	1-163-037-11	s	CERAMIC, CHIP 0.022uF 10% 25V	
C188	1-163-235-11	s	CERAMIC, CHIP 22pF 5% 50V	
C189	1-163-235-11	s	CERAMIC, CHIP 22pF 5% 50V	
C190	1-163-231-11	s	CERAMIC, CHIP 15pF 5% 50V	*1)
	1-163-099-00	s	CERAMIC, CHIP 18pF 5% 50V	*2)
C191	1-163-037-11	s	CERAMIC, CHIP 0.022uF 10% 25V	
C192	1-163-037-11	s	CERAMIC, CHIP 0.022uF 10% 25V	
C193	1-163-037-11	s	CERAMIC, CHIP 0.022uF 10% 25V	
C194	1-126-401-11	s	ELECT, CHIP 1uF 20% 50V	
C195	1-126-401-11	s	ELECT, CHIP 1uF 20% 50V	
C196	1-126-394-11	s	ELECT, CHIP 10uF 20% 16V	
C197	1-126-401-11	s	ELECT, CHIP 1uF 20% 50V	
C198	1-126-394-11	s	ELECT, CHIP 10uF 20% 16V	
C199	1-163-038-91	s	CERAMIC, CHIP 0.1uF 25V	
C200	1-126-401-11	s	ELECT, CHIP 1uF 20% 50V	
C201	1-163-038-91	s	CERAMIC, CHIP 0.1uF 25V	
C202	1-163-809-11	s	CERAMIC, CHIP 0.047uF 10% 25V	
C203	1-163-809-11	s	CERAMIC, CHIP 0.047uF 10% 25V	
C204	1-163-809-11	s	CERAMIC, CHIP 0.047uF 10% 25V	
C205	1-163-227-11	s	CERAMIC, CHIP 10pF 5% 50V	
C206	1-163-037-11	s	CERAMIC, CHIP 0.022uF 10% 25V	
C207	1-163-037-11	s	CERAMIC, CHIP 0.022uF 10% 25V	
C208	1-163-037-11	s	CERAMIC, CHIP 0.022uF 10% 25V	
C209	1-163-037-11	s	CERAMIC, CHIP 0.022uF 10% 25V	
C210	1-163-037-11	s	CERAMIC, CHIP 0.022uF 10% 25V	
C211	1-126-396-11	s	ELECT, CHIP 47uF 20% 16V	
C212	1-163-037-11	s	CERAMIC, CHIP 0.022uF 10% 25V	
C213	1-163-227-11	s	CERAMIC, CHIP 10pF 5% 50V	*1)
	1-163-235-11	s	CERAMIC, CHIP 22pF 5% 50V	*2)
C214	1-163-037-11	s	CERAMIC, CHIP 0.022uF 10% 25V	
C215	1-126-396-11	s	ELECT, CHIP 47uF 20% 16V	
C216	1-163-037-11	s	CERAMIC, CHIP 0.022uF 10% 25V	
C217	1-126-390-11	s	ELECT, CHIP 22uF 20% 6.3V	
C218	1-163-037-11	s	CERAMIC, CHIP 0.022uF 10% 25V	
C219	1-163-037-11	s	CERAMIC, CHIP 0.022uF 10% 25V	
C220	1-163-249-11	s	CERAMIC, CHIP 82pF 5% 50V	
C221	1-163-243-11	s	CERAMIC, CHIP 47pF 5% 50V	
C222	1-163-227-11	s	CERAMIC, CHIP 10pF 5% 50V	
C223	1-163-118-00	s	CERAMIC, CHIP 110pF 5% 50V	
C224	1-163-037-11	s	CERAMIC, CHIP 0.022uF 10% 25V	
C225	1-163-224-11	s	CERAMIC, CHIP 7pF 50V	
C226	1-163-037-11	s	CERAMIC, CHIP 0.022uF 10% 25V	
C228	1-163-231-11	s	CERAMIC, CHIP 15pF 5% 50V	
C229	1-163-259-91	s	CERAMIC, CHIP 220pF 5% 50V	
C230	1-126-390-11	s	ELECT, CHIP 22uF 20% 6.3V	
C231	1-163-037-11	s	CERAMIC, CHIP 0.022uF 10% 25V	
C232	1-163-037-11	s	CERAMIC, CHIP 0.022uF 10% 25V	
C233	1-163-037-11	s	CERAMIC, CHIP 0.022uF 10% 25V	

(IO-149 BOARD(For NTSC); Suffix -13)

Ref. No. or Q'ty	Part No.	SP	Description
C234	1-163-037-11	s	CERAMIC, CHIP 0.022uF 10% 25V
C235	1-163-227-11	s	CERAMIC, CHIP 10pF 5% 50V
C301	1-126-391-11	s	ELECT, CHIP 47uF 20% 6.3V
C302	1-126-391-11	s	ELECT, CHIP 47uF 20% 6.3V
C303	1-163-038-91	s	CERAMIC, CHIP 0.1uF 25V
C304	1-126-391-11	s	ELECT, CHIP 47uF 20% 6.3V
C305	1-126-391-11	s	ELECT, CHIP 47uF 20% 6.3V
C306	1-163-038-91	s	CERAMIC, CHIP 0.1uF 25V
C307	1-163-038-91	s	CERAMIC, CHIP 0.1uF 25V
C308	1-163-038-91	s	CERAMIC, CHIP 0.1uF 25V
C309	1-163-231-11	s	CERAMIC, CHIP 15pF 5% 50V
C310	1-163-037-11	s	CERAMIC, CHIP 0.022uF 10% 25V
C311	1-163-120-00	s	CERAMIC, CHIP 130pF 5% 50V
C312	1-163-037-11	s	CERAMIC, CHIP 0.022uF 10% 25V
C313	1-163-038-91	s	CERAMIC, CHIP 0.1uF 25V
C314	1-163-038-91	s	CERAMIC, CHIP 0.1uF 25V
C315	1-163-037-11	s	CERAMIC, CHIP 0.022uF 10% 25V
C316	1-163-037-11	s	CERAMIC, CHIP 0.022uF 10% 25V
C317	1-163-037-11	s	CERAMIC, CHIP 0.022uF 10% 25V
C318	1-163-231-11	s	CERAMIC, CHIP 15pF 5% 50V
C319	1-163-120-00	s	CERAMIC, CHIP 130pF 5% 50V
C320	1-163-037-11	s	CERAMIC, CHIP 0.022uF 10% 25V
C321	1-126-391-11	s	ELECT, CHIP 47uF 20% 6.3V
C324	1-163-038-91	s	CERAMIC, CHIP 0.1uF 25V
C326	1-126-396-11	s	ELECT, CHIP 47uF 20% 16V
C327	1-126-391-11	s	ELECT, CHIP 47uF 20% 6.3V
C328	1-163-037-11	s	CERAMIC, CHIP 0.022uF 10% 25V
C329	1-126-396-11	s	ELECT, CHIP 47uF 20% 16V
C330	1-163-037-11	s	CERAMIC, CHIP 0.022uF 10% 25V
C331	1-126-396-11	s	ELECT, CHIP 47uF 20% 16V
C332	1-163-038-91	s	CERAMIC, CHIP 0.1uF 25V
C333	1-163-038-91	s	CERAMIC, CHIP 0.1uF 25V
C334	1-163-224-11	s	CERAMIC, CHIP 7pF 50V
C335	1-163-231-11	s	CERAMIC, CHIP 15pF 5% 50V
C336	1-163-037-11	s	CERAMIC, CHIP 0.022uF 10% 25V
C337	1-163-231-11	s	CERAMIC, CHIP 15pF 5% 50V
C338	1-163-038-91	s	CERAMIC, CHIP 0.1uF 25V
C339	1-163-243-11	s	CERAMIC, CHIP 47pF 5% 50V
C340	1-163-243-11	s	CERAMIC, CHIP 47pF 5% 50V
C341	1-163-239-11	s	CERAMIC, CHIP 33pF 5% 50V
C342	1-163-239-11	s	CERAMIC, CHIP 33pF 5% 50V
C343	1-126-392-11	s	ELECT, CHIP 100uF 20% 6.3V
C344	1-163-235-11	s	CERAMIC, CHIP 22pF 5% 50V
C345	1-163-235-11	s	CERAMIC, CHIP 22pF 5% 50V
C346	1-126-394-11	s	ELECT, CHIP 10uF 20% 16V
C347	1-126-394-11	s	ELECT, CHIP 10uF 20% 16V
C348	1-126-391-11	s	ELECT, CHIP 47uF 20% 6.3V
C349	1-163-809-11	s	CERAMIC, CHIP 0.047uF 10% 25V
C350	1-126-391-11	s	ELECT, CHIP 47uF 20% 6.3V
C351	1-163-038-91	s	CERAMIC, CHIP 0.1uF 25V
C352	1-163-037-11	s	CERAMIC, CHIP 0.022uF 10% 25V
C353	1-163-037-11	s	CERAMIC, CHIP 0.022uF 10% 25V
C354	1-163-038-91	s	CERAMIC, CHIP 0.1uF 25V
C355	1-163-227-11	s	CERAMIC, CHIP 10pF 5% 50V
C356	1-163-037-11	s	CERAMIC, CHIP 0.022uF 10% 25V
C357	1-163-037-11	s	CERAMIC, CHIP 0.022uF 10% 25V
C358	1-163-037-11	s	CERAMIC, CHIP 0.022uF 10% 25V
C359	1-163-038-91	s	CERAMIC, CHIP 0.1uF 25V
C360	1-163-038-91	s	CERAMIC, CHIP 0.1uF 25V

(IO-149 BOARD(For NTSC); Suffix -13)

Ref. No. or Q'ty	Part No.	SP	Description	
C361	1-163-038-91	s	CERAMIC, CHIP 0.1uF 25V	
C362	1-163-243-11	s	CERAMIC, CHIP 47pF 5% 50V	
C363	1-163-037-11	s	CERAMIC, CHIP 0.022uF 10% 25V	
C364	1-163-037-11	s	CERAMIC, CHIP 0.022uF 10% 25V	
C365	1-163-222-11	s	CERAMIC, CHIP 5pF 50V	
C366	1-163-037-11	s	CERAMIC, CHIP 0.022uF 10% 25V	
C367	1-163-243-11	s	CERAMIC, CHIP 47pF 5% 50V	
C368	1-163-037-11	s	CERAMIC, CHIP 0.022uF 10% 25V	
C369	1-163-037-11	s	CERAMIC, CHIP 0.022uF 10% 25V	
C370	1-163-037-11	s	CERAMIC, CHIP 0.022uF 10% 25V	
C371	1-163-037-11	s	CERAMIC, CHIP 0.022uF 10% 25V	
C372	1-163-037-11	s	CERAMIC, CHIP 0.022uF 10% 25V	
C373	1-126-391-11	s	ELECT, CHIP 47uF 20% 6.3V	
C374	1-163-037-11	s	CERAMIC, CHIP 0.022uF 10% 25V	
C375	1-163-037-11	s	CERAMIC, CHIP 0.022uF 10% 25V	
C376	1-163-037-11	s	CERAMIC, CHIP 0.022uF 10% 25V	
C377	1-126-391-11	s	ELECT, CHIP 47uF 20% 6.3V	
C378	1-126-396-11	s	ELECT, CHIP 47uF 20% 16V	
C379	1-163-037-11	s	CERAMIC, CHIP 0.022uF 10% 25V	
C380	1-163-037-11	s	CERAMIC, CHIP 0.022uF 10% 25V	
C381	1-163-227-11	s	CERAMIC, CHIP 10pF 5% 50V	
C382	1-163-037-11	s	CERAMIC, CHIP 0.022uF 10% 25V	
C383	1-163-227-11	s	CERAMIC, CHIP 10pF 5% 50V	
C384	1-163-037-11	s	CERAMIC, CHIP 0.022uF 10% 25V	
C385	1-163-038-91	s	CERAMIC, CHIP 0.1uF 25V	
C386	1-163-038-91	s	CERAMIC, CHIP 0.1uF 25V	
C387	1-163-037-11	s	CERAMIC, CHIP 0.022uF 10% 25V	
C388	1-163-113-00	s	CERAMIC, CHIP 68pF 5% 50V	*1)
	1-163-245-11	s	CERAMIC, CHIP 56pF 5% 50V	*2)
C501	1-163-235-11	s	CERAMIC, CHIP 22pF 5% 50V	
C502	1-163-038-91	s	CERAMIC, CHIP 0.1uF 25V	
C503	1-126-394-11	s	ELECT, CHIP 10uF 20% 16V	
C504	1-126-394-11	s	ELECT, CHIP 10uF 20% 16V	
C505	1-126-394-11	s	ELECT, CHIP 10uF 20% 16V	
C506	1-163-037-11	s	CERAMIC, CHIP 0.022uF 10% 25V	
C507	1-126-396-11	s	ELECT, CHIP 47uF 20% 16V	
C508	1-126-396-11	s	ELECT, CHIP 47uF 20% 16V	
C509	1-126-394-11	s	ELECT, CHIP 10uF 20% 16V	
C510	1-126-394-11	s	ELECT, CHIP 10uF 20% 16V	
C511	1-126-401-11	s	ELECT, CHIP 1uF 20% 50V	
C512	1-163-235-11	s	CERAMIC, CHIP 22pF 5% 50V	
C513	1-164-222-11	s	CERAMIC, CHIP 0.22uF 25V	
C514	1-163-038-91	s	CERAMIC, CHIP 0.1uF 25V	
C515	1-163-038-91	s	CERAMIC, CHIP 0.1uF 25V	
C516	1-163-121-00	s	CERAMIC, CHIP 150pF 5% 50V	
C517	1-164-232-11	s	CERAMIC, CHIP 0.01uF 10% 100V	
C518	1-163-037-11	s	CERAMIC, CHIP 0.022uF 10% 25V	
C519	1-163-038-91	s	CERAMIC, CHIP 0.1uF 25V	
C520	1-163-038-91	s	CERAMIC, CHIP 0.1uF 25V	
C521	1-126-396-11	s	ELECT, CHIP 47uF 20% 16V	
C522	1-126-393-11	s	ELECT, CHIP 33uF 20% 10V	
C523	1-163-038-91	s	CERAMIC, CHIP 0.1uF 25V	
C524	1-163-239-11	s	CERAMIC, CHIP 33pF 5% 50V	
C525	1-163-259-91	s	CERAMIC, CHIP 220pF 5% 50V	
C526	1-163-038-91	s	CERAMIC, CHIP 0.1uF 25V	
C527	1-163-037-11	s	CERAMIC, CHIP 0.022uF 10% 25V	
C528	1-163-038-91	s	CERAMIC, CHIP 0.1uF 25V	
C529	1-163-037-11	s	CERAMIC, CHIP 0.022uF 10% 25V	

(IO-149 BOARD(For NTSC); Suffix -13)

Ref. No. or Q'ty	Part No.	SP	Description	
C530	1-163-038-91	s	CERAMIC, CHIP 0.1uF 25V	
C531	1-163-038-91	s	CERAMIC, CHIP 0.1uF 25V	
C532	1-163-038-91	s	CERAMIC, CHIP 0.1uF 25V	
C533	1-163-038-91	s	CERAMIC, CHIP 0.1uF 25V	
C534	1-126-391-11	s	ELECT, CHIP 47uF 20% 6.3V	
C535	1-163-038-91	s	CERAMIC, CHIP 0.1uF 25V	
C536	1-163-038-91	s	CERAMIC, CHIP 0.1uF 25V	
C537	1-163-989-11	s	CERAMIC, CHIP 0.033uF 10% 25V	
C538	1-163-121-00	s	CERAMIC, CHIP 150pF 5% 50V	
C539	1-163-038-91	s	CERAMIC, CHIP 0.1uF 25V	
C540	1-163-038-91	s	CERAMIC, CHIP 0.1uF 25V	
C541	1-163-038-91	s	CERAMIC, CHIP 0.1uF 25V	
C543	1-126-391-11	s	ELECT, CHIP 47uF 20% 6.3V	
C544	1-126-391-11	s	ELECT, CHIP 47uF 20% 6.3V	
C545	1-163-038-91	s	CERAMIC, CHIP 0.1uF 25V	
C546	1-163-239-11	s	CERAMIC, CHIP 33pF 5% 50V	
C547	1-163-037-11	s	CERAMIC, CHIP 0.022uF 10% 25V	
C548	1-163-038-91	s	CERAMIC, CHIP 0.1uF 25V	
C549	1-126-391-11	s	ELECT, CHIP 47uF 20% 6.3V	
C550	1-163-251-11	s	CERAMIC, CHIP 100pF 5% 50V	
C551	1-163-037-11	s	CERAMIC, CHIP 0.022uF 10% 25V	
C552	1-163-038-91	s	CERAMIC, CHIP 0.1uF 25V	
C553	1-163-038-91	s	CERAMIC, CHIP 0.1uF 25V	
C554	1-163-133-00	s	CERAMIC, CHIP 470pF 5% 50V	*2)
C601	1-163-037-11	s	CERAMIC, CHIP 0.022uF 10% 25V	
C602	1-163-037-11	s	CERAMIC, CHIP 0.022uF 10% 25V	
C603	1-163-037-11	s	CERAMIC, CHIP 0.022uF 10% 25V	
C604	1-163-275-11	s	CERAMIC, CHIP 0.001uF 5% 50V	
C605	1-126-401-11	s	ELECT, CHIP 1uF 20% 50V	
C606	1-126-404-11	s	ELECT, CHIP 4.7uF 20% 50V	
C607	1-164-232-11	s	CERAMIC, CHIP 0.01uF 10% 100V	
C608	1-163-037-11	s	CERAMIC, CHIP 0.022uF 10% 25V	
C609	1-163-037-11	s	CERAMIC, CHIP 0.022uF 10% 25V	
C610	1-163-259-91	s	CERAMIC, CHIP 220pF 5% 50V	
C611	1-163-037-11	s	CERAMIC, CHIP 0.022uF 10% 25V	
C612	1-163-227-11	s	CERAMIC, CHIP 10pF 5% 50V	
C613	1-163-239-11	s	CERAMIC, CHIP 33pF 5% 50V	
C614	1-163-243-11	s	CERAMIC, CHIP 47pF 5% 50V	
C615	1-163-113-00	s	CERAMIC, CHIP 68pF 5% 50V	
C616	1-164-232-11	s	CERAMIC, CHIP 0.01uF 10% 100V	
C617	1-163-121-00	s	CERAMIC, CHIP 150pF 5% 50V	
C618	1-164-232-11	s	CERAMIC, CHIP 0.01uF 10% 100V	
C619	1-163-263-11	s	CERAMIC, CHIP 330pF 5% 50V	
C620	1-163-809-11	s	CERAMIC, CHIP 0.047uF 10% 25V	
C621	1-163-809-11	s	CERAMIC, CHIP 0.047uF 10% 25V	
C622	1-163-038-91	s	CERAMIC, CHIP 0.1uF 25V	
C623	1-163-038-91	s	CERAMIC, CHIP 0.1uF 25V	
C624	1-163-038-91	s	CERAMIC, CHIP 0.1uF 25V	
C625	1-163-037-11	s	CERAMIC, CHIP 0.022uF 10% 25V	
C626	1-163-227-11	s	CERAMIC, CHIP 10pF 5% 50V	
C627	1-126-391-11	s	ELECT, CHIP 47uF 20% 6.3V	
C628	1-163-037-11	s	CERAMIC, CHIP 0.022uF 10% 25V	
C629	1-126-391-11	s	ELECT, CHIP 47uF 20% 6.3V	
C631	1-163-227-11	s	CERAMIC, CHIP 10pF 5% 50V	
C632	1-126-401-11	s	ELECT, CHIP 1uF 20% 50V	
C633	1-163-037-11	s	CERAMIC, CHIP 0.022uF 10% 25V	
C634	1-163-243-11	s	CERAMIC, CHIP 47pF 5% 50V	
C635	1-163-037-11	s	CERAMIC, CHIP 0.022uF 10% 25V	
C636	1-163-037-11	s	CERAMIC, CHIP 0.022uF 10% 25V	

(IO-149 BOARD(For NTSC); Suffix -13)

Ref. No. or Q'ty	Part No.	SP	Description
C637	1-163-037-11	s	CERAMIC, CHIP 0.022uF 10% 25V
C638	1-163-038-91	s	CERAMIC, CHIP 0.1uF 25V
C639	1-163-235-11	s	CERAMIC, CHIP 22pF 5% 50V
C640	1-163-037-11	s	CERAMIC, CHIP 0.022uF 10% 25V
C641	1-163-038-91	s	CERAMIC, CHIP 0.1uF 25V
C642	1-163-037-11	s	CERAMIC, CHIP 0.022uF 10% 25V
C643	1-163-243-11	s	CERAMIC, CHIP 47pF 5% 50V
C644	1-163-037-11	s	CERAMIC, CHIP 0.022uF 10% 25V
C645	1-126-393-11	s	ELECT, CHIP 33uF 20% 10V
C646	1-163-037-11	s	CERAMIC, CHIP 0.022uF 10% 25V
C647	1-163-037-11	s	CERAMIC, CHIP 0.022uF 10% 25V
C648	1-163-037-11	s	CERAMIC, CHIP 0.022uF 10% 25V
C649	1-163-037-11	s	CERAMIC, CHIP 0.022uF 10% 25V
C650	1-126-393-11	s	ELECT, CHIP 33uF 20% 10V
C651	1-163-037-11	s	CERAMIC, CHIP 0.022uF 10% 25V
C652	1-163-237-11	s	CERAMIC, CHIP 27pF 5% 50V
C653	1-163-237-11	s	CERAMIC, CHIP 27pF 5% 50V
C654	1-163-245-11	s	CERAMIC, CHIP 56pF 5% 50V
C655	1-163-245-11	s	CERAMIC, CHIP 56pF 5% 50V
C656	1-163-237-11	s	CERAMIC, CHIP 27pF 5% 50V
C657	1-163-237-11	s	CERAMIC, CHIP 27pF 5% 50V
C658	1-163-037-11	s	CERAMIC, CHIP 0.022uF 10% 25V
C659	1-163-037-11	s	CERAMIC, CHIP 0.022uF 10% 25V
C660	1-163-037-11	s	CERAMIC, CHIP 0.022uF 10% 25V
C661	1-163-037-11	s	CERAMIC, CHIP 0.022uF 10% 25V
C663	1-163-133-00	s	CERAMIC, CHIP 470pF 5% 50V
CT601	1-141-345-11	s	CAP, TRIMMER, CHIP 40pF
CT602	1-141-345-11	s	CAP, TRIMMER, CHIP 40pF
D1	8-719-941-04	s	DIODE SB007-03CP
D2	8-719-941-04	s	DIODE SB007-03CP
D3	8-719-053-18	s	DIODE 1SR154-400TE-25
D4	8-719-053-18	s	DIODE 1SR154-400TE-25
D5	8-719-053-18	s	DIODE 1SR154-400TE-25
D101	8-719-041-39	s	DIODE KV1470
D102	8-719-041-39	s	DIODE KV1470
D103	8-719-041-39	s	DIODE KV1470
D104	8-719-941-23	s	DIODE DA204U
D105	8-719-941-23	s	DIODE DA204U
D106	8-719-989-08	s	DIODE RB717F
D301	8-719-976-99	s	DIODE DTZ5.1B
D302	8-719-941-23	s	DIODE DA204U
D501	8-719-941-23	s	DIODE DA204U
D601	8-719-002-81	s	DIODE 1T363A-M20-T8A
D602	8-719-002-81	s	DIODE 1T363A-M20-T8A
E101	1-535-877-22	o	CHECKER, CHIP
E102	1-535-877-22	o	CHECKER, CHIP
E103	1-535-877-22	o	CHECKER, CHIP
E301	1-535-877-22	o	CHECKER, CHIP
E501	1-535-877-22	o	CHECKER, CHIP
E601	1-535-877-22	o	CHECKER, CHIP
F1	⚠ 1-576-124-11	s	LINK, IC, CHIP 1A
F2	⚠ 1-533-282-21	s	LINK, IC, CHIP 2A
F3	⚠ 1-576-124-11	s	LINK, IC, CHIP 1A
F4	⚠ 1-533-282-21	s	LINK, IC, CHIP 2A
F5	⚠ 1-576-124-11	s	LINK, IC, CHIP 1A
F6	⚠ 1-533-282-21	s	LINK, IC, CHIP 2A

(IO-149 BOARD(For NTSC); Suffix -13)

Ref. No. or Q'ty	Part No.	SP	Description
FL101	1-233-598-11	s	FILTER, LOW-PASS
FL102	1-233-598-11	s	FILTER, LOW-PASS
FL103	1-233-614-11	s	FILTER, LOW-PASS
FL104	1-239-771-11	s	FILTER, LOW-PASS
FL1001	1-239-719-11	s	FILTER, NOISE, CHIP
FL1002	1-239-719-11	s	FILTER, NOISE, CHIP
FL1003	1-239-719-11	s	FILTER, NOISE, CHIP
IC1	8-759-157-17	s	IC PQ05SZ1U
IC2	8-759-157-17	s	IC PQ05SZ1U
IC3	8-759-172-41	s	IC L78M09T-TL
IC4	8-759-172-41	s	IC L78M09T-TL
IC5	8-759-822-95	s	IC L79M05T-FA
IC6	8-759-822-95	s	IC L79M05T-FA
IC7	8-759-822-95	s	IC L79M05T-FA
IC8	8-759-157-17	s	IC PQ05SZ1U
IC101	8-759-198-63	s	IC S-81230SG-QB-T1
IC102	8-759-278-58	s	IC NJM4558V-TE2
IC103	8-759-278-58	s	IC NJM4558V-TE2
IC105	8-759-278-58	s	IC NJM4558V-TE2
IC106	8-759-082-61	s	IC TC4W53FU
IC107	8-759-076-06	s	IC TL064CPW
IC108	8-759-076-06	s	IC TL064CPW
IC109	8-752-052-77	s	IC CXA1450M
IC110	8-752-363-60	s	IC CXD2307R-T6
IC111	8-759-287-54	s	IC TL084CPW-E20
IC112	8-759-287-54	s	IC TL084CPW-E20
IC113	8-759-287-54	s	IC TL084CPW-E20
IC114	8-759-066-59	s	IC TC74HC4053AFS
IC115	8-752-054-80	s	IC CXA1521M
IC116	8-752-054-80	s	IC CXA1521M
IC117	8-759-906-59	s	IC CX22017
IC118	8-759-907-81	s	IC SN74LS221NS
IC301	8-759-082-59	s	IC TC7W32FU
IC302	8-759-082-61	s	IC TC4W53FU
IC304	8-759-287-54	s	IC TL084CPW-E20
IC305	8-759-082-61	s	IC TC4W53FU
IC306	8-752-052-73	s	IC CXA1451M
IC307	8-752-052-73	s	IC CXA1451M
IC308	8-759-262-00	s	IC MC14576CF
IC309	8-752-052-73	s	IC CXA1451M
IC310	8-752-052-73	s	IC CXA1451M
IC311	8-752-052-73	s	IC CXA1451M
IC312	8-759-082-61	s	IC TC4W53FU
IC501	8-759-082-57	s	IC TC7W04FU
IC502	8-752-052-77	s	IC CXA1450M
IC503	8-752-052-77	s	IC CXA1450M
IC504	8-759-173-16	s	IC TL062CPW
IC505	8-759-076-06	s	IC TL064CPW
IC506	8-759-430-88	s	IC TC74HC4051AFS(EL)
IC507	8-759-324-03	s	IC HA17431UA-TL
IC508	8-759-076-06	s	IC TL064CPW
IC509	8-752-052-77	s	IC CXA1450M
IC510	8-759-262-03	s	IC MC14577CF
IC512	8-759-987-27	s	IC LM1881MX
IC513	8-759-079-66	s	IC TC74VHC123AFS(EL)
IC514	8-759-980-04	s	IC LM311PS
IC515	8-759-702-08	s	IC NJM360M
IC516	8-752-052-77	s	IC CXA1450M

(IO-149 BOARD(For NTSC); Suffix -13)

Ref. No. or Q'ty	Part No.	SP	Description
IC601	8-759-082-57	s	IC TC7W04FU
IC602	8-759-250-81	s	IC TC5081AP
IC603	8-759-079-67	s	IC TC74VHC125FS(EL)
IC604	8-759-058-57	s	IC TC7S04FU-TE85L
IC605	8-759-357-24	s	IC MC68HC705C8AFU
IC606	8-752-335-47	s	IC CXD1216M
IC607	8-759-066-59	s	IC TC74HC4053AFS
IC608	8-759-241-03	s	IC TC74HC191AF
IC609	8-759-082-57	s	IC TC7W04FU
IC610	8-759-271-86	s	IC TC7SH04FU
IC611	8-759-271-86	s	IC TC7SH04FU
IC612	8-759-079-66	s	IC TC74VHC123AFS(EL)
IC613	8-759-079-80	s	IC TC74VHC175FS(EL)
IC614	8-759-519-49	s	IC CXD8165Q
IC615	8-752-339-46	s	IC CXD1177Q
IC616	8-759-082-57	s	IC TC7W04FU
IC617	8-759-066-59	s	IC TC74HC4053AFS
IC618	8-759-271-86	s	IC TC7SH04FU
IC619	8-759-271-86	s	IC TC7SH04FU
L101	1-414-402-11	s	INDUCTOR, CHIP 47uH
L102	1-414-400-11	s	INDUCTOR, CHIP 22uH
L103	1-414-400-11	s	INDUCTOR, CHIP 22uH
L104	1-414-402-11	s	INDUCTOR, CHIP 47uH
L105	1-414-402-11	s	INDUCTOR, CHIP 47uH
L106	1-414-400-11	s	INDUCTOR, CHIP 22uH
L107	1-414-400-11	s	INDUCTOR, CHIP 22uH
L108	1-414-402-11	s	INDUCTOR, CHIP 47uH
L109	1-414-402-11	s	INDUCTOR, CHIP 47uH
L110	1-414-402-11	s	INDUCTOR, CHIP 47uH
L111	1-414-402-11	s	INDUCTOR, CHIP 47uH
L112	1-414-404-11	s	INDUCTOR, CHIP 100uH
L113	1-414-402-11	s	INDUCTOR, CHIP 47uH
L114	1-414-404-11	s	INDUCTOR, CHIP 100uH
L115	1-410-385-11	s	INDUCTOR, CHIP 22uH
L117	1-410-393-11	s	INDUCTOR, CHIP 100uH
L301	1-414-402-11	s	INDUCTOR, CHIP 47uH
L302	1-414-402-11	s	INDUCTOR, CHIP 47uH
L303	1-414-402-11	s	INDUCTOR, CHIP 47uH
L304	1-414-402-11	s	INDUCTOR, CHIP 47uH
L305	1-410-391-11	s	INDUCTOR, CHIP 68uH
L306	1-410-391-11	s	INDUCTOR, CHIP 68uH
L307	1-414-402-11	s	INDUCTOR, CHIP 47uH
L308	1-414-402-11	s	INDUCTOR, CHIP 47uH
L309	1-414-402-11	s	INDUCTOR, CHIP 47uH
L310	1-410-387-11	s	INDUCTOR, CHIP 33uH
L311	1-410-387-11	s	INDUCTOR, CHIP 33uH
L312	1-414-402-11	s	INDUCTOR, CHIP 47uH
L313	1-414-402-11	s	INDUCTOR, CHIP 47uH
L314	1-410-389-31	s	INDUCTOR, CHIP 47uH
L315	1-410-387-11	s	INDUCTOR, CHIP 33uH
L501	1-410-390-11	s	INDUCTOR, CHIP 56uH
L502	1-410-393-11	s	INDUCTOR, CHIP 100uH
L503	1-414-402-11	s	INDUCTOR, CHIP 47uH
L504	1-414-402-11	s	INDUCTOR, CHIP 47uH
L505	1-410-391-11	s	INDUCTOR, CHIP 68uH
L506	1-414-402-11	s	INDUCTOR, CHIP 47uH
L507	1-414-402-11	s	INDUCTOR, CHIP 47uH
L601	1-414-402-11	s	INDUCTOR, CHIP 47uH
L602	1-414-402-11	s	INDUCTOR, CHIP 47uH

(IO-149 BOARD(For NTSC); Suffix -13)

Ref. No. or Q'ty	Part No.	SP	Description
L603	1-414-400-11	s	INDUCTOR, CHIP 22uH
L604	1-414-400-11	s	INDUCTOR, CHIP 22uH
L605	1-410-389-31	s	INDUCTOR, CHIP 47uH
L606	1-410-389-31	s	INDUCTOR, CHIP 47uH
L607	1-410-389-31	s	INDUCTOR, CHIP 47uH
L608	1-410-389-31	s	INDUCTOR, CHIP 47uH
Q101	8-729-117-32	s	TRANSISTOR 2SC4177
Q102	8-729-117-32	s	TRANSISTOR 2SC4177
Q103	8-729-117-32	s	TRANSISTOR 2SC4177
Q104	8-729-140-63	s	TRANSISTOR 2SA1611-M5M6
Q105	8-729-117-32	s	TRANSISTOR 2SC4177
Q106	8-729-117-32	s	TRANSISTOR 2SC4177
Q107	8-729-117-32	s	TRANSISTOR 2SC4177
Q108	8-729-923-06	s	TRANSISTOR FMW-8
Q109	8-729-923-06	s	TRANSISTOR FMW-8
Q110	8-729-923-06	s	TRANSISTOR FMW-8
Q111	8-729-904-04	s	TRANSISTOR FMS2
Q112	8-729-904-04	s	TRANSISTOR FMS2
Q113	8-729-904-04	s	TRANSISTOR FMS2
Q114	8-729-903-82	s	TRANSISTOR FMW2
Q115	8-729-903-82	s	TRANSISTOR FMW2
Q116	8-729-903-82	s	TRANSISTOR FMW2
Q117	8-729-931-46	s	TRANSISTOR FMW7
Q118	8-729-931-46	s	TRANSISTOR FMW7
Q119	8-729-931-46	s	TRANSISTOR FMW7
Q120	8-729-907-26	s	TRANSISTOR IMX1
Q121	8-729-907-26	s	TRANSISTOR IMX1
Q122	8-729-907-26	s	TRANSISTOR IMX1
Q123	8-729-143-14	s	TRANSISTOR 2SC4176-B35
Q124	8-729-117-32	s	TRANSISTOR 2SC4177
Q125	8-729-140-63	s	TRANSISTOR 2SA1611-M5M6
Q126	8-729-117-32	s	TRANSISTOR 2SC4177
Q127	8-729-143-14	s	TRANSISTOR 2SC4176-B35
Q128	8-729-140-63	s	TRANSISTOR 2SA1611-M5M6
Q129	8-729-903-82	s	TRANSISTOR FMW2
Q130	8-729-117-32	s	TRANSISTOR 2SC4177
Q131	8-729-903-82	s	TRANSISTOR FMW2
Q301	8-729-143-14	s	TRANSISTOR 2SC4176-B35
Q302	8-729-904-41	s	TRANSISTOR FMY3
Q303	8-729-140-63	s	TRANSISTOR 2SA1611-M5M6
Q304	8-729-140-63	s	TRANSISTOR 2SA1611-M5M6
Q305	8-729-117-32	s	TRANSISTOR 2SC4177
Q306	8-729-117-32	s	TRANSISTOR 2SC4177
Q307	8-729-907-26	s	TRANSISTOR IMX1
Q308	8-729-117-32	s	TRANSISTOR 2SC4177
Q309	8-729-117-32	s	TRANSISTOR 2SC4177
Q310	8-729-143-14	s	TRANSISTOR 2SC4176-B35
Q311	8-729-117-32	s	TRANSISTOR 2SC4177
Q312	8-729-907-26	s	TRANSISTOR IMX1
Q313	8-729-140-63	s	TRANSISTOR 2SA1611-M5M6
Q314	8-729-140-63	s	TRANSISTOR 2SA1611-M5M6
Q315	8-729-117-32	s	TRANSISTOR 2SC4177
Q316	8-729-140-63	s	TRANSISTOR 2SA1611-M5M6
Q317	8-729-117-32	s	TRANSISTOR 2SC4177
Q318	8-729-904-41	s	TRANSISTOR FMY3
Q319	8-729-904-41	s	TRANSISTOR FMY3
Q320	8-729-117-32	s	TRANSISTOR 2SC4177
Q321	8-729-117-32	s	TRANSISTOR 2SC4177

(IO-149 BOARD(For NTSC); Suffix -13)

Ref. No. or Q'ty	Part No.	SP	Description
Q322	8-729-117-32	s	TRANSISTOR 2SC4177
Q323	8-729-143-14	s	TRANSISTOR 2SC4176-B35
Q324	8-729-140-63	s	TRANSISTOR 2SA1611-M5M6
Q325	8-729-140-63	s	TRANSISTOR 2SA1611-M5M6
Q326	8-729-117-32	s	TRANSISTOR 2SC4177
Q327	8-729-117-32	s	TRANSISTOR 2SC4177
Q328	8-729-117-32	s	TRANSISTOR 2SC4177
Q329	8-729-117-32	s	TRANSISTOR 2SC4177
Q330	8-729-117-32	s	TRANSISTOR 2SC4177
Q331	8-729-904-41	s	TRANSISTOR FMY3
Q332	8-729-422-44	s	TRANSISTOR 2SK663
Q333	8-729-422-44	s	TRANSISTOR 2SK663
Q334	8-729-422-44	s	TRANSISTOR 2SK663
Q335	8-729-422-44	s	TRANSISTOR 2SK663
Q336	8-729-140-63	s	TRANSISTOR 2SA1611-M5M6
Q337	8-729-140-63	s	TRANSISTOR 2SA1611-M5M6
Q338	8-729-140-63	s	TRANSISTOR 2SA1611-M5M6
Q339	8-729-140-63	s	TRANSISTOR 2SA1611-M5M6
Q340	8-729-117-32	s	TRANSISTOR 2SC4177
Q341	8-729-907-26	s	TRANSISTOR IMX1
Q342	8-729-907-26	s	TRANSISTOR IMX1
Q343	8-729-117-32	s	TRANSISTOR 2SC4177
Q344	8-729-117-32	s	TRANSISTOR 2SC4177
Q345	8-729-907-26	s	TRANSISTOR IMX1
Q346	8-729-117-32	s	TRANSISTOR 2SC4177
Q347	8-729-907-26	s	TRANSISTOR IMX1
Q348	8-729-117-32	s	TRANSISTOR 2SC4177
Q349	8-729-140-63	s	TRANSISTOR 2SA1611-M5M6
Q350	8-729-140-63	s	TRANSISTOR 2SA1611-M5M6
Q501	8-729-117-32	s	TRANSISTOR 2SC4177
Q502	8-729-117-32	s	TRANSISTOR 2SC4177
Q503	8-729-117-32	s	TRANSISTOR 2SC4177
Q504	8-729-117-32	s	TRANSISTOR 2SC4177
Q505	8-729-117-32	s	TRANSISTOR 2SC4177
Q506	8-729-904-41	s	TRANSISTOR FMY3
Q507	8-729-117-32	s	TRANSISTOR 2SC4177
Q508	8-729-117-32	s	TRANSISTOR 2SC4177
Q509	8-729-117-32	s	TRANSISTOR 2SC4177
Q601	8-729-140-47	s	TRANSISTOR 2SC3735-B34
Q602	8-729-140-47	s	TRANSISTOR 2SC3735-B34
Q603	8-729-140-47	s	TRANSISTOR 2SC3735-B34
Q604	8-729-140-47	s	TRANSISTOR 2SC3735-B34
Q605	8-729-117-32	s	TRANSISTOR 2SC4177
Q606	8-729-117-32	s	TRANSISTOR 2SC4177
Q607	8-729-117-32	s	TRANSISTOR 2SC4177
Q608	8-729-117-32	s	TRANSISTOR 2SC4177
R101	1-216-672-11	s	METAL, CHIP 7.5k 0.5% 1/10W
R102	1-216-665-11	s	METAL, CHIP 3.9k 0.5% 1/10W
R103	1-216-667-11	s	METAL, CHIP 4.7k 0.5% 1/10W
R104	1-216-675-11	s	METAL, CHIP 10k 0.5% 1/10W
R105	1-216-041-00	s	METAL, CHIP 470 5% 1/10W
R106	1-216-295-91	s	RES, CHIP 0
R107	1-216-652-11	s	METAL, CHIP 1.1k 0.5% 1/10W
R108	1-216-668-11	s	METAL, CHIP 5.1k 0.5% 1/10W
R110	1-216-295-91	s	RES, CHIP 0
R112	1-216-295-91	s	RES, CHIP 0
R113	1-216-668-11	s	METAL, CHIP 5.1k 0.5% 1/10W
R114	1-216-665-11	s	METAL, CHIP 3.9k 0.5% 1/10W

(IO-149 BOARD(For NTSC); Suffix -13)

Ref. No. or Q'ty	Part No.	SP	Description
R115	1-216-663-11	s	METAL, CHIP 3.3k 0.5% 1/10W
R116	1-216-073-00	s	METAL, CHIP 10k 5% 1/10W
R117	1-216-655-11	s	METAL, CHIP 1.5k 0.5% 1/10W
R118	1-216-657-11	s	METAL, CHIP 1.8k 0.5% 1/10W
R119	1-216-675-11	s	METAL, CHIP 10k 0.5% 1/10W
R120	1-216-675-11	s	METAL, CHIP 10k 0.5% 1/10W
R121	1-216-073-00	s	METAL, CHIP 10k 5% 1/10W
R122	1-216-073-00	s	METAL, CHIP 10k 5% 1/10W
R123	1-216-085-00	s	METAL, CHIP 33k 5% 1/10W
R124	1-216-085-00	s	METAL, CHIP 33k 5% 1/10W
R125	1-216-121-91	s	METAL, CHIP 1M 5% 1/10W
R126	1-216-121-91	s	METAL, CHIP 1M 5% 1/10W
R127	1-216-085-00	s	METAL, CHIP 33k 5% 1/10W
R128	1-216-085-00	s	METAL, CHIP 33k 5% 1/10W
R129	1-216-121-91	s	METAL, CHIP 1M 5% 1/10W
R130	1-216-121-91	s	METAL, CHIP 1M 5% 1/10W
R131	1-216-033-00	s	METAL, CHIP 220 5% 1/10W
R132	1-216-033-00	s	METAL, CHIP 220 5% 1/10W
R133	1-216-053-00	s	METAL, CHIP 1.5k 5% 1/10W
R134	1-216-053-00	s	METAL, CHIP 1.5k 5% 1/10W
R135	1-216-675-11	s	METAL, CHIP 10k 0.5% 1/10W
R136	1-216-073-00	s	METAL, CHIP 10k 5% 1/10W
R137	1-216-081-00	s	METAL, CHIP 22k 5% 1/10W
R138	1-216-121-91	s	METAL, CHIP 1M 5% 1/10W
R139	1-216-085-00	s	METAL, CHIP 33k 5% 1/10W
R140	1-216-121-91	s	METAL, CHIP 1M 5% 1/10W
R141	1-216-033-00	s	METAL, CHIP 220 5% 1/10W
R142	1-216-065-00	s	METAL, CHIP 4.7k 5% 1/10W
R143	1-216-065-00	s	METAL, CHIP 4.7k 5% 1/10W
R144	1-216-677-11	s	METAL, CHIP 12k 0.5% 1/10W
R145	1-216-678-11	s	METAL, CHIP 13k 0.5% 1/10W
R146	1-216-678-11	s	METAL, CHIP 13k 0.5% 1/10W
R147	1-216-667-11	s	METAL, CHIP 4.7k 0.5% 1/10W
R148	1-216-678-11	s	METAL, CHIP 13k 0.5% 1/10W
R149	1-216-659-11	s	METAL, CHIP 2.2k 0.5% 1/10W
R150	1-216-673-11	s	METAL, CHIP 8.2k 0.5% 1/10W
R151	1-216-659-11	s	METAL, CHIP 2.2k 0.5% 1/10W
R152	1-216-661-11	s	METAL, CHIP 2.7k 0.5% 1/10W
R153	1-216-661-11	s	METAL, CHIP 2.7k 0.5% 1/10W
R154	1-216-085-00	s	METAL, CHIP 33k 5% 1/10W
R155	1-216-675-11	s	METAL, CHIP 10k 0.5% 1/10W
R156	1-216-675-11	s	METAL, CHIP 10k 0.5% 1/10W
R157	1-216-679-11	s	METAL, CHIP 15k 0.5% 1/10W
R158	1-216-679-11	s	METAL, CHIP 15k 0.5% 1/10W
R159	1-216-659-11	s	METAL, CHIP 2.2k 0.5% 1/10W
R160	1-216-679-11	s	METAL, CHIP 15k 0.5% 1/10W
R161	1-216-679-11	s	METAL, CHIP 15k 0.5% 1/10W
R162	1-216-661-11	s	METAL, CHIP 2.7k 0.5% 1/10W
R163	1-216-679-11	s	METAL, CHIP 15k 0.5% 1/10W
R164	1-216-671-11	s	METAL, CHIP 6.8k 0.5% 1/10W
R165	1-216-671-11	s	METAL, CHIP 6.8k 0.5% 1/10W
R166	1-216-679-11	s	METAL, CHIP 15k 0.5% 1/10W
R167	1-216-663-11	s	METAL, CHIP 3.3k 0.5% 1/10W
R168	1-216-659-11	s	METAL, CHIP 2.2k 0.5% 1/10W
R169	1-216-081-00	s	METAL, CHIP 22k 5% 1/10W
R170	1-216-081-00	s	METAL, CHIP 22k 5% 1/10W
R171	1-216-081-00	s	METAL, CHIP 22k 5% 1/10W
R172	1-216-645-11	s	METAL, CHIP 560 0.5% 1/10W
R173	1-216-665-11	s	METAL, CHIP 3.9k 0.5% 1/10W

(IO-149 BOARD(For NTSC); Suffix -13)

Ref. No. or Q'ty	Part No.	SP	Description
R174	1-216-665-11	s	METAL, CHIP 3.9k 0.5% 1/10W
R175	1-216-089-91	s	METAL, CHIP 47k 5% 1/10W
R176	1-216-667-11	s	METAL, CHIP 4.7k 0.5% 1/10W
R177	1-216-089-91	s	METAL, CHIP 47k 5% 1/10W
R178	1-216-089-91	s	METAL, CHIP 47k 5% 1/10W
R179	1-216-639-11	s	METAL, CHIP 330 0.5% 1/10W
R180	1-216-639-11	s	METAL, CHIP 330 0.5% 1/10W
R181	1-216-639-11	s	METAL, CHIP 330 0.5% 1/10W
R182	1-216-639-11	s	METAL, CHIP 330 0.5% 1/10W
R183	1-216-639-11	s	METAL, CHIP 330 0.5% 1/10W
R184	1-216-639-11	s	METAL, CHIP 330 0.5% 1/10W
R185	1-216-045-00	s	METAL, CHIP 680 5% 1/10W
R186	1-216-045-00	s	METAL, CHIP 680 5% 1/10W
R187	1-216-017-91	s	METAL, CHIP 47 5% 1/10W
R188	1-216-017-91	s	METAL, CHIP 47 5% 1/10W
R189	1-216-045-00	s	METAL, CHIP 680 5% 1/10W
R190	1-216-017-91	s	METAL, CHIP 47 5% 1/10W
R191	1-216-017-91	s	METAL, CHIP 47 5% 1/10W
R192	1-216-017-91	s	METAL, CHIP 47 5% 1/10W
R193	1-216-017-91	s	METAL, CHIP 47 5% 1/10W
R194	1-216-057-00	s	METAL, CHIP 2.2k 5% 1/10W
R195	1-216-057-00	s	METAL, CHIP 2.2k 5% 1/10W
R196	1-216-057-00	s	METAL, CHIP 2.2k 5% 1/10W
R197	1-216-049-91	s	METAL, CHIP 1k 5% 1/10W
R198	1-216-049-91	s	METAL, CHIP 1k 5% 1/10W
R199	1-216-049-91	s	METAL, CHIP 1k 5% 1/10W
R200	1-216-049-91	s	METAL, CHIP 1k 5% 1/10W
R201	1-216-049-91	s	METAL, CHIP 1k 5% 1/10W
R202	1-216-049-91	s	METAL, CHIP 1k 5% 1/10W
R203	1-216-057-00	s	METAL, CHIP 2.2k 5% 1/10W
R204	1-216-057-00	s	METAL, CHIP 2.2k 5% 1/10W
R205	1-216-057-00	s	METAL, CHIP 2.2k 5% 1/10W
R206	1-216-033-00	s	METAL, CHIP 220 5% 1/10W
R207	1-216-033-00	s	METAL, CHIP 220 5% 1/10W
R208	1-216-033-00	s	METAL, CHIP 220 5% 1/10W
R209	1-216-045-00	s	METAL, CHIP 680 5% 1/10W
R210	1-216-045-00	s	METAL, CHIP 680 5% 1/10W
R211	1-216-045-00	s	METAL, CHIP 680 5% 1/10W
R212	1-216-077-00	s	METAL, CHIP 15k 5% 1/10W
R213	1-216-077-00	s	METAL, CHIP 15k 5% 1/10W
R214	1-216-077-00	s	METAL, CHIP 15k 5% 1/10W
R215	1-216-027-00	s	METAL, CHIP 120 5% 1/10W
R216	1-216-027-00	s	METAL, CHIP 120 5% 1/10W
R217	1-216-027-00	s	METAL, CHIP 120 5% 1/10W
R218	1-216-045-00	s	METAL, CHIP 680 5% 1/10W
R219	1-216-045-00	s	METAL, CHIP 680 5% 1/10W
R220	1-216-295-91	s	RES, CHIP 0
R221	1-216-017-91	s	METAL, CHIP 47 5% 1/10W
R222	1-216-017-91	s	METAL, CHIP 47 5% 1/10W
R223	1-216-017-91	s	METAL, CHIP 47 5% 1/10W
R224	1-216-651-11	s	METAL, CHIP 1k 0.5% 1/10W
R225	1-216-659-11	s	METAL, CHIP 2.2k 0.5% 1/10W
R226	1-216-651-11	s	METAL, CHIP 1k 0.5% 1/10W
R227	1-216-659-11	s	METAL, CHIP 2.2k 0.5% 1/10W
R228	1-216-049-91	s	METAL, CHIP 1k 5% 1/10W
R229	1-216-659-11	s	METAL, CHIP 2.2k 0.5% 1/10W
R230	1-216-651-11	s	METAL, CHIP 1k 0.5% 1/10W
R231	1-216-121-91	s	METAL, CHIP 1M 5% 1/10W
R232	1-216-049-91	s	METAL, CHIP 1k 5% 1/10W

(IO-149 BOARD(For NTSC); Suffix -13)

Ref. No. or Q'ty	Part No.	SP	Description
R233	1-216-049-91	s	METAL, CHIP 1k 5% 1/10W
R234	1-216-121-91	s	METAL, CHIP 1M 5% 1/10W
R235	1-216-121-91	s	METAL, CHIP 1M 5% 1/10W
R236	1-216-049-91	s	METAL, CHIP 1k 5% 1/10W
R237	1-216-049-91	s	METAL, CHIP 1k 5% 1/10W
R238	1-216-049-91	s	METAL, CHIP 1k 5% 1/10W
R239	1-216-049-91	s	METAL, CHIP 1k 5% 1/10W
R240	1-216-049-91	s	METAL, CHIP 1k 5% 1/10W
R241	1-216-089-91	s	METAL, CHIP 47k 5% 1/10W
R242	1-216-049-91	s	METAL, CHIP 1k 5% 1/10W
R243	1-216-089-91	s	METAL, CHIP 47k 5% 1/10W
R244	1-216-073-00	s	METAL, CHIP 10k 5% 1/10W
R245	1-216-649-11	s	METAL, CHIP 820 0.5% 1/10W
R246	1-216-057-00	s	METAL, CHIP 2.2k 5% 1/10W
R247	1-216-651-11	s	METAL, CHIP 1k 0.5% 1/10W
R248	1-216-057-00	s	METAL, CHIP 2.2k 5% 1/10W
R249	1-216-643-11	s	METAL, CHIP 470 0.5% 1/10W
R250	1-216-639-11	s	METAL, CHIP 330 0.5% 1/10W
R251	1-216-643-11	s	METAL, CHIP 470 0.5% 1/10W
R252	1-216-677-11	s	METAL, CHIP 12k 0.5% 1/10W
R253	1-216-683-11	s	METAL, CHIP 22k 0.5% 1/10W
R254	1-216-681-11	s	METAL, CHIP 18k 0.5% 1/10W
R255	1-216-683-11	s	METAL, CHIP 22k 0.5% 1/10W
R256	1-216-097-91	s	METAL, CHIP 100k 5% 1/10W
R257	1-216-089-91	s	METAL, CHIP 47k 5% 1/10W
R258	1-216-295-91	s	RES, CHIP 0
R259	1-216-668-11	s	METAL, CHIP 5.1k 0.5% 1/10W
R260	1-216-073-00	s	METAL, CHIP 10k 5% 1/10W
R261	1-216-049-91	s	METAL, CHIP 1k 5% 1/10W
R262	1-216-687-11	s	METAL, CHIP 33k 0.5% 1/10W
R263	1-216-065-00	s	METAL, CHIP 4.7k 5% 1/10W
R264	1-216-065-00	s	METAL, CHIP 4.7k 5% 1/10W
R265	1-216-049-91	s	METAL, CHIP 1k 5% 1/10W
R266	1-216-049-91	s	METAL, CHIP 1k 5% 1/10W
R267	1-216-049-91	s	METAL, CHIP 1k 5% 1/10W
R268	1-216-049-91	s	METAL, CHIP 1k 5% 1/10W
R269	1-216-057-00	s	METAL, CHIP 2.2k 5% 1/10W
R270	1-216-647-11	s	METAL, CHIP 680 0.5% 1/10W
R271	1-216-081-00	s	METAL, CHIP 22k 5% 1/10W
R272	1-216-666-11	s	METAL, CHIP 4.3k 0.5% 1/10W
R274	1-216-661-11	s	METAL, CHIP 2.7k 0.5% 1/10W
R275	1-216-057-00	s	METAL, CHIP 2.2k 5% 1/10W
R276	1-216-049-91	s	METAL, CHIP 1k 5% 1/10W
R277	1-216-081-00	s	METAL, CHIP 22k 5% 1/10W
R278	1-216-025-91	s	METAL, CHIP 100 5% 1/10W
R279	1-216-017-91	s	METAL, CHIP 47 5% 1/10W
R280	1-216-657-11	s	METAL, CHIP 1.8k 0.5% 1/10W
R281	1-216-073-00	s	METAL, CHIP 10k 5% 1/10W
R282	1-216-097-91	s	METAL, CHIP 100k 5% 1/10W
R283	1-216-081-00	s	METAL, CHIP 22k 5% 1/10W
R284	1-216-081-00	s	METAL, CHIP 22k 5% 1/10W
R285	1-216-081-00	s	METAL, CHIP 22k 5% 1/10W
R286	1-216-081-00	s	METAL, CHIP 22k 5% 1/10W
R301	1-216-065-00	s	METAL, CHIP 4.7k 5% 1/10W
R302	1-216-025-91	s	METAL, CHIP 100 5% 1/10W
R303	1-216-065-00	s	METAL, CHIP 4.7k 5% 1/10W
R304	1-216-049-91	s	METAL, CHIP 1k 5% 1/10W
R305	1-216-049-91	s	METAL, CHIP 1k 5% 1/10W
R306	1-216-033-00	s	METAL, CHIP 220 5% 1/10W

(IO-149 BOARD(For NTSC); Suffix -13)

Ref. No. or Q'ty	Part No.	SP	Description
R307	1-216-057-00	s	METAL, CHIP 2.2k 5% 1/10W
R308	1-216-057-00	s	METAL, CHIP 2.2k 5% 1/10W
R309	1-216-049-91	s	METAL, CHIP 1k 5% 1/10W
R310	1-216-049-91	s	METAL, CHIP 1k 5% 1/10W
R311	1-216-659-11	s	METAL, CHIP 2.2k 0.5% 1/10W
R312	1-216-627-11	s	METAL, CHIP 100 0.5% 1/10W
R313	1-216-295-91	s	RES, CHIP 0
R314	1-216-661-11	s	METAL, CHIP 2.7k 0.5% 1/10W
R315	1-216-065-00	s	METAL, CHIP 4.7k 5% 1/10W
R316	1-216-025-91	s	METAL, CHIP 100 5% 1/10W
R317	1-216-647-11	s	METAL, CHIP 680 0.5% 1/10W
R318	1-216-017-91	s	METAL, CHIP 47 5% 1/10W
R319	1-216-657-11	s	METAL, CHIP 1.8k 0.5% 1/10W
R320	1-216-065-00	s	METAL, CHIP 4.7k 5% 1/10W
R321	1-216-025-91	s	METAL, CHIP 100 5% 1/10W
R322	1-216-643-11	s	METAL, CHIP 470 0.5% 1/10W
R323	1-216-653-11	s	METAL, CHIP 1.2k 0.5% 1/10W
R324	1-216-643-11	s	METAL, CHIP 470 0.5% 1/10W
R325	1-216-643-11	s	METAL, CHIP 470 0.5% 1/10W
R326	1-216-647-11	s	METAL, CHIP 680 0.5% 1/10W
R327	1-216-065-00	s	METAL, CHIP 4.7k 5% 1/10W
R328	1-216-639-11	s	METAL, CHIP 330 0.5% 1/10W
R329	1-216-049-91	s	METAL, CHIP 1k 5% 1/10W
R330	1-216-033-00	s	METAL, CHIP 220 5% 1/10W
R331	1-216-049-91	s	METAL, CHIP 1k 5% 1/10W
R332	1-216-049-91	s	METAL, CHIP 1k 5% 1/10W
R333	1-216-049-91	s	METAL, CHIP 1k 5% 1/10W
R336	1-216-061-00	s	METAL, CHIP 3.3k 5% 1/10W
R337	1-216-683-11	s	METAL, CHIP 22k 0.5% 1/10W
R338	1-216-667-11	s	METAL, CHIP 4.7k 0.5% 1/10W
R339	1-216-049-91	s	METAL, CHIP 1k 5% 1/10W
R340	1-216-643-11	s	METAL, CHIP 470 0.5% 1/10W
R341	1-216-643-11	s	METAL, CHIP 470 0.5% 1/10W
R342	1-216-651-11	s	METAL, CHIP 1k 0.5% 1/10W
R343	1-216-053-00	s	METAL, CHIP 1.5k 5% 1/10W
R344	1-216-025-91	s	METAL, CHIP 100 5% 1/10W
R345	1-216-643-11	s	METAL, CHIP 470 0.5% 1/10W
R346	1-216-077-00	s	METAL, CHIP 15k 5% 1/10W
R347	1-216-057-00	s	METAL, CHIP 2.2k 5% 1/10W
R348	1-216-655-11	s	METAL, CHIP 1.5k 0.5% 1/10W
R349	1-216-025-91	s	METAL, CHIP 100 5% 1/10W
R350	1-216-643-11	s	METAL, CHIP 470 0.5% 1/10W
R351	1-216-057-00	s	METAL, CHIP 2.2k 5% 1/10W
R352	1-216-634-11	s	METAL, CHIP 200 0.5% 1/10W
R354	1-216-057-00	s	METAL, CHIP 2.2k 5% 1/10W
R357	1-216-655-11	s	METAL, CHIP 1.5k 0.5% 1/10W
R359	1-216-057-00	s	METAL, CHIP 2.2k 5% 1/10W
R361	1-216-651-11	s	METAL, CHIP 1k 0.5% 1/10W
R362	1-216-025-91	s	METAL, CHIP 100 5% 1/10W
R363	1-216-025-91	s	METAL, CHIP 100 5% 1/10W
R364	1-216-049-91	s	METAL, CHIP 1k 5% 1/10W
R365	1-216-025-91	s	METAL, CHIP 100 5% 1/10W
R366	1-216-651-11	s	METAL, CHIP 1k 0.5% 1/10W
R367	1-216-653-11	s	METAL, CHIP 1.2k 0.5% 1/10W
R368	1-216-049-91	s	METAL, CHIP 1k 5% 1/10W
R369	1-216-049-91	s	METAL, CHIP 1k 5% 1/10W
R370	1-216-651-11	s	METAL, CHIP 1k 0.5% 1/10W
R371	1-216-057-00	s	METAL, CHIP 2.2k 5% 1/10W
R372	1-216-049-91	s	METAL, CHIP 1k 5% 1/10W

(IO-149 BOARD(For NTSC); Suffix -13)

Ref. No. or Q'ty	Part No.	SP	Description
R373	1-216-049-91	s	METAL, CHIP 1k 5% 1/10W
R374	1-216-653-11	s	METAL, CHIP 1.2k 0.5% 1/10W
R375	1-216-653-11	s	METAL, CHIP 1.2k 0.5% 1/10W
R376	1-216-049-91	s	METAL, CHIP 1k 5% 1/10W
R377	1-216-049-91	s	METAL, CHIP 1k 5% 1/10W
R378	1-216-065-00	s	METAL, CHIP 4.7k 5% 1/10W
R379	1-216-025-91	s	METAL, CHIP 100 5% 1/10W
R380	1-216-065-00	s	METAL, CHIP 4.7k 5% 1/10W
R381	1-216-025-91	s	METAL, CHIP 100 5% 1/10W
R382	1-216-053-00	s	METAL, CHIP 1.5k 5% 1/10W
R383	1-216-049-91	s	METAL, CHIP 1k 5% 1/10W
R384	1-216-049-91	s	METAL, CHIP 1k 5% 1/10W
R385	1-216-049-91	s	METAL, CHIP 1k 5% 1/10W
R386	1-216-049-91	s	METAL, CHIP 1k 5% 1/10W
R387	1-216-049-91	s	METAL, CHIP 1k 5% 1/10W
R388	1-216-049-91	s	METAL, CHIP 1k 5% 1/10W
R389	1-216-639-11	s	METAL, CHIP 330 0.5% 1/10W
R390	1-216-639-11	s	METAL, CHIP 330 0.5% 1/10W
R391	1-216-057-00	s	METAL, CHIP 2.2k 5% 1/10W
R392	1-216-041-00	s	METAL, CHIP 470 5% 1/10W
R393	1-216-057-00	s	METAL, CHIP 2.2k 5% 1/10W
R394	1-216-025-91	s	METAL, CHIP 100 5% 1/10W
R395	1-216-025-91	s	METAL, CHIP 100 5% 1/10W
R396	1-216-025-91	s	METAL, CHIP 100 5% 1/10W
R397	1-216-025-91	s	METAL, CHIP 100 5% 1/10W
R398	1-216-055-00	s	METAL, CHIP 1.8k 5% 1/10W
R399	1-216-065-00	s	METAL, CHIP 4.7k 5% 1/10W
R400	1-216-065-00	s	METAL, CHIP 4.7k 5% 1/10W
R401	1-216-065-00	s	METAL, CHIP 4.7k 5% 1/10W
R402	1-216-065-00	s	METAL, CHIP 4.7k 5% 1/10W
R403	1-216-669-11	s	METAL, CHIP 5.6k 0.5% 1/10W
R404	1-216-659-11	s	METAL, CHIP 2.2k 0.5% 1/10W
R405	1-216-113-00	s	METAL, CHIP 470k 5% 1/10W
R406	1-216-049-91	s	METAL, CHIP 1k 5% 1/10W
R407	1-216-049-91	s	METAL, CHIP 1k 5% 1/10W
R408	1-216-049-91	s	METAL, CHIP 1k 5% 1/10W
R409	1-216-057-00	s	METAL, CHIP 2.2k 5% 1/10W
R410	1-216-669-11	s	METAL, CHIP 5.6k 0.5% 1/10W
R411	1-216-659-11	s	METAL, CHIP 2.2k 0.5% 1/10W
R412	1-216-055-00	s	METAL, CHIP 1.8k 5% 1/10W
R413	1-216-057-00	s	METAL, CHIP 2.2k 5% 1/10W
R414	1-216-017-91	s	METAL, CHIP 47 5% 1/10W
R415	1-216-017-91	s	METAL, CHIP 47 5% 1/10W
R416	1-216-073-00	s	METAL, CHIP 10k 5% 1/10W
R417	1-216-643-11	s	METAL, CHIP 470 0.5% 1/10W
R418	1-216-643-11	s	METAL, CHIP 470 0.5% 1/10W
R419	1-216-653-11	s	METAL, CHIP 1.2k 0.5% 1/10W
R420	1-216-643-11	s	METAL, CHIP 470 0.5% 1/10W
R421	1-216-041-00	s	METAL, CHIP 470 5% 1/10W
R422	1-216-653-11	s	METAL, CHIP 1.2k 0.5% 1/10W
R423	1-216-643-11	s	METAL, CHIP 470 0.5% 1/10W
R424	1-216-643-11	s	METAL, CHIP 470 0.5% 1/10W
R425	1-216-663-11	s	METAL, CHIP 3.3k 0.5% 1/10W
R426	1-216-663-11	s	METAL, CHIP 3.3k 0.5% 1/10W
R427	1-216-053-00	s	METAL, CHIP 1.5k 5% 1/10W
R428	1-216-651-11	s	METAL, CHIP 1k 0.5% 1/10W
R429	1-216-639-11	s	METAL, CHIP 330 0.5% 1/10W
R430	1-216-651-11	s	METAL, CHIP 1k 0.5% 1/10W
R431	1-216-639-11	s	METAL, CHIP 330 0.5% 1/10W

(IO-149 BOARD(For NTSC); Suffix -13)

Ref. No. or Q'ty	Part No.	SP	Description
R432	1-216-065-00	s	METAL, CHIP 4.7k 5% 1/10W
R433	1-216-065-00	s	METAL, CHIP 4.7k 5% 1/10W
R434	1-216-651-11	s	METAL, CHIP 1k 0.5% 1/10W
R435	1-216-660-11	s	METAL, CHIP 2.4k 0.5% 1/10W
R436	1-216-049-91	s	METAL, CHIP 1k 5% 1/10W
R437	1-216-081-00	s	METAL, CHIP 22k 5% 1/10W
R438	1-216-653-11	s	METAL, CHIP 1.2k 0.5% 1/10W
R439	1-216-667-11	s	METAL, CHIP 4.7k 0.5% 1/10W
R440	1-216-651-11	s	METAL, CHIP 1k 0.5% 1/10W
R441	1-216-624-11	s	METAL, CHIP 75 0.5% 1/10W
R442	1-216-624-11	s	METAL, CHIP 75 0.5% 1/10W
R443	1-216-624-11	s	METAL, CHIP 75 0.5% 1/10W
R444	1-216-646-11	s	METAL, CHIP 620 0.5% 1/10W
R445	1-216-045-00	s	METAL, CHIP 680 5% 1/10W
R446	1-216-041-00	s	METAL, CHIP 470 5% 1/10W
R447	1-216-651-11	s	METAL, CHIP 1k 0.5% 1/10W
R448	1-216-041-00	s	METAL, CHIP 470 5% 1/10W
R449	1-216-660-11	s	METAL, CHIP 2.4k 0.5% 1/10W
R450	1-216-624-11	s	METAL, CHIP 75 0.5% 1/10W
R451	1-216-097-91	s	METAL, CHIP 100k 5% 1/10W
R452	1-216-073-00	s	METAL, CHIP 10k 5% 1/10W
R453	1-216-081-00	s	METAL, CHIP 22k 5% 1/10W
R454	1-216-095-00	s	METAL, CHIP 82k 5% 1/10W
R455	1-216-073-00	s	METAL, CHIP 10k 5% 1/10W
R456	1-216-624-11	s	METAL, CHIP 75 0.5% 1/10W
R457	1-216-624-11	s	METAL, CHIP 75 0.5% 1/10W
R458	1-216-675-11	s	METAL, CHIP 10k 0.5% 1/10W
R459	1-216-624-11	s	METAL, CHIP 75 0.5% 1/10W
R501	1-216-089-91	s	METAL, CHIP 47k 5% 1/10W
R502	1-216-683-11	s	METAL, CHIP 22k 0.5% 1/10W
R503	1-216-659-11	s	METAL, CHIP 2.2k 0.5% 1/10W
R504	1-216-675-11	s	METAL, CHIP 10k 0.5% 1/10W
R505	1-216-675-11	s	METAL, CHIP 10k 0.5% 1/10W
R506	1-216-659-11	s	METAL, CHIP 2.2k 0.5% 1/10W
R507	1-216-295-91	s	RES, CHIP 0
R508	1-216-073-00	s	METAL, CHIP 10k 5% 1/10W
R509	1-216-669-11	s	METAL, CHIP 5.6k 0.5% 1/10W
R510	1-216-675-11	s	METAL, CHIP 10k 0.5% 1/10W
R511	1-216-663-11	s	METAL, CHIP 3.3k 0.5% 1/10W
R512	1-216-671-11	s	METAL, CHIP 6.8k 0.5% 1/10W
R513	1-216-677-11	s	METAL, CHIP 12k 0.5% 1/10W
R515	1-216-057-00	s	METAL, CHIP 2.2k 5% 1/10W
R516	1-216-691-11	s	METAL, CHIP 47k 0.5% 1/10W
R517	1-216-677-11	s	METAL, CHIP 12k 0.5% 1/10W
R518	1-216-679-11	s	METAL, CHIP 15k 0.5% 1/10W
R519	1-216-671-11	s	METAL, CHIP 6.8k 0.5% 1/10W
R520	1-216-679-11	s	METAL, CHIP 15k 0.5% 1/10W
R521	1-216-089-91	s	METAL, CHIP 47k 5% 1/10W
R522	1-216-097-91	s	METAL, CHIP 100k 5% 1/10W
R523	1-216-089-91	s	METAL, CHIP 47k 5% 1/10W
R524	1-216-675-11	s	METAL, CHIP 10k 0.5% 1/10W
R525	1-216-651-11	s	METAL, CHIP 1k 0.5% 1/10W
R526	1-216-675-11	s	METAL, CHIP 10k 0.5% 1/10W
R527	1-216-665-11	s	METAL, CHIP 3.9k 0.5% 1/10W
R528	1-216-677-11	s	METAL, CHIP 12k 0.5% 1/10W
R529	1-216-049-91	s	METAL, CHIP 1k 5% 1/10W
R530	1-216-065-00	s	METAL, CHIP 4.7k 5% 1/10W
R531	1-216-049-91	s	METAL, CHIP 1k 5% 1/10W
R532	1-216-049-91	s	METAL, CHIP 1k 5% 1/10W

(IO-149 BOARD(For NTSC); Suffix -13)

Ref. No. or Q'ty	Part No.	SP	Description
R533	1-216-677-11	s	METAL, CHIP 12k 0.5% 1/10W
R534	1-216-051-00	s	METAL, CHIP 1.2k 5% 1/10W
R535	1-216-675-11	s	METAL, CHIP 10k 0.5% 1/10W
R536	1-216-059-00	s	METAL, CHIP 2.7k 5% 1/10W
R537	1-216-643-11	s	METAL, CHIP 470 0.5% 1/10W
R538	1-216-679-11	s	METAL, CHIP 15k 0.5% 1/10W
R539	1-216-049-91	s	METAL, CHIP 1k 5% 1/10W
R540	1-216-057-00	s	METAL, CHIP 2.2k 5% 1/10W
R541	1-216-651-11	s	METAL, CHIP 1k 0.5% 1/10W
R542	1-216-057-00	s	METAL, CHIP 2.2k 5% 1/10W
R543	1-216-073-00	s	METAL, CHIP 10k 5% 1/10W
R544	1-216-651-11	s	METAL, CHIP 1k 0.5% 1/10W
R545	1-216-683-11	s	METAL, CHIP 22k 0.5% 1/10W
R546	1-216-057-00	s	METAL, CHIP 2.2k 5% 1/10W
R547	1-216-017-91	s	METAL, CHIP 47 5% 1/10W
R548	1-216-683-11	s	METAL, CHIP 22k 0.5% 1/10W
R549	1-216-666-11	s	METAL, CHIP 4.3k 0.5% 1/10W
R550	1-216-655-11	s	METAL, CHIP 1.5k 0.5% 1/10W
R551	1-216-097-91	s	METAL, CHIP 100k 5% 1/10W
R552	1-216-059-00	s	METAL, CHIP 2.7k 5% 1/10W
R553	1-216-671-11	s	METAL, CHIP 6.8k 0.5% 1/10W
R554	1-216-655-11	s	METAL, CHIP 1.5k 0.5% 1/10W
R555	1-216-059-00	s	METAL, CHIP 2.7k 5% 1/10W
R556	1-216-073-00	s	METAL, CHIP 10k 5% 1/10W
R557	1-216-683-11	s	METAL, CHIP 22k 0.5% 1/10W
R558	1-216-017-91	s	METAL, CHIP 47 5% 1/10W
R559	1-216-687-11	s	METAL, CHIP 33k 0.5% 1/10W
R560	1-216-679-11	s	METAL, CHIP 15k 0.5% 1/10W
R561	1-216-683-11	s	METAL, CHIP 22k 0.5% 1/10W
R562	1-216-069-00	s	METAL, CHIP 6.8k 5% 1/10W
R563	1-216-687-11	s	METAL, CHIP 33k 0.5% 1/10W
R564	1-216-687-11	s	METAL, CHIP 33k 0.5% 1/10W
R565	1-216-047-91	s	METAL, CHIP 820 5% 1/10W
R566	1-216-049-91	s	METAL, CHIP 1k 5% 1/10W
R567	1-216-691-11	s	METAL, CHIP 47k 0.5% 1/10W
R568	1-216-025-91	s	METAL, CHIP 100 5% 1/10W
R569	1-216-041-00	s	METAL, CHIP 470 5% 1/10W
R570	1-216-669-11	s	METAL, CHIP 5.6k 0.5% 1/10W
R571	1-216-081-00	s	METAL, CHIP 22k 5% 1/10W
R572	1-216-049-91	s	METAL, CHIP 1k 5% 1/10W
R573	1-216-059-00	s	METAL, CHIP 2.7k 5% 1/10W
R574	1-216-681-11	s	METAL, CHIP 18k 0.5% 1/10W
R575	1-216-041-00	s	METAL, CHIP 470 5% 1/10W
R576	1-216-624-11	s	METAL, CHIP 75 0.5% 1/10W
R577	1-216-687-11	s	METAL, CHIP 33k 0.5% 1/10W
R579	1-218-772-11	s	METAL, CHIP 680k 0.5% 1/10W
R580	1-216-017-91	s	METAL, CHIP 47 5% 1/10W
R581	1-216-025-91	s	METAL, CHIP 100 5% 1/10W
R582	1-216-061-00	s	METAL, CHIP 3.3k 5% 1/10W
R583	1-216-097-91	s	METAL, CHIP 100k 5% 1/10W
R584	1-216-017-91	s	METAL, CHIP 47 5% 1/10W
R585	1-216-049-91	s	METAL, CHIP 1k 5% 1/10W
R586	1-216-049-91	s	METAL, CHIP 1k 5% 1/10W
R587	1-216-049-91	s	METAL, CHIP 1k 5% 1/10W
R588	1-216-093-00	s	METAL, CHIP 68k 5% 1/10W
R589	1-216-049-91	s	METAL, CHIP 1k 5% 1/10W
R590	1-208-797-11	s	METAL, CHIP 4.3k 0.5% 1/10W
R591	1-216-045-00	s	METAL, CHIP 680 5% 1/10W
R592	1-216-081-00	s	METAL, CHIP 22k 5% 1/10W

(IO-149 BOARD(For NTSC); Suffix -13)

Ref. No. or Q'ty	Part No.	SP	Description
R593	1-208-804-11	s	METAL, CHIP 8.2k 0.5% 1/10W
R594	1-216-025-91	s	METAL, CHIP 100 5% 1/10W
R595	1-216-025-91	s	METAL, CHIP 100 5% 1/10W
R596	1-208-774-11	s	METAL, CHIP 470 0.5% 1/10W
R597	1-208-774-11	s	METAL, CHIP 470 0.5% 1/10W
R601	1-216-089-91	s	METAL, CHIP 47k 5% 1/10W
R602	1-216-097-91	s	METAL, CHIP 100k 5% 1/10W
R604	1-216-097-91	s	METAL, CHIP 100k 5% 1/10W
R606	1-216-073-00	s	METAL, CHIP 10k 5% 1/10W
R607	1-216-065-00	s	METAL, CHIP 4.7k 5% 1/10W
R608	1-216-017-91	s	METAL, CHIP 47 5% 1/10W
R609	1-216-295-91	s	RES, CHIP 0
R610	1-216-049-91	s	METAL, CHIP 1k 5% 1/10W
R612	1-216-085-00	s	METAL, CHIP 33k 5% 1/10W
R613	1-216-065-00	s	METAL, CHIP 4.7k 5% 1/10W
R614	1-216-073-00	s	METAL, CHIP 10k 5% 1/10W
R616	1-216-017-91	s	METAL, CHIP 47 5% 1/10W
R617	1-216-085-00	s	METAL, CHIP 33k 5% 1/10W
R618	1-216-085-00	s	METAL, CHIP 33k 5% 1/10W
R619	1-216-658-11	s	METAL, CHIP 2k 0.5% 1/10W
R620	1-216-051-00	s	METAL, CHIP 1.2k 5% 1/10W
R621	1-216-658-11	s	METAL, CHIP 2k 0.5% 1/10W
R622	1-216-051-00	s	METAL, CHIP 1.2k 5% 1/10W
R623	1-216-643-11	s	METAL, CHIP 470 0.5% 1/10W
R624	1-216-037-00	s	METAL, CHIP 330 5% 1/10W
R625	1-216-648-11	s	METAL, CHIP 750 0.5% 1/10W
R626	1-216-037-00	s	METAL, CHIP 330 5% 1/10W
R627	1-216-071-00	s	METAL, CHIP 8.2k 5% 1/10W
R628	1-216-686-11	s	METAL, CHIP 30k 0.5% 1/10W
R629	1-216-069-00	s	METAL, CHIP 6.8k 5% 1/10W
R630	1-216-686-11	s	METAL, CHIP 30k 0.5% 1/10W
R631	1-216-041-00	s	METAL, CHIP 470 5% 1/10W
R632	1-216-041-00	s	METAL, CHIP 470 5% 1/10W
R633	1-216-017-91	s	METAL, CHIP 47 5% 1/10W
R634	1-216-097-91	s	METAL, CHIP 100k 5% 1/10W
R635	1-216-667-11	s	METAL, CHIP 4.7k 0.5% 1/10W
R637	1-216-115-00	s	METAL, CHIP 560k 5% 1/10W
R638	1-216-641-11	s	METAL, CHIP 390 0.5% 1/10W
R639	1-216-017-91	s	METAL, CHIP 47 5% 1/10W
R640	1-216-667-11	s	METAL, CHIP 4.7k 0.5% 1/10W
R641	1-216-641-11	s	METAL, CHIP 390 0.5% 1/10W
R642	1-216-665-11	s	METAL, CHIP 3.9k 0.5% 1/10W
R643	1-216-677-11	s	METAL, CHIP 12k 0.5% 1/10W
R644	1-216-638-11	s	METAL, CHIP 300 0.5% 1/10W
R645	1-216-638-11	s	METAL, CHIP 300 0.5% 1/10W
R646	1-216-049-91	s	METAL, CHIP 1k 5% 1/10W
R647	1-216-049-91	s	METAL, CHIP 1k 5% 1/10W
R648	1-216-037-00	s	METAL, CHIP 330 5% 1/10W
R649	1-216-037-00	s	METAL, CHIP 330 5% 1/10W
R650	1-216-049-91	s	METAL, CHIP 1k 5% 1/10W
R651	1-216-049-91	s	METAL, CHIP 1k 5% 1/10W
R652	1-216-025-91	s	METAL, CHIP 100 5% 1/10W
R653	1-216-025-91	s	METAL, CHIP 100 5% 1/10W
R654	1-216-025-91	s	METAL, CHIP 100 5% 1/10W
R655	1-216-049-91	s	METAL, CHIP 1k 5% 1/10W
R656	1-216-049-91	s	METAL, CHIP 1k 5% 1/10W
R657	1-216-025-91	s	METAL, CHIP 100 5% 1/10W
R658	1-216-025-91	s	METAL, CHIP 100 5% 1/10W
R659	1-216-049-91	s	METAL, CHIP 1k 5% 1/10W

(IO-149 BOARD(For NTSC); Suffix -13)

Ref. No. or Q'ty	Part No.	SP	Description
RB101	1-239-999-11	s	RESISTOR BLOCK, CHIP 1k x 4
RB102	1-239-998-11	s	RESISTOR BLOCK, CHIP 100 x 4
RB103	1-233-237-11	s	RESISTOR BLOCK, CHIP 100k x 4
RB701	1-233-234-11	s	RESISTOR BLOCK, CHIP 2.2k x 4
RV101	1-237-034-11	s	RES, ADJ METAL 2k
RV102	1-237-034-11	s	RES, ADJ METAL 2k
RV103	1-237-034-11	s	RES, ADJ METAL 2k
RV104	1-237-034-11	s	RES, ADJ METAL 2k
RV105	1-237-035-11	s	RES, ADJ METAL 5k
RV106	1-237-035-11	s	RES, ADJ METAL 5k
RV107	1-237-036-11	s	RES, ADJ METAL 10k
RV108	1-237-036-11	s	RES, ADJ METAL 10k
RV109	1-237-036-11	s	RES, ADJ METAL 10k
RV110	1-237-035-11	s	RES, ADJ METAL 5k
RV111	1-237-035-11	s	RES, ADJ METAL 5k
RV112	1-237-034-11	s	RES, ADJ METAL 2k
RV301	1-237-033-11	s	RES, ADJ METAL 1k
RV302	1-237-034-11	s	RES, ADJ METAL 2k
RV303	1-237-032-11	s	RES, ADJ METAL 500
RV304	1-237-033-11	s	RES, ADJ METAL 1k
RV305	1-237-035-11	s	RES, ADJ METAL 5k
RV306	1-237-033-11	s	RES, ADJ METAL 1k
RV307	1-237-033-11	s	RES, ADJ METAL 1k
RV308	1-237-032-11	s	RES, ADJ METAL 500
RV309	1-237-034-11	s	RES, ADJ METAL 2k
RV310	1-237-034-11	s	RES, ADJ METAL 2k
RV311	1-237-032-11	s	RES, ADJ METAL 500
RV312	1-237-035-11	s	RES, ADJ METAL 5k
RV313	1-237-035-11	s	RES, ADJ METAL 5k
RV314	1-237-032-11	s	RES, ADJ METAL 500
RV315	1-237-032-11	s	RES, ADJ METAL 500
RV316	1-237-033-11	s	RES, ADJ METAL 1k
RV317	1-237-033-11	s	RES, ADJ METAL 1k
RV318	1-237-030-11	s	RES, ADJ METAL 100
RV319	1-237-030-11	s	RES, ADJ METAL 100
RV501	1-237-035-11	s	RES, ADJ METAL 5k
RV502	1-237-036-11	s	RES, ADJ METAL 10k
RV503	1-237-037-11	s	RES, ADJ METAL 20k
RV504	1-237-036-11	s	RES, ADJ METAL 10k
RV505	1-237-034-11	s	RES, ADJ METAL 2k
RV506	1-237-033-11	s	RES, ADJ METAL 1k
RV601	1-237-035-11	s	RES, ADJ METAL 5k
TH101	1-809-352-11	s	THERMISTOR, CHIP 1.5k
TP101	1-535-877-22	o	CHECKER, CHIP
TP102	1-535-877-22	o	CHECKER, CHIP
TP103	1-535-877-22	o	CHECKER, CHIP
TP301	1-535-877-22	o	CHECKER, CHIP
TP302	1-535-877-22	o	CHECKER, CHIP
TP303	1-535-877-22	o	CHECKER, CHIP
TP304	1-535-877-22	o	CHECKER, CHIP
TP305	1-535-877-22	o	CHECKER, CHIP
TP306	1-535-877-22	o	CHECKER, CHIP
TP307	1-535-877-22	o	CHECKER, CHIP
TP501	1-535-877-22	o	CHECKER, CHIP
TP502	1-535-877-22	o	CHECKER, CHIP
TP601	1-535-877-22	o	CHECKER, CHIP
TP602	1-535-877-22	o	CHECKER, CHIP
TP603	1-535-877-22	o	CHECKER, CHIP

(IO-149 BOARD(For NTSC); Suffix -13)

Ref. No. or Q'ty	Part No.	SP	Description
TP604	1-535-877-22	o	CHECKER, CHIP
X101	1-767-260-11	s	CRYSTAL 13.50MHz
X102	1-767-260-11	s	CRYSTAL 13.50MHz
X103	1-767-260-11	s	CRYSTAL 13.50MHz
X601	1-767-262-11	s	CRYSTAL 27.00MHz
X602	1-527-722-00	s	CRYSTAL 14.31818MHz

IO-149 BOARD(For NTSC); Suffix -12

Ref. No.
or Q'ty Part No. SP Description

This list corresponds to the board suffix number -12.

The parts marked * are different, depending on the product serial numbers, as shown below:
*1) Serial number; 10001 through 10620 (For DSR-60 J)
Serial number; 10001 through 10360 (For DSR-60 UC)
*2) Serial number; 10621 and higher (For DSR-60 J)
Serial number; 10361 and higher (For DSR-60 UC)

Ref. No. or Q'ty	Part No.	SP	Description
1pc	A-8312-954-A	o	MOUNTED CIRCUIT BOARD, IO-149B
1pc	7-621-759-45	s	+PSW, 2.6x6
1pc	3-179-085-01	s	LEVER (L), PRINTED CIRCUIT BOARD
1pc	3-179-084-01	s	LEVER (R), PRINTED CIRCUIT BOARD
C1	1-126-392-11	s	ELECT, CHIP 100uF 20% 6.3V
C2	1-163-038-91	s	CERAMIC, CHIP 0.1uF 25V
C3	1-126-392-11	s	ELECT, CHIP 100uF 20% 6.3V
C4	1-163-038-91	s	CERAMIC, CHIP 0.1uF 25V
C5	1-126-392-11	s	ELECT, CHIP 100uF 20% 6.3V
C6	1-163-038-91	s	CERAMIC, CHIP 0.1uF 25V
C11	1-126-396-11	s	ELECT, CHIP 47uF 20% 16V
C12	1-163-038-91	s	CERAMIC, CHIP 0.1uF 25V
C13	1-126-396-11	s	ELECT, CHIP 47uF 20% 16V
C14	1-163-038-91	s	CERAMIC, CHIP 0.1uF 25V
C15	1-126-396-11	s	ELECT, CHIP 47uF 20% 16V
C16	1-163-038-91	s	CERAMIC, CHIP 0.1uF 25V
C21	1-126-396-11	s	ELECT, CHIP 47uF 20% 16V
C22	1-163-038-91	s	CERAMIC, CHIP 0.1uF 25V
C23	1-126-396-11	s	ELECT, CHIP 47uF 20% 16V
C24	1-163-038-91	s	CERAMIC, CHIP 0.1uF 25V
C25	1-126-396-11	s	ELECT, CHIP 47uF 20% 16V
C26	1-163-038-91	s	CERAMIC, CHIP 0.1uF 25V
C31	1-126-396-11	s	ELECT, CHIP 47uF 20% 16V
C32	1-163-038-91	s	CERAMIC, CHIP 0.1uF 25V
C33	1-126-396-11	s	ELECT, CHIP 47uF 20% 16V
C34	1-163-038-91	s	CERAMIC, CHIP 0.1uF 25V
C35	1-126-396-11	s	ELECT, CHIP 47uF 20% 16V
C36	1-163-038-91	s	CERAMIC, CHIP 0.1uF 25V
C37	1-126-396-11	s	ELECT, CHIP 47uF 20% 16V
C38	1-163-038-91	s	CERAMIC, CHIP 0.1uF 25V
C39	1-126-396-11	s	ELECT, CHIP 47uF 20% 16V
C40	1-163-038-91	s	CERAMIC, CHIP 0.1uF 25V
C101	1-164-004-11	s	CERAMIC, CHIP 0.1uF 10% 25V
C102	1-163-037-11	s	CERAMIC, CHIP 0.022uF 10% 25V
C103	1-126-396-11	s	ELECT, CHIP 47uF 20% 16V
C104	1-163-037-11	s	CERAMIC, CHIP 0.022uF 10% 25V
C105	1-163-037-11	s	CERAMIC, CHIP 0.022uF 10% 25V
C106	1-163-037-11	s	CERAMIC, CHIP 0.022uF 10% 25V
C107	1-163-037-11	s	CERAMIC, CHIP 0.022uF 10% 25V
C108	1-163-235-11	s	CERAMIC, CHIP 22pF 5% 50V
C109	1-163-037-11	s	CERAMIC, CHIP 0.022uF 10% 25V
C110	1-164-004-11	s	CERAMIC, CHIP 0.1uF 10% 25V
C111	1-164-004-11	s	CERAMIC, CHIP 0.1uF 10% 25V
C112	1-163-275-11	s	CERAMIC, CHIP 0.001uF 5% 50V
C113	1-163-275-11	s	CERAMIC, CHIP 0.001uF 5% 50V
C114	1-164-004-11	s	CERAMIC, CHIP 0.1uF 10% 25V
C115	1-164-004-11	s	CERAMIC, CHIP 0.1uF 10% 25V
C116	1-163-275-11	s	CERAMIC, CHIP 0.001uF 5% 50V
C117	1-163-275-11	s	CERAMIC, CHIP 0.001uF 5% 50V
C118	1-163-237-11	s	CERAMIC, CHIP 27pF 5% 50V

(IO-149 BOARD(For NTSC); Suffix -12)

Ref. No. or Q'ty	Part No.	SP	Description
C119	1-163-237-11	s	CERAMIC, CHIP 27pF 5% 50V
C120	1-163-037-11	s	CERAMIC, CHIP 0.022uF 10% 25V
C121	1-163-037-11	s	CERAMIC, CHIP 0.022uF 10% 25V
C122	1-163-037-11	s	CERAMIC, CHIP 0.022uF 10% 25V
C123	1-164-004-11	s	CERAMIC, CHIP 0.1uF 10% 25V
C124	1-163-037-11	s	CERAMIC, CHIP 0.022uF 10% 25V
C125	1-126-392-11	s	ELECT, CHIP 100uF 20% 6.3V
C126	1-163-275-11	s	CERAMIC, CHIP 0.001uF 5% 50V
C127	1-164-004-11	s	CERAMIC, CHIP 0.1uF 10% 25V
C128	1-163-037-11	s	CERAMIC, CHIP 0.022uF 10% 25V
C129	1-163-037-11	s	CERAMIC, CHIP 0.022uF 10% 25V
C130	1-163-275-11	s	CERAMIC, CHIP 0.001uF 5% 50V
C131	1-163-037-11	s	CERAMIC, CHIP 0.022uF 10% 25V
C132	1-163-037-11	s	CERAMIC, CHIP 0.022uF 10% 25V
C133	1-163-237-11	s	CERAMIC, CHIP 27pF 5% 50V
C134	1-126-394-11	s	ELECT, CHIP 10uF 20% 16V
C135	1-126-394-11	s	ELECT, CHIP 10uF 20% 16V
C136	1-163-037-11	s	CERAMIC, CHIP 0.022uF 10% 25V
C137	1-163-037-11	s	CERAMIC, CHIP 0.022uF 10% 25V
C138	1-163-037-11	s	CERAMIC, CHIP 0.022uF 10% 25V
C139	1-163-037-11	s	CERAMIC, CHIP 0.022uF 10% 25V
C140	1-163-037-11	s	CERAMIC, CHIP 0.022uF 10% 25V
C141	1-163-037-11	s	CERAMIC, CHIP 0.022uF 10% 25V
C142	1-126-392-11	s	ELECT, CHIP 100uF 20% 6.3V
C143	1-126-392-11	s	ELECT, CHIP 100uF 20% 6.3V
C144	1-163-037-11	s	CERAMIC, CHIP 0.022uF 10% 25V
C145	1-163-037-11	s	CERAMIC, CHIP 0.022uF 10% 25V
C146	1-163-037-11	s	CERAMIC, CHIP 0.022uF 10% 25V
C147	1-163-037-11	s	CERAMIC, CHIP 0.022uF 10% 25V
C148	1-163-037-11	s	CERAMIC, CHIP 0.022uF 10% 25V
C149	1-163-037-11	s	CERAMIC, CHIP 0.022uF 10% 25V
C150	1-163-037-11	s	CERAMIC, CHIP 0.022uF 10% 25V
C151	1-163-037-11	s	CERAMIC, CHIP 0.022uF 10% 25V
C152	1-163-037-11	s	CERAMIC, CHIP 0.022uF 10% 25V
C153	1-126-391-11	s	ELECT, CHIP 47uF 20% 6.3V
C154	1-163-231-11	s	CERAMIC, CHIP 15pF 5% 50V
C155	1-163-037-11	s	CERAMIC, CHIP 0.022uF 10% 25V
C156	1-163-038-91	s	CERAMIC, CHIP 0.1uF 25V
C157	1-163-037-11	s	CERAMIC, CHIP 0.022uF 10% 25V
C158	1-163-037-11	s	CERAMIC, CHIP 0.022uF 10% 25V
C159	1-163-038-91	s	CERAMIC, CHIP 0.1uF 25V
C160	1-163-037-11	s	CERAMIC, CHIP 0.022uF 10% 25V
C161	1-163-037-11	s	CERAMIC, CHIP 0.022uF 10% 25V
C162	1-163-038-91	s	CERAMIC, CHIP 0.1uF 25V
C163	1-163-038-91	s	CERAMIC, CHIP 0.1uF 25V
C164	1-163-038-91	s	CERAMIC, CHIP 0.1uF 25V
C165	1-126-391-11	s	ELECT, CHIP 47uF 20% 6.3V
C166	1-163-037-11	s	CERAMIC, CHIP 0.022uF 10% 25V
C167	1-126-391-11	s	ELECT, CHIP 47uF 20% 6.3V
C168	1-163-037-11	s	CERAMIC, CHIP 0.022uF 10% 25V
C169	1-163-037-11	s	CERAMIC, CHIP 0.022uF 10% 25V
C170	1-163-037-11	s	CERAMIC, CHIP 0.022uF 10% 25V
C171	1-126-391-11	s	ELECT, CHIP 47uF 20% 6.3V
C172	1-126-396-11	s	ELECT, CHIP 47uF 20% 16V
C173	1-126-396-11	s	ELECT, CHIP 47uF 20% 16V
C174	1-126-391-11	s	ELECT, CHIP 47uF 20% 6.3V
C175	1-126-391-11	s	ELECT, CHIP 47uF 20% 6.3V
C176	1-126-391-11	s	ELECT, CHIP 47uF 20% 6.3V
C177	1-126-391-11	s	ELECT, CHIP 47uF 20% 6.3V

(IO-149 BOARD(For NTSC); Suffix -12)

Ref. No. or Q'ty	Part No.	SP	Description	
C178	1-126-391-11	s	ELECT, CHIP 47uF 20% 6.3V	
C179	1-163-037-11	s	CERAMIC, CHIP 0.022uF 10% 25V	
C180	1-163-037-11	s	CERAMIC, CHIP 0.022uF 10% 25V	
C181	1-163-037-11	s	CERAMIC, CHIP 0.022uF 10% 25V	
C182	1-163-037-11	s	CERAMIC, CHIP 0.022uF 10% 25V	
C183	1-163-037-11	s	CERAMIC, CHIP 0.022uF 10% 25V	
C184	1-163-037-11	s	CERAMIC, CHIP 0.022uF 10% 25V	
C185	1-163-037-11	s	CERAMIC, CHIP 0.022uF 10% 25V	
C186	1-163-037-11	s	CERAMIC, CHIP 0.022uF 10% 25V	
C187	1-163-037-11	s	CERAMIC, CHIP 0.022uF 10% 25V	
C188	1-163-235-11	s	CERAMIC, CHIP 22pF 5% 50V	
C189	1-163-235-11	s	CERAMIC, CHIP 22pF 5% 50V	
C190	1-163-099-00	s	CERAMIC, CHIP 18pF 5% 50V	*1)
	1-163-231-11	s	CERAMIC, CHIP 15pF 5% 50V	*2)
C191	1-163-037-11	s	CERAMIC, CHIP 0.022uF 10% 25V	
C192	1-163-037-11	s	CERAMIC, CHIP 0.022uF 10% 25V	
C193	1-163-037-11	s	CERAMIC, CHIP 0.022uF 10% 25V	
C194	1-126-401-11	s	ELECT, CHIP 1uF 20% 50V	
C195	1-126-401-11	s	ELECT, CHIP 1uF 20% 50V	
C196	1-126-394-11	s	ELECT, CHIP 10uF 20% 16V	
C197	1-126-401-11	s	ELECT, CHIP 1uF 20% 50V	
C198	1-126-394-11	s	ELECT, CHIP 10uF 20% 16V	
C199	1-163-038-91	s	CERAMIC, CHIP 0.1uF 25V	
C200	1-126-401-11	s	ELECT, CHIP 1uF 20% 50V	
C201	1-163-038-91	s	CERAMIC, CHIP 0.1uF 25V	
C202	1-163-809-11	s	CERAMIC, CHIP 0.047uF 10% 25V	
C203	1-163-809-11	s	CERAMIC, CHIP 0.047uF 10% 25V	
C204	1-163-809-11	s	CERAMIC, CHIP 0.047uF 10% 25V	
C205	1-163-227-11	s	CERAMIC, CHIP 10pF 5% 50V	
C206	1-163-037-11	s	CERAMIC, CHIP 0.022uF 10% 25V	
C207	1-163-037-11	s	CERAMIC, CHIP 0.022uF 10% 25V	
C208	1-163-037-11	s	CERAMIC, CHIP 0.022uF 10% 25V	
C209	1-163-037-11	s	CERAMIC, CHIP 0.022uF 10% 25V	
C210	1-163-037-11	s	CERAMIC, CHIP 0.022uF 10% 25V	
C211	1-126-396-11	s	ELECT, CHIP 47uF 20% 16V	
C212	1-163-037-11	s	CERAMIC, CHIP 0.022uF 10% 25V	
C213	1-163-227-11	s	CERAMIC, CHIP 10pF 5% 50V	
C214	1-163-037-11	s	CERAMIC, CHIP 0.022uF 10% 25V	
C215	1-126-396-11	s	ELECT, CHIP 47uF 20% 16V	
C216	1-163-037-11	s	CERAMIC, CHIP 0.022uF 10% 25V	
C217	1-126-390-11	s	ELECT, CHIP 22uF 20% 6.3V	
C218	1-163-037-11	s	CERAMIC, CHIP 0.022uF 10% 25V	
C219	1-163-037-11	s	CERAMIC, CHIP 0.022uF 10% 25V	
C220	1-163-249-11	s	CERAMIC, CHIP 82pF 5% 50V	
C221	1-163-243-11	s	CERAMIC, CHIP 47pF 5% 50V	
C222	1-163-227-11	s	CERAMIC, CHIP 10pF 5% 50V	
C223	1-163-118-00	s	CERAMIC, CHIP 110pF 5% 50V	
C224	1-163-037-11	s	CERAMIC, CHIP 0.022uF 10% 25V	
C225	1-163-224-11	s	CERAMIC, CHIP 7pF 50V	
C226	1-163-037-11	s	CERAMIC, CHIP 0.022uF 10% 25V	
C228	1-163-231-11	s	CERAMIC, CHIP 15pF 5% 50V	
C229	1-163-259-91	s	CERAMIC, CHIP 220pF 5% 50V	
C230	1-126-390-11	s	ELECT, CHIP 22uF 20% 6.3V	
C231	1-163-037-11	s	CERAMIC, CHIP 0.022uF 10% 25V	
C232	1-163-037-11	s	CERAMIC, CHIP 0.022uF 10% 25V	
C233	1-163-037-11	s	CERAMIC, CHIP 0.022uF 10% 25V	
C234	1-163-037-11	s	CERAMIC, CHIP 0.022uF 10% 25V	
C235	1-163-227-11	s	CERAMIC, CHIP 10pF 5% 50V	

(IO-149 BOARD(For NTSC); Suffix -12)

Ref. No. or Q'ty	Part No.	SP	Description
C301	1-126-391-11	s	ELECT, CHIP 47uF 20% 6.3V
C302	1-126-391-11	s	ELECT, CHIP 47uF 20% 6.3V
C303	1-163-038-91	s	CERAMIC, CHIP 0.1uF 25V
C304	1-126-391-11	s	ELECT, CHIP 47uF 20% 6.3V
C305	1-126-391-11	s	ELECT, CHIP 47uF 20% 6.3V
C306	1-163-038-91	s	CERAMIC, CHIP 0.1uF 25V
C307	1-163-038-91	s	CERAMIC, CHIP 0.1uF 25V
C308	1-163-038-91	s	CERAMIC, CHIP 0.1uF 25V
C309	1-163-231-11	s	CERAMIC, CHIP 15pF 5% 50V
C310	1-163-037-11	s	CERAMIC, CHIP 0.022uF 10% 25V
C311	1-163-120-00	s	CERAMIC, CHIP 130pF 5% 50V
C312	1-163-037-11	s	CERAMIC, CHIP 0.022uF 10% 25V
C313	1-163-038-91	s	CERAMIC, CHIP 0.1uF 25V
C314	1-163-038-91	s	CERAMIC, CHIP 0.1uF 25V
C315	1-163-037-11	s	CERAMIC, CHIP 0.022uF 10% 25V
C316	1-163-037-11	s	CERAMIC, CHIP 0.022uF 10% 25V
C317	1-163-037-11	s	CERAMIC, CHIP 0.022uF 10% 25V
C318	1-163-231-11	s	CERAMIC, CHIP 15pF 5% 50V
C319	1-163-120-00	s	CERAMIC, CHIP 130pF 5% 50V
C320	1-163-037-11	s	CERAMIC, CHIP 0.022uF 10% 25V
C321	1-126-391-11	s	ELECT, CHIP 47uF 20% 6.3V
C324	1-163-038-91	s	CERAMIC, CHIP 0.1uF 25V
C326	1-126-396-11	s	ELECT, CHIP 47uF 20% 16V
C327	1-126-391-11	s	ELECT, CHIP 47uF 20% 6.3V
C328	1-163-037-11	s	CERAMIC, CHIP 0.022uF 10% 25V
C329	1-126-396-11	s	ELECT, CHIP 47uF 20% 16V
C330	1-163-037-11	s	CERAMIC, CHIP 0.022uF 10% 25V
C331	1-126-396-11	s	ELECT, CHIP 47uF 20% 16V
C332	1-163-038-91	s	CERAMIC, CHIP 0.1uF 25V
C333	1-163-038-91	s	CERAMIC, CHIP 0.1uF 25V
C334	1-163-224-11	s	CERAMIC, CHIP 7pF 50V
C335	1-163-231-11	s	CERAMIC, CHIP 15pF 5% 50V
C336	1-163-037-11	s	CERAMIC, CHIP 0.022uF 10% 25V
C337	1-163-231-11	s	CERAMIC, CHIP 15pF 5% 50V
C338	1-163-038-91	s	CERAMIC, CHIP 0.1uF 25V
C339	1-163-243-11	s	CERAMIC, CHIP 47pF 5% 50V
C340	1-163-243-11	s	CERAMIC, CHIP 47pF 5% 50V
C341	1-163-239-11	s	CERAMIC, CHIP 33pF 5% 50V
C342	1-163-239-11	s	CERAMIC, CHIP 33pF 5% 50V
C343	1-126-392-11	s	ELECT, CHIP 100uF 20% 6.3V
C344	1-163-235-11	s	CERAMIC, CHIP 22pF 5% 50V
C345	1-163-235-11	s	CERAMIC, CHIP 22pF 5% 50V
C346	1-126-394-11	s	ELECT, CHIP 10uF 20% 16V
C347	1-126-394-11	s	ELECT, CHIP 10uF 20% 16V
C348	1-126-391-11	s	ELECT, CHIP 47uF 20% 6.3V
C349	1-163-809-11	s	CERAMIC, CHIP 0.047uF 10% 25V
C350	1-126-391-11	s	ELECT, CHIP 47uF 20% 6.3V
C351	1-163-038-91	s	CERAMIC, CHIP 0.1uF 25V
C352	1-163-037-11	s	CERAMIC, CHIP 0.022uF 10% 25V
C353	1-163-037-11	s	CERAMIC, CHIP 0.022uF 10% 25V
C354	1-163-038-91	s	CERAMIC, CHIP 0.1uF 25V
C355	1-163-227-11	s	CERAMIC, CHIP 10pF 5% 50V
C356	1-163-037-11	s	CERAMIC, CHIP 0.022uF 10% 25V
C357	1-163-037-11	s	CERAMIC, CHIP 0.022uF 10% 25V
C358	1-163-037-11	s	CERAMIC, CHIP 0.022uF 10% 25V
C359	1-163-038-91	s	CERAMIC, CHIP 0.1uF 25V
C360	1-163-038-91	s	CERAMIC, CHIP 0.1uF 25V
C361	1-163-038-91	s	CERAMIC, CHIP 0.1uF 25V
C362	1-163-243-11	s	CERAMIC, CHIP 47pF 5% 50V

(IO-149 BOARD(For NTSC); Suffix -12)

Ref. No. or Q'ty	Part No.	SP	Description	
C363	1-163-037-11	s	CERAMIC, CHIP 0.022uF 10% 25V	
C364	1-163-037-11	s	CERAMIC, CHIP 0.022uF 10% 25V	
C365	1-163-222-11	s	CERAMIC, CHIP 5pF 50V	
C366	1-163-037-11	s	CERAMIC, CHIP 0.022uF 10% 25V	
C367	1-163-243-11	s	CERAMIC, CHIP 47pF 5% 50V	
C368	1-163-037-11	s	CERAMIC, CHIP 0.022uF 10% 25V	
C369	1-163-037-11	s	CERAMIC, CHIP 0.022uF 10% 25V	
C370	1-163-037-11	s	CERAMIC, CHIP 0.022uF 10% 25V	
C371	1-163-037-11	s	CERAMIC, CHIP 0.022uF 10% 25V	
C372	1-163-037-11	s	CERAMIC, CHIP 0.022uF 10% 25V	
C373	1-126-391-11	s	ELECT, CHIP 47uF 20% 6.3V	
C374	1-163-037-11	s	CERAMIC, CHIP 0.022uF 10% 25V	
C375	1-163-037-11	s	CERAMIC, CHIP 0.022uF 10% 25V	
C376	1-163-037-11	s	CERAMIC, CHIP 0.022uF 10% 25V	
C377	1-126-391-11	s	ELECT, CHIP 47uF 20% 6.3V	
C378	1-126-396-11	s	ELECT, CHIP 47uF 20% 16V	
C379	1-163-037-11	s	CERAMIC, CHIP 0.022uF 10% 25V	
C380	1-163-037-11	s	CERAMIC, CHIP 0.022uF 10% 25V	
C381	1-163-227-11	s	CERAMIC, CHIP 10pF 5% 50V	
C382	1-163-037-11	s	CERAMIC, CHIP 0.022uF 10% 25V	
C383	1-163-227-11	s	CERAMIC, CHIP 10pF 5% 50V	
C384	1-163-037-11	s	CERAMIC, CHIP 0.022uF 10% 25V	
C385	1-163-038-91	s	CERAMIC, CHIP 0.1uF 25V	
C386	1-163-038-91	s	CERAMIC, CHIP 0.1uF 25V	
C387	1-163-037-11	s	CERAMIC, CHIP 0.022uF 10% 25V	
C388	1-163-245-11	s	CERAMIC, CHIP 56pF 5% 50V	*1)
	1-163-113-00	s	CERAMIC, CHIP 68pF 5% 50V	*2)
C501	1-163-235-11	s	CERAMIC, CHIP 22pF 5% 50V	
C502	1-163-038-91	s	CERAMIC, CHIP 0.1uF 25V	
C503	1-126-394-11	s	ELECT, CHIP 10uF 20% 16V	
C504	1-126-394-11	s	ELECT, CHIP 10uF 20% 16V	
C505	1-126-394-11	s	ELECT, CHIP 10uF 20% 16V	
C506	1-163-037-11	s	CERAMIC, CHIP 0.022uF 10% 25V	
C507	1-126-396-11	s	ELECT, CHIP 47uF 20% 16V	
C508	1-126-396-11	s	ELECT, CHIP 47uF 20% 16V	
C509	1-126-394-11	s	ELECT, CHIP 10uF 20% 16V	
C510	1-126-394-11	s	ELECT, CHIP 10uF 20% 16V	
C511	1-126-401-11	s	ELECT, CHIP 1uF 20% 50V	
C512	1-163-235-11	s	CERAMIC, CHIP 22pF 5% 50V	
C513	1-164-222-11	s	CERAMIC, CHIP 0.22uF 25V	
C514	1-163-038-91	s	CERAMIC, CHIP 0.1uF 25V	
C515	1-163-038-91	s	CERAMIC, CHIP 0.1uF 25V	
C516	1-163-121-00	s	CERAMIC, CHIP 150pF 5% 50V	
C517	1-164-232-11	s	CERAMIC, CHIP 0.01uF 10% 100V	
C518	1-163-037-11	s	CERAMIC, CHIP 0.022uF 10% 25V	
C519	1-163-038-91	s	CERAMIC, CHIP 0.1uF 25V	
C520	1-163-038-91	s	CERAMIC, CHIP 0.1uF 25V	
C521	1-126-396-11	s	ELECT, CHIP 47uF 20% 16V	
C522	1-126-393-11	s	ELECT, CHIP 33uF 20% 10V	
C523	1-163-038-91	s	CERAMIC, CHIP 0.1uF 25V	
C524	1-163-239-11	s	CERAMIC, CHIP 33pF 5% 50V	
C525	1-163-259-91	s	CERAMIC, CHIP 220pF 5% 50V	
C526	1-163-038-91	s	CERAMIC, CHIP 0.1uF 25V	
C527	1-163-037-11	s	CERAMIC, CHIP 0.022uF 10% 25V	
C528	1-163-038-91	s	CERAMIC, CHIP 0.1uF 25V	
C529	1-163-037-11	s	CERAMIC, CHIP 0.022uF 10% 25V	
C530	1-163-038-91	s	CERAMIC, CHIP 0.1uF 25V	

(IO-149 BOARD(For NTSC); Suffix -12)

Ref. No. or Q'ty	Part No.	SP	Description
C531	1-163-038-91	s	CERAMIC, CHIP 0.1uF 25V
C532	1-163-038-91	s	CERAMIC, CHIP 0.1uF 25V
C533	1-163-038-91	s	CERAMIC, CHIP 0.1uF 25V
C534	1-126-391-11	s	ELECT, CHIP 47uF 20% 6.3V
C535	1-163-038-91	s	CERAMIC, CHIP 0.1uF 25V
C536	1-163-038-91	s	CERAMIC, CHIP 0.1uF 25V
C537	1-163-989-11	s	CERAMIC, CHIP 0.033uF 10% 25V
C538	1-163-121-00	s	CERAMIC, CHIP 150pF 5% 50V
C539	1-163-038-91	s	CERAMIC, CHIP 0.1uF 25V
C540	1-163-038-91	s	CERAMIC, CHIP 0.1uF 25V
C541	1-163-038-91	s	CERAMIC, CHIP 0.1uF 25V
C543	1-126-391-11	s	ELECT, CHIP 47uF 20% 6.3V
C544	1-126-391-11	s	ELECT, CHIP 47uF 20% 6.3V
C545	1-163-038-91	s	CERAMIC, CHIP 0.1uF 25V
C546	1-163-239-11	s	CERAMIC, CHIP 33pF 5% 50V
C547	1-163-037-11	s	CERAMIC, CHIP 0.022uF 10% 25V
C548	1-163-038-91	s	CERAMIC, CHIP 0.1uF 25V
C549	1-126-391-11	s	ELECT, CHIP 47uF 20% 6.3V
C550	1-163-251-11	s	CERAMIC, CHIP 100pF 5% 50V
C551	1-163-037-11	s	CERAMIC, CHIP 0.022uF 10% 25V
C552	1-163-038-91	s	CERAMIC, CHIP 0.1uF 25V
C553	1-163-038-91	s	CERAMIC, CHIP 0.1uF 25V
C601	1-163-037-11	s	CERAMIC, CHIP 0.022uF 10% 25V
C602	1-163-037-11	s	CERAMIC, CHIP 0.022uF 10% 25V
C603	1-163-037-11	s	CERAMIC, CHIP 0.022uF 10% 25V
C604	1-163-275-11	s	CERAMIC, CHIP 0.001uF 5% 50V
C605	1-126-401-11	s	ELECT, CHIP 1uF 20% 50V
C606	1-126-404-11	s	ELECT, CHIP 4.7uF 20% 50V
C607	1-164-232-11	s	CERAMIC, CHIP 0.01uF 10% 100V
C608	1-163-037-11	s	CERAMIC, CHIP 0.022uF 10% 25V
C609	1-163-037-11	s	CERAMIC, CHIP 0.022uF 10% 25V
C610	1-163-259-91	s	CERAMIC, CHIP 220pF 5% 50V
C611	1-163-037-11	s	CERAMIC, CHIP 0.022uF 10% 25V
C612	1-163-227-11	s	CERAMIC, CHIP 10pF 5% 50V
C613	1-163-239-11	s	CERAMIC, CHIP 33pF 5% 50V
C614	1-163-243-11	s	CERAMIC, CHIP 47pF 5% 50V
C615	1-163-113-00	s	CERAMIC, CHIP 68pF 5% 50V
C616	1-164-232-11	s	CERAMIC, CHIP 0.01uF 10% 100V
C617	1-163-121-00	s	CERAMIC, CHIP 150pF 5% 50V
C618	1-164-232-11	s	CERAMIC, CHIP 0.01uF 10% 100V
C619	1-163-263-11	s	CERAMIC, CHIP 330pF 5% 50V
C620	1-163-809-11	s	CERAMIC, CHIP 0.047uF 10% 25V
C621	1-163-809-11	s	CERAMIC, CHIP 0.047uF 10% 25V
C622	1-163-038-91	s	CERAMIC, CHIP 0.1uF 25V
C623	1-163-038-91	s	CERAMIC, CHIP 0.1uF 25V
C624	1-163-038-91	s	CERAMIC, CHIP 0.1uF 25V
C625	1-163-037-11	s	CERAMIC, CHIP 0.022uF 10% 25V
C626	1-163-227-11	s	CERAMIC, CHIP 10pF 5% 50V
C627	1-126-391-11	s	ELECT, CHIP 47uF 20% 6.3V
C628	1-163-037-11	s	CERAMIC, CHIP 0.022uF 10% 25V
C629	1-126-391-11	s	ELECT, CHIP 47uF 20% 6.3V
C631	1-163-227-11	s	CERAMIC, CHIP 10pF 5% 50V
C632	1-126-401-11	s	ELECT, CHIP 1uF 20% 50V
C633	1-163-037-11	s	CERAMIC, CHIP 0.022uF 10% 25V
C634	1-163-243-11	s	CERAMIC, CHIP 47pF 5% 50V
C635	1-163-037-11	s	CERAMIC, CHIP 0.022uF 10% 25V
C636	1-163-037-11	s	CERAMIC, CHIP 0.022uF 10% 25V
C637	1-163-037-11	s	CERAMIC, CHIP 0.022uF 10% 25V
C638	1-163-038-91	s	CERAMIC, CHIP 0.1uF 25V

(IO-149 BOARD(For NTSC); Suffix -12)

Ref. No. or Q'ty	Part No.	SP	Description
C639	1-163-235-11	s	CERAMIC, CHIP 22pF 5% 50V
C640	1-163-037-11	s	CERAMIC, CHIP 0.022uF 10% 25V
C641	1-163-038-91	s	CERAMIC, CHIP 0.1uF 25V
C642	1-163-037-11	s	CERAMIC, CHIP 0.022uF 10% 25V
C643	1-163-243-11	s	CERAMIC, CHIP 47pF 5% 50V
C644	1-163-037-11	s	CERAMIC, CHIP 0.022uF 10% 25V
C645	1-126-393-11	s	ELECT, CHIP 33uF 20% 10V
C646	1-163-037-11	s	CERAMIC, CHIP 0.022uF 10% 25V
C647	1-163-037-11	s	CERAMIC, CHIP 0.022uF 10% 25V
C648	1-163-037-11	s	CERAMIC, CHIP 0.022uF 10% 25V
C649	1-163-037-11	s	CERAMIC, CHIP 0.022uF 10% 25V
C650	1-126-393-11	s	ELECT, CHIP 33uF 20% 10V
C651	1-163-037-11	s	CERAMIC, CHIP 0.022uF 10% 25V
C652	1-163-237-11	s	CERAMIC, CHIP 27pF 5% 50V
C653	1-163-237-11	s	CERAMIC, CHIP 27pF 5% 50V
C654	1-163-245-11	s	CERAMIC, CHIP 56pF 5% 50V
C655	1-163-245-11	s	CERAMIC, CHIP 56pF 5% 50V
C656	1-163-237-11	s	CERAMIC, CHIP 27pF 5% 50V
C657	1-163-237-11	s	CERAMIC, CHIP 27pF 5% 50V
C658	1-163-037-11	s	CERAMIC, CHIP 0.022uF 10% 25V
C659	1-163-037-11	s	CERAMIC, CHIP 0.022uF 10% 25V
C660	1-163-037-11	s	CERAMIC, CHIP 0.022uF 10% 25V
C661	1-163-037-11	s	CERAMIC, CHIP 0.022uF 10% 25V
C663	1-163-133-00	s	CERAMIC, CHIP 470pF 5% 50V
CT601	1-141-345-11	s	CAP, TRIMMER, CHIP 40pF
CT602	1-141-345-11	s	CAP, TRIMMER, CHIP 40pF
D1	8-719-941-04	s	DIODE SB007-03CP
D2	8-719-941-04	s	DIODE SB007-03CP
D3	8-719-053-18	s	DIODE 1SR154-400TE-25
D4	8-719-053-18	s	DIODE 1SR154-400TE-25
D5	8-719-053-18	s	DIODE 1SR154-400TE-25
D101	8-719-041-39	s	DIODE KV1470
D102	8-719-041-39	s	DIODE KV1470
D103	8-719-041-39	s	DIODE KV1470
D104	8-719-941-23	s	DIODE DA204U
D105	8-719-941-23	s	DIODE DA204U
D106	8-719-989-08	s	DIODE RB717F
D301	8-719-976-99	s	DIODE DTZ5.1B
D302	8-719-941-23	s	DIODE DA204U
D501	8-719-941-23	s	DIODE DA204U
D601	8-719-002-81	s	DIODE 1T363A-M20-T8A
D602	8-719-002-81	s	DIODE 1T363A-M20-T8A
E101	1-535-877-22	o	CHECKER, CHIP
E102	1-535-877-22	o	CHECKER, CHIP
E103	1-535-877-22	o	CHECKER, CHIP
E301	1-535-877-22	o	CHECKER, CHIP
E501	1-535-877-22	o	CHECKER, CHIP
E601	1-535-877-22	o	CHECKER, CHIP
F1	⚠ 1-576-124-11	s	LINK, IC, CHIP 1A
F2	⚠ 1-533-282-21	s	LINK, IC, CHIP 2A
F3	⚠ 1-576-124-11	s	LINK, IC, CHIP 1A
F4	⚠ 1-533-282-21	s	LINK, IC, CHIP 2A
F5	⚠ 1-576-124-11	s	LINK, IC, CHIP 1A
F6	⚠ 1-533-282-21	s	LINK, IC, CHIP 2A
FL101	1-233-598-11	s	FILTER, LOW-PASS
FL102	1-233-598-11	s	FILTER, LOW-PASS

(IO-149 BOARD(For NTSC); Suffix -12)

Ref. No. or Q'ty	Part No.	SP	Description
FL103	1-233-614-11	s	FILTER, LOW-PASS
FL104	1-239-771-11	s	FILTER, LOW-PASS
FL1001	1-239-719-11	s	FILTER, NOISE, CHIP
FL1002	1-239-719-11	s	FILTER, NOISE, CHIP
FL1003	1-239-719-11	s	FILTER, NOISE, CHIP
IC1	8-759-157-17	s	IC PQ05SZ1U
IC2	8-759-157-17	s	IC PQ05SZ1U
IC3	8-759-172-41	s	IC L78M09T-TL
IC4	8-759-172-41	s	IC L78M09T-TL
IC5	8-759-822-95	s	IC L79M05T-FA
IC6	8-759-822-95	s	IC L79M05T-FA
IC7	8-759-822-95	s	IC L79M05T-FA
IC8	8-759-157-17	s	IC PQ05SZ1U
IC101	8-759-198-63	s	IC S-81230SG-QB-T1
IC102	8-759-278-58	s	IC NJM4558V-TE2
IC103	8-759-278-58	s	IC NJM4558V-TE2
IC105	8-759-278-58	s	IC NJM4558V-TE2
IC106	8-759-082-61	s	IC TC4W53FU
IC107	8-759-076-06	s	IC TL064CPW
IC108	8-759-076-06	s	IC TL064CPW
IC109	8-752-052-77	s	IC CXA1450M
IC110	8-752-363-60	s	IC CXD2307R-T6
IC111	8-759-287-54	s	IC TL084CPW-E20
IC112	8-759-287-54	s	IC TL084CPW-E20
IC113	8-759-287-54	s	IC TL084CPW-E20
IC114	8-759-066-59	s	IC TC74HC4053AFS
IC115	8-752-054-80	s	IC CXA1521M
IC116	8-752-054-80	s	IC CXA1521M
IC117	8-759-906-59	s	IC CX22017
IC118	8-759-907-81	s	IC SN74LS221NS
IC301	8-759-082-59	s	IC TC7W32FU
IC302	8-759-082-61	s	IC TC4W53FU
IC304	8-759-287-54	s	IC TL084CPW-E20
IC305	8-759-082-61	s	IC TC4W53FU
IC306	8-752-052-73	s	IC CXA1451M
IC307	8-752-052-73	s	IC CXA1451M
IC308	8-759-262-00	s	IC MC14576CF
IC309	8-752-052-73	s	IC CXA1451M
IC310	8-752-052-73	s	IC CXA1451M
IC311	8-752-052-73	s	IC CXA1451M
IC312	8-759-082-61	s	IC TC4W53FU
IC501	8-759-082-57	s	IC TC7W04FU
IC502	8-752-052-77	s	IC CXA1450M
IC503	8-752-052-77	s	IC CXA1450M
IC504	8-759-173-16	s	IC TL062CPW
IC505	8-759-076-06	s	IC TL064CPW
IC506	8-759-430-88	s	IC TC74HC4051AFS(EL)
IC507	8-759-324-03	s	IC HA17431UA-TL
IC508	8-759-076-06	s	IC TL064CPW
IC509	8-752-052-77	s	IC CXA1450M
IC510	8-759-262-03	s	IC MC14577CF
IC512	8-759-987-27	s	IC LM1881MX
IC513	8-759-079-66	s	IC TC74VHC123AFS(EL)
IC514	8-759-980-04	s	IC LM311PS
IC515	8-759-702-08	s	IC NJM360M
IC516	8-752-052-77	s	IC CXA1450M
IC601	8-759-082-57	s	IC TC7W04FU
IC602	8-759-250-81	s	IC TC5081AP
IC603	8-759-079-67	s	IC TC74VHC125FS(EL)

(IO-149 BOARD(For NTSC); Suffix -12)

Ref. No. or Q'ty	Part No.	SP	Description
IC604	8-759-058-57	s	IC TC7S04FU-TE85L
IC605	8-759-357-24	s	IC MC68HC705C8AFU
IC606	8-752-335-47	s	IC CXD1216M
IC607	8-759-066-59	s	IC TC74HC4053AFS
IC608	8-759-241-03	s	IC TC74HC191AF
IC609	8-759-082-57	s	IC TC7W04FU
IC610	8-759-271-86	s	IC TC7SH04FU
IC611	8-759-271-86	s	IC TC7SH04FU
IC612	8-759-079-66	s	IC TC74VHC123AFS(EL)
IC613	8-759-079-80	s	IC TC74VHC175FS(EL)
IC614	8-759-519-49	s	IC CXD8165Q
IC615	8-752-339-46	s	IC CXD1177Q
IC616	8-759-082-57	s	IC TC7W04FU
IC617	8-759-066-59	s	IC TC74HC4053AFS
IC618	8-759-271-86	s	IC TC7SH04FU
IC619	8-759-271-86	s	IC TC7SH04FU
L101	1-414-402-11	s	INDUCTOR, CHIP 47uH
L102	1-414-400-11	s	INDUCTOR, CHIP 22uH
L103	1-414-400-11	s	INDUCTOR, CHIP 22uH
L104	1-414-402-11	s	INDUCTOR, CHIP 47uH
L105	1-414-402-11	s	INDUCTOR, CHIP 47uH
L106	1-414-400-11	s	INDUCTOR, CHIP 22uH
L107	1-414-400-11	s	INDUCTOR, CHIP 22uH
L108	1-414-402-11	s	INDUCTOR, CHIP 47uH
L109	1-414-402-11	s	INDUCTOR, CHIP 47uH
L110	1-414-402-11	s	INDUCTOR, CHIP 47uH
L111	1-414-402-11	s	INDUCTOR, CHIP 47uH
L112	1-414-404-11	s	INDUCTOR, CHIP 100uH
L113	1-414-402-11	s	INDUCTOR, CHIP 47uH
L114	1-414-404-11	s	INDUCTOR, CHIP 100uH
L115	1-410-385-11	s	INDUCTOR, CHIP 22uH
L117	1-410-393-11	s	INDUCTOR, CHIP 100uH
L301	1-414-402-11	s	INDUCTOR, CHIP 47uH
L302	1-414-402-11	s	INDUCTOR, CHIP 47uH
L303	1-414-402-11	s	INDUCTOR, CHIP 47uH
L304	1-414-402-11	s	INDUCTOR, CHIP 47uH
L305	1-410-391-11	s	INDUCTOR, CHIP 68uH
L306	1-410-391-11	s	INDUCTOR, CHIP 68uH
L307	1-414-402-11	s	INDUCTOR, CHIP 47uH
L308	1-414-402-11	s	INDUCTOR, CHIP 47uH
L309	1-414-402-11	s	INDUCTOR, CHIP 47uH
L310	1-410-387-11	s	INDUCTOR, CHIP 33uH
L311	1-410-387-11	s	INDUCTOR, CHIP 33uH
L312	1-414-402-11	s	INDUCTOR, CHIP 47uH
L313	1-414-402-11	s	INDUCTOR, CHIP 47uH
L314	1-410-389-31	s	INDUCTOR, CHIP 47uH
L315	1-410-387-11	s	INDUCTOR, CHIP 33uH
L501	1-410-390-11	s	INDUCTOR, CHIP 56uH
L502	1-410-393-11	s	INDUCTOR, CHIP 100uH
L503	1-414-402-11	s	INDUCTOR, CHIP 47uH
L504	1-414-402-11	s	INDUCTOR, CHIP 47uH
L505	1-410-391-11	s	INDUCTOR, CHIP 68uH
L506	1-414-402-11	s	INDUCTOR, CHIP 47uH
L507	1-414-402-11	s	INDUCTOR, CHIP 47uH
L601	1-414-402-11	s	INDUCTOR, CHIP 47uH
L602	1-414-402-11	s	INDUCTOR, CHIP 47uH
L603	1-414-400-11	s	INDUCTOR, CHIP 22uH
L604	1-414-400-11	s	INDUCTOR, CHIP 22uH

(IO-149 BOARD(For NTSC); Suffix -12)

Ref. No. or Q'ty	Part No.	SP	Description
L605	1-410-389-31	s	INDUCTOR, CHIP 47uH
L606	1-410-389-31	s	INDUCTOR, CHIP 47uH
L607	1-410-389-31	s	INDUCTOR, CHIP 47uH
L608	1-410-389-31	s	INDUCTOR, CHIP 47uH
Q101	8-729-117-32	s	TRANSISTOR 2SC4177
Q102	8-729-117-32	s	TRANSISTOR 2SC4177
Q103	8-729-117-32	s	TRANSISTOR 2SC4177
Q104	8-729-140-63	s	TRANSISTOR 2SA1611-M5M6
Q105	8-729-117-32	s	TRANSISTOR 2SC4177
Q106	8-729-117-32	s	TRANSISTOR 2SC4177
Q107	8-729-117-32	s	TRANSISTOR 2SC4177
Q108	8-729-923-06	s	TRANSISTOR FMW-8
Q109	8-729-923-06	s	TRANSISTOR FMW-8
Q110	8-729-923-06	s	TRANSISTOR FMW-8
Q111	8-729-904-04	s	TRANSISTOR FMS2
Q112	8-729-904-04	s	TRANSISTOR FMS2
Q113	8-729-904-04	s	TRANSISTOR FMS2
Q114	8-729-903-82	s	TRANSISTOR FMW2
Q115	8-729-903-82	s	TRANSISTOR FMW2
Q116	8-729-903-82	s	TRANSISTOR FMW2
Q117	8-729-931-46	s	TRANSISTOR FMW7
Q118	8-729-931-46	s	TRANSISTOR FMW7
Q119	8-729-931-46	s	TRANSISTOR FMW7
Q120	8-729-907-26	s	TRANSISTOR IMX1
Q121	8-729-907-26	s	TRANSISTOR IMX1
Q122	8-729-907-26	s	TRANSISTOR IMX1
Q123	8-729-143-14	s	TRANSISTOR 2SC4176-B35
Q124	8-729-117-32	s	TRANSISTOR 2SC4177
Q125	8-729-140-63	s	TRANSISTOR 2SA1611-M5M6
Q126	8-729-117-32	s	TRANSISTOR 2SC4177
Q127	8-729-143-14	s	TRANSISTOR 2SC4176-B35
Q128	8-729-140-63	s	TRANSISTOR 2SA1611-M5M6
Q129	8-729-903-82	s	TRANSISTOR FMW2
Q130	8-729-117-32	s	TRANSISTOR 2SC4177
Q131	8-729-903-82	s	TRANSISTOR FMW2
Q301	8-729-143-14	s	TRANSISTOR 2SC4176-B35
Q302	8-729-904-41	s	TRANSISTOR FMY3
Q303	8-729-140-63	s	TRANSISTOR 2SA1611-M5M6
Q304	8-729-140-63	s	TRANSISTOR 2SA1611-M5M6
Q305	8-729-117-32	s	TRANSISTOR 2SC4177
Q306	8-729-117-32	s	TRANSISTOR 2SC4177
Q307	8-729-907-26	s	TRANSISTOR IMX1
Q308	8-729-117-32	s	TRANSISTOR 2SC4177
Q309	8-729-117-32	s	TRANSISTOR 2SC4177
Q310	8-729-143-14	s	TRANSISTOR 2SC4176-B35
Q311	8-729-117-32	s	TRANSISTOR 2SC4177
Q312	8-729-907-26	s	TRANSISTOR IMX1
Q313	8-729-140-63	s	TRANSISTOR 2SA1611-M5M6
Q314	8-729-140-63	s	TRANSISTOR 2SA1611-M5M6
Q315	8-729-117-32	s	TRANSISTOR 2SC4177
Q316	8-729-140-63	s	TRANSISTOR 2SA1611-M5M6
Q317	8-729-117-32	s	TRANSISTOR 2SC4177
Q318	8-729-904-41	s	TRANSISTOR FMY3
Q319	8-729-904-41	s	TRANSISTOR FMY3
Q320	8-729-117-32	s	TRANSISTOR 2SC4177
Q321	8-729-117-32	s	TRANSISTOR 2SC4177
Q322	8-729-117-32	s	TRANSISTOR 2SC4177
Q323	8-729-143-14	s	TRANSISTOR 2SC4176-B35
Q324	8-729-140-63	s	TRANSISTOR 2SA1611-M5M6

(IO-149 BOARD(For NTSC); Suffix -12)

Ref. No. or Q'ty	Part No.	SP	Description
Q325	8-729-140-63	s	TRANSISTOR 2SA1611-M5M6
Q326	8-729-117-32	s	TRANSISTOR 2SC4177
Q327	8-729-117-32	s	TRANSISTOR 2SC4177
Q328	8-729-117-32	s	TRANSISTOR 2SC4177
Q329	8-729-117-32	s	TRANSISTOR 2SC4177
Q330	8-729-117-32	s	TRANSISTOR 2SC4177
Q331	8-729-904-41	s	TRANSISTOR FMY3
Q332	8-729-422-44	s	TRANSISTOR 2SK663
Q333	8-729-422-44	s	TRANSISTOR 2SK663
Q334	8-729-422-44	s	TRANSISTOR 2SK663
Q335	8-729-422-44	s	TRANSISTOR 2SK663
Q336	8-729-140-63	s	TRANSISTOR 2SA1611-M5M6
Q337	8-729-140-63	s	TRANSISTOR 2SA1611-M5M6
Q338	8-729-140-63	s	TRANSISTOR 2SA1611-M5M6
Q339	8-729-140-63	s	TRANSISTOR 2SA1611-M5M6
Q340	8-729-117-32	s	TRANSISTOR 2SC4177
Q341	8-729-907-26	s	TRANSISTOR IMX1
Q342	8-729-907-26	s	TRANSISTOR IMX1
Q343	8-729-117-32	s	TRANSISTOR 2SC4177
Q344	8-729-117-32	s	TRANSISTOR 2SC4177
Q345	8-729-907-26	s	TRANSISTOR IMX1
Q346	8-729-117-32	s	TRANSISTOR 2SC4177
Q347	8-729-907-26	s	TRANSISTOR IMX1
Q348	8-729-117-32	s	TRANSISTOR 2SC4177
Q349	8-729-140-63	s	TRANSISTOR 2SA1611-M5M6
Q350	8-729-140-63	s	TRANSISTOR 2SA1611-M5M6
Q501	8-729-117-32	s	TRANSISTOR 2SC4177
Q502	8-729-117-32	s	TRANSISTOR 2SC4177
Q503	8-729-117-32	s	TRANSISTOR 2SC4177
Q504	8-729-117-32	s	TRANSISTOR 2SC4177
Q505	8-729-117-32	s	TRANSISTOR 2SC4177
Q506	8-729-904-41	s	TRANSISTOR FMY3
Q507	8-729-117-32	s	TRANSISTOR 2SC4177
Q508	8-729-117-32	s	TRANSISTOR 2SC4177
Q509	8-729-117-32	s	TRANSISTOR 2SC4177
Q601	8-729-140-47	s	TRANSISTOR 2SC3735-B34
Q602	8-729-140-47	s	TRANSISTOR 2SC3735-B34
Q603	8-729-140-47	s	TRANSISTOR 2SC3735-B34
Q604	8-729-140-47	s	TRANSISTOR 2SC3735-B34
Q605	8-729-117-32	s	TRANSISTOR 2SC4177
Q606	8-729-117-32	s	TRANSISTOR 2SC4177
Q607	8-729-117-32	s	TRANSISTOR 2SC4177
Q608	8-729-117-32	s	TRANSISTOR 2SC4177
R101	1-216-672-11	s	METAL, CHIP 7.5k 0.5% 1/10W
R102	1-216-665-11	s	METAL, CHIP 3.9k 0.5% 1/10W
R103	1-216-667-11	s	METAL, CHIP 4.7k 0.5% 1/10W
R104	1-216-675-11	s	METAL, CHIP 10k 0.5% 1/10W
R105	1-216-041-00	s	METAL, CHIP 470 5% 1/10W
R106	1-216-295-91	s	RES, CHIP 0
R107	1-216-652-11	s	METAL, CHIP 1.1k 0.5% 1/10W
R108	1-216-668-11	s	METAL, CHIP 5.1k 0.5% 1/10W
R110	1-216-295-91	s	RES, CHIP 0
R112	1-216-295-91	s	RES, CHIP 0
R113	1-216-668-11	s	METAL, CHIP 5.1k 0.5% 1/10W
R114	1-216-665-11	s	METAL, CHIP 3.9k 0.5% 1/10W
R115	1-216-663-11	s	METAL, CHIP 3.3k 0.5% 1/10W
R116	1-216-073-00	s	METAL, CHIP 10k 5% 1/10W
R117	1-216-655-11	s	METAL, CHIP 1.5k 0.5% 1/10W

(IO-149 BOARD(For NTSC); Suffix -12)

Ref. No. or Q'ty	Part No.	SP	Description
R118	1-216-657-11	s	METAL, CHIP 1.8k 0.5% 1/10W
R119	1-216-675-11	s	METAL, CHIP 10k 0.5% 1/10W
R120	1-216-675-11	s	METAL, CHIP 10k 0.5% 1/10W
R121	1-216-073-00	s	METAL, CHIP 10k 5% 1/10W
R122	1-216-073-00	s	METAL, CHIP 10k 5% 1/10W
R123	1-216-085-00	s	METAL, CHIP 33k 5% 1/10W
R124	1-216-085-00	s	METAL, CHIP 33k 5% 1/10W
R125	1-216-121-91	s	METAL, CHIP 1M 5% 1/10W
R126	1-216-121-91	s	METAL, CHIP 1M 5% 1/10W
R127	1-216-085-00	s	METAL, CHIP 33k 5% 1/10W
R128	1-216-085-00	s	METAL, CHIP 33k 5% 1/10W
R129	1-216-121-91	s	METAL, CHIP 1M 5% 1/10W
R130	1-216-121-91	s	METAL, CHIP 1M 5% 1/10W
R131	1-216-033-00	s	METAL, CHIP 220 5% 1/10W
R132	1-216-033-00	s	METAL, CHIP 220 5% 1/10W
R133	1-216-053-00	s	METAL, CHIP 1.5k 5% 1/10W
R134	1-216-053-00	s	METAL, CHIP 1.5k 5% 1/10W
R135	1-216-675-11	s	METAL, CHIP 10k 0.5% 1/10W
R136	1-216-073-00	s	METAL, CHIP 10k 5% 1/10W
R137	1-216-081-00	s	METAL, CHIP 22k 5% 1/10W
R138	1-216-121-91	s	METAL, CHIP 1M 5% 1/10W
R139	1-216-085-00	s	METAL, CHIP 33k 5% 1/10W
R140	1-216-121-91	s	METAL, CHIP 1M 5% 1/10W
R141	1-216-033-00	s	METAL, CHIP 220 5% 1/10W
R142	1-216-065-00	s	METAL, CHIP 4.7k 5% 1/10W
R143	1-216-065-00	s	METAL, CHIP 4.7k 5% 1/10W
R144	1-216-677-11	s	METAL, CHIP 12k 0.5% 1/10W
R145	1-216-678-11	s	METAL, CHIP 13k 0.5% 1/10W
R146	1-216-678-11	s	METAL, CHIP 13k 0.5% 1/10W
R147	1-216-667-11	s	METAL, CHIP 4.7k 0.5% 1/10W
R148	1-216-678-11	s	METAL, CHIP 13k 0.5% 1/10W
R149	1-216-659-11	s	METAL, CHIP 2.2k 0.5% 1/10W
R150	1-216-673-11	s	METAL, CHIP 8.2k 0.5% 1/10W
R151	1-216-659-11	s	METAL, CHIP 2.2k 0.5% 1/10W
R152	1-216-661-11	s	METAL, CHIP 2.7k 0.5% 1/10W
R153	1-216-661-11	s	METAL, CHIP 2.7k 0.5% 1/10W
R154	1-216-085-00	s	METAL, CHIP 33k 5% 1/10W
R155	1-216-675-11	s	METAL, CHIP 10k 0.5% 1/10W
R156	1-216-675-11	s	METAL, CHIP 10k 0.5% 1/10W
R157	1-216-679-11	s	METAL, CHIP 15k 0.5% 1/10W
R158	1-216-679-11	s	METAL, CHIP 15k 0.5% 1/10W
R159	1-216-659-11	s	METAL, CHIP 2.2k 0.5% 1/10W
R160	1-216-679-11	s	METAL, CHIP 15k 0.5% 1/10W
R161	1-216-679-11	s	METAL, CHIP 15k 0.5% 1/10W
R162	1-216-661-11	s	METAL, CHIP 2.7k 0.5% 1/10W
R163	1-216-679-11	s	METAL, CHIP 15k 0.5% 1/10W
R164	1-216-671-11	s	METAL, CHIP 6.8k 0.5% 1/10W
R165	1-216-671-11	s	METAL, CHIP 6.8k 0.5% 1/10W
R166	1-216-679-11	s	METAL, CHIP 15k 0.5% 1/10W
R167	1-216-663-11	s	METAL, CHIP 3.3k 0.5% 1/10W
R168	1-216-659-11	s	METAL, CHIP 2.2k 0.5% 1/10W
R169	1-216-081-00	s	METAL, CHIP 22k 5% 1/10W
R170	1-216-081-00	s	METAL, CHIP 22k 5% 1/10W
R171	1-216-081-00	s	METAL, CHIP 22k 5% 1/10W
R172	1-216-645-11	s	METAL, CHIP 560 0.5% 1/10W
R173	1-216-665-11	s	METAL, CHIP 3.9k 0.5% 1/10W
R174	1-216-665-11	s	METAL, CHIP 3.9k 0.5% 1/10W
R175	1-216-089-91	s	METAL, CHIP 47k 5% 1/10W
R176	1-216-667-11	s	METAL, CHIP 4.7k 0.5% 1/10W

(IO-149 BOARD(For NTSC); Suffix -12)

Ref. No. or Q'ty	Part No.	SP	Description
R177	1-216-089-91	s	METAL, CHIP 47k 5% 1/10W
R178	1-216-089-91	s	METAL, CHIP 47k 5% 1/10W
R179	1-216-639-11	s	METAL, CHIP 330 0.5% 1/10W
R180	1-216-639-11	s	METAL, CHIP 330 0.5% 1/10W
R181	1-216-639-11	s	METAL, CHIP 330 0.5% 1/10W
R182	1-216-639-11	s	METAL, CHIP 330 0.5% 1/10W
R183	1-216-639-11	s	METAL, CHIP 330 0.5% 1/10W
R184	1-216-639-11	s	METAL, CHIP 330 0.5% 1/10W
R185	1-216-045-00	s	METAL, CHIP 680 5% 1/10W
R186	1-216-045-00	s	METAL, CHIP 680 5% 1/10W
R187	1-216-017-91	s	METAL, CHIP 47 5% 1/10W
R188	1-216-017-91	s	METAL, CHIP 47 5% 1/10W
R189	1-216-045-00	s	METAL, CHIP 680 5% 1/10W
R190	1-216-017-91	s	METAL, CHIP 47 5% 1/10W
R191	1-216-017-91	s	METAL, CHIP 47 5% 1/10W
R192	1-216-017-91	s	METAL, CHIP 47 5% 1/10W
R193	1-216-017-91	s	METAL, CHIP 47 5% 1/10W
R194	1-216-057-00	s	METAL, CHIP 2.2k 5% 1/10W
R195	1-216-057-00	s	METAL, CHIP 2.2k 5% 1/10W
R196	1-216-057-00	s	METAL, CHIP 2.2k 5% 1/10W
R197	1-216-049-91	s	METAL, CHIP 1k 5% 1/10W
R198	1-216-049-91	s	METAL, CHIP 1k 5% 1/10W
R199	1-216-049-91	s	METAL, CHIP 1k 5% 1/10W
R200	1-216-049-91	s	METAL, CHIP 1k 5% 1/10W
R201	1-216-049-91	s	METAL, CHIP 1k 5% 1/10W
R202	1-216-049-91	s	METAL, CHIP 1k 5% 1/10W
R203	1-216-057-00	s	METAL, CHIP 2.2k 5% 1/10W
R204	1-216-057-00	s	METAL, CHIP 2.2k 5% 1/10W
R205	1-216-057-00	s	METAL, CHIP 2.2k 5% 1/10W
R206	1-216-033-00	s	METAL, CHIP 220 5% 1/10W
R207	1-216-033-00	s	METAL, CHIP 220 5% 1/10W
R208	1-216-033-00	s	METAL, CHIP 220 5% 1/10W
R209	1-216-045-00	s	METAL, CHIP 680 5% 1/10W
R210	1-216-045-00	s	METAL, CHIP 680 5% 1/10W
R211	1-216-045-00	s	METAL, CHIP 680 5% 1/10W
R212	1-216-077-00	s	METAL, CHIP 15k 5% 1/10W
R213	1-216-077-00	s	METAL, CHIP 15k 5% 1/10W
R214	1-216-077-00	s	METAL, CHIP 15k 5% 1/10W
R215	1-216-027-00	s	METAL, CHIP 120 5% 1/10W
R216	1-216-027-00	s	METAL, CHIP 120 5% 1/10W
R217	1-216-027-00	s	METAL, CHIP 120 5% 1/10W
R218	1-216-045-00	s	METAL, CHIP 680 5% 1/10W
R219	1-216-045-00	s	METAL, CHIP 680 5% 1/10W
R220	1-216-295-91	s	RES, CHIP 0
R221	1-216-017-91	s	METAL, CHIP 47 5% 1/10W
R222	1-216-017-91	s	METAL, CHIP 47 5% 1/10W
R223	1-216-017-91	s	METAL, CHIP 47 5% 1/10W
R224	1-216-651-11	s	METAL, CHIP 1k 0.5% 1/10W
R225	1-216-659-11	s	METAL, CHIP 2.2k 0.5% 1/10W
R226	1-216-651-11	s	METAL, CHIP 1k 0.5% 1/10W
R227	1-216-659-11	s	METAL, CHIP 2.2k 0.5% 1/10W
R228	1-216-049-91	s	METAL, CHIP 1k 5% 1/10W
R229	1-216-659-11	s	METAL, CHIP 2.2k 0.5% 1/10W
R230	1-216-651-11	s	METAL, CHIP 1k 0.5% 1/10W
R231	1-216-121-91	s	METAL, CHIP 1M 5% 1/10W
R232	1-216-049-91	s	METAL, CHIP 1k 5% 1/10W
R233	1-216-049-91	s	METAL, CHIP 1k 5% 1/10W
R234	1-216-121-91	s	METAL, CHIP 1M 5% 1/10W
R235	1-216-121-91	s	METAL, CHIP 1M 5% 1/10W

(IO-149 BOARD(For NTSC); Suffix -12)

Ref. No. or Q'ty	Part No.	SP	Description
R236	1-216-049-91	s	METAL, CHIP 1k 5% 1/10W
R237	1-216-049-91	s	METAL, CHIP 1k 5% 1/10W
R238	1-216-049-91	s	METAL, CHIP 1k 5% 1/10W
R239	1-216-049-91	s	METAL, CHIP 1k 5% 1/10W
R240	1-216-049-91	s	METAL, CHIP 1k 5% 1/10W
R241	1-216-089-91	s	METAL, CHIP 47k 5% 1/10W
R242	1-216-049-91	s	METAL, CHIP 1k 5% 1/10W
R243	1-216-089-91	s	METAL, CHIP 47k 5% 1/10W
R244	1-216-073-00	s	METAL, CHIP 10k 5% 1/10W
R245	1-216-649-11	s	METAL, CHIP 820 0.5% 1/10W
R246	1-216-057-00	s	METAL, CHIP 2.2k 5% 1/10W
R247	1-216-651-11	s	METAL, CHIP 1k 0.5% 1/10W
R248	1-216-057-00	s	METAL, CHIP 2.2k 5% 1/10W
R249	1-216-643-11	s	METAL, CHIP 470 0.5% 1/10W
R250	1-216-639-11	s	METAL, CHIP 330 0.5% 1/10W
R251	1-216-643-11	s	METAL, CHIP 470 0.5% 1/10W
R252	1-216-677-11	s	METAL, CHIP 12k 0.5% 1/10W
R253	1-216-683-11	s	METAL, CHIP 22k 0.5% 1/10W
R254	1-216-681-11	s	METAL, CHIP 18k 0.5% 1/10W
R255	1-216-683-11	s	METAL, CHIP 22k 0.5% 1/10W
R256	1-216-097-91	s	METAL, CHIP 100k 5% 1/10W
R257	1-216-089-91	s	METAL, CHIP 47k 5% 1/10W
R258	1-216-295-91	s	RES, CHIP 0
R259	1-216-668-11	s	METAL, CHIP 5.1k 0.5% 1/10W
R260	1-216-073-00	s	METAL, CHIP 10k 5% 1/10W
R261	1-216-049-91	s	METAL, CHIP 1k 5% 1/10W
R262	1-216-687-11	s	METAL, CHIP 33k 0.5% 1/10W
R263	1-216-065-00	s	METAL, CHIP 4.7k 5% 1/10W
R264	1-216-065-00	s	METAL, CHIP 4.7k 5% 1/10W
R265	1-216-049-91	s	METAL, CHIP 1k 5% 1/10W
R266	1-216-049-91	s	METAL, CHIP 1k 5% 1/10W
R267	1-216-049-91	s	METAL, CHIP 1k 5% 1/10W
R268	1-216-049-91	s	METAL, CHIP 1k 5% 1/10W
R269	1-216-057-00	s	METAL, CHIP 2.2k 5% 1/10W
R270	1-216-647-11	s	METAL, CHIP 680 0.5% 1/10W
R271	1-216-081-00	s	METAL, CHIP 22k 5% 1/10W
R272	1-216-666-11	s	METAL, CHIP 4.3k 0.5% 1/10W
R274	1-216-661-11	s	METAL, CHIP 2.7k 0.5% 1/10W
R275	1-216-057-00	s	METAL, CHIP 2.2k 5% 1/10W
R276	1-216-049-91	s	METAL, CHIP 1k 5% 1/10W
R277	1-216-081-00	s	METAL, CHIP 22k 5% 1/10W
R278	1-216-025-91	s	METAL, CHIP 100 5% 1/10W
R279	1-216-017-91	s	METAL, CHIP 47 5% 1/10W
R280	1-216-657-11	s	METAL, CHIP 1.8k 0.5% 1/10W
R281	1-216-073-00	s	METAL, CHIP 10k 5% 1/10W
R282	1-216-097-91	s	METAL, CHIP 100k 5% 1/10W
R301	1-216-065-00	s	METAL, CHIP 4.7k 5% 1/10W
R302	1-216-025-91	s	METAL, CHIP 100 5% 1/10W
R303	1-216-065-00	s	METAL, CHIP 4.7k 5% 1/10W
R304	1-216-049-91	s	METAL, CHIP 1k 5% 1/10W
R305	1-216-049-91	s	METAL, CHIP 1k 5% 1/10W
R306	1-216-033-00	s	METAL, CHIP 220 5% 1/10W
R307	1-216-057-00	s	METAL, CHIP 2.2k 5% 1/10W
R308	1-216-057-00	s	METAL, CHIP 2.2k 5% 1/10W
R309	1-216-049-91	s	METAL, CHIP 1k 5% 1/10W
R310	1-216-049-91	s	METAL, CHIP 1k 5% 1/10W
R311	1-216-659-11	s	METAL, CHIP 2.2k 0.5% 1/10W
R312	1-216-627-11	s	METAL, CHIP 100 0.5% 1/10W
R313	1-216-295-91	s	RES, CHIP 0

(IO-149 BOARD(For NTSC); Suffix -12)

Ref. No. or Q'ty	Part No.	SP	Description
R314	1-216-661-11	s	METAL, CHIP 2.7k 0.5% 1/10W
R315	1-216-065-00	s	METAL, CHIP 4.7k 5% 1/10W
R316	1-216-025-91	s	METAL, CHIP 100 5% 1/10W
R317	1-216-647-11	s	METAL, CHIP 680 0.5% 1/10W
R318	1-216-017-91	s	METAL, CHIP 47 5% 1/10W
R319	1-216-657-11	s	METAL, CHIP 1.8k 0.5% 1/10W
R320	1-216-065-00	s	METAL, CHIP 4.7k 5% 1/10W
R321	1-216-025-91	s	METAL, CHIP 100 5% 1/10W
R322	1-216-643-11	s	METAL, CHIP 470 0.5% 1/10W
R323	1-216-653-11	s	METAL, CHIP 1.2k 0.5% 1/10W
R324	1-216-643-11	s	METAL, CHIP 470 0.5% 1/10W
R325	1-216-643-11	s	METAL, CHIP 470 0.5% 1/10W
R326	1-216-647-11	s	METAL, CHIP 680 0.5% 1/10W
R327	1-216-065-00	s	METAL, CHIP 4.7k 5% 1/10W
R328	1-216-639-11	s	METAL, CHIP 330 0.5% 1/10W
R329	1-216-049-91	s	METAL, CHIP 1k 5% 1/10W
R330	1-216-033-00	s	METAL, CHIP 220 5% 1/10W
R331	1-216-049-91	s	METAL, CHIP 1k 5% 1/10W
R332	1-216-049-91	s	METAL, CHIP 1k 5% 1/10W
R333	1-216-049-91	s	METAL, CHIP 1k 5% 1/10W
R336	1-216-061-00	s	METAL, CHIP 3.3k 5% 1/10W
R337	1-216-683-11	s	METAL, CHIP 22k 0.5% 1/10W
R338	1-216-667-11	s	METAL, CHIP 4.7k 0.5% 1/10W
R339	1-216-049-91	s	METAL, CHIP 1k 5% 1/10W
R340	1-216-643-11	s	METAL, CHIP 470 0.5% 1/10W
R341	1-216-643-11	s	METAL, CHIP 470 0.5% 1/10W
R342	1-216-651-11	s	METAL, CHIP 1k 0.5% 1/10W
R343	1-216-053-00	s	METAL, CHIP 1.5k 5% 1/10W
R344	1-216-025-91	s	METAL, CHIP 100 5% 1/10W
R345	1-216-643-11	s	METAL, CHIP 470 0.5% 1/10W
R346	1-216-077-00	s	METAL, CHIP 15k 5% 1/10W
R347	1-216-057-00	s	METAL, CHIP 2.2k 5% 1/10W
R348	1-216-655-11	s	METAL, CHIP 1.5k 0.5% 1/10W
R349	1-216-025-91	s	METAL, CHIP 100 5% 1/10W
R350	1-216-643-11	s	METAL, CHIP 470 0.5% 1/10W
R351	1-216-057-00	s	METAL, CHIP 2.2k 5% 1/10W
R352	1-216-634-11	s	METAL, CHIP 200 0.5% 1/10W
R354	1-216-057-00	s	METAL, CHIP 2.2k 5% 1/10W
R357	1-216-655-11	s	METAL, CHIP 1.5k 0.5% 1/10W
R359	1-216-057-00	s	METAL, CHIP 2.2k 5% 1/10W
R361	1-216-651-11	s	METAL, CHIP 1k 0.5% 1/10W
R362	1-216-025-91	s	METAL, CHIP 100 5% 1/10W
R363	1-216-025-91	s	METAL, CHIP 100 5% 1/10W
R364	1-216-049-91	s	METAL, CHIP 1k 5% 1/10W
R365	1-216-025-91	s	METAL, CHIP 100 5% 1/10W
R366	1-216-651-11	s	METAL, CHIP 1k 0.5% 1/10W
R367	1-216-653-11	s	METAL, CHIP 1.2k 0.5% 1/10W
R368	1-216-049-91	s	METAL, CHIP 1k 5% 1/10W
R369	1-216-049-91	s	METAL, CHIP 1k 5% 1/10W
R370	1-216-651-11	s	METAL, CHIP 1k 0.5% 1/10W
R371	1-216-057-00	s	METAL, CHIP 2.2k 5% 1/10W
R372	1-216-049-91	s	METAL, CHIP 1k 5% 1/10W
R373	1-216-049-91	s	METAL, CHIP 1k 5% 1/10W
R374	1-216-653-11	s	METAL, CHIP 1.2k 0.5% 1/10W
R375	1-216-653-11	s	METAL, CHIP 1.2k 0.5% 1/10W
R376	1-216-049-91	s	METAL, CHIP 1k 5% 1/10W
R377	1-216-049-91	s	METAL, CHIP 1k 5% 1/10W
R378	1-216-065-00	s	METAL, CHIP 4.7k 5% 1/10W
R379	1-216-025-91	s	METAL, CHIP 100 5% 1/10W

(IO-149 BOARD(For NTSC); Suffix -12)

Ref. No. or Q'ty	Part No.	SP	Description
R380	1-216-065-00	s	METAL, CHIP 4.7k 5% 1/10W
R381	1-216-025-91	s	METAL, CHIP 100 5% 1/10W
R382	1-216-053-00	s	METAL, CHIP 1.5k 5% 1/10W
R383	1-216-049-91	s	METAL, CHIP 1k 5% 1/10W
R384	1-216-049-91	s	METAL, CHIP 1k 5% 1/10W
R385	1-216-049-91	s	METAL, CHIP 1k 5% 1/10W
R386	1-216-049-91	s	METAL, CHIP 1k 5% 1/10W
R387	1-216-049-91	s	METAL, CHIP 1k 5% 1/10W
R388	1-216-049-91	s	METAL, CHIP 1k 5% 1/10W
R389	1-216-639-11	s	METAL, CHIP 330 0.5% 1/10W
R390	1-216-639-11	s	METAL, CHIP 330 0.5% 1/10W
R391	1-216-057-00	s	METAL, CHIP 2.2k 5% 1/10W
R392	1-216-041-00	s	METAL, CHIP 470 5% 1/10W
R393	1-216-057-00	s	METAL, CHIP 2.2k 5% 1/10W
R394	1-216-025-91	s	METAL, CHIP 100 5% 1/10W
R395	1-216-025-91	s	METAL, CHIP 100 5% 1/10W
R396	1-216-025-91	s	METAL, CHIP 100 5% 1/10W
R397	1-216-025-91	s	METAL, CHIP 100 5% 1/10W
R398	1-216-055-00	s	METAL, CHIP 1.8k 5% 1/10W
R399	1-216-065-00	s	METAL, CHIP 4.7k 5% 1/10W
R400	1-216-065-00	s	METAL, CHIP 4.7k 5% 1/10W
R401	1-216-065-00	s	METAL, CHIP 4.7k 5% 1/10W
R402	1-216-065-00	s	METAL, CHIP 4.7k 5% 1/10W
R403	1-216-669-11	s	METAL, CHIP 5.6k 0.5% 1/10W
R404	1-216-659-11	s	METAL, CHIP 2.2k 0.5% 1/10W
R405	1-216-113-00	s	METAL, CHIP 470k 5% 1/10W
R406	1-216-049-91	s	METAL, CHIP 1k 5% 1/10W
R407	1-216-049-91	s	METAL, CHIP 1k 5% 1/10W
R408	1-216-049-91	s	METAL, CHIP 1k 5% 1/10W
R409	1-216-057-00	s	METAL, CHIP 2.2k 5% 1/10W
R410	1-216-669-11	s	METAL, CHIP 5.6k 0.5% 1/10W
R411	1-216-659-11	s	METAL, CHIP 2.2k 0.5% 1/10W
R412	1-216-055-00	s	METAL, CHIP 1.8k 5% 1/10W
R413	1-216-057-00	s	METAL, CHIP 2.2k 5% 1/10W
R414	1-216-017-91	s	METAL, CHIP 47 5% 1/10W
R415	1-216-017-91	s	METAL, CHIP 47 5% 1/10W
R416	1-216-073-00	s	METAL, CHIP 10k 5% 1/10W
R417	1-216-643-11	s	METAL, CHIP 470 0.5% 1/10W
R418	1-216-643-11	s	METAL, CHIP 470 0.5% 1/10W
R419	1-216-653-11	s	METAL, CHIP 1.2k 0.5% 1/10W
R420	1-216-643-11	s	METAL, CHIP 470 0.5% 1/10W
R421	1-216-041-00	s	METAL, CHIP 470 5% 1/10W
R422	1-216-653-11	s	METAL, CHIP 1.2k 0.5% 1/10W
R423	1-216-643-11	s	METAL, CHIP 470 0.5% 1/10W
R424	1-216-643-11	s	METAL, CHIP 470 0.5% 1/10W
R425	1-216-663-11	s	METAL, CHIP 3.3k 0.5% 1/10W
R426	1-216-663-11	s	METAL, CHIP 3.3k 0.5% 1/10W
R427	1-216-053-00	s	METAL, CHIP 1.5k 5% 1/10W
R428	1-216-651-11	s	METAL, CHIP 1k 0.5% 1/10W
R429	1-216-639-11	s	METAL, CHIP 330 0.5% 1/10W
R430	1-216-651-11	s	METAL, CHIP 1k 0.5% 1/10W
R431	1-216-639-11	s	METAL, CHIP 330 0.5% 1/10W
R432	1-216-065-00	s	METAL, CHIP 4.7k 5% 1/10W
R433	1-216-065-00	s	METAL, CHIP 4.7k 5% 1/10W
R434	1-216-651-11	s	METAL, CHIP 1k 0.5% 1/10W
R435	1-216-660-11	s	METAL, CHIP 2.4k 0.5% 1/10W
R436	1-216-049-91	s	METAL, CHIP 1k 5% 1/10W
R437	1-216-081-00	s	METAL, CHIP 22k 5% 1/10W
R438	1-216-653-11	s	METAL, CHIP 1.2k 0.5% 1/10W

(IO-149 BOARD(For NTSC); Suffix -12)

Ref. No. or Q'ty	Part No.	SP	Description
R439	1-216-667-11	s	METAL, CHIP 4.7k 0.5% 1/10W
R440	1-216-651-11	s	METAL, CHIP 1k 0.5% 1/10W
R441	1-216-624-11	s	METAL, CHIP 75 0.5% 1/10W
R442	1-216-624-11	s	METAL, CHIP 75 0.5% 1/10W
R443	1-216-624-11	s	METAL, CHIP 75 0.5% 1/10W
R444	1-216-646-11	s	METAL, CHIP 620 0.5% 1/10W
R445	1-216-045-00	s	METAL, CHIP 680 5% 1/10W
R446	1-216-041-00	s	METAL, CHIP 470 5% 1/10W
R447	1-216-651-11	s	METAL, CHIP 1k 0.5% 1/10W
R448	1-216-041-00	s	METAL, CHIP 470 5% 1/10W
R449	1-216-660-11	s	METAL, CHIP 2.4k 0.5% 1/10W
R450	1-216-624-11	s	METAL, CHIP 75 0.5% 1/10W
R451	1-216-097-91	s	METAL, CHIP 100k 0.5% 1/10W
R452	1-216-073-00	s	METAL, CHIP 10k 5% 1/10W
R453	1-216-081-00	s	METAL, CHIP 22k 5% 1/10W
R454	1-216-095-00	s	METAL, CHIP 82k 5% 1/10W
R455	1-216-073-00	s	METAL, CHIP 10k 5% 1/10W
R456	1-216-624-11	s	METAL, CHIP 75 0.5% 1/10W
R457	1-216-624-11	s	METAL, CHIP 75 0.5% 1/10W
R458	1-216-675-11	s	METAL, CHIP 10k 0.5% 1/10W
R459	1-216-624-11	s	METAL, CHIP 75 0.5% 1/10W
R501	1-216-089-91	s	METAL, CHIP 47k 5% 1/10W
R502	1-216-683-11	s	METAL, CHIP 22k 0.5% 1/10W
R503	1-216-659-11	s	METAL, CHIP 2.2k 0.5% 1/10W
R504	1-216-675-11	s	METAL, CHIP 10k 0.5% 1/10W
R505	1-216-675-11	s	METAL, CHIP 10k 0.5% 1/10W
R506	1-216-659-11	s	METAL, CHIP 2.2k 0.5% 1/10W
R507	1-216-295-91	s	RES, CHIP 0
R508	1-216-073-00	s	METAL, CHIP 10k 5% 1/10W
R509	1-216-669-11	s	METAL, CHIP 5.6k 0.5% 1/10W
R510	1-216-675-11	s	METAL, CHIP 10k 0.5% 1/10W
R511	1-216-663-11	s	METAL, CHIP 3.3k 0.5% 1/10W
R512	1-216-671-11	s	METAL, CHIP 6.8k 0.5% 1/10W
R513	1-216-677-11	s	METAL, CHIP 12k 0.5% 1/10W
R515	1-216-057-00	s	METAL, CHIP 2.2k 5% 1/10W
R516	1-216-691-11	s	METAL, CHIP 47k 0.5% 1/10W
R517	1-216-677-11	s	METAL, CHIP 12k 0.5% 1/10W
R518	1-216-679-11	s	METAL, CHIP 15k 0.5% 1/10W
R519	1-216-671-11	s	METAL, CHIP 6.8k 0.5% 1/10W
R520	1-216-679-11	s	METAL, CHIP 15k 0.5% 1/10W
R521	1-216-089-91	s	METAL, CHIP 47k 5% 1/10W
R522	1-216-097-91	s	METAL, CHIP 100k 5% 1/10W
R523	1-216-089-91	s	METAL, CHIP 47k 5% 1/10W
R524	1-216-675-11	s	METAL, CHIP 10k 0.5% 1/10W
R525	1-216-651-11	s	METAL, CHIP 1k 0.5% 1/10W
R526	1-216-675-11	s	METAL, CHIP 10k 0.5% 1/10W
R527	1-216-665-11	s	METAL, CHIP 3.9k 0.5% 1/10W
R528	1-216-677-11	s	METAL, CHIP 12k 0.5% 1/10W
R529	1-216-049-91	s	METAL, CHIP 1k 5% 1/10W
R530	1-216-065-00	s	METAL, CHIP 4.7k 5% 1/10W
R531	1-216-049-91	s	METAL, CHIP 1k 5% 1/10W
R532	1-216-049-91	s	METAL, CHIP 1k 5% 1/10W
R533	1-216-677-11	s	METAL, CHIP 12k 0.5% 1/10W
R534	1-216-051-00	s	METAL, CHIP 1.2k 5% 1/10W
R535	1-216-675-11	s	METAL, CHIP 10k 0.5% 1/10W
R536	1-216-059-00	s	METAL, CHIP 2.7k 5% 1/10W
R537	1-216-643-11	s	METAL, CHIP 470 0.5% 1/10W
R538	1-216-679-11	s	METAL, CHIP 15k 0.5% 1/10W
R539	1-216-049-91	s	METAL, CHIP 1k 5% 1/10W

(IO-149 BOARD(For NTSC); Suffix -12)

Ref. No. or Q'ty	Part No.	SP	Description
R540	1-216-057-00	s	METAL, CHIP 2.2k 5% 1/10W
R541	1-216-651-11	s	METAL, CHIP 1k 0.5% 1/10W
R542	1-216-057-00	s	METAL, CHIP 2.2k 5% 1/10W
R543	1-216-073-00	s	METAL, CHIP 10k 5% 1/10W
R544	1-216-651-11	s	METAL, CHIP 1k 0.5% 1/10W
R545	1-216-683-11	s	METAL, CHIP 22k 0.5% 1/10W
R546	1-216-057-00	s	METAL, CHIP 2.2k 5% 1/10W
R547	1-216-017-91	s	METAL, CHIP 47 5% 1/10W
R548	1-216-683-11	s	METAL, CHIP 22k 0.5% 1/10W
R549	1-216-666-11	s	METAL, CHIP 4.3k 0.5% 1/10W
R550	1-216-655-11	s	METAL, CHIP 1.5k 0.5% 1/10W
R551	1-216-097-91	s	METAL, CHIP 100k 5% 1/10W
R552	1-216-059-00	s	METAL, CHIP 2.7k 5% 1/10W
R553	1-216-671-11	s	METAL, CHIP 6.8k 0.5% 1/10W
R554	1-216-655-11	s	METAL, CHIP 1.5k 0.5% 1/10W
R555	1-216-059-00	s	METAL, CHIP 2.7k 5% 1/10W
R556	1-216-073-00	s	METAL, CHIP 10k 5% 1/10W
R557	1-216-683-11	s	METAL, CHIP 22k 0.5% 1/10W
R558	1-216-017-91	s	METAL, CHIP 47 5% 1/10W
R559	1-216-687-11	s	METAL, CHIP 33k 0.5% 1/10W
R560	1-216-679-11	s	METAL, CHIP 15k 0.5% 1/10W
R561	1-216-683-11	s	METAL, CHIP 22k 0.5% 1/10W
R562	1-216-069-00	s	METAL, CHIP 6.8k 5% 1/10W
R563	1-216-687-11	s	METAL, CHIP 33k 0.5% 1/10W
R564	1-216-687-11	s	METAL, CHIP 33k 0.5% 1/10W
R565	1-216-047-91	s	METAL, CHIP 820 5% 1/10W
R566	1-216-049-91	s	METAL, CHIP 1k 5% 1/10W
R567	1-216-691-11	s	METAL, CHIP 47k 0.5% 1/10W
R568	1-216-025-91	s	METAL, CHIP 100 5% 1/10W
R569	1-216-041-00	s	METAL, CHIP 470 5% 1/10W
R570	1-216-669-11	s	METAL, CHIP 5.6k 0.5% 1/10W
R571	1-216-081-00	s	METAL, CHIP 22k 5% 1/10W
R572	1-216-049-91	s	METAL, CHIP 1k 5% 1/10W
R573	1-216-059-00	s	METAL, CHIP 2.7k 5% 1/10W
R574	1-216-681-11	s	METAL, CHIP 18k 0.5% 1/10W
R575	1-216-041-00	s	METAL, CHIP 470 5% 1/10W
R576	1-216-624-11	s	METAL, CHIP 75 0.5% 1/10W
R577	1-216-687-11	s	METAL, CHIP 33k 0.5% 1/10W
R579	1-218-772-11	s	METAL, CHIP 680k 0.5% 1/10W
R580	1-216-017-91	s	METAL, CHIP 47 5% 1/10W
R581	1-216-025-91	s	METAL, CHIP 100 5% 1/10W
R582	1-216-061-00	s	METAL, CHIP 3.3k 5% 1/10W
R583	1-216-097-91	s	METAL, CHIP 100k 5% 1/10W
R584	1-216-017-91	s	METAL, CHIP 47 5% 1/10W
R585	1-216-049-91	s	METAL, CHIP 1k 5% 1/10W
R586	1-216-049-91	s	METAL, CHIP 1k 5% 1/10W
R587	1-216-049-91	s	METAL, CHIP 1k 5% 1/10W
R588	1-216-093-00	s	METAL, CHIP 68k 5% 1/10W
R589	1-216-049-91	s	METAL, CHIP 1k 5% 1/10W
R590	1-208-797-11	s	METAL, CHIP 4.3k 0.5% 1/10W
R591	1-216-045-00	s	METAL, CHIP 680 5% 1/10W
R592	1-216-081-00	s	METAL, CHIP 22k 5% 1/10W
R593	1-208-804-11	s	METAL, CHIP 8.2k 0.5% 1/10W
R594	1-216-025-91	s	METAL, CHIP 100 5% 1/10W
R595	1-216-025-91	s	METAL, CHIP 100 5% 1/10W
R596	1-208-774-11	s	METAL, CHIP 470 0.5% 1/10W
R597	1-208-774-11	s	METAL, CHIP 470 0.5% 1/10W
R601	1-216-089-91	s	METAL, CHIP 47k 5% 1/10W
R602	1-216-097-91	s	METAL, CHIP 100k 5% 1/10W

(IO-149 BOARD(For NTSC); Suffix -12)

Ref. No. or Q'ty	Part No.	SP	Description
R604	1-216-097-91	s	METAL, CHIP 100k 5% 1/10W
R606	1-216-073-00	s	METAL, CHIP 10k 5% 1/10W
R607	1-216-065-00	s	METAL, CHIP 4.7k 5% 1/10W
R608	1-216-017-91	s	METAL, CHIP 47 5% 1/10W
R609	1-216-295-91	s	RES, CHIP 0
R610	1-216-049-91	s	METAL, CHIP 1k 5% 1/10W
R612	1-216-085-00	s	METAL, CHIP 33k 5% 1/10W
R613	1-216-065-00	s	METAL, CHIP 4.7k 5% 1/10W
R614	1-216-073-00	s	METAL, CHIP 10k 5% 1/10W
R616	1-216-017-91	s	METAL, CHIP 47 5% 1/10W
R617	1-216-085-00	s	METAL, CHIP 33k 5% 1/10W
R618	1-216-085-00	s	METAL, CHIP 33k 5% 1/10W
R619	1-216-658-11	s	METAL, CHIP 2k 0.5% 1/10W
R620	1-216-051-00	s	METAL, CHIP 1.2k 5% 1/10W
R621	1-216-658-11	s	METAL, CHIP 2k 0.5% 1/10W
R622	1-216-051-00	s	METAL, CHIP 1.2k 5% 1/10W
R623	1-216-643-11	s	METAL, CHIP 470 0.5% 1/10W
R624	1-216-037-00	s	METAL, CHIP 330 5% 1/10W
R625	1-216-648-11	s	METAL, CHIP 750 0.5% 1/10W
R626	1-216-037-00	s	METAL, CHIP 330 5% 1/10W
R627	1-216-071-00	s	METAL, CHIP 8.2k 5% 1/10W
R628	1-216-686-11	s	METAL, CHIP 30k 0.5% 1/10W
R629	1-216-069-00	s	METAL, CHIP 6.8k 5% 1/10W
R630	1-216-686-11	s	METAL, CHIP 30k 0.5% 1/10W
R631	1-216-041-00	s	METAL, CHIP 470 5% 1/10W
R632	1-216-041-00	s	METAL, CHIP 470 5% 1/10W
R633	1-216-017-91	s	METAL, CHIP 47 5% 1/10W
R634	1-216-097-91	s	METAL, CHIP 100k 5% 1/10W
R635	1-216-667-11	s	METAL, CHIP 4.7k 0.5% 1/10W
R637	1-216-115-00	s	METAL, CHIP 560k 5% 1/10W
R638	1-216-641-11	s	METAL, CHIP 390 0.5% 1/10W
R639	1-216-017-91	s	METAL, CHIP 47 5% 1/10W
R640	1-216-667-11	s	METAL, CHIP 4.7k 0.5% 1/10W
R641	1-216-641-11	s	METAL, CHIP 390 0.5% 1/10W
R642	1-216-665-11	s	METAL, CHIP 3.9k 0.5% 1/10W
R643	1-216-677-11	s	METAL, CHIP 12k 0.5% 1/10W
R644	1-216-638-11	s	METAL, CHIP 300 0.5% 1/10W
R645	1-216-638-11	s	METAL, CHIP 300 0.5% 1/10W
R646	1-216-049-91	s	METAL, CHIP 1k 5% 1/10W
R647	1-216-049-91	s	METAL, CHIP 1k 5% 1/10W
R648	1-216-037-00	s	METAL, CHIP 330 5% 1/10W
R649	1-216-037-00	s	METAL, CHIP 330 5% 1/10W
R650	1-216-049-91	s	METAL, CHIP 1k 5% 1/10W
R651	1-216-049-91	s	METAL, CHIP 1k 5% 1/10W
R652	1-216-025-91	s	METAL, CHIP 100 5% 1/10W
R653	1-216-025-91	s	METAL, CHIP 100 5% 1/10W
R654	1-216-025-91	s	METAL, CHIP 100 5% 1/10W
R655	1-216-049-91	s	METAL, CHIP 1k 5% 1/10W
R656	1-216-049-91	s	METAL, CHIP 1k 5% 1/10W
R657	1-216-025-91	s	METAL, CHIP 100 5% 1/10W
R658	1-216-025-91	s	METAL, CHIP 100 5% 1/10W
R659	1-216-049-91	s	METAL, CHIP 1k 5% 1/10W
R660	1-216-295-91	s	RES, CHIP 0
R661	1-216-295-91	s	RES, CHIP 0
R662	1-216-295-91	s	RES, CHIP 0
RB101	1-239-999-11	s	RESISTOR BLOCK, CHIP 1k x 4
RB102	1-239-998-11	s	RESISTOR BLOCK, CHIP 100 x 4
RB103	1-233-237-11	s	RESISTOR BLOCK, CHIP 100k x 4
RB701	1-233-234-11	s	RESISTOR BLOCK, CHIP 2.2k x 4

(IO-149 BOARD(For NTSC); Suffix -12)

Ref. No. or Q'ty	Part No.	SP	Description
RV101	1-237-034-11	s	RES, ADJ METAL 2k
RV102	1-237-034-11	s	RES, ADJ METAL 2k
RV103	1-237-034-11	s	RES, ADJ METAL 2k
RV104	1-237-034-11	s	RES, ADJ METAL 2k
RV105	1-237-035-11	s	RES, ADJ METAL 5k
RV106	1-237-035-11	s	RES, ADJ METAL 5k
RV107	1-237-036-11	s	RES, ADJ METAL 10k
RV108	1-237-038-11	s	RES, ADJ METAL 50k
RV109	1-237-038-11	s	RES, ADJ METAL 50k
RV110	1-237-035-11	s	RES, ADJ METAL 5k
RV111	1-237-035-11	s	RES, ADJ METAL 5k
RV112	1-237-034-11	s	RES, ADJ METAL 2k
RV301	1-237-033-11	s	RES, ADJ METAL 1k
RV302	1-237-034-11	s	RES, ADJ METAL 2k
RV303	1-237-032-11	s	RES, ADJ METAL 500
RV304	1-237-033-11	s	RES, ADJ METAL 1k
RV305	1-237-035-11	s	RES, ADJ METAL 5k
RV306	1-237-033-11	s	RES, ADJ METAL 1k
RV307	1-237-033-11	s	RES, ADJ METAL 1k
RV308	1-237-032-11	s	RES, ADJ METAL 500
RV309	1-237-034-11	s	RES, ADJ METAL 2k
RV310	1-237-034-11	s	RES, ADJ METAL 2k
RV311	1-237-032-11	s	RES, ADJ METAL 500
RV312	1-237-035-11	s	RES, ADJ METAL 5k
RV313	1-237-035-11	s	RES, ADJ METAL 5k
RV314	1-237-032-11	s	RES, ADJ METAL 500
RV315	1-237-032-11	s	RES, ADJ METAL 500
RV316	1-237-033-11	s	RES, ADJ METAL 1k
RV317	1-237-033-11	s	RES, ADJ METAL 1k
RV318	1-237-030-11	s	RES, ADJ METAL 100
RV319	1-237-030-11	s	RES, ADJ METAL 100
RV501	1-237-035-11	s	RES, ADJ METAL 5k
RV502	1-237-036-11	s	RES, ADJ METAL 10k
RV503	1-237-037-11	s	RES, ADJ METAL 20k
RV504	1-237-036-11	s	RES, ADJ METAL 10k
RV505	1-237-034-11	s	RES, ADJ METAL 2k
RV506	1-237-033-11	s	RES, ADJ METAL 1k
RV601	1-237-035-11	s	RES, ADJ METAL 5k
TH101	1-809-352-11	s	THERMISTOR, CHIP 1.5k
TP101	1-535-877-22	o	CHECKER, CHIP
TP102	1-535-877-22	o	CHECKER, CHIP
TP103	1-535-877-22	o	CHECKER, CHIP
TP301	1-535-877-22	o	CHECKER, CHIP
TP302	1-535-877-22	o	CHECKER, CHIP
TP303	1-535-877-22	o	CHECKER, CHIP
TP304	1-535-877-22	o	CHECKER, CHIP
TP305	1-535-877-22	o	CHECKER, CHIP
TP306	1-535-877-22	o	CHECKER, CHIP
TP307	1-535-877-22	o	CHECKER, CHIP
TP501	1-535-877-22	o	CHECKER, CHIP
TP502	1-535-877-22	o	CHECKER, CHIP
TP601	1-535-877-22	o	CHECKER, CHIP
TP602	1-535-877-22	o	CHECKER, CHIP
TP603	1-535-877-22	o	CHECKER, CHIP
TP604	1-535-877-22	o	CHECKER, CHIP
X101	1-767-260-11	s	CRYSTAL 13.50MHz
X102	1-767-260-11	s	CRYSTAL 13.50MHz

(IO-149 BOARD(For NTSC); Suffix -12)

Ref. No. or Q'ty	Part No.	SP	Description
X103	1-767-260-11	s	CRYSTAL 13.50MHz
X601	1-767-262-11	s	CRYSTAL 27.00MHz
X602	1-527-722-00	s	CRYSTAL 14.31818MHz

IO-149 BOARD(For NTSC); Suffix -11

Ref. No.
or Q'ty Part No. SP Description

This list corresponds to the board suffix number -11.

The parts marked * are different, depending on the product serial numbers, as shown below:

*1) Serial number; 10001 through 10020 (For DSR-60 J)
Serial number; 10001 through 10030 (For DSR-60 UC)
*2) Serial number; 10021 and higher (For DSR-60 J)
Serial number; 10031 and higher (For DSR-60 UC)
*3) Serial number; 10001 through 10120 (For DSR-60 J)
Serial number; 10001 through 10180 (For DSR-60 UC)
*4) Serial number; 10121 and higher (For DSR-60 J)
Serial number; 10181 and higher (For DSR-60 UC)

Ref. No. or Q'ty	Part No.	SP	Description
1pc	A-8312-954-A	o	MOUNTED CIRCUIT BOARD, IO-149B
1pc	7-621-759-45	s	+PSW, 2.6x6
1pc	3-179-085-01	s	LEVER (L), PRINTED CIRCUIT BOARD
1pc	3-179-084-01	s	LEVER (R), PRINTED CIRCUIT BOARD
C1	1-126-392-11	s	ELECT, CHIP 100uF 20% 6.3V
C2	1-163-038-91	s	CERAMIC, CHIP 0.1uF 25V
C3	1-126-392-11	s	ELECT, CHIP 100uF 20% 6.3V
C4	1-163-038-91	s	CERAMIC, CHIP 0.1uF 25V
C5	1-126-392-11	s	ELECT, CHIP 100uF 20% 6.3V
C6	1-163-038-91	s	CERAMIC, CHIP 0.1uF 25V
C11	1-126-396-11	s	ELECT, CHIP 47uF 20% 16V
C12	1-163-038-91	s	CERAMIC, CHIP 0.1uF 25V
C13	1-126-396-11	s	ELECT, CHIP 47uF 20% 16V
C14	1-163-038-91	s	CERAMIC, CHIP 0.1uF 25V
C15	1-126-396-11	s	ELECT, CHIP 47uF 20% 16V
C16	1-163-038-91	s	CERAMIC, CHIP 0.1uF 25V
C21	1-126-396-11	s	ELECT, CHIP 47uF 20% 16V
C22	1-163-038-91	s	CERAMIC, CHIP 0.1uF 25V
C23	1-126-396-11	s	ELECT, CHIP 47uF 20% 16V
C24	1-163-038-91	s	CERAMIC, CHIP 0.1uF 25V
C25	1-126-396-11	s	ELECT, CHIP 47uF 20% 16V
C26	1-163-038-91	s	CERAMIC, CHIP 0.1uF 25V
C31	1-126-396-11	s	ELECT, CHIP 47uF 20% 16V
C32	1-163-038-91	s	CERAMIC, CHIP 0.1uF 25V
C33	1-126-396-11	s	ELECT, CHIP 47uF 20% 16V
C34	1-163-038-91	s	CERAMIC, CHIP 0.1uF 25V
C35	1-126-396-11	s	ELECT, CHIP 47uF 20% 16V
C36	1-163-038-91	s	CERAMIC, CHIP 0.1uF 25V
C37	1-126-396-11	s	ELECT, CHIP 47uF 20% 16V
C38	1-163-038-91	s	CERAMIC, CHIP 0.1uF 25V
C39	1-126-396-11	s	ELECT, CHIP 47uF 20% 16V
C40	1-163-038-91	s	CERAMIC, CHIP 0.1uF 25V
C101	1-164-004-11	s	CERAMIC, CHIP 0.1uF 10% 25V
C102	1-163-037-11	s	CERAMIC, CHIP 0.022uF 10% 25V
C103	1-126-396-11	s	ELECT, CHIP 47uF 20% 16V
C104	1-163-037-11	s	CERAMIC, CHIP 0.022uF 10% 25V
C105	1-163-037-11	s	CERAMIC, CHIP 0.022uF 10% 25V
C106	1-163-037-11	s	CERAMIC, CHIP 0.022uF 10% 25V
C107	1-163-037-11	s	CERAMIC, CHIP 0.022uF 10% 25V
C108	1-163-235-11	s	CERAMIC, CHIP 22pF 5% 50V
C109	1-163-037-11	s	CERAMIC, CHIP 0.022uF 10% 25V
C110	1-164-004-11	s	CERAMIC, CHIP 0.1uF 10% 25V
C111	1-164-004-11	s	CERAMIC, CHIP 0.1uF 10% 25V
C112	1-163-275-11	s	CERAMIC, CHIP 0.001uF 5% 50V
C113	1-163-275-11	s	CERAMIC, CHIP 0.001uF 5% 50V
C114	1-164-004-11	s	CERAMIC, CHIP 0.1uF 10% 25V
C115	1-164-004-11	s	CERAMIC, CHIP 0.1uF 10% 25V

(IO-149 BOARD(For NTSC); Suffix -11)

Ref. No. or Q'ty	Part No.	SP	Description
C116	1-163-275-11	s	CERAMIC, CHIP 0.001uF 5% 50V
C117	1-163-275-11	s	CERAMIC, CHIP 0.001uF 5% 50V
C118	1-163-237-11	s	CERAMIC, CHIP 27pF 5% 50V
C119	1-163-237-11	s	CERAMIC, CHIP 27pF 5% 50V
C120	1-163-037-11	s	CERAMIC, CHIP 0.022uF 10% 25V
C121	1-163-037-11	s	CERAMIC, CHIP 0.022uF 10% 25V
C122	1-163-037-11	s	CERAMIC, CHIP 0.022uF 10% 25V
C123	1-164-004-11	s	CERAMIC, CHIP 0.1uF 10% 25V
C124	1-163-037-11	s	CERAMIC, CHIP 0.022uF 10% 25V
C125	1-126-392-11	s	ELECT, CHIP 100uF 20% 6.3V
C126	1-163-275-11	s	CERAMIC, CHIP 0.001uF 5% 50V
C127	1-164-004-11	s	CERAMIC, CHIP 0.1uF 10% 25V
C128	1-163-037-11	s	CERAMIC, CHIP 0.022uF 10% 25V
C129	1-163-037-11	s	CERAMIC, CHIP 0.022uF 10% 25V
C130	1-163-275-11	s	CERAMIC, CHIP 0.001uF 5% 50V
C131	1-163-037-11	s	CERAMIC, CHIP 0.022uF 10% 25V
C132	1-163-037-11	s	CERAMIC, CHIP 0.022uF 10% 25V
C133	1-163-237-11	s	CERAMIC, CHIP 27pF 5% 50V
C134	1-126-394-11	s	ELECT, CHIP 10uF 20% 16V
C135	1-126-394-11	s	ELECT, CHIP 10uF 20% 16V
C136	1-163-037-11	s	CERAMIC, CHIP 0.022uF 10% 25V
C137	1-163-037-11	s	CERAMIC, CHIP 0.022uF 10% 25V
C138	1-163-037-11	s	CERAMIC, CHIP 0.022uF 10% 25V
C139	1-163-037-11	s	CERAMIC, CHIP 0.022uF 10% 25V
C140	1-163-037-11	s	CERAMIC, CHIP 0.022uF 10% 25V
C141	1-163-037-11	s	CERAMIC, CHIP 0.022uF 10% 25V
C142	1-126-392-11	s	ELECT, CHIP 100uF 20% 6.3V
C143	1-126-392-11	s	ELECT, CHIP 100uF 20% 6.3V
C144	1-163-037-11	s	CERAMIC, CHIP 0.022uF 10% 25V
C145	1-163-037-11	s	CERAMIC, CHIP 0.022uF 10% 25V
C146	1-163-037-11	s	CERAMIC, CHIP 0.022uF 10% 25V
C147	1-163-037-11	s	CERAMIC, CHIP 0.022uF 10% 25V
C148	1-163-037-11	s	CERAMIC, CHIP 0.022uF 10% 25V
C149	1-163-037-11	s	CERAMIC, CHIP 0.022uF 10% 25V
C150	1-163-037-11	s	CERAMIC, CHIP 0.022uF 10% 25V
C151	1-163-037-11	s	CERAMIC, CHIP 0.022uF 10% 25V
C152	1-163-037-11	s	CERAMIC, CHIP 0.022uF 10% 25V
C153	1-126-391-11	s	ELECT, CHIP 47uF 20% 6.3V
C154	1-163-231-11	s	CERAMIC, CHIP 15pF 5% 50V
C155	1-163-037-11	s	CERAMIC, CHIP 0.022uF 10% 25V
C156	1-163-038-91	s	CERAMIC, CHIP 0.1uF 25V
C157	1-163-037-11	s	CERAMIC, CHIP 0.022uF 10% 25V
C158	1-163-037-11	s	CERAMIC, CHIP 0.022uF 10% 25V
C159	1-163-038-91	s	CERAMIC, CHIP 0.1uF 25V
C160	1-163-037-11	s	CERAMIC, CHIP 0.022uF 10% 25V
C161	1-163-037-11	s	CERAMIC, CHIP 0.022uF 10% 25V
C162	1-163-038-91	s	CERAMIC, CHIP 0.1uF 25V
C163	1-163-038-91	s	CERAMIC, CHIP 0.1uF 25V
C164	1-163-038-91	s	CERAMIC, CHIP 0.1uF 25V
C165	1-126-391-11	s	ELECT, CHIP 47uF 20% 6.3V
C166	1-163-037-11	s	CERAMIC, CHIP 0.022uF 10% 25V
C167	1-126-391-11	s	ELECT, CHIP 47uF 20% 6.3V
C168	1-163-037-11	s	CERAMIC, CHIP 0.022uF 10% 25V
C169	1-163-037-11	s	CERAMIC, CHIP 0.022uF 10% 25V
C170	1-163-037-11	s	CERAMIC, CHIP 0.022uF 10% 25V
C171	1-126-391-11	s	ELECT, CHIP 47uF 20% 6.3V
C172	1-126-396-11	s	ELECT, CHIP 47uF 20% 16V
C173	1-126-396-11	s	ELECT, CHIP 47uF 20% 16V
C174	1-126-391-11	s	ELECT, CHIP 47uF 20% 6.3V

(IO-149 BOARD(For NTSC); Suffix -11)

Ref. No. or Q'ty	Part No.	SP	Description
C175	1-126-391-11	s	ELECT, CHIP 47uF 20% 6.3V
C176	1-126-391-11	s	ELECT, CHIP 47uF 20% 6.3V
C177	1-126-391-11	s	ELECT, CHIP 47uF 20% 6.3V
C178	1-126-391-11	s	ELECT, CHIP 47uF 20% 6.3V
C179	1-163-037-11	s	CERAMIC, CHIP 0.022uF 10% 25V
C180	1-163-037-11	s	CERAMIC, CHIP 0.022uF 10% 25V
C181	1-163-037-11	s	CERAMIC, CHIP 0.022uF 10% 25V
C182	1-163-037-11	s	CERAMIC, CHIP 0.022uF 10% 25V
C183	1-163-037-11	s	CERAMIC, CHIP 0.022uF 10% 25V
C184	1-163-037-11	s	CERAMIC, CHIP 0.022uF 10% 25V
C185	1-163-037-11	s	CERAMIC, CHIP 0.022uF 10% 25V
C186	1-163-037-11	s	CERAMIC, CHIP 0.022uF 10% 25V
C187	1-163-037-11	s	CERAMIC, CHIP 0.022uF 10% 25V
C188	1-163-235-11	s	CERAMIC, CHIP 22pF 5% 50V
C189	1-163-235-11	s	CERAMIC, CHIP 22pF 5% 50V
C190	1-163-099-00	s	CERAMIC, CHIP 18pF 5% 50V
C191	1-163-037-11	s	CERAMIC, CHIP 0.022uF 10% 25V
C192	1-163-037-11	s	CERAMIC, CHIP 0.022uF 10% 25V
C193	1-163-037-11	s	CERAMIC, CHIP 0.022uF 10% 25V
C194	1-126-401-11	s	ELECT, CHIP 1uF 20% 50V
C195	1-126-401-11	s	ELECT, CHIP 1uF 20% 50V
C196	1-126-394-11	s	ELECT, CHIP 10uF 20% 16V
C197	1-126-401-11	s	ELECT, CHIP 1uF 20% 50V
C198	1-126-394-11	s	ELECT, CHIP 10uF 20% 16V
C199	1-163-038-91	s	CERAMIC, CHIP 0.1uF 25V
C200	1-126-401-11	s	ELECT, CHIP 1uF 20% 50V
C201	1-163-038-91	s	CERAMIC, CHIP 0.1uF 25V
C202	1-163-809-11	s	CERAMIC, CHIP 0.047uF 10% 25V
C203	1-163-809-11	s	CERAMIC, CHIP 0.047uF 10% 25V
C204	1-163-809-11	s	CERAMIC, CHIP 0.047uF 10% 25V
C205	1-163-227-11	s	CERAMIC, CHIP 10pF 5% 50V
C206	1-163-037-11	s	CERAMIC, CHIP 0.022uF 10% 25V
C207	1-163-037-11	s	CERAMIC, CHIP 0.022uF 10% 25V
C208	1-163-037-11	s	CERAMIC, CHIP 0.022uF 10% 25V
C209	1-163-037-11	s	CERAMIC, CHIP 0.022uF 10% 25V
C210	1-163-037-11	s	CERAMIC, CHIP 0.022uF 10% 25V
C211	1-126-396-11	s	ELECT, CHIP 47uF 20% 16V
C212	1-163-037-11	s	CERAMIC, CHIP 0.022uF 10% 25V
C213	1-163-227-11	s	CERAMIC, CHIP 10pF 5% 50V
C214	1-163-037-11	s	CERAMIC, CHIP 0.022uF 10% 25V
C215	1-126-396-11	s	ELECT, CHIP 47uF 20% 16V
C216	1-163-037-11	s	CERAMIC, CHIP 0.022uF 10% 25V
C217	1-126-390-11	s	ELECT, CHIP 22uF 20% 6.3V
C218	1-163-037-11	s	CERAMIC, CHIP 0.022uF 10% 25V
C219	1-163-037-11	s	CERAMIC, CHIP 0.022uF 10% 25V
C220	1-163-249-11	s	CERAMIC, CHIP 82pF 5% 50V
C221	1-163-243-11	s	CERAMIC, CHIP 47pF 5% 50V
C222	1-163-227-11	s	CERAMIC, CHIP 10pF 5% 50V
C223	1-163-118-00	s	CERAMIC, CHIP 110pF 5% 50V
C224	1-163-037-11	s	CERAMIC, CHIP 0.022uF 10% 25V
C225	1-163-224-11	s	CERAMIC, CHIP 7pF 50V
C226	1-163-037-11	s	CERAMIC, CHIP 0.022uF 10% 25V
C228	1-163-231-11	s	CERAMIC, CHIP 15pF 5% 50V
C229	1-163-259-91	s	CERAMIC, CHIP 220pF 5% 50V
C230	1-126-390-11	s	ELECT, CHIP 22uF 20% 6.3V
C231	1-163-037-11	s	CERAMIC, CHIP 0.022uF 10% 25V
C232	1-163-037-11	s	CERAMIC, CHIP 0.022uF 10% 25V
C233	1-163-037-11	s	CERAMIC, CHIP 0.022uF 10% 25V
C234	1-163-037-11	s	CERAMIC, CHIP 0.022uF 10% 25V

(IO-149 BOARD(For NTSC); Suffix -11)

Ref. No. or Q'ty	Part No.	SP	Description
C235	1-163-227-11	s	CERAMIC, CHIP 10pF 5% 50V
C301	1-126-391-11	s	ELECT, CHIP 47uF 20% 6.3V
C302	1-126-391-11	s	ELECT, CHIP 47uF 20% 6.3V
C303	1-163-038-91	s	CERAMIC, CHIP 0.1uF 25V
C304	1-126-391-11	s	ELECT, CHIP 47uF 20% 6.3V
C305	1-126-391-11	s	ELECT, CHIP 47uF 20% 6.3V
C306	1-163-038-91	s	CERAMIC, CHIP 0.1uF 25V
C307	1-163-038-91	s	CERAMIC, CHIP 0.1uF 25V
C308	1-163-038-91	s	CERAMIC, CHIP 0.1uF 25V
C309	1-163-231-11	s	CERAMIC, CHIP 15pF 5% 50V
C310	1-163-037-11	s	CERAMIC, CHIP 0.022uF 10% 25V
C311	1-163-120-00	s	CERAMIC, CHIP 130pF 5% 50V
C312	1-163-037-11	s	CERAMIC, CHIP 0.022uF 10% 25V
C313	1-163-038-91	s	CERAMIC, CHIP 0.1uF 25V
C314	1-163-038-91	s	CERAMIC, CHIP 0.1uF 25V
C315	1-163-037-11	s	CERAMIC, CHIP 0.022uF 10% 25V
C316	1-163-037-11	s	CERAMIC, CHIP 0.022uF 10% 25V
C317	1-163-037-11	s	CERAMIC, CHIP 0.022uF 10% 25V
C318	1-163-231-11	s	CERAMIC, CHIP 15pF 5% 50V
C319	1-163-120-00	s	CERAMIC, CHIP 130pF 5% 50V
C320	1-163-037-11	s	CERAMIC, CHIP 0.022uF 10% 25V
C321	1-126-391-11	s	ELECT, CHIP 47uF 20% 6.3V
C322	1-163-038-91	s	CERAMIC, CHIP 0.1uF 25V
C323	1-163-038-91	s	CERAMIC, CHIP 0.1uF 25V
C324	1-163-038-91	s	CERAMIC, CHIP 0.1uF 25V
C325	1-163-038-91	s	CERAMIC, CHIP 0.1uF 25V
C326	1-126-396-11	s	ELECT, CHIP 47uF 20% 16V
C327	1-126-391-11	s	ELECT, CHIP 47uF 20% 6.3V
C328	1-163-037-11	s	CERAMIC, CHIP 0.022uF 10% 25V
C329	1-126-396-11	s	ELECT, CHIP 47uF 20% 16V
C330	1-163-037-11	s	CERAMIC, CHIP 0.022uF 10% 25V
C331	1-126-396-11	s	ELECT, CHIP 47uF 20% 16V
C332	1-163-038-91	s	CERAMIC, CHIP 0.1uF 25V
C333	1-163-038-91	s	CERAMIC, CHIP 0.1uF 25V
C334	1-163-224-11	s	CERAMIC, CHIP 7pF 50V
C335	1-163-231-11	s	CERAMIC, CHIP 15pF 5% 50V
C336	1-163-037-11	s	CERAMIC, CHIP 0.022uF 10% 25V
C337	1-163-231-11	s	CERAMIC, CHIP 15pF 5% 50V
C338	1-163-038-91	s	CERAMIC, CHIP 0.1uF 25V
C339	1-163-243-11	s	CERAMIC, CHIP 47pF 5% 50V
C340	1-163-243-11	s	CERAMIC, CHIP 47pF 5% 50V
C341	1-163-239-11	s	CERAMIC, CHIP 33pF 5% 50V
C342	1-163-239-11	s	CERAMIC, CHIP 33pF 5% 50V
C343	1-126-392-11	s	ELECT, CHIP 100uF 20% 6.3V
C344	1-163-235-11	s	CERAMIC, CHIP 22pF 5% 50V
C345	1-163-235-11	s	CERAMIC, CHIP 22pF 5% 50V
C346	1-126-394-11	s	ELECT, CHIP 10uF 20% 16V
C347	1-126-394-11	s	ELECT, CHIP 10uF 20% 16V
C348	1-126-391-11	s	ELECT, CHIP 47uF 20% 6.3V
C349	1-163-809-11	s	CERAMIC, CHIP 0.047uF 10% 25V
C350	1-126-391-11	s	ELECT, CHIP 47uF 20% 6.3V
C351	1-163-038-91	s	CERAMIC, CHIP 0.1uF 25V
C352	1-163-037-11	s	CERAMIC, CHIP 0.022uF 10% 25V
C353	1-163-037-11	s	CERAMIC, CHIP 0.022uF 10% 25V
C354	1-163-038-91	s	CERAMIC, CHIP 0.1uF 25V
C355	1-163-227-11	s	CERAMIC, CHIP 10pF 5% 50V
C356	1-163-037-11	s	CERAMIC, CHIP 0.022uF 10% 25V
C357	1-163-037-11	s	CERAMIC, CHIP 0.022uF 10% 25V
C358	1-163-037-11	s	CERAMIC, CHIP 0.022uF 10% 25V

(IO-149 BOARD(For NTSC); Suffix -11)

Ref. No. or Q'ty	Part No.	SP	Description
C359	1-163-038-91	s	CERAMIC, CHIP 0.1uF 25V
C360	1-163-038-91	s	CERAMIC, CHIP 0.1uF 25V
C361	1-163-038-91	s	CERAMIC, CHIP 0.1uF 25V
C362	1-163-243-11	s	CERAMIC, CHIP 47pF 5% 50V
C363	1-163-037-11	s	CERAMIC, CHIP 0.022uF 10% 25V
C364	1-163-037-11	s	CERAMIC, CHIP 0.022uF 10% 25V
C365	1-163-222-11	s	CERAMIC, CHIP 5pF 50V
C366	1-163-037-11	s	CERAMIC, CHIP 0.022uF 10% 25V
C367	1-163-243-11	s	CERAMIC, CHIP 47pF 5% 50V
C368	1-163-037-11	s	CERAMIC, CHIP 0.022uF 10% 25V
C369	1-163-037-11	s	CERAMIC, CHIP 0.022uF 10% 25V
C370	1-163-037-11	s	CERAMIC, CHIP 0.022uF 10% 25V
C371	1-163-037-11	s	CERAMIC, CHIP 0.022uF 10% 25V
C372	1-163-037-11	s	CERAMIC, CHIP 0.022uF 10% 25V
C373	1-126-391-11	s	ELECT, CHIP 47uF 20% 6.3V
C374	1-163-037-11	s	CERAMIC, CHIP 0.022uF 10% 25V
C375	1-163-037-11	s	CERAMIC, CHIP 0.022uF 10% 25V
C376	1-163-037-11	s	CERAMIC, CHIP 0.022uF 10% 25V
C377	1-126-391-11	s	ELECT, CHIP 47uF 20% 6.3V
C378	1-126-396-11	s	ELECT, CHIP 47uF 20% 16V
C379	1-163-037-11	s	CERAMIC, CHIP 0.022uF 10% 25V
C380	1-163-037-11	s	CERAMIC, CHIP 0.022uF 10% 25V
C381	1-163-227-11	s	CERAMIC, CHIP 10pF 5% 50V
C382	1-163-037-11	s	CERAMIC, CHIP 0.022uF 10% 25V
C383	1-163-227-11	s	CERAMIC, CHIP 10pF 5% 50V
C384	1-163-037-11	s	CERAMIC, CHIP 0.022uF 10% 25V
C385	1-163-038-91	s	CERAMIC, CHIP 0.1uF 25V
C386	1-163-038-91	s	CERAMIC, CHIP 0.1uF 25V
C387	1-163-037-11	s	CERAMIC, CHIP 0.022uF 10% 25V
C388	1-163-243-11	s	CERAMIC, CHIP 47pF 5% 50V *3)
	1-163-113-00	s	CERAMIC, CHIP 68pF 5% 50V *4)
C501	1-163-235-11	s	CERAMIC, CHIP 22pF 5% 50V
C502	1-163-038-91	s	CERAMIC, CHIP 0.1uF 25V
C503	1-126-394-11	s	ELECT, CHIP 10uF 20% 16V
C504	1-126-394-11	s	ELECT, CHIP 10uF 20% 16V
C505	1-126-394-11	s	ELECT, CHIP 10uF 20% 16V
C506	1-163-037-11	s	CERAMIC, CHIP 0.022uF 10% 25V
C507	1-126-396-11	s	ELECT, CHIP 47uF 20% 16V
C508	1-126-396-11	s	ELECT, CHIP 47uF 20% 16V
C509	1-126-394-11	s	ELECT, CHIP 10uF 20% 16V
C510	1-126-394-11	s	ELECT, CHIP 10uF 20% 16V
C511	1-126-401-11	s	ELECT, CHIP 1uF 20% 50V
C512	1-163-235-11	s	CERAMIC, CHIP 22pF 5% 50V
C513	1-164-222-11	s	CERAMIC, CHIP 0.22uF 25V
C514	1-163-038-91	s	CERAMIC, CHIP 0.1uF 25V
C515	1-163-038-91	s	CERAMIC, CHIP 0.1uF 25V
C516	1-163-121-00	s	CERAMIC, CHIP 150pF 5% 50V
C517	1-164-232-11	s	CERAMIC, CHIP 0.01uF 10% 100V
C518	1-163-037-11	s	CERAMIC, CHIP 0.022uF 10% 25V
C519	1-163-038-91	s	CERAMIC, CHIP 0.1uF 25V
C520	1-163-038-91	s	CERAMIC, CHIP 0.1uF 25V
C521	1-126-396-11	s	ELECT, CHIP 47uF 20% 16V
C522	1-126-393-11	s	ELECT, CHIP 33uF 20% 10V
C523	1-163-038-91	s	CERAMIC, CHIP 0.1uF 25V
C524	1-163-239-11	s	CERAMIC, CHIP 33pF 5% 50V
C525	1-163-259-91	s	CERAMIC, CHIP 220pF 5% 50V
C526	1-163-038-91	s	CERAMIC, CHIP 0.1uF 25V
C527	1-163-037-11	s	CERAMIC, CHIP 0.022uF 10% 25V

(IO-149 BOARD(For NTSC); Suffix -11)

Ref. No. or Q'ty	Part No.	SP	Description
C528	1-163-038-91	s	CERAMIC, CHIP 0.1uF 25V
C529	1-163-037-11	s	CERAMIC, CHIP 0.022uF 10% 25V
C530	1-163-038-91	s	CERAMIC, CHIP 0.1uF 25V
C531	1-163-038-91	s	CERAMIC, CHIP 0.1uF 25V
C532	1-163-038-91	s	CERAMIC, CHIP 0.1uF 25V
C533	1-163-038-91	s	CERAMIC, CHIP 0.1uF 25V
C534	1-126-391-11	s	ELECT, CHIP 47uF 20% 6.3V
C535	1-163-038-91	s	CERAMIC, CHIP 0.1uF 25V
C536	1-163-038-91	s	CERAMIC, CHIP 0.1uF 25V
C537	1-163-989-11	s	CERAMIC, CHIP 0.033uF 10% 25V
C538	1-163-121-00	s	CERAMIC, CHIP 150pF 5% 50V
C539	1-163-038-91	s	CERAMIC, CHIP 0.1uF 25V
C540	1-163-038-91	s	CERAMIC, CHIP 0.1uF 25V
C541	1-163-038-91	s	CERAMIC, CHIP 0.1uF 25V
C543	1-126-391-11	s	ELECT, CHIP 47uF 20% 6.3V
C544	1-126-391-11	s	ELECT, CHIP 47uF 20% 6.3V
C545	1-163-038-91	s	CERAMIC, CHIP 0.1uF 25V
C546	1-163-239-11	s	CERAMIC, CHIP 33pF 5% 50V
C547	1-163-037-11	s	CERAMIC, CHIP 0.022uF 10% 25V
C548	1-163-038-91	s	CERAMIC, CHIP 0.1uF 25V
C549	1-126-391-11	s	ELECT, CHIP 47uF 20% 6.3V
C550	1-163-251-11	s	CERAMIC, CHIP 100pF 5% 50V
C551	1-163-037-11	s	CERAMIC, CHIP 0.022uF 10% 25V
C553	1-124-589-11	s	ELECT, CHIP 47uF 20% 16V
C601	1-163-037-11	s	CERAMIC, CHIP 0.022uF 10% 25V
C602	1-163-037-11	s	CERAMIC, CHIP 0.022uF 10% 25V
C603	1-163-037-11	s	CERAMIC, CHIP 0.022uF 10% 25V
C604	1-163-275-11	s	CERAMIC, CHIP 0.001uF 5% 50V
C605	1-126-401-11	s	ELECT, CHIP 1uF 20% 50V
C606	1-126-404-11	s	ELECT, CHIP 4.7uF 20% 50V
C607	1-164-232-11	s	CERAMIC, CHIP 0.01uF 10% 100V
C608	1-163-037-11	s	CERAMIC, CHIP 0.022uF 10% 25V
C609	1-163-037-11	s	CERAMIC, CHIP 0.022uF 10% 25V
C610	1-163-259-91	s	CERAMIC, CHIP 220pF 5% 50V
C611	1-163-037-11	s	CERAMIC, CHIP 0.022uF 10% 25V
C612	1-163-227-11	s	CERAMIC, CHIP 10pF 5% 50V
C613	1-163-239-11	s	CERAMIC, CHIP 33pF 5% 50V
C614	1-163-243-11	s	CERAMIC, CHIP 47pF 5% 50V
C615	1-163-113-00	s	CERAMIC, CHIP 68pF 5% 50V
C616	1-164-232-11	s	CERAMIC, CHIP 0.01uF 10% 100V
C617	1-163-121-00	s	CERAMIC, CHIP 150pF 5% 50V
C618	1-164-232-11	s	CERAMIC, CHIP 0.01uF 10% 100V
C619	1-163-263-11	s	CERAMIC, CHIP 330pF 5% 50V
C620	1-163-809-11	s	CERAMIC, CHIP 0.047uF 10% 25V
C621	1-163-809-11	s	CERAMIC, CHIP 0.047uF 10% 25V
C622	1-163-038-91	s	CERAMIC, CHIP 0.1uF 25V
C623	1-163-038-91	s	CERAMIC, CHIP 0.1uF 25V
C624	1-163-038-91	s	CERAMIC, CHIP 0.1uF 25V
C625	1-163-037-11	s	CERAMIC, CHIP 0.022uF 10% 25V
C626	1-163-227-11	s	CERAMIC, CHIP 10pF 5% 50V
C627	1-126-391-11	s	ELECT, CHIP 47uF 20% 6.3V
C628	1-163-037-11	s	CERAMIC, CHIP 0.022uF 10% 25V
C629	1-126-391-11	s	ELECT, CHIP 47uF 20% 6.3V
C631	1-163-227-11	s	CERAMIC, CHIP 10pF 5% 50V
C632	1-126-401-11	s	ELECT, CHIP 1uF 20% 50V
C633	1-163-037-11	s	CERAMIC, CHIP 0.022uF 10% 25V
C634	1-163-243-11	s	CERAMIC, CHIP 47pF 5% 50V
C635	1-163-037-11	s	CERAMIC, CHIP 0.022uF 10% 25V
C636	1-163-037-11	s	CERAMIC, CHIP 0.022uF 10% 25V

(IO-149 BOARD(For NTSC); Suffix -11)

Ref. No. or Q'ty	Part No.	SP	Description
C637	1-163-037-11	s	CERAMIC, CHIP 0.022uF 10% 25V
C638	1-163-038-91	s	CERAMIC, CHIP 0.1uF 25V
C639	1-163-235-11	s	CERAMIC, CHIP 22pF 5% 50V
C640	1-163-037-11	s	CERAMIC, CHIP 0.022uF 10% 25V
C641	1-163-038-91	s	CERAMIC, CHIP 0.1uF 25V
C642	1-163-037-11	s	CERAMIC, CHIP 0.022uF 10% 25V
C643	1-163-243-11	s	CERAMIC, CHIP 47pF 5% 50V
C644	1-163-037-11	s	CERAMIC, CHIP 0.022uF 10% 25V
C645	1-126-393-11	s	ELECT, CHIP 33uF 20% 10V
C646	1-163-037-11	s	CERAMIC, CHIP 0.022uF 10% 25V
C647	1-163-037-11	s	CERAMIC, CHIP 0.022uF 10% 25V
C648	1-163-037-11	s	CERAMIC, CHIP 0.022uF 10% 25V
C649	1-163-037-11	s	CERAMIC, CHIP 0.022uF 10% 25V
C650	1-126-393-11	s	ELECT, CHIP 33uF 20% 10V
C651	1-163-037-11	s	CERAMIC, CHIP 0.022uF 10% 25V
C652	1-163-237-11	s	CERAMIC, CHIP 27pF 5% 50V
C653	1-163-237-11	s	CERAMIC, CHIP 27pF 5% 50V
C654	1-163-245-11	s	CERAMIC, CHIP 56pF 5% 50V
C655	1-163-245-11	s	CERAMIC, CHIP 56pF 5% 50V
C656	1-163-237-11	s	CERAMIC, CHIP 27pF 5% 50V
C657	1-163-237-11	s	CERAMIC, CHIP 27pF 5% 50V
C658	1-163-037-11	s	CERAMIC, CHIP 0.022uF 10% 25V
C659	1-163-037-11	s	CERAMIC, CHIP 0.022uF 10% 25V
C660	1-163-037-11	s	CERAMIC, CHIP 0.022uF 10% 25V
C661	1-163-037-11	s	CERAMIC, CHIP 0.022uF 10% 25V
C663	1-163-133-00	s	CERAMIC, CHIP 470pF 5% 50V
CT601	1-141-345-11	s	CAP, TRIMMER, CHIP 40pF
CT602	1-141-345-11	s	CAP, TRIMMER, CHIP 40pF
D1	8-719-941-04	s	DIODE SB007-03CP
D2	8-719-941-04	s	DIODE SB007-03CP
D3	8-719-053-18	s	DIODE 1SR154-400TE-25
D4	8-719-053-18	s	DIODE 1SR154-400TE-25
D5	8-719-053-18	s	DIODE 1SR154-400TE-25
D101	8-719-041-39	s	DIODE KV1470
D102	8-719-041-39	s	DIODE KV1470
D103	8-719-041-39	s	DIODE KV1470
D104	8-719-941-23	s	DIODE DA204U
D105	8-719-941-23	s	DIODE DA204U
D106	8-719-989-08	s	DIODE RB717F
D301	8-719-976-99	s	DIODE DTZ5.1B
D302	8-719-941-23	s	DIODE DA204U
D501	8-719-941-23	s	DIODE DA204U
D502	8-719-109-87	s	DIODE RD5.6ESB
D601	8-719-002-81	s	DIODE 1T363A-M20-T8A
D602	8-719-002-81	s	DIODE 1T363A-M20-T8A
E101	1-535-877-22	o	CHECKER, CHIP
E102	1-535-877-22	o	CHECKER, CHIP
E103	1-535-877-22	o	CHECKER, CHIP
E301	1-535-877-22	o	CHECKER, CHIP
E501	1-535-877-22	o	CHECKER, CHIP
E601	1-535-877-22	o	CHECKER, CHIP
F1	⚠ 1-576-124-11	s	LINK, IC, CHIP 1A
F2	⚠ 1-533-282-21	s	LINK, IC, CHIP 2A
F3	⚠ 1-576-124-11	s	LINK, IC, CHIP 1A
F4	⚠ 1-533-282-21	s	LINK, IC, CHIP 2A
F5	⚠ 1-576-124-11	s	LINK, IC, CHIP 1A

(IO-149 BOARD(For NTSC); Suffix -11)

Ref. No. or Q'ty	Part No.	SP	Description	
F6	⚠ 1-533-282-21	s	LINK, IC, CHIP 2A	
FL101	1-233-598-11	s	FILTER, LOW-PASS	
FL102	1-233-598-11	s	FILTER, LOW-PASS	
FL103	1-233-614-11	s	FILTER, LOW-PASS	
FL104	1-239-771-11	s	FILTER, LOW-PASS	
FL1001	1-239-719-11	s	FILTER, NOISE, CHIP	
FL1002	1-239-719-11	s	FILTER, NOISE, CHIP	
FL1003	1-239-719-11	s	FILTER, NOISE, CHIP	
IC1	8-759-157-17	s	IC PQ05SZ1U	
IC2	8-759-157-17	s	IC PQ05SZ1U	
IC3	8-759-172-40	s	IC L78M09T-FA	
IC4	8-759-172-40	s	IC L78M09T-FA	
IC5	8-759-822-95	s	IC L79M05T-FA	
IC6	8-759-822-95	s	IC L79M05T-FA	
IC7	8-759-822-95	s	IC L79M05T-FA	
IC8	8-759-157-17	s	IC PQ05SZ1U	
IC101	8-759-198-63	s	IC S-81230SG-QB-T1	
IC102	8-759-278-58	s	IC NJM4558V-TE2	
IC103	8-759-278-58	s	IC NJM4558V-TE2	
IC105	8-759-278-58	s	IC NJM4558V-TE2	
IC106	8-759-082-61	s	IC TC4W53FU	
IC107	8-759-076-06	s	IC TL064CPW	
IC108	8-759-076-06	s	IC TL064CPW	
IC109	8-752-052-77	s	IC CXA1450M	
IC110	8-752-363-60	s	IC CXD2307R-T6	
IC111	8-759-076-06	s	IC TL064CPW	*1)
	8-759-287-54	s	IC TL084CPW-E20	*2)
IC112	8-759-076-06	s	IC TL064CPW	*1)
	8-759-287-54	s	IC TL084CPW-E20	*2)
IC113	8-759-076-06	s	IC TL064CPW	*1)
	8-759-287-54	s	IC TL084CPW-E20	*2)
IC114	8-759-066-59	s	IC TC74HC4053AFS	
IC115	8-752-054-80	s	IC CXA1521M	
IC116	8-752-054-80	s	IC CXA1521M	
IC117	8-759-906-59	s	IC CX22017	
IC118	8-759-907-81	s	IC SN74LS221NS	
IC301	8-759-082-59	s	IC TC7W32FU	
IC302	8-759-082-61	s	IC TC4W53FU	
IC303	8-759-262-03	s	IC MC14577CF	
IC304	8-759-076-06	s	IC TL064CPW	*1)
	8-759-287-54	s	IC TL084CPW-E20	*2)
IC305	8-759-082-61	s	IC TC4W53FU	
IC306	8-752-052-73	s	IC CXA1451M	
IC307	8-752-052-73	s	IC CXA1451M	
IC308	8-759-262-00	s	IC MC14576CF	
IC309	8-752-052-73	s	IC CXA1451M	
IC310	8-752-052-73	s	IC CXA1451M	
IC311	8-752-052-73	s	IC CXA1451M	
IC312	8-759-082-61	s	IC TC4W53FU	
IC501	8-759-082-57	s	IC TC7W04FU	
IC502	8-752-052-77	s	IC CXA1450M	
IC503	8-752-052-77	s	IC CXA1450M	
IC504	8-759-173-16	s	IC TL062CPW	

(IO-149 BOARD(For NTSC); Suffix -11)

Ref. No. or Q'ty	Part No.	SP	Description
IC505	8-759-076-06	s	IC TL064CPW
IC506	8-759-430-88	s	IC TC74HC4051AFS(EL)
IC507	8-759-324-03	s	IC HA17431UA-TL
IC508	8-759-076-06	s	IC TL064CPW
IC509	8-752-052-77	s	IC CXA1450M
IC510	8-752-052-73	s	IC CXA1451M
IC512	8-759-987-27	s	IC LM1881MX
IC513	8-759-079-66	s	IC TC74VHC123AFS(EL)
IC514	8-759-980-04	s	IC LM311PS
IC515	8-759-702-08	s	IC NJM360M
IC601	8-759-082-57	s	IC TC7W04FU
IC602	8-759-250-81	s	IC TC5081AP
IC603	8-759-079-67	s	IC TC74VHC125FS(EL)
IC604	8-759-058-57	s	IC TC7S04FU-TE85L
IC605	8-759-357-24	s	IC MC68HC705C8AFU
IC606	8-752-335-47	s	IC CXD1216M
IC607	8-759-066-59	s	IC TC74HC4053AFS
IC608	8-759-241-03	s	IC TC74HC191AF
IC609	8-759-082-57	s	IC TC7W04FU
IC610	8-759-271-86	s	IC TC7SH04FU
IC611	8-759-271-86	s	IC TC7SH04FU
IC612	8-759-079-66	s	IC TC74VHC123AFS(EL)
IC613	8-759-079-80	s	IC TC74VHC175FS(EL)
IC614	8-759-519-49	s	IC CXD8165Q
IC615	8-752-339-46	s	IC CXD1177Q
IC616	8-759-082-57	s	IC TC7W04FU
IC617	8-759-066-59	s	IC TC74HC4053AFS
IC618	8-759-271-86	s	IC TC7SH04FU
IC619	8-759-271-86	s	IC TC7SH04FU
L101	1-414-402-11	s	INDUCTOR, CHIP 47uH
L102	1-414-400-11	s	INDUCTOR, CHIP 22uH
L103	1-414-400-11	s	INDUCTOR, CHIP 22uH
L104	1-414-402-11	s	INDUCTOR, CHIP 47uH
L105	1-414-402-11	s	INDUCTOR, CHIP 47uH
L106	1-414-400-11	s	INDUCTOR, CHIP 22uH
L107	1-414-400-11	s	INDUCTOR, CHIP 22uH
L108	1-414-402-11	s	INDUCTOR, CHIP 47uH
L109	1-414-402-11	s	INDUCTOR, CHIP 47uH
L110	1-414-402-11	s	INDUCTOR, CHIP 47uH
L111	1-414-402-11	s	INDUCTOR, CHIP 47uH
L112	1-414-404-11	s	INDUCTOR, CHIP 100uH
L113	1-414-402-11	s	INDUCTOR, CHIP 47uH
L114	1-414-404-11	s	INDUCTOR, CHIP 100uH
L115	1-410-385-11	s	INDUCTOR, CHIP 22uH
L117	1-410-393-11	s	INDUCTOR, CHIP 100uH
L301	1-414-402-11	s	INDUCTOR, CHIP 47uH
L302	1-414-402-11	s	INDUCTOR, CHIP 47uH
L303	1-414-402-11	s	INDUCTOR, CHIP 47uH
L304	1-414-402-11	s	INDUCTOR, CHIP 47uH
L305	1-410-391-11	s	INDUCTOR, CHIP 68uH
L306	1-410-391-11	s	INDUCTOR, CHIP 68uH
L307	1-414-402-11	s	INDUCTOR, CHIP 47uH
L308	1-414-402-11	s	INDUCTOR, CHIP 47uH
L309	1-414-402-11	s	INDUCTOR, CHIP 47uH
L310	1-410-387-11	s	INDUCTOR, CHIP 33uH
L311	1-410-387-11	s	INDUCTOR, CHIP 33uH
L312	1-414-402-11	s	INDUCTOR, CHIP 47uH
L313	1-414-402-11	s	INDUCTOR, CHIP 47uH
L314	1-410-389-31	s	INDUCTOR, CHIP 47uH

(IO-149 BOARD(For NTSC); Suffix -11)

Ref. No. or Q'ty	Part No.	SP	Description
L315	1-410-387-11	s	INDUCTOR, CHIP 33uH
L501	1-410-390-11	s	INDUCTOR, CHIP 56uH
L502	1-410-393-11	s	INDUCTOR, CHIP 100uH
L503	1-414-402-11	s	INDUCTOR, CHIP 47uH
L504	1-414-402-11	s	INDUCTOR, CHIP 47uH
L505	1-410-391-11	s	INDUCTOR, CHIP 68uH
L506	1-414-402-11	s	INDUCTOR, CHIP 47uH
L507	1-414-402-11	s	INDUCTOR, CHIP 47uH
L601	1-414-402-11	s	INDUCTOR, CHIP 47uH
L602	1-414-402-11	s	INDUCTOR, CHIP 47uH
L603	1-414-400-11	s	INDUCTOR, CHIP 22uH
L604	1-414-400-11	s	INDUCTOR, CHIP 22uH
L605	1-410-389-31	s	INDUCTOR, CHIP 47uH
L606	1-410-389-31	s	INDUCTOR, CHIP 47uH
L607	1-410-389-31	s	INDUCTOR, CHIP 47uH
L608	1-410-389-31	s	INDUCTOR, CHIP 47uH
Q101	8-729-117-32	s	TRANSISTOR 2SC4177
Q102	8-729-117-32	s	TRANSISTOR 2SC4177
Q103	8-729-117-32	s	TRANSISTOR 2SC4177
Q104	8-729-140-63	s	TRANSISTOR 2SA1611-M5M6
Q105	8-729-117-32	s	TRANSISTOR 2SC4177
Q106	8-729-117-32	s	TRANSISTOR 2SC4177
Q107	8-729-117-32	s	TRANSISTOR 2SC4177
Q108	8-729-923-06	s	TRANSISTOR FMW-8
Q109	8-729-923-06	s	TRANSISTOR FMW-8
Q110	8-729-923-06	s	TRANSISTOR FMW-8
Q111	8-729-904-04	s	TRANSISTOR FMS2
Q112	8-729-904-04	s	TRANSISTOR FMS2
Q113	8-729-904-04	s	TRANSISTOR FMS2
Q114	8-729-903-82	s	TRANSISTOR FMW2
Q115	8-729-903-82	s	TRANSISTOR FMW2
Q116	8-729-903-82	s	TRANSISTOR FMW2
Q117	8-729-931-46	s	TRANSISTOR FMW7
Q118	8-729-931-46	s	TRANSISTOR FMW7
Q119	8-729-931-46	s	TRANSISTOR FMW7
Q120	8-729-907-26	s	TRANSISTOR IMX1
Q121	8-729-907-26	s	TRANSISTOR IMX1
Q122	8-729-907-26	s	TRANSISTOR IMX1
Q123	8-729-143-14	s	TRANSISTOR 2SC4176-B35
Q124	8-729-117-32	s	TRANSISTOR 2SC4177
Q125	8-729-140-63	s	TRANSISTOR 2SA1611-M5M6
Q126	8-729-117-32	s	TRANSISTOR 2SC4177
Q127	8-729-143-14	s	TRANSISTOR 2SC4176-B35
Q128	8-729-140-63	s	TRANSISTOR 2SA1611-M5M6
Q129	8-729-903-82	s	TRANSISTOR FMW2
Q130	8-729-117-32	s	TRANSISTOR 2SC4177
Q131	8-729-903-82	s	TRANSISTOR FMW2
Q301	8-729-143-14	s	TRANSISTOR 2SC4176-B35
Q302	8-729-904-41	s	TRANSISTOR FMY3
Q303	8-729-140-63	s	TRANSISTOR 2SA1611-M5M6
Q304	8-729-140-63	s	TRANSISTOR 2SA1611-M5M6
Q305	8-729-117-32	s	TRANSISTOR 2SC4177
Q306	8-729-117-32	s	TRANSISTOR 2SC4177
Q307	8-729-907-26	s	TRANSISTOR IMX1
Q308	8-729-117-32	s	TRANSISTOR 2SC4177
Q309	8-729-117-32	s	TRANSISTOR 2SC4177
Q310	8-729-143-14	s	TRANSISTOR 2SC4176-B35
Q311	8-729-117-32	s	TRANSISTOR 2SC4177

(IO-149 BOARD(For NTSC); Suffix -11)

Ref. No. or Q'ty	Part No.	SP	Description
Q312	8-729-907-26	s	TRANSISTOR IMX1
Q313	8-729-140-63	s	TRANSISTOR 2SA1611-M5M6
Q314	8-729-140-63	s	TRANSISTOR 2SA1611-M5M6
Q315	8-729-117-32	s	TRANSISTOR 2SC4177
Q316	8-729-140-63	s	TRANSISTOR 2SA1611-M5M6
Q317	8-729-117-32	s	TRANSISTOR 2SC4177
Q318	8-729-904-41	s	TRANSISTOR FMY3
Q319	8-729-904-41	s	TRANSISTOR FMY3
Q320	8-729-117-32	s	TRANSISTOR 2SC4177
Q321	8-729-117-32	s	TRANSISTOR 2SC4177
Q322	8-729-117-32	s	TRANSISTOR 2SC4177
Q323	8-729-143-14	s	TRANSISTOR 2SC4176-B35
Q324	8-729-140-63	s	TRANSISTOR 2SA1611-M5M6
Q325	8-729-140-63	s	TRANSISTOR 2SA1611-M5M6
Q326	8-729-117-32	s	TRANSISTOR 2SC4177
Q327	8-729-117-32	s	TRANSISTOR 2SC4177
Q328	8-729-117-32	s	TRANSISTOR 2SC4177
Q329	8-729-117-32	s	TRANSISTOR 2SC4177
Q330	8-729-117-32	s	TRANSISTOR 2SC4177
Q331	8-729-904-41	s	TRANSISTOR FMY3
Q332	8-729-422-44	s	TRANSISTOR 2SK663
Q333	8-729-422-44	s	TRANSISTOR 2SK663
Q334	8-729-422-44	s	TRANSISTOR 2SK663
Q335	8-729-422-44	s	TRANSISTOR 2SK663
Q336	8-729-140-63	s	TRANSISTOR 2SA1611-M5M6
Q337	8-729-140-63	s	TRANSISTOR 2SA1611-M5M6
Q338	8-729-140-63	s	TRANSISTOR 2SA1611-M5M6
Q339	8-729-140-63	s	TRANSISTOR 2SA1611-M5M6
Q340	8-729-117-32	s	TRANSISTOR 2SC4177
Q341	8-729-907-26	s	TRANSISTOR IMX1
Q342	8-729-907-26	s	TRANSISTOR IMX1
Q343	8-729-117-32	s	TRANSISTOR 2SC4177
Q344	8-729-117-32	s	TRANSISTOR 2SC4177
Q345	8-729-907-26	s	TRANSISTOR IMX1
Q346	8-729-117-32	s	TRANSISTOR 2SC4177
Q347	8-729-907-26	s	TRANSISTOR IMX1
Q348	8-729-117-32	s	TRANSISTOR 2SC4177
Q349	8-729-140-63	s	TRANSISTOR 2SA1611-M5M6
Q350	8-729-140-63	s	TRANSISTOR 2SA1611-M5M6
Q501	8-729-117-32	s	TRANSISTOR 2SC4177
Q502	8-729-117-32	s	TRANSISTOR 2SC4177
Q503	8-729-117-32	s	TRANSISTOR 2SC4177
Q504	8-729-117-32	s	TRANSISTOR 2SC4177
Q505	8-729-117-32	s	TRANSISTOR 2SC4177
Q506	8-729-904-41	s	TRANSISTOR FMY3
Q507	8-729-117-32	s	TRANSISTOR 2SC4177
Q508	8-729-117-32	s	TRANSISTOR 2SC4177
Q509	8-729-117-32	s	TRANSISTOR 2SC4177
Q601	8-729-140-47	s	TRANSISTOR 2SC3735-B34
Q602	8-729-140-47	s	TRANSISTOR 2SC3735-B34
Q603	8-729-140-47	s	TRANSISTOR 2SC3735-B34
Q604	8-729-140-47	s	TRANSISTOR 2SC3735-B34
Q605	8-729-117-32	s	TRANSISTOR 2SC4177
Q606	8-729-117-32	s	TRANSISTOR 2SC4177
Q607	8-729-117-32	s	TRANSISTOR 2SC4177
Q608	8-729-117-32	s	TRANSISTOR 2SC4177
R101	1-216-672-11	s	METAL, CHIP 7.5k 0.5% 1/10W
R102	1-216-665-11	s	METAL, CHIP 3.9k 0.5% 1/10W

(IO-149 BOARD(For NTSC); Suffix -11)

Ref. No. or Q'ty	Part No.	SP	Description
R103	1-216-667-11	s	METAL, CHIP 4.7k 0.5% 1/10W
R104	1-216-675-11	s	METAL, CHIP 10k 0.5% 1/10W
R105	1-216-041-00	s	METAL, CHIP 470 5% 1/10W
R106	1-216-295-91	s	RES, CHIP 0
R107	1-216-652-11	s	METAL, CHIP 1.1k 0.5% 1/10W
R108	1-216-668-11	s	METAL, CHIP 5.1k 0.5% 1/10W
R110	1-216-295-91	s	RES, CHIP 0
R112	1-216-295-91	s	RES, CHIP 0
R113	1-216-668-11	s	METAL, CHIP 5.1k 0.5% 1/10W
R114	1-216-665-11	s	METAL, CHIP 3.9k 0.5% 1/10W
R115	1-216-663-11	s	METAL, CHIP 3.3k 0.5% 1/10W
R116	1-216-073-00	s	METAL, CHIP 10k 5% 1/10W
R117	1-216-655-11	s	METAL, CHIP 1.5k 0.5% 1/10W
R118	1-216-657-11	s	METAL, CHIP 1.8k 0.5% 1/10W
R119	1-216-675-11	s	METAL, CHIP 10k 0.5% 1/10W
R120	1-216-675-11	s	METAL, CHIP 10k 0.5% 1/10W
R121	1-216-073-00	s	METAL, CHIP 10k 5% 1/10W
R122	1-216-073-00	s	METAL, CHIP 10k 5% 1/10W
R123	1-216-085-00	s	METAL, CHIP 33k 5% 1/10W
R124	1-216-085-00	s	METAL, CHIP 33k 5% 1/10W
R125	1-216-121-91	s	METAL, CHIP 1M 5% 1/10W
R126	1-216-121-91	s	METAL, CHIP 1M 5% 1/10W
R127	1-216-085-00	s	METAL, CHIP 33k 5% 1/10W
R128	1-216-085-00	s	METAL, CHIP 33k 5% 1/10W
R129	1-216-121-91	s	METAL, CHIP 1M 5% 1/10W
R130	1-216-121-91	s	METAL, CHIP 1M 5% 1/10W
R131	1-216-033-00	s	METAL, CHIP 220 5% 1/10W
R132	1-216-033-00	s	METAL, CHIP 220 5% 1/10W
R133	1-216-053-00	s	METAL, CHIP 1.5k 5% 1/10W
R134	1-216-053-00	s	METAL, CHIP 1.5k 5% 1/10W
R135	1-216-675-11	s	METAL, CHIP 10k 0.5% 1/10W
R136	1-216-073-00	s	METAL, CHIP 10k 5% 1/10W
R137	1-216-081-00	s	METAL, CHIP 22k 5% 1/10W
R138	1-216-121-91	s	METAL, CHIP 1M 5% 1/10W
R139	1-216-085-00	s	METAL, CHIP 33k 5% 1/10W
R140	1-216-121-91	s	METAL, CHIP 1M 5% 1/10W
R141	1-216-033-00	s	METAL, CHIP 220 5% 1/10W
R142	1-216-065-00	s	METAL, CHIP 4.7k 5% 1/10W
R143	1-216-065-00	s	METAL, CHIP 4.7k 5% 1/10W
R144	1-216-677-11	s	METAL, CHIP 12k 0.5% 1/10W
R145	1-216-678-11	s	METAL, CHIP 13k 0.5% 1/10W
R146	1-216-678-11	s	METAL, CHIP 13k 0.5% 1/10W
R147	1-216-667-11	s	METAL, CHIP 4.7k 0.5% 1/10W
R148	1-216-678-11	s	METAL, CHIP 13k 0.5% 1/10W
R149	1-216-659-11	s	METAL, CHIP 2.2k 0.5% 1/10W
R150	1-216-673-11	s	METAL, CHIP 8.2k 0.5% 1/10W
R151	1-216-659-11	s	METAL, CHIP 2.2k 0.5% 1/10W
R152	1-216-661-11	s	METAL, CHIP 2.7k 0.5% 1/10W
R153	1-216-661-11	s	METAL, CHIP 2.7k 0.5% 1/10W
R154	1-216-085-00	s	METAL, CHIP 33k 5% 1/10W
R155	1-216-675-11	s	METAL, CHIP 10k 0.5% 1/10W
R156	1-216-675-11	s	METAL, CHIP 10k 0.5% 1/10W
R157	1-216-679-11	s	METAL, CHIP 15k 0.5% 1/10W
R158	1-216-679-11	s	METAL, CHIP 15k 0.5% 1/10W
R159	1-216-659-11	s	METAL, CHIP 2.2k 0.5% 1/10W
R160	1-216-679-11	s	METAL, CHIP 15k 0.5% 1/10W
R161	1-216-679-11	s	METAL, CHIP 15k 0.5% 1/10W
R162	1-216-661-11	s	METAL, CHIP 2.7k 0.5% 1/10W
R163	1-216-679-11	s	METAL, CHIP 15k 0.5% 1/10W

(IO-149 BOARD(For NTSC); Suffix -11)

Ref. No. or Q'ty	Part No.	SP	Description
R164	1-216-671-11	s	METAL, CHIP 6.8k 0.5% 1/10W
R165	1-216-671-11	s	METAL, CHIP 6.8k 0.5% 1/10W
R166	1-216-679-11	s	METAL, CHIP 15k 0.5% 1/10W
R167	1-216-663-11	s	METAL, CHIP 3.3k 0.5% 1/10W
R168	1-216-659-11	s	METAL, CHIP 2.2k 0.5% 1/10W
R169	1-216-081-00	s	METAL, CHIP 22k 5% 1/10W
R170	1-216-081-00	s	METAL, CHIP 22k 5% 1/10W
R171	1-216-081-00	s	METAL, CHIP 22k 5% 1/10W
R172	1-216-645-11	s	METAL, CHIP 560 0.5% 1/10W
R173	1-216-665-11	s	METAL, CHIP 3.9k 0.5% 1/10W
R174	1-216-665-11	s	METAL, CHIP 3.9k 0.5% 1/10W
R175	1-216-089-91	s	METAL, CHIP 47k 5% 1/10W
R176	1-216-667-11	s	METAL, CHIP 4.7k 0.5% 1/10W
R177	1-216-089-91	s	METAL, CHIP 47k 5% 1/10W
R178	1-216-089-91	s	METAL, CHIP 47k 5% 1/10W
R179	1-216-639-11	s	METAL, CHIP 330 0.5% 1/10W
R180	1-216-639-11	s	METAL, CHIP 330 0.5% 1/10W
R181	1-216-639-11	s	METAL, CHIP 330 0.5% 1/10W
R182	1-216-639-11	s	METAL, CHIP 330 0.5% 1/10W
R183	1-216-639-11	s	METAL, CHIP 330 0.5% 1/10W
R184	1-216-639-11	s	METAL, CHIP 330 0.5% 1/10W
R185	1-216-045-00	s	METAL, CHIP 680 5% 1/10W
R186	1-216-045-00	s	METAL, CHIP 680 5% 1/10W
R187	1-216-017-91	s	METAL, CHIP 47 5% 1/10W
R188	1-216-017-91	s	METAL, CHIP 47 5% 1/10W
R189	1-216-045-00	s	METAL, CHIP 680 5% 1/10W
R190	1-216-017-91	s	METAL, CHIP 47 5% 1/10W
R191	1-216-017-91	s	METAL, CHIP 47 5% 1/10W
R192	1-216-017-91	s	METAL, CHIP 47 5% 1/10W
R193	1-216-017-91	s	METAL, CHIP 47 5% 1/10W
R194	1-216-057-00	s	METAL, CHIP 2.2k 5% 1/10W
R195	1-216-057-00	s	METAL, CHIP 2.2k 5% 1/10W
R196	1-216-057-00	s	METAL, CHIP 2.2k 5% 1/10W
R197	1-216-049-91	s	METAL, CHIP 1k 5% 1/10W
R198	1-216-049-91	s	METAL, CHIP 1k 5% 1/10W
R199	1-216-049-91	s	METAL, CHIP 1k 5% 1/10W
R200	1-216-049-91	s	METAL, CHIP 1k 5% 1/10W
R201	1-216-049-91	s	METAL, CHIP 1k 5% 1/10W
R202	1-216-049-91	s	METAL, CHIP 1k 5% 1/10W
R203	1-216-057-00	s	METAL, CHIP 2.2k 5% 1/10W
R204	1-216-057-00	s	METAL, CHIP 2.2k 5% 1/10W
R205	1-216-057-00	s	METAL, CHIP 2.2k 5% 1/10W
R206	1-216-033-00	s	METAL, CHIP 220 5% 1/10W
R207	1-216-033-00	s	METAL, CHIP 220 5% 1/10W
R208	1-216-033-00	s	METAL, CHIP 220 5% 1/10W
R209	1-216-045-00	s	METAL, CHIP 680 5% 1/10W
R210	1-216-045-00	s	METAL, CHIP 680 5% 1/10W
R211	1-216-045-00	s	METAL, CHIP 680 5% 1/10W
R212	1-216-077-00	s	METAL, CHIP 15k 5% 1/10W
R213	1-216-077-00	s	METAL, CHIP 15k 5% 1/10W
R214	1-216-077-00	s	METAL, CHIP 15k 5% 1/10W
R215	1-216-027-00	s	METAL, CHIP 120 5% 1/10W
R216	1-216-027-00	s	METAL, CHIP 120 5% 1/10W
R217	1-216-027-00	s	METAL, CHIP 120 5% 1/10W
R218	1-216-045-00	s	METAL, CHIP 680 5% 1/10W
R219	1-216-045-00	s	METAL, CHIP 680 5% 1/10W
R220	1-216-295-91	s	RES, CHIP 0
R221	1-216-017-91	s	METAL, CHIP 47 5% 1/10W
R222	1-216-017-91	s	METAL, CHIP 47 5% 1/10W

(IO-149 BOARD(For NTSC); Suffix -11)

Ref. No. or Q'ty	Part No.	SP	Description
R223	1-216-017-91	s	METAL, CHIP 47 5% 1/10W
R224	1-216-651-11	s	METAL, CHIP 1k 0.5% 1/10W
R225	1-216-659-11	s	METAL, CHIP 2.2k 0.5% 1/10W
R226	1-216-651-11	s	METAL, CHIP 1k 0.5% 1/10W
R227	1-216-659-11	s	METAL, CHIP 2.2k 0.5% 1/10W
R228	1-216-049-91	s	METAL, CHIP 1k 5% 1/10W
R229	1-216-659-11	s	METAL, CHIP 2.2k 0.5% 1/10W
R230	1-216-651-11	s	METAL, CHIP 1k 0.5% 1/10W
R231	1-216-121-91	s	METAL, CHIP 1M 5% 1/10W
R232	1-216-049-91	s	METAL, CHIP 1k 5% 1/10W
R233	1-216-049-91	s	METAL, CHIP 1k 5% 1/10W
R234	1-216-121-91	s	METAL, CHIP 1M 5% 1/10W
R235	1-216-121-91	s	METAL, CHIP 1M 5% 1/10W
R236	1-216-049-91	s	METAL, CHIP 1k 5% 1/10W
R237	1-216-049-91	s	METAL, CHIP 1k 5% 1/10W
R238	1-216-049-91	s	METAL, CHIP 1k 5% 1/10W
R239	1-216-049-91	s	METAL, CHIP 1k 5% 1/10W
R240	1-216-049-91	s	METAL, CHIP 1k 5% 1/10W
R241	1-216-089-91	s	METAL, CHIP 47k 5% 1/10W
R242	1-216-049-91	s	METAL, CHIP 1k 5% 1/10W
R243	1-216-089-91	s	METAL, CHIP 47k 5% 1/10W
R244	1-216-073-00	s	METAL, CHIP 10k 5% 1/10W
R245	1-216-649-11	s	METAL, CHIP 820 0.5% 1/10W
R246	1-216-057-00	s	METAL, CHIP 2.2k 5% 1/10W
R247	1-216-651-11	s	METAL, CHIP 1k 0.5% 1/10W
R248	1-216-057-00	s	METAL, CHIP 2.2k 5% 1/10W
R249	1-216-643-11	s	METAL, CHIP 470 0.5% 1/10W
R250	1-216-639-11	s	METAL, CHIP 330 0.5% 1/10W
R251	1-216-643-11	s	METAL, CHIP 470 0.5% 1/10W
R252	1-216-677-11	s	METAL, CHIP 12k 0.5% 1/10W
R253	1-216-683-11	s	METAL, CHIP 22k 0.5% 1/10W
R254	1-216-681-11	s	METAL, CHIP 18k 0.5% 1/10W
R255	1-216-683-11	s	METAL, CHIP 22k 0.5% 1/10W
R256	1-216-097-91	s	METAL, CHIP 100k 5% 1/10W
R257	1-216-089-91	s	METAL, CHIP 47k 5% 1/10W
R258	1-216-295-91	s	RES, CHIP 0
R259	1-216-668-11	s	METAL, CHIP 5.1k 0.5% 1/10W
R260	1-216-073-00	s	METAL, CHIP 10k 5% 1/10W
R261	1-216-049-91	s	METAL, CHIP 1k 5% 1/10W
R262	1-216-687-11	s	METAL, CHIP 33k 0.5% 1/10W
R263	1-216-065-00	s	METAL, CHIP 4.7k 5% 1/10W
R264	1-216-065-00	s	METAL, CHIP 4.7k 5% 1/10W
R265	1-216-049-91	s	METAL, CHIP 1k 5% 1/10W
R266	1-216-049-91	s	METAL, CHIP 1k 5% 1/10W
R267	1-216-049-91	s	METAL, CHIP 1k 5% 1/10W
R268	1-216-049-91	s	METAL, CHIP 1k 5% 1/10W
R269	1-216-057-00	s	METAL, CHIP 2.2k 5% 1/10W
R270	1-216-647-11	s	METAL, CHIP 680 0.5% 1/10W
R271	1-216-081-00	s	METAL, CHIP 22k 5% 1/10W
R272	1-216-666-11	s	METAL, CHIP 4.3k 0.5% 1/10W
R274	1-216-661-11	s	METAL, CHIP 2.7k 0.5% 1/10W
R275	1-216-057-00	s	METAL, CHIP 2.2k 5% 1/10W
R276	1-216-049-91	s	METAL, CHIP 1k 5% 1/10W
R277	1-216-081-00	s	METAL, CHIP 22k 5% 1/10W
R278	1-216-025-91	s	METAL, CHIP 100 5% 1/10W
R279	1-216-017-91	s	METAL, CHIP 47 5% 1/10W
R280	1-216-657-11	s	METAL, CHIP 1.8k 0.5% 1/10W
R281	1-216-073-00	s	METAL, CHIP 10k 5% 1/10W
R301	1-216-065-00	s	METAL, CHIP 4.7k 5% 1/10W

(IO-149 BOARD(For NTSC); Suffix -11)

Ref. No. or Q'ty	Part No.	SP	Description
R302	1-216-025-91	s	METAL, CHIP 100 5% 1/10W
R303	1-216-065-00	s	METAL, CHIP 4.7k 5% 1/10W
R304	1-216-049-91	s	METAL, CHIP 1k 5% 1/10W
R305	1-216-049-91	s	METAL, CHIP 1k 5% 1/10W
R306	1-216-033-00	s	METAL, CHIP 220 5% 1/10W
R307	1-216-057-00	s	METAL, CHIP 2.2k 5% 1/10W
R308	1-216-057-00	s	METAL, CHIP 2.2k 5% 1/10W
R309	1-216-049-91	s	METAL, CHIP 1k 5% 1/10W
R310	1-216-049-91	s	METAL, CHIP 1k 5% 1/10W
R311	1-216-659-11	s	METAL, CHIP 2.2k 0.5% 1/10W
R312	1-216-627-11	s	METAL, CHIP 100 0.5% 1/10W
R313	1-216-295-91	s	RES, CHIP 0
R314	1-216-661-11	s	METAL, CHIP 2.7k 0.5% 1/10W
R315	1-216-065-00	s	METAL, CHIP 4.7k 5% 1/10W
R316	1-216-025-91	s	METAL, CHIP 100 5% 1/10W
R317	1-216-647-11	s	METAL, CHIP 680 0.5% 1/10W
R318	1-216-017-91	s	METAL, CHIP 47 5% 1/10W
R319	1-216-657-11	s	METAL, CHIP 1.8k 0.5% 1/10W
R320	1-216-065-00	s	METAL, CHIP 4.7k 5% 1/10W
R321	1-216-025-91	s	METAL, CHIP 100 5% 1/10W
R322	1-216-643-11	s	METAL, CHIP 470 0.5% 1/10W
R323	1-216-653-11	s	METAL, CHIP 1.2k 0.5% 1/10W
R324	1-216-643-11	s	METAL, CHIP 470 0.5% 1/10W
R325	1-216-643-11	s	METAL, CHIP 470 0.5% 1/10W
R326	1-216-647-11	s	METAL, CHIP 680 0.5% 1/10W
R327	1-216-065-00	s	METAL, CHIP 4.7k 5% 1/10W
R328	1-216-639-11	s	METAL, CHIP 330 0.5% 1/10W
R329	1-216-049-91	s	METAL, CHIP 1k 5% 1/10W
R330	1-216-033-00	s	METAL, CHIP 220 5% 1/10W
R331	1-216-049-91	s	METAL, CHIP 1k 5% 1/10W
R332	1-216-049-91	s	METAL, CHIP 1k 5% 1/10W
R333	1-216-049-91	s	METAL, CHIP 1k 5% 1/10W
R336	1-216-061-00	s	METAL, CHIP 3.3k 5% 1/10W
R337	1-216-683-11	s	METAL, CHIP 22k 0.5% 1/10W
R338	1-216-667-11	s	METAL, CHIP 4.7k 0.5% 1/10W
R339	1-216-049-91	s	METAL, CHIP 1k 5% 1/10W
R340	1-216-643-11	s	METAL, CHIP 470 0.5% 1/10W
R341	1-216-643-11	s	METAL, CHIP 470 0.5% 1/10W
R342	1-216-651-11	s	METAL, CHIP 1k 0.5% 1/10W
R343	1-216-053-00	s	METAL, CHIP 1.5k 5% 1/10W
R344	1-216-025-91	s	METAL, CHIP 100 5% 1/10W
R345	1-216-643-11	s	METAL, CHIP 470 0.5% 1/10W
R346	1-216-077-00	s	METAL, CHIP 15k 5% 1/10W
R347	1-216-057-00	s	METAL, CHIP 2.2k 5% 1/10W
R348	1-216-655-11	s	METAL, CHIP 1.5k 0.5% 1/10W
R349	1-216-025-91	s	METAL, CHIP 100 5% 1/10W
R350	1-216-643-11	s	METAL, CHIP 470 0.5% 1/10W
R351	1-216-057-00	s	METAL, CHIP 2.2k 5% 1/10W
R352	1-216-634-11	s	METAL, CHIP 200 0.5% 1/10W
R353	1-216-664-11	s	METAL, CHIP 3.6k 0.5% 1/10W
R354	1-216-057-00	s	METAL, CHIP 2.2k 5% 1/10W
R355	1-216-045-00	s	METAL, CHIP 680 5% 1/10W
R356	1-216-083-00	s	METAL, CHIP 27k 5% 1/10W
R357	1-216-655-11	s	METAL, CHIP 1.5k 0.5% 1/10W
R358	1-216-671-11	s	METAL, CHIP 6.8k 0.5% 1/10W
R359	1-216-057-00	s	METAL, CHIP 2.2k 5% 1/10W
R360	1-216-025-91	s	METAL, CHIP 100 5% 1/10W
R361	1-216-651-11	s	METAL, CHIP 1k 0.5% 1/10W
R362	1-216-025-91	s	METAL, CHIP 100 5% 1/10W

(IO-149 BOARD(For NTSC); Suffix -11)

Ref. No. or Q'ty	Part No.	SP	Description
R363	1-216-025-91	s	METAL, CHIP 100 5% 1/10W
R364	1-216-049-91	s	METAL, CHIP 1k 5% 1/10W
R365	1-216-025-91	s	METAL, CHIP 100 5% 1/10W
R366	1-216-651-11	s	METAL, CHIP 1k 0.5% 1/10W
R367	1-216-653-11	s	METAL, CHIP 1.2k 0.5% 1/10W
R368	1-216-049-91	s	METAL, CHIP 1k 5% 1/10W
R369	1-216-049-91	s	METAL, CHIP 1k 5% 1/10W
R370	1-216-651-11	s	METAL, CHIP 1k 0.5% 1/10W
R371	1-216-057-00	s	METAL, CHIP 2.2k 5% 1/10W
R372	1-216-049-91	s	METAL, CHIP 1k 5% 1/10W
R373	1-216-049-91	s	METAL, CHIP 1k 5% 1/10W
R374	1-216-653-11	s	METAL, CHIP 1.2k 0.5% 1/10W
R375	1-216-653-11	s	METAL, CHIP 1.2k 0.5% 1/10W
R376	1-216-049-91	s	METAL, CHIP 1k 5% 1/10W
R377	1-216-049-91	s	METAL, CHIP 1k 5% 1/10W
R378	1-216-065-00	s	METAL, CHIP 4.7k 5% 1/10W
R379	1-216-025-91	s	METAL, CHIP 100 5% 1/10W
R380	1-216-065-00	s	METAL, CHIP 4.7k 5% 1/10W
R381	1-216-025-91	s	METAL, CHIP 100 5% 1/10W
R382	1-216-053-00	s	METAL, CHIP 1.5k 5% 1/10W
R383	1-216-049-91	s	METAL, CHIP 1k 5% 1/10W
R384	1-216-049-91	s	METAL, CHIP 1k 5% 1/10W
R385	1-216-049-91	s	METAL, CHIP 1k 5% 1/10W
R386	1-216-049-91	s	METAL, CHIP 1k 5% 1/10W
R387	1-216-049-91	s	METAL, CHIP 1k 5% 1/10W
R388	1-216-049-91	s	METAL, CHIP 1k 5% 1/10W
R389	1-216-639-11	s	METAL, CHIP 330 0.5% 1/10W
R390	1-216-639-11	s	METAL, CHIP 330 0.5% 1/10W
R391	1-216-057-00	s	METAL, CHIP 2.2k 5% 1/10W
R392	1-216-041-00	s	METAL, CHIP 470 5% 1/10W
R393	1-216-057-00	s	METAL, CHIP 2.2k 5% 1/10W
R394	1-216-025-91	s	METAL, CHIP 100 5% 1/10W
R395	1-216-025-91	s	METAL, CHIP 100 5% 1/10W
R396	1-216-025-91	s	METAL, CHIP 100 5% 1/10W
R397	1-216-025-91	s	METAL, CHIP 100 5% 1/10W
R398	1-216-055-00	s	METAL, CHIP 1.8k 5% 1/10W
R399	1-216-065-00	s	METAL, CHIP 4.7k 5% 1/10W
R400	1-216-065-00	s	METAL, CHIP 4.7k 5% 1/10W
R401	1-216-065-00	s	METAL, CHIP 4.7k 5% 1/10W
R402	1-216-065-00	s	METAL, CHIP 4.7k 5% 1/10W
R403	1-216-669-11	s	METAL, CHIP 5.6k 0.5% 1/10W
R404	1-216-659-11	s	METAL, CHIP 2.2k 0.5% 1/10W
R405	1-216-113-00	s	METAL, CHIP 470k 5% 1/10W
R406	1-216-049-91	s	METAL, CHIP 1k 5% 1/10W
R407	1-216-049-91	s	METAL, CHIP 1k 5% 1/10W
R408	1-216-049-91	s	METAL, CHIP 1k 5% 1/10W
R409	1-216-057-00	s	METAL, CHIP 2.2k 5% 1/10W
R410	1-216-669-11	s	METAL, CHIP 5.6k 0.5% 1/10W
R411	1-216-659-11	s	METAL, CHIP 2.2k 0.5% 1/10W
R412	1-216-055-00	s	METAL, CHIP 1.8k 5% 1/10W
R413	1-216-057-00	s	METAL, CHIP 2.2k 5% 1/10W
R414	1-216-017-91	s	METAL, CHIP 47 5% 1/10W
R415	1-216-017-91	s	METAL, CHIP 47 5% 1/10W
R416	1-216-073-00	s	METAL, CHIP 10k 5% 1/10W
R417	1-216-643-11	s	METAL, CHIP 470 0.5% 1/10W
R418	1-216-643-11	s	METAL, CHIP 470 0.5% 1/10W
R419	1-216-653-11	s	METAL, CHIP 1.2k 0.5% 1/10W
R420	1-216-643-11	s	METAL, CHIP 470 0.5% 1/10W
R421	1-216-041-00	s	METAL, CHIP 470 5% 1/10W

(IO-149 BOARD(For NTSC); Suffix -11)

Ref. No. or Q'ty	Part No.	SP	Description
R422	1-216-653-11	s	METAL, CHIP 1.2k 0.5% 1/10W
R423	1-216-643-11	s	METAL, CHIP 470 0.5% 1/10W
R424	1-216-643-11	s	METAL, CHIP 470 0.5% 1/10W
R425	1-216-663-11	s	METAL, CHIP 3.3k 0.5% 1/10W
R426	1-216-663-11	s	METAL, CHIP 3.3k 0.5% 1/10W
R427	1-216-053-00	s	METAL, CHIP 1.5k 5% 1/10W
R428	1-216-651-11	s	METAL, CHIP 1k 0.5% 1/10W
R429	1-216-639-11	s	METAL, CHIP 330 0.5% 1/10W
R430	1-216-651-11	s	METAL, CHIP 1k 0.5% 1/10W
R431	1-216-639-11	s	METAL, CHIP 330 0.5% 1/10W
R432	1-216-065-00	s	METAL, CHIP 4.7k 5% 1/10W
R433	1-216-065-00	s	METAL, CHIP 4.7k 5% 1/10W
R434	1-216-651-11	s	METAL, CHIP 1k 0.5% 1/10W
R435	1-216-660-11	s	METAL, CHIP 2.4k 0.5% 1/10W
R436	1-216-049-91	s	METAL, CHIP 1k 5% 1/10W
R437	1-216-081-00	s	METAL, CHIP 22k 5% 1/10W
R438	1-216-653-11	s	METAL, CHIP 1.2k 0.5% 1/10W
R439	1-216-667-11	s	METAL, CHIP 4.7k 0.5% 1/10W
R440	1-216-651-11	s	METAL, CHIP 1k 0.5% 1/10W
R441	1-216-624-11	s	METAL, CHIP 75 0.5% 1/10W
R442	1-216-624-11	s	METAL, CHIP 75 0.5% 1/10W
R443	1-216-624-11	s	METAL, CHIP 75 0.5% 1/10W
R444	1-216-646-11	s	METAL, CHIP 620 0.5% 1/10W
R445	1-216-045-00	s	METAL, CHIP 680 5% 1/10W
R446	1-216-041-00	s	METAL, CHIP 470 5% 1/10W
R447	1-216-651-11	s	METAL, CHIP 1k 0.5% 1/10W
R448	1-216-041-00	s	METAL, CHIP 470 5% 1/10W
R449	1-216-660-11	s	METAL, CHIP 2.4k 0.5% 1/10W
R450	1-216-624-11	s	METAL, CHIP 75 0.5% 1/10W
R451	1-216-097-91	s	METAL, CHIP 100k 5% 1/10W
R452	1-216-073-00	s	METAL, CHIP 10k 5% 1/10W
R453	1-216-081-00	s	METAL, CHIP 22k 5% 1/10W
R454	1-216-095-00	s	METAL, CHIP 82k 5% 1/10W
R455	1-216-073-00	s	METAL, CHIP 10k 5% 1/10W
R456	1-216-624-11	s	METAL, CHIP 75 0.5% 1/10W
R457	1-216-624-11	s	METAL, CHIP 75 0.5% 1/10W
R458	1-216-675-11	s	METAL, CHIP 10k 0.5% 1/10W
R459	1-216-624-11	s	METAL, CHIP 75 0.5% 1/10W
R501	1-216-089-91	s	METAL, CHIP 47k 5% 1/10W
R502	1-216-683-11	s	METAL, CHIP 22k 0.5% 1/10W
R503	1-216-659-11	s	METAL, CHIP 2.2k 0.5% 1/10W
R504	1-216-675-11	s	METAL, CHIP 10k 0.5% 1/10W
R505	1-216-675-11	s	METAL, CHIP 10k 0.5% 1/10W
R506	1-216-659-11	s	METAL, CHIP 2.2k 0.5% 1/10W
R507	1-216-295-91	s	RES, CHIP 0
R508	1-216-073-00	s	METAL, CHIP 10k 5% 1/10W
R509	1-216-669-11	s	METAL, CHIP 5.6k 0.5% 1/10W
R510	1-216-675-11	s	METAL, CHIP 10k 0.5% 1/10W
R511	1-216-663-11	s	METAL, CHIP 3.3k 0.5% 1/10W
R512	1-216-671-11	s	METAL, CHIP 6.8k 0.5% 1/10W
R513	1-216-677-11	s	METAL, CHIP 12k 0.5% 1/10W
R515	1-216-057-00	s	METAL, CHIP 2.2k 5% 1/10W
R516	1-216-691-11	s	METAL, CHIP 47k 0.5% 1/10W
R517	1-216-677-11	s	METAL, CHIP 12k 0.5% 1/10W
R518	1-216-679-11	s	METAL, CHIP 15k 0.5% 1/10W
R519	1-216-671-11	s	METAL, CHIP 6.8k 0.5% 1/10W
R520	1-216-679-11	s	METAL, CHIP 15k 0.5% 1/10W
R521	1-216-089-91	s	METAL, CHIP 47k 5% 1/10W
R522	1-216-097-91	s	METAL, CHIP 100k 5% 1/10W

(IO-149 BOARD(For NTSC); Suffix -11)

Ref. No. or Q'ty	Part No.	SP	Description
R523	1-216-089-91	s	METAL, CHIP 47k 5% 1/10W
R524	1-216-675-11	s	METAL, CHIP 10k 0.5% 1/10W
R525	1-216-651-11	s	METAL, CHIP 1k 0.5% 1/10W
R526	1-216-675-11	s	METAL, CHIP 10k 0.5% 1/10W
R527	1-216-665-11	s	METAL, CHIP 3.9k 0.5% 1/10W
R528	1-216-677-11	s	METAL, CHIP 12k 0.5% 1/10W
R529	1-216-049-91	s	METAL, CHIP 1k 5% 1/10W
R530	1-216-065-00	s	METAL, CHIP 4.7k 5% 1/10W
R531	1-216-049-91	s	METAL, CHIP 1k 5% 1/10W
R532	1-216-049-91	s	METAL, CHIP 1k 5% 1/10W
R533	1-216-677-11	s	METAL, CHIP 12k 0.5% 1/10W
R534	1-216-051-00	s	METAL, CHIP 1.2k 5% 1/10W
R535	1-216-675-11	s	METAL, CHIP 10k 0.5% 1/10W
R536	1-216-059-00	s	METAL, CHIP 2.7k 5% 1/10W
R537	1-216-643-11	s	METAL, CHIP 470 0.5% 1/10W
R538	1-216-679-11	s	METAL, CHIP 15k 0.5% 1/10W
R539	1-216-049-91	s	METAL, CHIP 1k 5% 1/10W
R540	1-216-057-00	s	METAL, CHIP 2.2k 5% 1/10W
R541	1-216-651-11	s	METAL, CHIP 1k 0.5% 1/10W
R542	1-216-057-00	s	METAL, CHIP 2.2k 5% 1/10W
R543	1-216-073-00	s	METAL, CHIP 10k 5% 1/10W
R544	1-216-651-11	s	METAL, CHIP 1k 0.5% 1/10W
R545	1-216-683-11	s	METAL, CHIP 22k 0.5% 1/10W
R546	1-216-057-00	s	METAL, CHIP 2.2k 5% 1/10W
R547	1-216-017-91	s	METAL, CHIP 47 5% 1/10W
R548	1-216-683-11	s	METAL, CHIP 22k 0.5% 1/10W
R549	1-216-666-11	s	METAL, CHIP 4.3k 0.5% 1/10W
R550	1-216-655-11	s	METAL, CHIP 1.5k 0.5% 1/10W
R551	1-216-097-91	s	METAL, CHIP 100k 5% 1/10W
R552	1-216-059-00	s	METAL, CHIP 2.7k 5% 1/10W
R553	1-216-671-11	s	METAL, CHIP 6.8k 0.5% 1/10W
R554	1-216-655-11	s	METAL, CHIP 1.5k 0.5% 1/10W
R555	1-216-059-00	s	METAL, CHIP 2.7k 5% 1/10W
R556	1-216-073-00	s	METAL, CHIP 10k 5% 1/10W
R557	1-216-683-11	s	METAL, CHIP 22k 0.5% 1/10W
R558	1-216-017-91	s	METAL, CHIP 47 5% 1/10W
R559	1-216-687-11	s	METAL, CHIP 33k 0.5% 1/10W
R560	1-216-679-11	s	METAL, CHIP 15k 0.5% 1/10W
R561	1-216-683-11	s	METAL, CHIP 22k 0.5% 1/10W
R562	1-216-069-00	s	METAL, CHIP 6.8k 5% 1/10W
R563	1-216-687-11	s	METAL, CHIP 33k 0.5% 1/10W
R564	1-216-687-11	s	METAL, CHIP 33k 0.5% 1/10W
R565	1-216-047-91	s	METAL, CHIP 820 5% 1/10W
R566	1-216-049-91	s	METAL, CHIP 1k 5% 1/10W
R567	1-216-691-11	s	METAL, CHIP 47k 0.5% 1/10W
R568	1-216-025-91	s	METAL, CHIP 100 5% 1/10W
R569	1-216-041-00	s	METAL, CHIP 470 5% 1/10W
R570	1-216-669-11	s	METAL, CHIP 5.6k 0.5% 1/10W
R571	1-216-081-00	s	METAL, CHIP 22k 5% 1/10W
R572	1-216-049-91	s	METAL, CHIP 1k 5% 1/10W
R573	1-216-059-00	s	METAL, CHIP 2.7k 5% 1/10W
R574	1-216-681-11	s	METAL, CHIP 18k 0.5% 1/10W
R575	1-216-041-00	s	METAL, CHIP 470 5% 1/10W
R576	1-216-624-11	s	METAL, CHIP 75 0.5% 1/10W
R577	1-216-687-11	s	METAL, CHIP 33k 0.5% 1/10W
R579	1-218-772-11	s	METAL, CHIP 680k 0.5% 1/10W
R580	1-216-017-91	s	METAL, CHIP 47 5% 1/10W
R581	1-216-025-91	s	METAL, CHIP 100 5% 1/10W
R582	1-216-061-00	s	METAL, CHIP 3.3k 5% 1/10W

(IO-149 BOARD(For NTSC); Suffix -11)

Ref. No. or Q'ty	Part No.	SP	Description
R583	1-216-097-91	s	METAL, CHIP 100k 5% 1/10W
R584	1-216-017-91	s	METAL, CHIP 47 5% 1/10W
R585	1-216-049-91	s	METAL, CHIP 1k 5% 1/10W
R586	1-216-049-91	s	METAL, CHIP 1k 5% 1/10W
R587	1-216-049-91	s	METAL, CHIP 1k 5% 1/10W
R588	1-216-093-00	s	METAL, CHIP 68k 5% 1/10W
R589	1-216-049-91	s	METAL, CHIP 1k 5% 1/10W
R601	1-216-089-91	s	METAL, CHIP 47k 5% 1/10W
R602	1-216-097-91	s	METAL, CHIP 100k 5% 1/10W
R604	1-216-097-91	s	METAL, CHIP 100k 5% 1/10W
R606	1-216-073-00	s	METAL, CHIP 10k 5% 1/10W
R607	1-216-065-00	s	METAL, CHIP 4.7k 5% 1/10W
R608	1-216-017-91	s	METAL, CHIP 47 5% 1/10W
R609	1-216-295-91	s	RES, CHIP 0
R610	1-216-049-91	s	METAL, CHIP 1k 5% 1/10W
R612	1-216-085-00	s	METAL, CHIP 33k 5% 1/10W
R613	1-216-065-00	s	METAL, CHIP 4.7k 5% 1/10W
R614	1-216-073-00	s	METAL, CHIP 10k 5% 1/10W
R616	1-216-017-91	s	METAL, CHIP 47 5% 1/10W
R617	1-216-085-00	s	METAL, CHIP 33k 5% 1/10W
R618	1-216-085-00	s	METAL, CHIP 33k 5% 1/10W
R619	1-216-658-11	s	METAL, CHIP 2k 0.5% 1/10W
R620	1-216-051-00	s	METAL, CHIP 1.2k 5% 1/10W
R621	1-216-658-11	s	METAL, CHIP 2k 0.5% 1/10W
R622	1-216-051-00	s	METAL, CHIP 1.2k 5% 1/10W
R623	1-216-643-11	s	METAL, CHIP 470 0.5% 1/10W
R624	1-216-037-00	s	METAL, CHIP 330 5% 1/10W
R625	1-216-648-11	s	METAL, CHIP 750 0.5% 1/10W
R626	1-216-037-00	s	METAL, CHIP 330 5% 1/10W
R627	1-216-071-00	s	METAL, CHIP 8.2k 5% 1/10W
R628	1-216-686-11	s	METAL, CHIP 30k 0.5% 1/10W
R629	1-216-069-00	s	METAL, CHIP 6.8k 5% 1/10W
R630	1-216-686-11	s	METAL, CHIP 30k 0.5% 1/10W
R631	1-216-041-00	s	METAL, CHIP 470 5% 1/10W
R632	1-216-041-00	s	METAL, CHIP 470 5% 1/10W
R633	1-216-017-91	s	METAL, CHIP 47 5% 1/10W
R634	1-216-097-91	s	METAL, CHIP 100k 5% 1/10W
R635	1-216-667-11	s	METAL, CHIP 4.7k 0.5% 1/10W
R637	1-216-115-00	s	METAL, CHIP 560k 5% 1/10W
R638	1-216-641-11	s	METAL, CHIP 390 0.5% 1/10W
R639	1-216-017-91	s	METAL, CHIP 47 5% 1/10W
R640	1-216-667-11	s	METAL, CHIP 4.7k 0.5% 1/10W
R641	1-216-641-11	s	METAL, CHIP 390 0.5% 1/10W
R642	1-216-665-11	s	METAL, CHIP 3.9k 0.5% 1/10W
R643	1-216-677-11	s	METAL, CHIP 12k 0.5% 1/10W
R644	1-216-638-11	s	METAL, CHIP 300 0.5% 1/10W
R645	1-216-638-11	s	METAL, CHIP 300 0.5% 1/10W
R646	1-216-049-91	s	METAL, CHIP 1k 5% 1/10W
R647	1-216-049-91	s	METAL, CHIP 1k 5% 1/10W
R648	1-216-037-00	s	METAL, CHIP 330 5% 1/10W
R649	1-216-037-00	s	METAL, CHIP 330 5% 1/10W
R650	1-216-049-91	s	METAL, CHIP 1k 5% 1/10W
R651	1-216-049-91	s	METAL, CHIP 1k 5% 1/10W
R652	1-216-025-91	s	METAL, CHIP 100 5% 1/10W
R653	1-216-025-91	s	METAL, CHIP 100 5% 1/10W
R654	1-216-025-91	s	METAL, CHIP 100 5% 1/10W
R655	1-216-049-91	s	METAL, CHIP 1k 5% 1/10W
R656	1-216-049-91	s	METAL, CHIP 1k 5% 1/10W
R657	1-216-025-91	s	METAL, CHIP 100 5% 1/10W

(IO-149 BOARD(For NTSC); Suffix -11)

Ref. No. or Q'ty	Part No.	SP	Description
R658	1-216-025-91	s	METAL, CHIP 100 5% 1/10W
R659	1-216-049-91	s	METAL, CHIP 1k 5% 1/10W
R660	1-216-295-91	s	RES, CHIP 0
R661	1-216-295-91	s	RES, CHIP 0
RB101	1-239-999-11	s	RESISTOR BLOCK, CHIP 1k x 4
RB102	1-239-998-11	s	RESISTOR BLOCK, CHIP 100 x 4
RB103	1-233-237-11	s	RESISTOR BLOCK, CHIP 100k x 4
RB701	1-233-234-11	s	RESISTOR BLOCK, CHIP 2.2k x 4
RV101	1-237-034-11	s	RES, ADJ METAL 2k
RV102	1-237-034-11	s	RES, ADJ METAL 2k
RV103	1-237-034-11	s	RES, ADJ METAL 2k
RV104	1-237-034-11	s	RES, ADJ METAL 2k
RV105	1-237-035-11	s	RES, ADJ METAL 5k
RV106	1-237-035-11	s	RES, ADJ METAL 5k
RV107	1-237-036-11	s	RES, ADJ METAL 10k
RV108	1-237-038-11	s	RES, ADJ METAL 50k
RV109	1-237-038-11	s	RES, ADJ METAL 50k
RV110	1-237-035-11	s	RES, ADJ METAL 5k
RV111	1-237-035-11	s	RES, ADJ METAL 5k
RV112	1-237-034-11	s	RES, ADJ METAL 2k
RV301	1-237-033-11	s	RES, ADJ METAL 1k
RV302	1-237-034-11	s	RES, ADJ METAL 2k
RV303	1-237-032-11	s	RES, ADJ METAL 500
RV304	1-237-033-11	s	RES, ADJ METAL 1k
RV305	1-237-035-11	s	RES, ADJ METAL 5k
RV306	1-237-033-11	s	RES, ADJ METAL 1k
RV307	1-237-033-11	s	RES, ADJ METAL 1k
RV308	1-237-032-11	s	RES, ADJ METAL 500
RV309	1-237-034-11	s	RES, ADJ METAL 2k
RV310	1-237-034-11	s	RES, ADJ METAL 2k
RV311	1-237-032-11	s	RES, ADJ METAL 500
RV312	1-237-035-11	s	RES, ADJ METAL 5k
RV313	1-237-035-11	s	RES, ADJ METAL 5k
RV314	1-237-032-11	s	RES, ADJ METAL 500
RV315	1-237-032-11	s	RES, ADJ METAL 500
RV316	1-237-033-11	s	RES, ADJ METAL 1k
RV317	1-237-033-11	s	RES, ADJ METAL 1k
RV318	1-237-030-11	s	RES, ADJ METAL 100
RV319	1-237-030-11	s	RES, ADJ METAL 100
RV501	1-237-035-11	s	RES, ADJ METAL 5k
RV502	1-237-036-11	s	RES, ADJ METAL 10k
RV503	1-237-037-11	s	RES, ADJ METAL 20k
RV504	1-237-036-11	s	RES, ADJ METAL 10k
RV505	1-237-034-11	s	RES, ADJ METAL 2k
RV506	1-237-033-11	s	RES, ADJ METAL 1k
RV601	1-237-035-11	s	RES, ADJ METAL 5k
S601	1-571-275-31	s	SWITCH, SLIDE
TH101	1-809-352-11	s	THERMISTOR, CHIP 1.5k
TP101	1-535-877-22	o	CHECKER, CHIP
TP102	1-535-877-22	o	CHECKER, CHIP
TP103	1-535-877-22	o	CHECKER, CHIP
TP301	1-535-877-22	o	CHECKER, CHIP
TP302	1-535-877-22	o	CHECKER, CHIP
TP303	1-535-877-22	o	CHECKER, CHIP
TP304	1-535-877-22	o	CHECKER, CHIP
TP305	1-535-877-22	o	CHECKER, CHIP
TP306	1-535-877-22	o	CHECKER, CHIP

(IO-149 BOARD(For NTSC); Suffix -11)

Ref. No. or Q'ty	Part No.	SP	Description
TP307	1-535-877-22	o	CHECKER, CHIP
TP501	1-535-877-22	o	CHECKER, CHIP
TP502	1-535-877-22	o	CHECKER, CHIP
TP601	1-535-877-22	o	CHECKER, CHIP
TP602	1-535-877-22	o	CHECKER, CHIP
TP603	1-535-877-22	o	CHECKER, CHIP
TP604	1-535-877-22	o	CHECKER, CHIP
X101	1-767-260-11	s	CRYSTAL 13.50MHz
X102	1-767-260-11	s	CRYSTAL 13.50MHz
X103	1-767-260-11	s	CRYSTAL 13.50MHz
X601	1-760-626-11	s	CRYSTAL 27.00MHz
X602	1-527-722-00	s	CRYSTAL 14.31818MHz

IO-149 BOARD(For PAL); Suffix -14

Ref. No. or Q'ty	Part No.	SP	Description

This list corresponds to the board suffix number -14.

Ref. No. or Q'ty	Part No.	SP	Description
1pc	A-8312-962-A	s	MOUNTED CIRCUIT BOARD, IO-149C
1pc	7-621-759-45	s	+PSW, 2.6x6
1pc	3-179-085-01	s	LEVER (L), PRINTED CIRCUIT BOARD
1pc	3-179-084-01	s	LEVER (R), PRINTED CIRCUIT BOARD
C1	1-126-392-11	s	ELECT, CHIP 100uF 20% 6.3V
C2	1-163-038-91	s	CERAMIC, CHIP 0.1uF 25V
C3	1-126-392-11	s	ELECT, CHIP 100uF 20% 6.3V
C4	1-163-038-91	s	CERAMIC, CHIP 0.1uF 25V
C5	1-126-392-11	s	ELECT, CHIP 100uF 20% 6.3V
C6	1-163-038-91	s	CERAMIC, CHIP 0.1uF 25V
C11	1-126-396-11	s	ELECT, CHIP 47uF 20% 16V
C12	1-163-038-91	s	CERAMIC, CHIP 0.1uF 25V
C13	1-126-396-11	s	ELECT, CHIP 47uF 20% 16V
C14	1-163-038-91	s	CERAMIC, CHIP 0.1uF 25V
C15	1-126-396-11	s	ELECT, CHIP 47uF 20% 16V
C16	1-163-038-91	s	CERAMIC, CHIP 0.1uF 25V
C21	1-126-396-11	s	ELECT, CHIP 47uF 20% 16V
C22	1-163-038-91	s	CERAMIC, CHIP 0.1uF 25V
C23	1-126-396-11	s	ELECT, CHIP 47uF 20% 16V
C24	1-163-038-91	s	CERAMIC, CHIP 0.1uF 25V
C25	1-126-396-11	s	ELECT, CHIP 47uF 20% 16V
C26	1-163-038-91	s	CERAMIC, CHIP 0.1uF 25V
C31	1-126-396-11	s	ELECT, CHIP 47uF 20% 16V
C32	1-163-038-91	s	CERAMIC, CHIP 0.1uF 25V
C33	1-126-396-11	s	ELECT, CHIP 47uF 20% 16V
C34	1-163-038-91	s	CERAMIC, CHIP 0.1uF 25V
C35	1-126-396-11	s	ELECT, CHIP 47uF 20% 16V
C36	1-163-038-91	s	CERAMIC, CHIP 0.1uF 25V
C37	1-126-396-11	s	ELECT, CHIP 47uF 20% 16V
C38	1-163-038-91	s	CERAMIC, CHIP 0.1uF 25V
C39	1-126-396-11	s	ELECT, CHIP 47uF 20% 16V
C40	1-163-038-91	s	CERAMIC, CHIP 0.1uF 25V
C101	1-164-004-11	s	CERAMIC, CHIP 0.1uF 10% 25V
C102	1-163-037-11	s	CERAMIC, CHIP 0.022uF 10% 25V
C103	1-126-396-11	s	ELECT, CHIP 47uF 20% 16V
C104	1-163-037-11	s	CERAMIC, CHIP 0.022uF 10% 25V
C105	1-163-037-11	s	CERAMIC, CHIP 0.022uF 10% 25V
C106	1-163-037-11	s	CERAMIC, CHIP 0.022uF 10% 25V
C107	1-163-037-11	s	CERAMIC, CHIP 0.022uF 10% 25V
C108	1-163-235-11	s	CERAMIC, CHIP 22pF 5% 50V
C109	1-163-037-11	s	CERAMIC, CHIP 0.022uF 10% 25V
C110	1-164-004-11	s	CERAMIC, CHIP 0.1uF 10% 25V
C111	1-164-004-11	s	CERAMIC, CHIP 0.1uF 10% 25V
C112	1-163-275-11	s	CERAMIC, CHIP 0.001uF 5% 50V
C113	1-163-275-11	s	CERAMIC, CHIP 0.001uF 5% 50V
C114	1-164-004-11	s	CERAMIC, CHIP 0.1uF 10% 25V
C115	1-164-004-11	s	CERAMIC, CHIP 0.1uF 10% 25V
C116	1-163-275-11	s	CERAMIC, CHIP 0.001uF 5% 50V
C117	1-163-275-11	s	CERAMIC, CHIP 0.001uF 5% 50V
C118	1-163-237-11	s	CERAMIC, CHIP 27pF 5% 50V
C119	1-163-237-11	s	CERAMIC, CHIP 27pF 5% 50V
C120	1-163-037-11	s	CERAMIC, CHIP 0.022uF 10% 25V
C121	1-163-037-11	s	CERAMIC, CHIP 0.022uF 10% 25V
C122	1-163-037-11	s	CERAMIC, CHIP 0.022uF 10% 25V
C123	1-164-004-11	s	CERAMIC, CHIP 0.1uF 10% 25V
C124	1-163-037-11	s	CERAMIC, CHIP 0.022uF 10% 25V

(IO-149 BOARD(For PAL); Suffix -14)

Ref. No. or Q'ty	Part No.	SP	Description
C125	1-126-392-11	s	ELECT, CHIP 100uF 20% 6.3V
C126	1-163-275-11	s	CERAMIC, CHIP 0.001uF 5% 50V
C127	1-164-004-11	s	CERAMIC, CHIP 0.1uF 10% 25V
C128	1-163-037-11	s	CERAMIC, CHIP 0.022uF 10% 25V
C129	1-163-037-11	s	CERAMIC, CHIP 0.022uF 10% 25V
C130	1-163-275-11	s	CERAMIC, CHIP 0.001uF 5% 50V
C131	1-163-037-11	s	CERAMIC, CHIP 0.022uF 10% 25V
C132	1-163-037-11	s	CERAMIC, CHIP 0.022uF 10% 25V
C133	1-163-237-11	s	CERAMIC, CHIP 27pF 5% 50V
C134	1-126-394-11	s	ELECT, CHIP 10uF 20% 16V
C135	1-126-394-11	s	ELECT, CHIP 10uF 20% 16V
C136	1-163-037-11	s	CERAMIC, CHIP 0.022uF 10% 25V
C137	1-163-037-11	s	CERAMIC, CHIP 0.022uF 10% 25V
C138	1-163-037-11	s	CERAMIC, CHIP 0.022uF 10% 25V
C139	1-163-037-11	s	CERAMIC, CHIP 0.022uF 10% 25V
C140	1-163-037-11	s	CERAMIC, CHIP 0.022uF 10% 25V
C141	1-163-037-11	s	CERAMIC, CHIP 0.022uF 10% 25V
C142	1-126-392-11	s	ELECT, CHIP 100uF 20% 6.3V
C143	1-126-392-11	s	ELECT, CHIP 100uF 20% 6.3V
C144	1-163-037-11	s	CERAMIC, CHIP 0.022uF 10% 25V
C145	1-163-037-11	s	CERAMIC, CHIP 0.022uF 10% 25V
C146	1-163-037-11	s	CERAMIC, CHIP 0.022uF 10% 25V
C147	1-163-037-11	s	CERAMIC, CHIP 0.022uF 10% 25V
C148	1-163-037-11	s	CERAMIC, CHIP 0.022uF 10% 25V
C149	1-163-037-11	s	CERAMIC, CHIP 0.022uF 10% 25V
C150	1-163-037-11	s	CERAMIC, CHIP 0.022uF 10% 25V
C151	1-163-037-11	s	CERAMIC, CHIP 0.022uF 10% 25V
C152	1-163-037-11	s	CERAMIC, CHIP 0.022uF 10% 25V
C153	1-126-391-11	s	ELECT, CHIP 47uF 20% 6.3V
C154	1-163-231-11	s	CERAMIC, CHIP 15pF 5% 50V
C155	1-163-037-11	s	CERAMIC, CHIP 0.022uF 10% 25V
C156	1-163-038-91	s	CERAMIC, CHIP 0.1uF 25V
C157	1-163-037-11	s	CERAMIC, CHIP 0.022uF 10% 25V
C158	1-163-037-11	s	CERAMIC, CHIP 0.022uF 10% 25V
C159	1-163-038-91	s	CERAMIC, CHIP 0.1uF 25V
C160	1-163-037-11	s	CERAMIC, CHIP 0.022uF 10% 25V
C161	1-163-037-11	s	CERAMIC, CHIP 0.022uF 10% 25V
C162	1-163-038-91	s	CERAMIC, CHIP 0.1uF 25V
C163	1-163-038-91	s	CERAMIC, CHIP 0.1uF 25V
C164	1-163-038-91	s	CERAMIC, CHIP 0.1uF 25V
C165	1-126-391-11	s	ELECT, CHIP 47uF 20% 6.3V
C166	1-163-037-11	s	CERAMIC, CHIP 0.022uF 10% 25V
C167	1-126-391-11	s	ELECT, CHIP 47uF 20% 6.3V
C168	1-163-037-11	s	CERAMIC, CHIP 0.022uF 10% 25V
C169	1-163-037-11	s	CERAMIC, CHIP 0.022uF 10% 25V
C170	1-163-037-11	s	CERAMIC, CHIP 0.022uF 10% 25V
C171	1-126-391-11	s	ELECT, CHIP 47uF 20% 6.3V
C172	1-126-396-11	s	ELECT, CHIP 47uF 20% 16V
C173	1-126-396-11	s	ELECT, CHIP 47uF 20% 16V
C174	1-126-391-11	s	ELECT, CHIP 47uF 20% 6.3V
C175	1-126-391-11	s	ELECT, CHIP 47uF 20% 6.3V
C176	1-126-391-11	s	ELECT, CHIP 47uF 20% 6.3V
C177	1-126-391-11	s	ELECT, CHIP 47uF 20% 6.3V
C178	1-126-391-11	s	ELECT, CHIP 47uF 20% 6.3V
C179	1-163-037-11	s	CERAMIC, CHIP 0.022uF 10% 25V
C180	1-163-037-11	s	CERAMIC, CHIP 0.022uF 10% 25V
C181	1-163-037-11	s	CERAMIC, CHIP 0.022uF 10% 25V
C182	1-163-037-11	s	CERAMIC, CHIP 0.022uF 10% 25V
C183	1-163-037-11	s	CERAMIC, CHIP 0.022uF 10% 25V

(IO-149 BOARD(For PAL); Suffix -14)

Ref. No. or Q'ty	Part No.	SP	Description
C184	1-163-037-11	s	CERAMIC, CHIP 0.022uF 10% 25V
C185	1-163-037-11	s	CERAMIC, CHIP 0.022uF 10% 25V
C186	1-163-037-11	s	CERAMIC, CHIP 0.022uF 10% 25V
C187	1-163-037-11	s	CERAMIC, CHIP 0.022uF 10% 25V
C190	1-163-099-00	s	CERAMIC, CHIP 18pF 5% 50V
C191	1-163-037-11	s	CERAMIC, CHIP 0.022uF 10% 25V
C192	1-163-037-11	s	CERAMIC, CHIP 0.022uF 10% 25V
C193	1-163-037-11	s	CERAMIC, CHIP 0.022uF 10% 25V
C194	1-126-401-11	s	ELECT, CHIP 1uF 20% 50V
C195	1-126-401-11	s	ELECT, CHIP 1uF 20% 50V
C196	1-126-394-11	s	ELECT, CHIP 10uF 20% 16V
C197	1-126-401-11	s	ELECT, CHIP 1uF 20% 50V
C198	1-126-394-11	s	ELECT, CHIP 10uF 20% 16V
C199	1-163-038-91	s	CERAMIC, CHIP 0.1uF 25V
C200	1-126-401-11	s	ELECT, CHIP 1uF 20% 50V
C201	1-163-038-91	s	CERAMIC, CHIP 0.1uF 25V
C202	1-163-809-11	s	CERAMIC, CHIP 0.047uF 10% 25V
C203	1-163-809-11	s	CERAMIC, CHIP 0.047uF 10% 25V
C204	1-163-809-11	s	CERAMIC, CHIP 0.047uF 10% 25V
C205	1-163-227-11	s	CERAMIC, CHIP 10pF 5% 50V
C206	1-163-037-11	s	CERAMIC, CHIP 0.022uF 10% 25V
C207	1-163-037-11	s	CERAMIC, CHIP 0.022uF 10% 25V
C208	1-163-037-11	s	CERAMIC, CHIP 0.022uF 10% 25V
C209	1-163-037-11	s	CERAMIC, CHIP 0.022uF 10% 25V
C210	1-163-037-11	s	CERAMIC, CHIP 0.022uF 10% 25V
C211	1-126-396-11	s	ELECT, CHIP 47uF 20% 16V
C212	1-163-037-11	s	CERAMIC, CHIP 0.022uF 10% 25V
C213	1-163-235-11	s	CERAMIC, CHIP 22pF 5% 50V
C214	1-163-037-11	s	CERAMIC, CHIP 0.022uF 10% 25V
C215	1-126-396-11	s	ELECT, CHIP 47uF 20% 16V
C216	1-163-037-11	s	CERAMIC, CHIP 0.022uF 10% 25V
C217	1-126-390-11	s	ELECT, CHIP 22uF 20% 6.3V
C218	1-163-037-11	s	CERAMIC, CHIP 0.022uF 10% 25V
C219	1-163-037-11	s	CERAMIC, CHIP 0.022uF 10% 25V
C220	1-163-251-11	s	CERAMIC, CHIP 100pF 5% 50V
C221	1-163-243-11	s	CERAMIC, CHIP 47pF 5% 50V
C222	1-163-227-11	s	CERAMIC, CHIP 10pF 5% 50V
C223	1-163-121-00	s	CERAMIC, CHIP 150pF 5% 50V
C224	1-163-037-11	s	CERAMIC, CHIP 0.022uF 10% 25V
C225	1-163-087-00	s	CERAMIC, CHIP 4pF 50V
C226	1-163-037-11	s	CERAMIC, CHIP 0.022uF 10% 25V
C227	1-163-227-11	s	CERAMIC, CHIP 10pF 5% 50V
C228	1-163-231-11	s	CERAMIC, CHIP 15pF 5% 50V
C229	1-163-259-91	s	CERAMIC, CHIP 220pF 5% 50V
C230	1-126-390-11	s	ELECT, CHIP 22uF 20% 6.3V
C231	1-163-037-11	s	CERAMIC, CHIP 0.022uF 10% 25V
C232	1-163-037-11	s	CERAMIC, CHIP 0.022uF 10% 25V
C233	1-163-037-11	s	CERAMIC, CHIP 0.022uF 10% 25V
C234	1-163-037-11	s	CERAMIC, CHIP 0.022uF 10% 25V
C235	1-163-227-11	s	CERAMIC, CHIP 10pF 5% 50V
C301	1-126-391-11	s	ELECT, CHIP 47uF 20% 6.3V
C302	1-126-391-11	s	ELECT, CHIP 47uF 20% 6.3V
C303	1-163-038-91	s	CERAMIC, CHIP 0.1uF 25V
C304	1-126-391-11	s	ELECT, CHIP 47uF 20% 6.3V
C305	1-126-391-11	s	ELECT, CHIP 47uF 20% 6.3V
C306	1-163-038-91	s	CERAMIC, CHIP 0.1uF 25V
C307	1-163-038-91	s	CERAMIC, CHIP 0.1uF 25V
C308	1-163-038-91	s	CERAMIC, CHIP 0.1uF 25V
C309	1-163-231-11	s	CERAMIC, CHIP 15pF 5% 50V

(IO-149 BOARD(For PAL); Suffix -14)

Ref. No. or Q'ty	Part No.	SP	Description
C310	1-163-037-11	s	CERAMIC, CHIP 0.022uF 10% 25V
C311	1-163-259-91	s	CERAMIC, CHIP 220pF 5% 50V
C312	1-163-037-11	s	CERAMIC, CHIP 0.022uF 10% 25V
C313	1-163-038-91	s	CERAMIC, CHIP 0.1uF 25V
C314	1-163-038-91	s	CERAMIC, CHIP 0.1uF 25V
C315	1-163-037-11	s	CERAMIC, CHIP 0.022uF 10% 25V
C316	1-163-037-11	s	CERAMIC, CHIP 0.022uF 10% 25V
C317	1-163-037-11	s	CERAMIC, CHIP 0.022uF 10% 25V
C318	1-163-231-11	s	CERAMIC, CHIP 15pF 5% 50V
C319	1-163-259-91	s	CERAMIC, CHIP 220pF 5% 50V
C320	1-163-037-11	s	CERAMIC, CHIP 0.022uF 10% 25V
C321	1-126-391-11	s	ELECT, CHIP 47uF 20% 6.3V
C324	1-163-038-91	s	CERAMIC, CHIP 0.1uF 25V
C326	1-126-396-11	s	ELECT, CHIP 47uF 20% 16V
C327	1-126-391-11	s	ELECT, CHIP 47uF 20% 6.3V
C328	1-163-037-11	s	CERAMIC, CHIP 0.022uF 10% 25V
C329	1-126-396-11	s	ELECT, CHIP 47uF 20% 16V
C330	1-163-037-11	s	CERAMIC, CHIP 0.022uF 10% 25V
C331	1-126-396-11	s	ELECT, CHIP 47uF 20% 16V
C332	1-163-038-91	s	CERAMIC, CHIP 0.1uF 25V
C333	1-163-038-91	s	CERAMIC, CHIP 0.1uF 25V
C334	1-163-222-11	s	CERAMIC, CHIP 5pF 50V
C335	1-163-231-11	s	CERAMIC, CHIP 15pF 5% 50V
C336	1-163-037-11	s	CERAMIC, CHIP 0.022uF 10% 25V
C337	1-163-231-11	s	CERAMIC, CHIP 15pF 5% 50V
C338	1-163-038-91	s	CERAMIC, CHIP 0.1uF 25V
C339	1-163-243-11	s	CERAMIC, CHIP 47pF 5% 50V
C340	1-163-243-11	s	CERAMIC, CHIP 47pF 5% 50V
C341	1-163-239-11	s	CERAMIC, CHIP 33pF 5% 50V
C342	1-163-239-11	s	CERAMIC, CHIP 33pF 5% 50V
C343	1-126-392-11	s	ELECT, CHIP 100uF 20% 6.3V
C344	1-163-237-11	s	CERAMIC, CHIP 27pF 5% 50V
C345	1-163-237-11	s	CERAMIC, CHIP 27pF 5% 50V
C346	1-126-394-11	s	ELECT, CHIP 10uF 20% 16V
C347	1-126-394-11	s	ELECT, CHIP 10uF 20% 16V
C348	1-126-391-11	s	ELECT, CHIP 47uF 20% 6.3V
C349	1-163-809-11	s	CERAMIC, CHIP 0.047uF 10% 25V
C350	1-126-391-11	s	ELECT, CHIP 47uF 20% 6.3V
C351	1-163-038-91	s	CERAMIC, CHIP 0.1uF 25V
C352	1-163-037-11	s	CERAMIC, CHIP 0.022uF 10% 25V
C353	1-163-037-11	s	CERAMIC, CHIP 0.022uF 10% 25V
C354	1-163-038-91	s	CERAMIC, CHIP 0.1uF 25V
C355	1-163-227-11	s	CERAMIC, CHIP 10pF 5% 50V
C356	1-163-037-11	s	CERAMIC, CHIP 0.022uF 10% 25V
C357	1-163-037-11	s	CERAMIC, CHIP 0.022uF 10% 25V
C358	1-163-037-11	s	CERAMIC, CHIP 0.022uF 10% 25V
C359	1-163-038-91	s	CERAMIC, CHIP 0.1uF 25V
C360	1-163-038-91	s	CERAMIC, CHIP 0.1uF 25V
C361	1-163-038-91	s	CERAMIC, CHIP 0.1uF 25V
C362	1-163-237-11	s	CERAMIC, CHIP 27pF 5% 50V
C363	1-163-037-11	s	CERAMIC, CHIP 0.022uF 10% 25V
C364	1-163-037-11	s	CERAMIC, CHIP 0.022uF 10% 25V
C365	1-163-222-11	s	CERAMIC, CHIP 5pF 50V
C366	1-163-037-11	s	CERAMIC, CHIP 0.022uF 10% 25V
C367	1-163-243-11	s	CERAMIC, CHIP 47pF 5% 50V
C368	1-163-037-11	s	CERAMIC, CHIP 0.022uF 10% 25V
C369	1-163-037-11	s	CERAMIC, CHIP 0.022uF 10% 25V
C370	1-163-037-11	s	CERAMIC, CHIP 0.022uF 10% 25V
C371	1-163-037-11	s	CERAMIC, CHIP 0.022uF 10% 25V

(IO-149 BOARD(For PAL); Suffix -14)

Ref. No. or Q'ty	Part No.	SP	Description
C372	1-163-037-11	s	CERAMIC, CHIP 0.022uF 10% 25V
C373	1-126-391-11	s	ELECT, CHIP 47uF 20% 6.3V
C374	1-163-037-11	s	CERAMIC, CHIP 0.022uF 10% 25V
C375	1-163-037-11	s	CERAMIC, CHIP 0.022uF 10% 25V
C376	1-163-037-11	s	CERAMIC, CHIP 0.022uF 10% 25V
C377	1-126-391-11	s	ELECT, CHIP 47uF 20% 6.3V
C378	1-126-396-11	s	ELECT, CHIP 47uF 20% 16V
C379	1-163-037-11	s	CERAMIC, CHIP 0.022uF 10% 25V
C380	1-163-037-11	s	CERAMIC, CHIP 0.022uF 10% 25V
C381	1-163-227-11	s	CERAMIC, CHIP 10pF 5% 50V
C382	1-163-037-11	s	CERAMIC, CHIP 0.022uF 10% 25V
C383	1-163-227-11	s	CERAMIC, CHIP 10pF 5% 50V
C384	1-163-037-11	s	CERAMIC, CHIP 0.022uF 10% 25V
C385	1-163-038-91	s	CERAMIC, CHIP 0.1uF 25V
C386	1-163-038-91	s	CERAMIC, CHIP 0.1uF 25V
C387	1-163-037-11	s	CERAMIC, CHIP 0.022uF 10% 25V
C388	1-163-113-00	s	CERAMIC, CHIP 68pF 5% 50V
C501	1-163-239-11	s	CERAMIC, CHIP 33pF 5% 50V
C502	1-163-038-91	s	CERAMIC, CHIP 0.1uF 25V
C503	1-126-394-11	s	ELECT, CHIP 10uF 20% 16V
C504	1-126-394-11	s	ELECT, CHIP 10uF 20% 16V
C505	1-126-394-11	s	ELECT, CHIP 10uF 20% 16V
C506	1-163-037-11	s	CERAMIC, CHIP 0.022uF 10% 25V
C507	1-126-396-11	s	ELECT, CHIP 47uF 20% 16V
C508	1-126-396-11	s	ELECT, CHIP 47uF 20% 16V
C509	1-126-394-11	s	ELECT, CHIP 10uF 20% 16V
C510	1-126-394-11	s	ELECT, CHIP 10uF 20% 16V
C511	1-126-401-11	s	ELECT, CHIP 1uF 20% 50V
C512	1-163-235-11	s	CERAMIC, CHIP 22pF 5% 50V
C513	1-164-222-11	s	CERAMIC, CHIP 0.22uF 25V
C514	1-163-038-91	s	CERAMIC, CHIP 0.1uF 25V
C515	1-163-038-91	s	CERAMIC, CHIP 0.1uF 25V
C516	1-163-259-91	s	CERAMIC, CHIP 220pF 5% 50V
C517	1-163-021-91	s	CERAMIC 0.01uF 10% 50V
C518	1-163-037-11	s	CERAMIC, CHIP 0.022uF 10% 25V
C519	1-163-038-91	s	CERAMIC, CHIP 0.1uF 25V
C520	1-163-038-91	s	CERAMIC, CHIP 0.1uF 25V
C521	1-126-396-11	s	ELECT, CHIP 47uF 20% 16V
C522	1-126-393-11	s	ELECT, CHIP 33uF 20% 10V
C523	1-163-038-91	s	CERAMIC, CHIP 0.1uF 25V
C524	1-163-239-11	s	CERAMIC, CHIP 33pF 5% 50V
C525	1-163-259-91	s	CERAMIC, CHIP 220pF 5% 50V
C526	1-163-038-91	s	CERAMIC, CHIP 0.1uF 25V
C527	1-163-037-11	s	CERAMIC, CHIP 0.022uF 10% 25V
C528	1-163-038-91	s	CERAMIC, CHIP 0.1uF 25V
C529	1-163-037-11	s	CERAMIC, CHIP 0.022uF 10% 25V
C530	1-163-038-91	s	CERAMIC, CHIP 0.1uF 25V
C531	1-163-038-91	s	CERAMIC, CHIP 0.1uF 25V
C532	1-163-038-91	s	CERAMIC, CHIP 0.1uF 25V
C533	1-163-038-91	s	CERAMIC, CHIP 0.1uF 25V
C534	1-126-391-11	s	ELECT, CHIP 47uF 20% 6.3V
C535	1-163-038-91	s	CERAMIC, CHIP 0.1uF 25V
C536	1-163-038-91	s	CERAMIC, CHIP 0.1uF 25V
C537	1-163-989-11	s	CERAMIC, CHIP 0.033uF 10% 25V
C538	1-163-121-00	s	CERAMIC, CHIP 150pF 5% 50V
C539	1-163-038-91	s	CERAMIC, CHIP 0.1uF 25V
C540	1-163-038-91	s	CERAMIC, CHIP 0.1uF 25V
C541	1-163-038-91	s	CERAMIC, CHIP 0.1uF 25V
C543	1-126-391-11	s	ELECT, CHIP 47uF 20% 6.3V

(IO-149 BOARD(For PAL); Suffix -14)

Ref. No. or Q'ty	Part No.	SP	Description
C544	1-126-391-11	s	ELECT, CHIP 47uF 20% 6.3V
C545	1-163-038-91	s	CERAMIC, CHIP 0.1uF 25V
C546	1-163-235-11	s	CERAMIC, CHIP 22pF 5% 50V
C547	1-163-037-11	s	CERAMIC, CHIP 0.022uF 10% 25V
C548	1-163-038-91	s	CERAMIC, CHIP 0.1uF 25V
C549	1-126-391-11	s	ELECT, CHIP 47uF 20% 6.3V
C550	1-163-251-11	s	CERAMIC, CHIP 100pF 5% 50V
C551	1-163-037-11	s	CERAMIC, CHIP 0.022uF 10% 25V
C552	1-163-038-91	s	CERAMIC, CHIP 0.1uF 25V
C553	1-163-038-91	s	CERAMIC, CHIP 0.1uF 25V
C554	1-163-133-00	s	CERAMIC, CHIP 470pF 5% 50V
C601	1-163-037-11	s	CERAMIC, CHIP 0.022uF 10% 25V
C602	1-163-037-11	s	CERAMIC, CHIP 0.022uF 10% 25V
C603	1-163-037-11	s	CERAMIC, CHIP 0.022uF 10% 25V
C604	1-163-275-11	s	CERAMIC, CHIP 0.001uF 5% 50V
C605	1-126-401-11	s	ELECT, CHIP 1uF 20% 50V
C606	1-126-404-11	s	ELECT, CHIP 4.7uF 20% 50V
C607	1-163-021-91	s	CERAMIC, CHIP 0.01uF 10% 50V
C608	1-163-037-11	s	CERAMIC, CHIP 0.022uF 10% 25V
C609	1-163-037-11	s	CERAMIC, CHIP 0.022uF 10% 25V
C611	1-164-004-11	s	CERAMIC, CHIP 0.1uF 10% 25V
C612	1-163-227-11	s	CERAMIC, CHIP 10pF 5% 50V
C613	1-163-237-11	s	CERAMIC, CHIP 27pF 5% 50V
C614	1-163-243-11	s	CERAMIC, CHIP 47pF 5% 50V
C615	1-163-113-00	s	CERAMIC, CHIP 68pF 5% 50V
C616	1-163-021-91	s	CERAMIC, CHIP 0.01uF 10% 50V
C617	1-163-121-00	s	CERAMIC, CHIP 150pF 5% 50V
C618	1-163-021-91	s	CERAMIC, CHIP 0.01uF 10% 50V
C619	1-163-263-11	s	CERAMIC, CHIP 330pF 5% 50V
C620	1-163-809-11	s	CERAMIC, CHIP 0.047uF 10% 25V
C621	1-163-809-11	s	CERAMIC, CHIP 0.047uF 10% 25V
C622	1-163-038-91	s	CERAMIC, CHIP 0.1uF 25V
C623	1-163-038-91	s	CERAMIC, CHIP 0.1uF 25V
C624	1-163-038-91	s	CERAMIC, CHIP 0.1uF 25V
C625	1-163-037-11	s	CERAMIC, CHIP 0.022uF 10% 25V
C626	1-163-227-11	s	CERAMIC, CHIP 10pF 5% 50V
C627	1-126-391-11	s	ELECT, CHIP 47uF 20% 6.3V
C628	1-163-037-11	s	CERAMIC, CHIP 0.022uF 10% 25V
C629	1-126-391-11	s	ELECT, CHIP 47uF 20% 6.3V
C631	1-163-227-11	s	CERAMIC, CHIP 10pF 5% 50V
C632	1-126-401-11	s	ELECT, CHIP 1uF 20% 50V
C633	1-163-037-11	s	CERAMIC, CHIP 0.022uF 10% 25V
C634	1-163-243-11	s	CERAMIC, CHIP 47pF 5% 50V
C635	1-163-037-11	s	CERAMIC, CHIP 0.022uF 10% 25V
C636	1-163-037-11	s	CERAMIC, CHIP 0.022uF 10% 25V
C637	1-163-037-11	s	CERAMIC, CHIP 0.022uF 10% 25V
C638	1-163-038-91	s	CERAMIC, CHIP 0.1uF 25V
C639	1-163-099-00	s	CERAMIC, CHIP 18pF 5% 50V
C640	1-163-037-11	s	CERAMIC, CHIP 0.022uF 10% 25V
C641	1-163-038-91	s	CERAMIC, CHIP 0.1uF 25V
C642	1-163-037-11	s	CERAMIC, CHIP 0.022uF 10% 25V
C643	1-163-243-11	s	CERAMIC, CHIP 47pF 5% 50V
C644	1-163-037-11	s	CERAMIC, CHIP 0.022uF 10% 25V
C645	1-126-393-11	s	ELECT, CHIP 33uF 20% 10V
C646	1-163-037-11	s	CERAMIC, CHIP 0.022uF 10% 25V
C647	1-163-037-11	s	CERAMIC, CHIP 0.022uF 10% 25V
C648	1-163-037-11	s	CERAMIC, CHIP 0.022uF 10% 25V
C649	1-163-037-11	s	CERAMIC, CHIP 0.022uF 10% 25V
C650	1-126-393-11	s	ELECT, CHIP 33uF 20% 10V

(IO-149 BOARD(For PAL); Suffix -14)

Ref. No. or Q'ty	Part No.	SP	Description
C651	1-163-037-11	s	CERAMIC, CHIP 0.022uF 10% 25V
C652	1-163-239-11	s	CERAMIC, CHIP 33pF 5% 50V
C653	1-163-239-11	s	CERAMIC, CHIP 33pF 5% 50V
C654	1-163-113-00	s	CERAMIC, CHIP 68pF 5% 50V
C655	1-163-113-00	s	CERAMIC, CHIP 68pF 5% 50V
C656	1-163-239-11	s	CERAMIC, CHIP 33pF 5% 50V
C657	1-163-239-11	s	CERAMIC, CHIP 33pF 5% 50V
C658	1-163-037-11	s	CERAMIC, CHIP 0.022uF 10% 25V
C659	1-163-037-11	s	CERAMIC, CHIP 0.022uF 10% 25V
C660	1-163-037-11	s	CERAMIC, CHIP 0.022uF 10% 25V
C661	1-163-037-11	s	CERAMIC, CHIP 0.022uF 10% 25V
C662	1-102-110-00	s	CERAMIC, CHIP 220pF 10% 50V
C663	1-163-133-00	s	CERAMIC, CHIP 470pF 5% 50V
CT601	1-141-345-11	s	CAP, TRIMMER, CHIP 40pF
CT602	1-141-345-11	s	CAP, TRIMMER, CHIP 40pF
D1	8-719-941-04	s	DIODE SB007-03CP
D2	8-719-941-04	s	DIODE SB007-03CP
D3	8-719-053-18	s	DIODE 1SR154-400TE-25
D4	8-719-053-18	s	DIODE 1SR154-400TE-25
D5	8-719-053-18	s	DIODE 1SR154-400TE-25
D101	8-719-041-39	s	DIODE KV1470
D102	8-719-041-39	s	DIODE KV1470
D103	8-719-041-39	s	DIODE KV1470
D104	8-719-941-23	s	DIODE DA204U
D105	8-719-941-23	s	DIODE DA204U
D106	8-719-989-08	s	DIODE RB717F
D301	8-719-976-99	s	DIODE DTZ5.1B
D302	8-719-941-23	s	DIODE DA204U
D501	8-719-941-23	s	DIODE DA204U
D601	8-719-002-81	s	DIODE 1T363
D602	8-719-002-81	s	DIODE 1T363
F1	⚠ 1-576-124-11	s	LINK, IC, CHIP 1A
F2	⚠ 1-533-282-21	s	LINK, IC, CHIP 2A
F3	⚠ 1-576-124-11	s	LINK, IC, CHIP 1A
F4	⚠ 1-533-282-21	s	LINK, IC, CHIP 2A
F5	⚠ 1-576-124-11	s	LINK, IC, CHIP 1A
F6	⚠ 1-533-282-21	s	LINK, IC, CHIP 2A
FL101	1-233-599-11	s	FILTER, LOW PASS
FL102	1-233-599-11	s	FILTER, LOW PASS
FL103	1-233-614-11	s	FILTER, LOW-PASS
FL104	1-239-771-11	s	FILTER, LOW-PASS
FL1001	1-239-719-11	s	FILTER, NOISE, CHIP
FL1002	1-239-719-11	s	FILTER, NOISE, CHIP
FL1003	1-239-719-11	s	FILTER, NOISE, CHIP
IC1	8-759-157-17	s	IC PQ05SZ1U
IC2	8-759-157-17	s	IC PQ05SZ1U
IC3	8-759-172-41	s	IC L78M09T-TL
IC4	8-759-172-41	s	IC L78M09T-TL
IC5	8-759-822-95	s	IC L79M05T-FA
IC6	8-759-822-95	s	IC L79M05T-FA
IC7	8-759-822-95	s	IC L79M05T-FA
IC8	8-759-157-17	s	IC PQ05SZ1U
IC101	8-759-198-63	s	IC S-81230SG-QB-T1
IC102	8-759-278-58	s	IC NJM4558V-TE2
IC103	8-759-278-58	s	IC NJM4558V-TE2
IC105	8-759-278-58	s	IC NJM4558V-TE2

(IO-149 BOARD(For PAL); Suffix -14)

Ref. No. or Q'ty	Part No.	SP	Description
IC107	8-759-076-06	s	IC TL064CPW
IC108	8-759-076-06	s	IC TL064CPW
IC109	8-752-052-77	s	IC CXA1450M
IC110	8-752-363-60	s	IC CXD2307R-T4
IC111	8-759-287-54	s	IC TL084CPW-E20
IC112	8-759-287-54	s	IC TL084CPW-E20
IC113	8-759-287-54	s	IC TL084CPW-E20
IC114	8-759-066-59	s	IC TC74HC4053AFS
IC115	8-752-054-80	s	IC CXA1521M
IC116	8-752-054-80	s	IC CXA1521M
IC117	8-759-906-59	s	IC CX22017
IC118	8-759-907-81	s	IC SN74LS221NS
IC301	8-759-082-59	s	IC TC7W32FU
IC302	8-759-082-61	s	IC TC4W53FU
IC304	8-759-287-54	s	IC TL084CPW-E20
IC305	8-759-082-61	s	IC TC4W53FU
IC306	8-752-052-73	s	IC CXA1451M
IC307	8-752-052-73	s	IC CXA1451M
IC308	8-759-262-00	s	IC MC14576CF
IC309	8-752-052-73	s	IC CXA1451M
IC310	8-752-052-73	s	IC CXA1451M
IC311	8-752-052-73	s	IC CXA1451M
IC312	8-759-082-61	s	IC TC4W53FU
IC501	8-759-082-57	s	IC TC7W04FU
IC502	8-752-052-77	s	IC CXA1450M
IC503	8-752-052-77	s	IC CXA1450M
IC504	8-759-173-16	s	IC TL062CPW
IC505	8-759-076-06	s	IC TL064CPW
IC506	8-759-430-88	s	IC TC74HC4051AFS(EL)
IC507	8-759-324-03	s	IC HA17431UA-TL
IC508	8-759-076-06	s	IC TL064CPW
IC509	8-752-052-77	s	IC CXA1450M
IC510	8-759-262-03	s	IC MC14577CF
IC512	8-759-987-27	s	IC LM1881M
IC513	8-759-523-97	s	IC TC74VHC123AFT(EL)
IC514	8-759-980-04	s	IC LM311PS
IC515	8-759-702-08	s	IC NJM360M
IC516	8-752-052-77	s	IC CXA1450M
IC601	8-759-082-57	s	IC TC7W04FU
IC602	8-759-459-26	s	IC TC5081BP
IC603	8-759-524-04	s	IC TC74VHC125FT(EL)
IC604	8-759-058-57	s	IC TC7S04FU-TE85L
IC605	8-759-357-24	s	IC MC68HC705C8AFU
IC606	8-752-335-47	s	IC CXD1216M
IC607	8-759-066-59	s	IC TC74HC4053AFS
IC608	8-759-241-03	s	IC TC74HC191AF
IC609	8-759-082-57	s	IC TC7W04FU
IC610	8-759-271-86	s	IC TC7SH04FU
IC611	8-759-271-86	s	IC TC7SH04FU
IC612	8-759-523-97	s	IC TC74VHC123AFT(EL)
IC613	8-759-524-22	s	IC TC74VHC175FT(EL)
IC614	8-759-526-00	s	IC CXD8165AQ
IC615	8-752-339-46	s	IC CXD1177Q
IC616	8-759-082-57	s	IC TC7W04FU
IC617	8-759-066-59	s	IC TC74HC4053AFS
IC618	8-759-271-86	s	IC TC7SH04FU
IC619	8-759-271-86	s	IC TC7SH04FU
L101	1-414-402-11	s	INDUCTOR, CHIP 47uH

(IO-149 BOARD(For PAL); Suffix -14)

Ref. No. or Q'ty	Part No.	SP	Description
L102	1-414-400-11	s	INDUCTOR, CHIP 22uH
L103	1-414-400-11	s	INDUCTOR, CHIP 22uH
L104	1-414-402-11	s	INDUCTOR, CHIP 47uH
L105	1-414-402-11	s	INDUCTOR, CHIP 47uH
L106	1-414-400-11	s	INDUCTOR, CHIP 22uH
L107	1-414-400-11	s	INDUCTOR, CHIP 22uH
L108	1-414-402-11	s	INDUCTOR, CHIP 47uH
L109	1-414-402-11	s	INDUCTOR, CHIP 47uH
L110	1-414-402-11	s	INDUCTOR, CHIP 47uH
L111	1-414-402-11	s	INDUCTOR, CHIP 47uH
L112	1-414-404-11	s	INDUCTOR, CHIP 100uH
L113	1-414-402-11	s	INDUCTOR, CHIP 47uH
L114	1-414-404-11	s	INDUCTOR, CHIP 100uH
L115	1-410-385-11	s	INDUCTOR, CHIP 22uH
L116	1-410-385-11	s	INDUCTOR, CHIP 22uH
L117	1-410-393-11	s	INDUCTOR, CHIP 100uH
L301	1-414-402-11	s	INDUCTOR, CHIP 47uH
L302	1-414-402-11	s	INDUCTOR, CHIP 47uH
L303	1-414-402-11	s	INDUCTOR, CHIP 47uH
L304	1-414-402-11	s	INDUCTOR, CHIP 47uH
L305	1-410-393-11	s	INDUCTOR, CHIP 100uH
L306	1-410-393-11	s	INDUCTOR, CHIP 100uH
L307	1-414-402-11	s	INDUCTOR, CHIP 47uH
L308	1-414-402-11	s	INDUCTOR, CHIP 47uH
L309	1-414-402-11	s	INDUCTOR, CHIP 47uH
L310	1-410-387-11	s	INDUCTOR, CHIP 33uH
L311	1-410-387-11	s	INDUCTOR, CHIP 33uH
L312	1-414-402-11	s	INDUCTOR, CHIP 47uH
L313	1-414-402-11	s	INDUCTOR, CHIP 47uH
L314	1-410-389-31	s	INDUCTOR, CHIP 47uH
L315	1-410-387-11	s	INDUCTOR, CHIP 33uH
L501	1-410-392-11	s	INDUCTOR, CHIP 82uH
L502	1-410-393-11	s	INDUCTOR, CHIP 100uH
L503	1-414-402-11	s	INDUCTOR, CHIP 47uH
L504	1-414-402-11	s	INDUCTOR, CHIP 47uH
L505	1-410-391-11	s	INDUCTOR, CHIP 68uH
L506	1-414-402-11	s	INDUCTOR, CHIP 47uH
L507	1-414-402-11	s	INDUCTOR, CHIP 47uH
L601	1-414-402-11	s	INDUCTOR, CHIP 47uH
L602	1-414-402-11	s	INDUCTOR, CHIP 47uH
L603	1-414-400-11	s	INDUCTOR, CHIP 22uH
L604	1-414-400-11	s	INDUCTOR, CHIP 22uH
L605	1-410-386-11	s	INDUCTOR, CHIP 27uH
L606	1-410-386-11	s	INDUCTOR, CHIP 27uH
L607	1-410-386-11	s	INDUCTOR, CHIP 27uH
L608	1-410-386-11	s	INDUCTOR, CHIP 27uH
Q101	8-729-117-32	s	TRANSISTOR 2SC4177
Q102	8-729-117-32	s	TRANSISTOR 2SC4177
Q103	8-729-117-32	s	TRANSISTOR 2SC4177
Q104	8-729-140-63	s	TRANSISTOR 2SA1611-M5M6
Q105	8-729-117-32	s	TRANSISTOR 2SC4177
Q106	8-729-117-32	s	TRANSISTOR 2SC4177
Q107	8-729-117-32	s	TRANSISTOR 2SC4177
Q108	8-729-923-06	s	TRANSISTOR FMW-8
Q109	8-729-923-06	s	TRANSISTOR FMW-8
Q110	8-729-923-06	s	TRANSISTOR FMW-8
Q111	8-729-904-04	s	TRANSISTOR FMS2
Q112	8-729-904-04	s	TRANSISTOR FMS2

(IO-149 BOARD(For PAL); Suffix -14)

Ref. No. or Q'ty	Part No.	SP	Description
Q113	8-729-904-04	s	TRANSISTOR FMS2
Q114	8-729-903-82	s	TRANSISTOR FMW2
Q115	8-729-903-82	s	TRANSISTOR FMW2
Q116	8-729-903-82	s	TRANSISTOR FMW2
Q117	8-729-931-46	s	TRANSISTOR FMW7
Q118	8-729-931-46	s	TRANSISTOR FMW7
Q119	8-729-931-46	s	TRANSISTOR FMW7
Q120	8-729-907-26	s	TRANSISTOR IMX1
Q121	8-729-907-26	s	TRANSISTOR IMX1
Q122	8-729-907-26	s	TRANSISTOR IMX1
Q123	8-729-143-14	s	TRANSISTOR 2SC4176-B35
Q124	8-729-117-32	s	TRANSISTOR 2SC4177
Q125	8-729-140-63	s	TRANSISTOR 2SA1611-M5M6
Q126	8-729-117-32	s	TRANSISTOR 2SC4177
Q127	8-729-143-14	s	TRANSISTOR 2SC4176-B35
Q128	8-729-140-63	s	TRANSISTOR 2SA1611-M5M6
Q129	8-729-903-82	s	TRANSISTOR FMW2
Q130	8-729-117-32	s	TRANSISTOR 2SC4177
Q131	8-729-903-82	s	TRANSISTOR FMW2
Q301	8-729-143-14	s	TRANSISTOR 2SC4176-B35
Q302	8-729-904-41	s	TRANSISTOR FMY3
Q303	8-729-140-63	s	TRANSISTOR 2SA1611-M5M6
Q304	8-729-140-63	s	TRANSISTOR 2SA1611-M5M6
Q305	8-729-117-32	s	TRANSISTOR 2SC4177
Q306	8-729-117-32	s	TRANSISTOR 2SC4177
Q307	8-729-907-26	s	TRANSISTOR IMX1
Q308	8-729-117-32	s	TRANSISTOR 2SC4177
Q309	8-729-117-32	s	TRANSISTOR 2SC4177
Q310	8-729-143-14	s	TRANSISTOR 2SC4176-B35
Q311	8-729-117-32	s	TRANSISTOR 2SC4177
Q312	8-729-907-26	s	TRANSISTOR IMX1
Q313	8-729-140-63	s	TRANSISTOR 2SA1611-M5M6
Q314	8-729-140-63	s	TRANSISTOR 2SA1611-M5M6
Q315	8-729-117-32	s	TRANSISTOR 2SC4177
Q316	8-729-140-63	s	TRANSISTOR 2SA1611-M5M6
Q317	8-729-117-32	s	TRANSISTOR 2SC4177
Q318	8-729-904-41	s	TRANSISTOR FMY3
Q319	8-729-904-41	s	TRANSISTOR FMY3
Q320	8-729-117-32	s	TRANSISTOR 2SC4177
Q321	8-729-117-32	s	TRANSISTOR 2SC4177
Q322	8-729-117-32	s	TRANSISTOR 2SC4177
Q323	8-729-143-14	s	TRANSISTOR 2SC4176-B35
Q324	8-729-140-63	s	TRANSISTOR 2SA1611-M5M6
Q325	8-729-140-63	s	TRANSISTOR 2SA1611-M5M6
Q326	8-729-117-32	s	TRANSISTOR 2SC4177
Q327	8-729-117-32	s	TRANSISTOR 2SC4177
Q328	8-729-117-32	s	TRANSISTOR 2SC4177
Q329	8-729-117-32	s	TRANSISTOR 2SC4177
Q330	8-729-117-32	s	TRANSISTOR 2SC4177
Q331	8-729-904-41	s	TRANSISTOR FMY3
Q332	8-729-422-44	s	TRANSISTOR 2SK663
Q333	8-729-422-44	s	TRANSISTOR 2SK663
Q334	8-729-422-44	s	TRANSISTOR 2SK663
Q335	8-729-422-44	s	TRANSISTOR 2SK663
Q336	8-729-140-63	s	TRANSISTOR 2SA1611-M5M6
Q337	8-729-140-63	s	TRANSISTOR 2SA1611-M5M6
Q338	8-729-140-63	s	TRANSISTOR 2SA1611-M5M6
Q339	8-729-140-63	s	TRANSISTOR 2SA1611-M5M6
Q340	8-729-117-32	s	TRANSISTOR 2SC4177

(IO-149 BOARD(For PAL); Suffix -14)

Ref. No. or Q'ty	Part No.	SP	Description
Q341	8-729-907-26	s	TRANSISTOR IMX1
Q342	8-729-907-26	s	TRANSISTOR IMX1
Q343	8-729-117-32	s	TRANSISTOR 2SC4177
Q344	8-729-117-32	s	TRANSISTOR 2SC4177
Q345	8-729-907-26	s	TRANSISTOR IMX1
Q346	8-729-117-32	s	TRANSISTOR 2SC4177
Q347	8-729-907-26	s	TRANSISTOR IMX1
Q348	8-729-117-32	s	TRANSISTOR 2SC4177
Q349	8-729-140-63	s	TRANSISTOR 2SA1611-M5M6
Q350	8-729-140-63	s	TRANSISTOR 2SA1611-M5M6
Q501	8-729-117-32	s	TRANSISTOR 2SC4177
Q502	8-729-117-32	s	TRANSISTOR 2SC4177
Q503	8-729-117-32	s	TRANSISTOR 2SC4177
Q504	8-729-117-32	s	TRANSISTOR 2SC4177
Q505	8-729-117-32	s	TRANSISTOR 2SC4177
Q506	8-729-904-41	s	TRANSISTOR FMY3
Q507	8-729-117-32	s	TRANSISTOR 2SC4177
Q508	8-729-117-32	s	TRANSISTOR 2SC4177
Q509	8-729-117-32	s	TRANSISTOR 2SC4177
Q601	8-729-140-47	s	TRANSISTOR 2SC3735-T2B-B35
Q602	8-729-140-47	s	TRANSISTOR 2SC3735-T2B-B35
Q603	8-729-140-47	s	TRANSISTOR 2SC3735-T2B-B35
Q604	8-729-140-47	s	TRANSISTOR 2SC3735-T2B-B35
Q605	8-729-117-32	s	TRANSISTOR 2SC4177
Q606	8-729-117-32	s	TRANSISTOR 2SC4177
Q607	8-729-117-32	s	TRANSISTOR 2SC4177
Q608	8-729-117-32	s	TRANSISTOR 2SC4177
R101	1-208-803-11	s	METAL, CHIP 7.5k 0.5% 1/10W
R102	1-208-796-11	s	METAL, CHIP 3.9k 0.5% 1/10W
R103	1-208-798-11	s	METAL, CHIP 4.7k 0.5% 1/10W
R104	1-208-806-11	s	METAL, CHIP 10k 0.5% 1/10W
R105	1-216-041-00	s	METAL, CHIP 470 5% 1/10W
R106	1-216-295-91	s	RES, CHIP 0
R107	1-208-783-11	s	METAL, CHIP 1.1k 0.5% 1/10W
R108	1-208-799-11	s	METAL, CHIP 5.1k 0.5% 1/10W
R110	1-216-295-91	s	RES, CHIP 0
R112	1-216-295-91	s	RES, CHIP 0
R113	1-208-799-11	s	METAL, CHIP 5.1k 0.5% 1/10W
R114	1-208-796-11	s	METAL, CHIP 3.9k 0.5% 1/10W
R115	1-208-794-11	s	METAL, CHIP 3.3k 0.5% 1/10W
R116	1-216-073-00	s	METAL, CHIP 10k 5% 1/10W
R117	1-208-786-11	s	METAL, CHIP 1.5k 0.5% 1/10W
R118	1-208-788-11	s	METAL, CHIP 1.8k 0.5% 1/10W
R119	1-208-806-11	s	METAL, CHIP 10k 0.5% 1/10W
R120	1-208-806-11	s	METAL, CHIP 10k 0.5% 1/10W
R121	1-216-073-00	s	METAL, CHIP 10k 5% 1/10W
R122	1-216-073-00	s	METAL, CHIP 10k 5% 1/10W
R123	1-216-085-00	s	METAL, CHIP 33k 5% 1/10W
R124	1-216-085-00	s	METAL, CHIP 33k 5% 1/10W
R125	1-216-121-91	s	METAL, CHIP 1M 5% 1/10W
R126	1-216-121-91	s	METAL, CHIP 1M 5% 1/10W
R127	1-216-085-00	s	METAL, CHIP 33k 5% 1/10W
R128	1-216-085-00	s	METAL, CHIP 33k 5% 1/10W
R129	1-216-121-91	s	METAL, CHIP 1M 5% 1/10W
R130	1-216-121-91	s	METAL, CHIP 1M 5% 1/10W
R131	1-216-033-00	s	METAL, CHIP 220 5% 1/10W
R132	1-216-033-00	s	METAL, CHIP 220 5% 1/10W
R133	1-216-053-00	s	METAL, CHIP 1.5k 5% 1/10W

(IO-149 BOARD(For PAL); Suffix -14)

Ref. No. or Q'ty	Part No.	SP	Description
R134	1-216-053-00	s	METAL, CHIP 1.5k 5% 1/10W
R135	1-208-806-11	s	METAL, CHIP 10k 0.5% 1/10W
R136	1-216-073-00	s	METAL, CHIP 10k 5% 1/10W
R137	1-216-081-00	s	METAL, CHIP 22k 5% 1/10W
R138	1-216-121-91	s	METAL, CHIP 1M 5% 1/10W
R139	1-216-085-00	s	METAL, CHIP 33k 5% 1/10W
R140	1-216-121-91	s	METAL, CHIP 1M 5% 1/10W
R141	1-216-033-00	s	METAL, CHIP 220 5% 1/10W
R144	1-208-808-11	s	METAL, CHIP 12k 0.5% 1/10W
R145	1-208-809-11	s	METAL, CHIP 13k 0.5% 1/10W
R146	1-208-809-11	s	METAL, CHIP 13k 0.5% 1/10W
R147	1-208-798-11	s	METAL, CHIP 4.7k 0.5% 1/10W
R148	1-208-809-11	s	METAL, CHIP 13k 0.5% 1/10W
R149	1-208-790-11	s	METAL, CHIP 2.2k 0.5% 1/10W
R150	1-208-804-11	s	METAL, CHIP 8.2k 0.5% 1/10W
R151	1-208-790-11	s	METAL, CHIP 2.2k 0.5% 1/10W
R152	1-208-792-11	s	METAL, CHIP 2.7k 0.5% 1/10W
R153	1-208-792-11	s	METAL, CHIP 2.7k 0.5% 1/10W
R154	1-216-085-00	s	METAL, CHIP 33k 5% 1/10W
R155	1-208-806-11	s	METAL, CHIP 10k 0.5% 1/10W
R156	1-208-806-11	s	METAL, CHIP 10k 0.5% 1/10W
R157	1-208-810-11	s	METAL, CHIP 15k 0.5% 1/10W
R158	1-208-810-11	s	METAL, CHIP 15k 0.5% 1/10W
R159	1-208-790-11	s	METAL, CHIP 2.2k 0.5% 1/10W
R160	1-208-810-11	s	METAL, CHIP 15k 0.5% 1/10W
R161	1-208-810-11	s	METAL, CHIP 15k 0.5% 1/10W
R162	1-208-792-11	s	METAL, CHIP 2.7k 0.5% 1/10W
R163	1-208-810-11	s	METAL, CHIP 15k 0.5% 1/10W
R164	1-208-802-11	s	METAL, CHIP 6.8k 0.5% 1/10W
R165	1-208-802-11	s	METAL, CHIP 6.8k 0.5% 1/10W
R166	1-208-810-11	s	METAL, CHIP 15k 0.5% 1/10W
R167	1-208-794-11	s	METAL, CHIP 3.3k 0.5% 1/10W
R168	1-208-790-11	s	METAL, CHIP 2.2k 0.5% 1/10W
R169	1-216-081-00	s	METAL, CHIP 22k 5% 1/10W
R170	1-216-081-00	s	METAL, CHIP 22k 5% 1/10W
R171	1-216-081-00	s	METAL, CHIP 22k 5% 1/10W
R172	1-208-776-11	s	METAL, CHIP 560 0.5% 1/10W
R173	1-208-796-11	s	METAL, CHIP 3.9k 0.5% 1/10W
R174	1-208-796-11	s	METAL, CHIP 3.9k 0.5% 1/10W
R175	1-216-089-91	s	METAL, CHIP 47k 5% 1/10W
R176	1-208-798-11	s	METAL, CHIP 4.7k 0.5% 1/10W
R177	1-216-089-91	s	METAL, CHIP 47k 5% 1/10W
R178	1-216-089-91	s	METAL, CHIP 47k 5% 1/10W
R179	1-208-770-11	s	METAL, CHIP 330 0.5% 1/10W
R180	1-208-770-11	s	METAL, CHIP 330 0.5% 1/10W
R181	1-208-770-11	s	METAL, CHIP 330 0.5% 1/10W
R182	1-208-770-11	s	METAL, CHIP 330 0.5% 1/10W
R183	1-208-770-11	s	METAL, CHIP 330 0.5% 1/10W
R184	1-208-770-11	s	METAL, CHIP 330 0.5% 1/10W
R185	1-216-045-00	s	METAL, CHIP 680 5% 1/10W
R186	1-216-045-00	s	METAL, CHIP 680 5% 1/10W
R187	1-216-017-91	s	METAL, CHIP 47 5% 1/10W
R188	1-216-017-91	s	METAL, CHIP 47 5% 1/10W
R189	1-216-045-00	s	METAL, CHIP 680 5% 1/10W
R190	1-216-017-91	s	METAL, CHIP 47 5% 1/10W
R191	1-216-017-91	s	METAL, CHIP 47 5% 1/10W
R192	1-216-017-91	s	METAL, CHIP 47 5% 1/10W
R193	1-216-017-91	s	METAL, CHIP 47 5% 1/10W
R194	1-216-057-00	s	METAL, CHIP 2.2k 5% 1/10W

(IO-149 BOARD(For PAL); Suffix -14)

Ref. No. or Q'ty	Part No.	SP	Description
R195	1-216-057-00	s	METAL, CHIP 2.2k 5% 1/10W
R196	1-216-057-00	s	METAL, CHIP 2.2k 5% 1/10W
R197	1-216-049-91	s	METAL, CHIP 1k 5% 1/10W
R198	1-216-049-91	s	METAL, CHIP 1k 5% 1/10W
R199	1-216-049-91	s	METAL, CHIP 1k 5% 1/10W
R200	1-216-049-91	s	METAL, CHIP 1k 5% 1/10W
R201	1-216-049-91	s	METAL, CHIP 1k 5% 1/10W
R202	1-216-049-91	s	METAL, CHIP 1k 5% 1/10W
R203	1-216-057-00	s	METAL, CHIP 2.2k 5% 1/10W
R204	1-216-057-00	s	METAL, CHIP 2.2k 5% 1/10W
R205	1-216-057-00	s	METAL, CHIP 2.2k 5% 1/10W
R206	1-216-033-00	s	METAL, CHIP 220 5% 1/10W
R207	1-216-033-00	s	METAL, CHIP 220 5% 1/10W
R208	1-216-033-00	s	METAL, CHIP 220 5% 1/10W
R209	1-216-045-00	s	METAL, CHIP 680 5% 1/10W
R210	1-216-045-00	s	METAL, CHIP 680 5% 1/10W
R211	1-216-045-00	s	METAL, CHIP 680 5% 1/10W
R212	1-216-077-00	s	METAL, CHIP 15k 5% 1/10W
R213	1-216-077-00	s	METAL, CHIP 15k 5% 1/10W
R214	1-216-077-00	s	METAL, CHIP 15k 5% 1/10W
R215	1-216-027-00	s	METAL, CHIP 120 5% 1/10W
R216	1-216-027-00	s	METAL, CHIP 120 5% 1/10W
R217	1-216-027-00	s	METAL, CHIP 120 5% 1/10W
R220	1-216-295-91	s	RES, CHIP 0
R221	1-216-017-91	s	METAL, CHIP 47 5% 1/10W
R222	1-216-017-91	s	METAL, CHIP 47 5% 1/10W
R223	1-216-017-91	s	METAL, CHIP 47 5% 1/10W
R224	1-208-782-11	s	METAL, CHIP 1k 0.5% 1/10W
R225	1-208-790-11	s	METAL, CHIP 2.2k 0.5% 1/10W
R226	1-208-782-11	s	METAL, CHIP 1k 0.5% 1/10W
R227	1-208-790-11	s	METAL, CHIP 2.2k 0.5% 1/10W
R228	1-216-049-91	s	METAL, CHIP 1k 5% 1/10W
R229	1-208-790-11	s	METAL, CHIP 2.2k 0.5% 1/10W
R230	1-208-782-11	s	METAL, CHIP 1k 0.5% 1/10W
R231	1-216-121-91	s	METAL, CHIP 1M 5% 1/10W
R232	1-216-049-91	s	METAL, CHIP 1k 5% 1/10W
R233	1-216-049-91	s	METAL, CHIP 1k 5% 1/10W
R234	1-216-121-91	s	METAL, CHIP 1M 5% 1/10W
R235	1-216-121-91	s	METAL, CHIP 1M 5% 1/10W
R236	1-216-049-91	s	METAL, CHIP 1k 5% 1/10W
R237	1-216-049-91	s	METAL, CHIP 1k 5% 1/10W
R238	1-216-049-91	s	METAL, CHIP 1k 5% 1/10W
R239	1-216-049-91	s	METAL, CHIP 1k 5% 1/10W
R240	1-216-049-91	s	METAL, CHIP 1k 5% 1/10W
R241	1-216-089-91	s	METAL, CHIP 47k 5% 1/10W
R242	1-216-049-91	s	METAL, CHIP 1k 5% 1/10W
R243	1-216-089-91	s	METAL, CHIP 47k 5% 1/10W
R244	1-216-073-00	s	METAL, CHIP 10k 5% 1/10W
R245	1-208-780-11	s	METAL, CHIP 820 0.5% 1/10W
R246	1-216-057-00	s	METAL, CHIP 2.2k 5% 1/10W
R247	1-208-782-11	s	METAL, CHIP 1k 0.5% 1/10W
R248	1-216-057-00	s	METAL, CHIP 2.2k 5% 1/10W
R249	1-208-774-11	s	METAL, CHIP 470 0.5% 1/10W
R250	1-208-770-11	s	METAL, CHIP 330 0.5% 1/10W
R251	1-208-774-11	s	METAL, CHIP 470 0.5% 1/10W
R252	1-208-808-11	s	METAL, CHIP 12k 0.5% 1/10W
R253	1-208-814-11	s	METAL, CHIP 22k 0.5% 1/10W
R254	1-208-812-11	s	METAL, CHIP 18k 0.5% 1/10W
R255	1-208-814-11	s	METAL, CHIP 22k 0.5% 1/10W

(IO-149 BOARD(For PAL); Suffix -14)

Ref. No. or Q'ty	Part No.	SP	Description
R256	1-216-097-91	s	METAL, CHIP 100k 5% 1/10W
R257	1-216-089-91	s	METAL, CHIP 47k 5% 1/10W
R258	1-216-295-91	s	RES, CHIP 0
R259	1-208-806-11	s	METAL, CHIP 10k 0.5% 1/10W
R260	1-216-073-00	s	METAL, CHIP 10k 5% 1/10W
R261	1-216-049-91	s	METAL, CHIP 1k 5% 1/10W
R262	1-208-813-11	s	METAL, CHIP 20k 0.5% 1/10W
R263	1-216-065-91	s	METAL, CHIP 4.7k 5% 1/10W
R264	1-216-065-91	s	METAL, CHIP 4.7k 5% 1/10W
R265	1-216-049-91	s	METAL, CHIP 1k 5% 1/10W
R266	1-216-049-91	s	METAL, CHIP 1k 5% 1/10W
R267	1-216-049-91	s	METAL, CHIP 1k 5% 1/10W
R268	1-216-049-91	s	METAL, CHIP 1k 5% 1/10W
R269	1-216-057-00	s	METAL, CHIP 2.2k 5% 1/10W
R270	1-208-778-11	s	METAL, CHIP 680 0.5% 1/10W
R271	1-216-081-00	s	METAL, CHIP 22k 5% 1/10W
R272	1-208-797-11	s	METAL, CHIP 4.3k 0.5% 1/10W
R273	1-208-782-11	s	METAL, CHIP 1k 0.5% 1/10W
R274	1-208-792-11	s	METAL, CHIP 2.7k 0.5% 1/10W
R275	1-216-057-00	s	METAL, CHIP 2.2k 5% 1/10W
R276	1-216-049-91	s	METAL, CHIP 1k 5% 1/10W
R277	1-216-081-00	s	METAL, CHIP 22k 5% 1/10W
R278	1-216-025-91	s	METAL, CHIP 100 5% 1/10W
R279	1-216-017-91	s	METAL, CHIP 47 5% 1/10W
R280	1-208-788-11	s	METAL, CHIP 1.8k 0.5% 1/10W
R281	1-216-073-00	s	METAL, CHIP 10k 5% 1/10W
R282	1-216-105-91	s	METAL, CHIP 220k 5% 1/10W
R283	1-216-081-00	s	METAL, CHIP 22k 5% 1/10W
R284	1-216-081-00	s	METAL, CHIP 22k 5% 1/10W
R285	1-216-081-00	s	METAL, CHIP 22k 5% 1/10W
R286	1-216-081-00	s	METAL, CHIP 22k 5% 1/10W
R301	1-216-065-91	s	METAL, CHIP 4.7k 5% 1/10W
R302	1-216-025-91	s	METAL, CHIP 100 5% 1/10W
R303	1-216-065-91	s	METAL, CHIP 4.7k 5% 1/10W
R304	1-216-049-91	s	METAL, CHIP 1k 5% 1/10W
R305	1-216-049-91	s	METAL, CHIP 1k 5% 1/10W
R306	1-216-033-00	s	METAL, CHIP 220 5% 1/10W
R307	1-216-057-00	s	METAL, CHIP 2.2k 5% 1/10W
R308	1-216-057-00	s	METAL, CHIP 2.2k 5% 1/10W
R309	1-216-049-91	s	METAL, CHIP 1k 5% 1/10W
R310	1-216-049-91	s	METAL, CHIP 1k 5% 1/10W
R311	1-208-790-11	s	METAL, CHIP 2.2k 0.5% 1/10W
R312	1-208-758-11	s	METAL, CHIP 100 0.5% 1/10W
R313	1-216-295-91	s	RES, CHIP 0
R314	1-208-792-11	s	METAL, CHIP 2.7k 0.5% 1/10W
R315	1-216-065-91	s	METAL, CHIP 4.7k 5% 1/10W
R316	1-216-025-91	s	METAL, CHIP 100 5% 1/10W
R317	1-208-778-11	s	METAL, CHIP 680 0.5% 1/10W
R318	1-216-017-91	s	METAL, CHIP 47 5% 1/10W
R319	1-208-788-11	s	METAL, CHIP 1.8k 0.5% 1/10W
R320	1-216-065-91	s	METAL, CHIP 4.7k 5% 1/10W
R321	1-216-025-91	s	METAL, CHIP 100 5% 1/10W
R322	1-208-774-11	s	METAL, CHIP 470 0.5% 1/10W
R323	1-208-784-11	s	METAL, CHIP 1.2k 0.5% 1/10W
R324	1-208-774-11	s	METAL, CHIP 470 0.5% 1/10W
R325	1-208-774-11	s	METAL, CHIP 470 0.5% 1/10W
R326	1-208-778-11	s	METAL, CHIP 680 0.5% 1/10W
R327	1-216-065-91	s	METAL, CHIP 4.7k 5% 1/10W
R328	1-208-770-11	s	METAL, CHIP 330 0.5% 1/10W

(IO-149 BOARD(For PAL); Suffix -14)

Ref. No. or Q'ty	Part No.	SP	Description
R329	1-216-049-91	s	METAL, CHIP 1k 5% 1/10W
R330	1-216-033-00	s	METAL, CHIP 220 5% 1/10W
R331	1-216-049-91	s	METAL, CHIP 1k 5% 1/10W
R332	1-216-049-91	s	METAL, CHIP 1k 5% 1/10W
R333	1-216-049-91	s	METAL, CHIP 1k 5% 1/10W
R336	1-216-061-00	s	METAL, CHIP 3.3k 5% 1/10W
R337	1-216-081-00	s	METAL, CHIP 22k 5% 1/10W
R338	1-208-798-11	s	METAL, CHIP 4.7k 0.5% 1/10W
R339	1-216-049-91	s	METAL, CHIP 1k 5% 1/10W
R340	1-208-774-11	s	METAL, CHIP 470 0.5% 1/10W
R341	1-208-774-11	s	METAL, CHIP 470 0.5% 1/10W
R342	1-208-782-11	s	METAL, CHIP 1k 0.5% 1/10W
R343	1-216-053-00	s	METAL, CHIP 1.5k 5% 1/10W
R344	1-216-025-91	s	METAL, CHIP 100 5% 1/10W
R345	1-208-774-11	s	METAL, CHIP 470 0.5% 1/10W
R346	1-216-077-00	s	METAL, CHIP 15k 5% 1/10W
R347	1-216-057-00	s	METAL, CHIP 2.2k 5% 1/10W
R348	1-208-786-11	s	METAL, CHIP 1.5k 0.5% 1/10W
R349	1-216-025-91	s	METAL, CHIP 100 5% 1/10W
R350	1-208-774-11	s	METAL, CHIP 470 0.5% 1/10W
R351	1-216-057-00	s	METAL, CHIP 2.2k 5% 1/10W
R352	1-208-765-11	s	METAL, CHIP 200 0.5% 1/10W
R354	1-216-057-00	s	METAL, CHIP 2.2k 5% 1/10W
R357	1-208-786-11	s	METAL, CHIP 1.5k 0.5% 1/10W
R359	1-216-057-00	s	METAL, CHIP 2.2k 5% 1/10W
R361	1-208-782-11	s	METAL, CHIP 1k 0.5% 1/10W
R362	1-216-025-91	s	METAL, CHIP 100 5% 1/10W
R363	1-216-025-91	s	METAL, CHIP 100 5% 1/10W
R364	1-216-049-91	s	METAL, CHIP 1k 5% 1/10W
R365	1-216-025-91	s	METAL, CHIP 100 5% 1/10W
R366	1-208-782-11	s	METAL, CHIP 1k 0.5% 1/10W
R367	1-208-784-11	s	METAL, CHIP 1.2k 0.5% 1/10W
R368	1-216-049-91	s	METAL, CHIP 1k 5% 1/10W
R369	1-216-049-91	s	METAL, CHIP 1k 5% 1/10W
R370	1-208-782-11	s	METAL, CHIP 1k 0.5% 1/10W
R371	1-216-057-00	s	METAL, CHIP 2.2k 5% 1/10W
R372	1-216-049-91	s	METAL, CHIP 1k 5% 1/10W
R373	1-216-049-91	s	METAL, CHIP 1k 5% 1/10W
R374	1-208-784-11	s	METAL, CHIP 1.2k 0.5% 1/10W
R375	1-208-784-11	s	METAL, CHIP 1.2k 0.5% 1/10W
R376	1-216-049-91	s	METAL, CHIP 1k 5% 1/10W
R377	1-216-049-91	s	METAL, CHIP 1k 5% 1/10W
R378	1-216-065-91	s	METAL, CHIP 4.7k 5% 1/10W
R379	1-216-025-91	s	METAL, CHIP 100 5% 1/10W
R380	1-216-065-91	s	METAL, CHIP 4.7k 5% 1/10W
R381	1-216-025-91	s	METAL, CHIP 100 5% 1/10W
R382	1-216-053-00	s	METAL, CHIP 1.5k 5% 1/10W
R383	1-216-049-91	s	METAL, CHIP 1k 5% 1/10W
R384	1-216-049-91	s	METAL, CHIP 1k 5% 1/10W
R385	1-216-049-91	s	METAL, CHIP 1k 5% 1/10W
R386	1-216-049-91	s	METAL, CHIP 1k 5% 1/10W
R387	1-216-049-91	s	METAL, CHIP 1k 5% 1/10W
R388	1-216-049-91	s	METAL, CHIP 1k 5% 1/10W
R389	1-208-770-11	s	METAL, CHIP 330 0.5% 1/10W
R390	1-208-770-11	s	METAL, CHIP 330 0.5% 1/10W
R391	1-216-057-00	s	METAL, CHIP 2.2k 5% 1/10W
R392	1-216-041-00	s	METAL, CHIP 470 5% 1/10W
R393	1-216-057-00	s	METAL, CHIP 2.2k 5% 1/10W
R394	1-216-025-91	s	METAL, CHIP 100 5% 1/10W

(IO-149 BOARD(For PAL); Suffix -14)

Ref. No. or Q'ty	Part No.	SP	Description
R395	1-216-025-91	s	METAL, CHIP 100 5% 1/10W
R396	1-216-025-91	s	METAL, CHIP 100 5% 1/10W
R397	1-216-025-91	s	METAL, CHIP 100 5% 1/10W
R398	1-216-055-00	s	METAL, CHIP 1.8k 5% 1/10W
R399	1-216-065-91	s	METAL, CHIP 4.7k 5% 1/10W
R400	1-216-065-91	s	METAL, CHIP 4.7k 5% 1/10W
R401	1-216-065-91	s	METAL, CHIP 4.7k 5% 1/10W
R402	1-216-065-91	s	METAL, CHIP 4.7k 5% 1/10W
R403	1-208-800-11	s	METAL, CHIP 5.6k 0.5% 1/10
R404	1-208-790-11	s	METAL, CHIP 2.2k 0.5% 1/10W
R405	1-216-113-00	s	METAL, CHIP 470k 5% 1/10W
R406	1-216-049-91	s	METAL, CHIP 1k 5% 1/10W
R407	1-216-049-91	s	METAL, CHIP 1k 5% 1/10W
R408	1-216-049-91	s	METAL, CHIP 1k 5% 1/10W
R409	1-216-057-00	s	METAL, CHIP 2.2k 5% 1/10W
R410	1-208-800-11	s	METAL, CHIP 5.6k 0.5% 1/10
R411	1-208-790-11	s	METAL, CHIP 2.2k 0.5% 1/10W
R412	1-216-055-00	s	METAL, CHIP 1.8k 5% 1/10W
R413	1-216-057-00	s	METAL, CHIP 2.2k 5% 1/10W
R414	1-216-017-91	s	METAL, CHIP 47 5% 1/10W
R415	1-216-017-91	s	METAL, CHIP 47 5% 1/10W
R416	1-216-073-00	s	METAL, CHIP 10k 5% 1/10W
R417	1-208-774-11	s	METAL, CHIP 470 0.5% 1/10W
R418	1-208-774-11	s	METAL, CHIP 470 0.5% 1/10W
R419	1-208-784-11	s	METAL, CHIP 1.2k 0.5% 1/10W
R420	1-208-774-11	s	METAL, CHIP 470 0.5% 1/10W
R421	1-216-041-00	s	METAL, CHIP 470 5% 1/10W
R422	1-208-784-11	s	METAL, CHIP 1.2k 0.5% 1/10W
R423	1-208-774-11	s	METAL, CHIP 470 0.5% 1/10W
R424	1-208-774-11	s	METAL, CHIP 470 0.5% 1/10W
R425	1-208-794-11	s	METAL, CHIP 3.3k 0.5% 1/10W
R426	1-208-794-11	s	METAL, CHIP 3.3k 0.5% 1/10W
R427	1-216-053-00	s	METAL, CHIP 1.5k 5% 1/10W
R428	1-208-782-11	s	METAL, CHIP 1k 0.5% 1/10W
R429	1-208-770-11	s	METAL, CHIP 330 0.5% 1/10W
R430	1-208-782-11	s	METAL, CHIP 1k 0.5% 1/10W
R431	1-208-770-11	s	METAL, CHIP 330 0.5% 1/10W
R432	1-216-065-91	s	METAL, CHIP 4.7k 5% 1/10W
R433	1-216-065-91	s	METAL, CHIP 4.7k 5% 1/10W
R434	1-208-787-11	s	METAL, CHIP 1.6k 0.5% 1/10W
R435	1-208-788-11	s	METAL, CHIP 1.8k 0.5% 1/10W
R436	1-216-049-91	s	METAL, CHIP 1k 5% 1/10W
R437	1-216-081-00	s	METAL, CHIP 22k 5% 1/10W
R438	1-208-784-11	s	METAL, CHIP 1.2k 0.5% 1/10W
R439	1-208-798-11	s	METAL, CHIP 4.7k 0.5% 1/10W
R440	1-208-782-11	s	METAL, CHIP 1k 0.5% 1/10W
R441	1-208-755-11	s	METAL, CHIP 75 0.5% 1/10W
R442	1-208-755-11	s	METAL, CHIP 75 0.5% 1/10W
R443	1-208-755-11	s	METAL, CHIP 75 0.5% 1/10W
R444	1-208-777-11	s	METAL, CHIP 620 0.5% 1/10W
R445	1-216-045-00	s	METAL, CHIP 680 5% 1/10W
R446	1-216-041-00	s	METAL, CHIP 470 5% 1/10W
R447	1-208-787-11	s	METAL, CHIP 1.6k 0.5% 1/10W
R448	1-216-041-00	s	METAL, CHIP 470 5% 1/10W
R449	1-208-788-11	s	METAL, CHIP 1.8k 0.5% 1/10W
R450	1-208-755-11	s	METAL, CHIP 75 0.5% 1/10W
R451	1-216-097-91	s	METAL, CHIP 100k 5% 1/10W
R452	1-216-073-00	s	METAL, CHIP 10k 5% 1/10W
R453	1-216-081-00	s	METAL, CHIP 22k 5% 1/10W

(IO-149 BOARD(For PAL); Suffix -14)

Ref. No. or Q'ty	Part No.	SP	Description
R454	1-216-095-00	s	METAL, CHIP 82k 5% 1/10W
R455	1-216-073-00	s	METAL, CHIP 10k 5% 1/10W
R456	1-208-755-11	s	METAL, CHIP 75 0.5% 1/10W
R457	1-208-755-11	s	METAL, CHIP 75 0.5% 1/10W
R458	1-208-806-11	s	METAL, CHIP 10k 0.5% 1/10W
R459	1-208-755-11	s	METAL, CHIP 75 0.5% 1/10W
R501	1-216-089-91	s	METAL, CHIP 47k 5% 1/10W
R502	1-208-814-11	s	METAL, CHIP 22k 0.5% 1/10W
R503	1-208-786-11	s	METAL, CHIP 1.5k 0.5% 1/10W
R504	1-208-806-11	s	METAL, CHIP 10k 0.5% 1/10W
R505	1-208-806-11	s	METAL, CHIP 10k 0.5% 1/10W
R507	1-208-786-11	s	METAL, CHIP 1.5k 0.5% 1/10W
R508	1-216-073-00	s	METAL, CHIP 10k 5% 1/10W
R509	1-208-800-11	s	METAL, CHIP 5.6k 0.5% 1/10
R510	1-208-806-11	s	METAL, CHIP 10k 0.5% 1/10W
R511	1-208-798-11	s	METAL, CHIP 4.7k 0.5% 1/10W
R513	1-208-808-11	s	METAL, CHIP 12k 0.5% 1/10W
R515	1-216-057-00	s	METAL, CHIP 2.2k 5% 1/10W
R516	1-208-822-11	s	METAL, CHIP 47k 0.5% 1/10W
R517	1-208-808-11	s	METAL, CHIP 12k 0.5% 1/10W
R518	1-208-810-11	s	METAL, CHIP 15k 0.5% 1/10W
R519	1-208-802-11	s	METAL, CHIP 6.8k 0.5% 1/10W
R520	1-208-810-11	s	METAL, CHIP 15k 0.5% 1/10W
R521	1-216-089-91	s	METAL, CHIP 47k 5% 1/10W
R522	1-216-097-91	s	METAL, CHIP 100k 5% 1/10W
R523	1-216-089-91	s	METAL, CHIP 47k 5% 1/10W
R524	1-208-806-11	s	METAL, CHIP 10k 0.5% 1/10W
R525	1-208-782-11	s	METAL, CHIP 1k 0.5% 1/10W
R526	1-208-806-11	s	METAL, CHIP 10k 0.5% 1/10W
R527	1-208-796-11	s	METAL, CHIP 3.9k 0.5% 1/10W
R528	1-208-808-11	s	METAL, CHIP 12k 0.5% 1/10W
R529	1-216-049-91	s	METAL, CHIP 1k 5% 1/10W
R530	1-216-065-91	s	METAL, CHIP 4.7k 5% 1/10W
R531	1-216-049-91	s	METAL, CHIP 1k 5% 1/10W
R532	1-216-049-91	s	METAL, CHIP 1k 5% 1/10W
R533	1-208-808-11	s	METAL, CHIP 12k 0.5% 1/10W
R534	1-216-051-00	s	METAL, CHIP 1.2k 5% 1/10W
R535	1-208-806-11	s	METAL, CHIP 10k 0.5% 1/10W
R536	1-216-059-00	s	METAL, CHIP 2.7k 5% 1/10W
R537	1-208-774-11	s	METAL, CHIP 470 0.5% 1/10W
R538	1-208-810-11	s	METAL, CHIP 15k 0.5% 1/10W
R539	1-216-049-91	s	METAL, CHIP 1k 5% 1/10W
R540	1-216-057-00	s	METAL, CHIP 2.2k 5% 1/10W
R541	1-208-782-11	s	METAL, CHIP 1k 0.5% 1/10W
R542	1-216-057-00	s	METAL, CHIP 2.2k 5% 1/10W
R543	1-216-073-00	s	METAL, CHIP 10k 5% 1/10W
R544	1-208-782-11	s	METAL, CHIP 1k 0.5% 1/10W
R545	1-208-814-11	s	METAL, CHIP 22k 0.5% 1/10W
R546	1-216-057-00	s	METAL, CHIP 2.2k 5% 1/10W
R547	1-216-017-91	s	METAL, CHIP 47 5% 1/10W
R548	1-208-814-11	s	METAL, CHIP 22k 0.5% 1/10W
R549	1-208-797-11	s	METAL, CHIP 4.3k 0.5% 1/10W
R550	1-208-786-11	s	METAL, CHIP 1.5k 0.5% 1/10W
R551	1-216-097-91	s	METAL, CHIP 100k 5% 1/10W
R552	1-216-059-00	s	METAL, CHIP 2.7k 5% 1/10W
R553	1-208-802-11	s	METAL, CHIP 6.8k 0.5% 1/10W
R554	1-208-786-11	s	METAL, CHIP 1.5k 0.5% 1/10W
R555	1-216-059-00	s	METAL, CHIP 2.7k 5% 1/10W
R556	1-216-073-00	s	METAL, CHIP 10k 5% 1/10W

(IO-149 BOARD(For PAL); Suffix -14)

Ref. No. or Q'ty	Part No.	SP	Description
R557	1-208-814-11	s	METAL, CHIP 22k 0.5% 1/10W
R558	1-216-017-91	s	METAL, CHIP 47 5% 1/10W
R559	1-208-818-11	s	METAL, CHIP 33k 0.5% 1/10W
R560	1-208-810-11	s	METAL, CHIP 15k 0.5% 1/10W
R561	1-208-814-11	s	METAL, CHIP 22k 0.5% 1/10W
R562	1-216-069-00	s	METAL, CHIP 6.8k 5% 1/10W
R563	1-208-818-11	s	METAL, CHIP 33k 0.5% 1/10W
R564	1-208-818-11	s	METAL, CHIP 33k 0.5% 1/10W
R565	1-216-047-91	s	METAL, CHIP 820 5% 1/10W
R566	1-216-049-91	s	METAL, CHIP 1k 5% 1/10W
R567	1-208-822-11	s	METAL, CHIP 47k 0.5% 1/10W
R568	1-216-025-91	s	METAL, CHIP 100 5% 1/10W
R569	1-216-041-00	s	METAL, CHIP 470 5% 1/10W
R570	1-208-800-11	s	METAL, CHIP 5.6k 0.5% 1/10
R571	1-216-081-00	s	METAL, CHIP 22k 5% 1/10W
R572	1-216-049-91	s	METAL, CHIP 1k 5% 1/10W
R573	1-216-059-00	s	METAL, CHIP 2.7k 5% 1/10W
R574	1-208-812-11	s	METAL, CHIP 18k 0.5% 1/10W
R575	1-216-041-00	s	METAL, CHIP 470 5% 1/10W
R576	1-208-755-11	s	METAL, CHIP 75 0.5% 1/10W
R577	1-208-818-11	s	METAL, CHIP 33k 0.5% 1/10W
R579	1-208-850-11	s	METAL, CHIP 680k 0.5% 1/10W
R580	1-216-017-91	s	METAL, CHIP 47 5% 1/10W
R581	1-216-025-91	s	METAL, CHIP 100 5% 1/10W
R582	1-216-061-00	s	METAL, CHIP 3.3k 5% 1/10W
R583	1-216-097-91	s	METAL, CHIP 100k 5% 1/10W
R584	1-216-017-91	s	METAL, CHIP 47 5% 1/10W
R585	1-216-049-91	s	METAL, CHIP 1k 5% 1/10W
R586	1-216-049-91	s	METAL, CHIP 1k 5% 1/10W
R587	1-216-049-91	s	METAL, CHIP 1k 5% 1/10W
R588	1-216-093-00	s	METAL, CHIP 68k 5% 1/10W
R589	1-216-049-91	s	METAL, CHIP 1k 5% 1/10W
R590	1-208-797-11	s	METAL, CHIP 4.3k 0.5% 1/10W
R591	1-216-045-00	s	METAL, CHIP 680 5% 1/10W
R592	1-216-081-00	s	METAL, CHIP 22k 5% 1/10W
R593	1-208-804-11	s	METAL, CHIP 8.2k 0.5% 1/10W
R594	1-216-025-91	s	METAL, CHIP 100 5% 1/10W
R595	1-216-025-91	s	METAL, CHIP 100 5% 1/10W
R596	1-208-774-11	s	METAL, CHIP 470 0.5% 1/10W
R597	1-208-774-11	s	METAL, CHIP 470 0.5% 1/10W
R601	1-216-089-91	s	METAL, CHIP 47k 5% 1/10W
R603	1-216-295-91	s	RES, CHIP 0
R605	1-216-295-91	s	RES, CHIP 0
R606	1-216-073-00	s	METAL, CHIP 10k 5% 1/10W
R607	1-216-065-91	s	METAL, CHIP 4.7k 5% 1/10W
R608	1-216-017-91	s	METAL, CHIP 47 5% 1/10W
R609	1-216-295-91	s	RES, CHIP 0
R610	1-216-049-91	s	METAL, CHIP 1k 5% 1/10W
R612	1-216-085-00	s	METAL, CHIP 33k 5% 1/10W
R614	1-216-073-00	s	METAL, CHIP 10k 5% 1/10W
R615	1-216-065-91	s	METAL, CHIP 4.7k 5% 1/10W
R616	1-216-017-91	s	METAL, CHIP 47 5% 1/10W
R617	1-216-085-00	s	METAL, CHIP 33k 5% 1/10W
R618	1-216-085-00	s	METAL, CHIP 33k 5% 1/10W
R619	1-208-789-11	s	METAL, CHIP 2k 0.5% 1/10W
R620	1-216-051-00	s	METAL, CHIP 1.2k 5% 1/10W
R621	1-208-789-11	s	METAL, CHIP 2k 0.5% 1/10W
R622	1-216-051-00	s	METAL, CHIP 1.2k 5% 1/10W
R623	1-208-774-11	s	METAL, CHIP 470 0.5% 1/10W

(IO-149 BOARD(For PAL); Suffix -14)

Ref. No. or Q'ty	Part No.	SP	Description
R624	1-216-037-00	s	METAL, CHIP 330 5% 1/10W
R625	1-216-648-11	s	METAL, CHIP 750 0.5% 1/10W
R626	1-216-037-00	s	METAL, CHIP 330 5% 1/10W
R627	1-216-071-00	s	METAL, CHIP 8.2k 5% 1/10W
R628	1-208-817-11	s	METAL, CHIP 30k 0.5% 1/10W
R629	1-216-069-00	s	METAL, CHIP 6.8k 5% 1/10W
R630	1-208-817-11	s	METAL, CHIP 30k 0.5% 1/10W
R631	1-216-041-00	s	METAL, CHIP 470 5% 1/10W
R632	1-216-041-00	s	METAL, CHIP 470 5% 1/10W
R633	1-216-017-91	s	METAL, CHIP 47 5% 1/10W
R634	1-216-097-91	s	METAL, CHIP 100k 5% 1/10W
R635	1-208-798-11	s	METAL, CHIP 4.7k 0.5% 1/10W
R637	1-208-850-11	s	METAL, CHIP 680k 0.5% 1/10W
R638	1-208-790-11	s	METAL, CHIP 2.2k 0.5% 1/10W
R639	1-216-017-91	s	METAL, CHIP 47 5% 1/10W
R640	1-208-794-11	s	METAL, CHIP 3.3k 0.5% 1/10W
R641	1-208-781-11	s	METAL, CHIP 910 0.5% 1/10W
R642	1-208-796-11	s	METAL, CHIP 3.9k 0.5% 1/10W
R643	1-208-808-11	s	METAL, CHIP 12k 0.5% 1/10W
R644	1-208-766-11	s	METAL, CHIP 220 0.5% 1/10W
R645	1-208-766-11	s	METAL, CHIP 220 0.5% 1/10W
R646	1-216-049-91	s	METAL, CHIP 1k 5% 1/10W
R647	1-216-049-91	s	METAL, CHIP 1k 5% 1/10W
R648	1-216-037-00	s	METAL, CHIP 330 5% 1/10W
R649	1-216-037-00	s	METAL, CHIP 330 5% 1/10W
R650	1-216-049-91	s	METAL, CHIP 1k 5% 1/10W
R651	1-216-049-91	s	METAL, CHIP 1k 5% 1/10W
R652	1-216-025-91	s	METAL, CHIP 100 5% 1/10W
R653	1-216-025-91	s	METAL, CHIP 100 5% 1/10W
R654	1-216-025-91	s	METAL, CHIP 100 5% 1/10W
R655	1-216-049-91	s	METAL, CHIP 1k 5% 1/10W
R656	1-216-049-91	s	METAL, CHIP 1k 5% 1/10W
R657	1-216-025-91	s	METAL, CHIP 100 5% 1/10W
R658	1-216-025-91	s	METAL, CHIP 100 5% 1/10W
R659	1-216-049-91	s	METAL, CHIP 1k 5% 1/10W
RB101	1-239-999-11	s	RESISTOR BLOCK, CHIP 1k x 4
RB102	1-239-998-11	s	RESISTOR BLOCK, CHIP 100 x 4
RB103	1-233-237-11	s	RESISTOR BLOCK, CHIP 100k x 4
RB701	1-233-234-11	s	RESISTOR BLOCK, CHIP 2.2k x 4
RV101	1-237-034-11	s	RES, ADJ, METAL 2k
RV102	1-237-034-11	s	RES, ADJ, METAL 2k
RV103	1-237-034-11	s	RES, ADJ, METAL 2k
RV105	1-237-035-11	s	RES, ADJ, METAL 5k
RV106	1-237-035-11	s	RES, ADJ, METAL 5k
RV107	1-237-036-11	s	RES, ADJ, METAL 10k
RV108	1-237-036-11	s	RES, ADJ, METAL 10k
RV109	1-237-036-11	s	RES, ADJ, METAL 10k
RV110	1-237-035-11	s	RES, ADJ, METAL 5k
RV111	1-237-035-11	s	RES, ADJ, METAL 5k
RV112	1-237-034-11	s	RES, ADJ, METAL 2k
RV301	1-237-033-11	s	RES, ADJ, METAL 1k
RV302	1-237-034-11	s	RES, ADJ, METAL 2k
RV303	1-237-032-11	s	RES, ADJ, METAL 500
RV304	1-237-033-11	s	RES, ADJ, METAL 1k
RV305	1-237-035-11	s	RES, ADJ, METAL 5k
RV306	1-237-033-11	s	RES, ADJ, METAL 1k
RV307	1-237-033-11	s	RES, ADJ, METAL 1k
RV308	1-237-032-11	s	RES, ADJ, METAL 500
RV309	1-237-034-11	s	RES, ADJ, METAL 2k

(IO-149 BOARD(For PAL); Suffix -14)

Ref. No. or Q'ty	Part No.	SP	Description
RV310	1-237-034-11	s	RES, ADJ, METAL 2k
RV311	1-237-032-11	s	RES, ADJ, METAL 500
RV312	1-237-035-11	s	RES, ADJ, METAL 5k
RV313	1-237-035-11	s	RES, ADJ, METAL 5k
RV314	1-237-032-11	s	RES, ADJ, METAL 500
RV315	1-237-032-11	s	RES, ADJ, METAL 500
RV316	1-237-033-11	s	RES, ADJ, METAL 1k
RV317	1-237-033-11	s	RES, ADJ, METAL 1k
RV318	1-237-030-11	s	RES, ADJ, METAL 100
RV319	1-237-030-11	s	RES, ADJ, METAL 100
RV501	1-237-035-11	s	RES, ADJ, METAL 5k
RV502	1-237-036-11	s	RES, ADJ, METAL 10k
RV503	1-237-037-11	s	RES, ADJ, METAL 20k
RV504	1-237-036-11	s	RES, ADJ, METAL 10k
RV505	1-237-034-11	s	RES, ADJ, METAL 2k
RV506	1-237-033-11	s	RES, ADJ, METAL 1k
RV601	1-237-035-11	s	RES, ADJ, METAL 5k
TH101	1-809-352-11	s	THERMISTOR, CHIP 1.5k
X101	1-767-260-11	s	CRYSTAL 13.50MHz
X102	1-767-260-11	s	CRYSTAL 13.50MHz
X103	1-767-260-11	s	CRYSTAL 13.50MHz
X601	1-767-262-11	s	CRYSTAL 27.00MHz
X602	1-760-457-11	s	CRYSTAL 17.7345MHz

IO-149 BOARD(For PAL); Suffix -12, 13

Ref. No. or Q'ty	Part No.	SP	Description

This list corresponds to the board suffix numbers -12 and -13.

The parts marked * are different, depending on the product serial numbers, as shown below:
*1) Serial number; 10001 through 10650 (For DSR-60P CE)
*2) Serial number; 10651 and higher (For DSR-60P CE)
*3) Serial number; 10001 through 10800 (For DSR-60P CE)
*4) Serial number; 10801 and higher (For DSR-60P CE)
*5) Serial number; 10651 through 11100 (For DSR-60P CE)
*6) Serial number; 11101 and higher (For DSR-60P CE)

Ref. No. or Q'ty	Part No.	SP	Description
1pc	A-8312-962-A	o	MOUNTED CIRCUIT BOARD, IO-149C
1pc	7-621-759-45	s	+PSW, 2.6x6
1pc	3-179-085-01	s	LEVER (L), PRINTED CIRCUIT BOARD
1pc	3-179-084-01	s	LEVER (R), PRINTED CIRCUIT BOARD
C1	1-126-392-11	s	ELECT, CHIP 100uF 20% 6.3V
C2	1-163-038-91	s	CERAMIC, CHIP 0.1uF 25V
C3	1-126-392-11	s	ELECT, CHIP 100uF 20% 6.3V
C4	1-163-038-91	s	CERAMIC, CHIP 0.1uF 25V
C5	1-126-392-11	s	ELECT, CHIP 100uF 20% 6.3V
C6	1-163-038-91	s	CERAMIC, CHIP 0.1uF 25V
C11	1-126-396-11	s	ELECT, CHIP 47uF 20% 16V
C12	1-163-038-91	s	CERAMIC, CHIP 0.1uF 25V
C13	1-126-396-11	s	ELECT, CHIP 47uF 20% 16V
C14	1-163-038-91	s	CERAMIC, CHIP 0.1uF 25V
C15	1-126-396-11	s	ELECT, CHIP 47uF 20% 16V
C16	1-163-038-91	s	CERAMIC, CHIP 0.1uF 25V
C21	1-126-396-11	s	ELECT, CHIP 47uF 20% 16V
C22	1-163-038-91	s	CERAMIC, CHIP 0.1uF 25V
C23	1-126-396-11	s	ELECT, CHIP 47uF 20% 16V
C24	1-163-038-91	s	CERAMIC, CHIP 0.1uF 25V
C25	1-126-396-11	s	ELECT, CHIP 47uF 20% 16V
C26	1-163-038-91	s	CERAMIC, CHIP 0.1uF 25V
C31	1-126-396-11	s	ELECT, CHIP 47uF 20% 16V
C32	1-163-038-91	s	CERAMIC, CHIP 0.1uF 25V
C33	1-126-396-11	s	ELECT, CHIP 47uF 20% 16V
C34	1-163-038-91	s	CERAMIC, CHIP 0.1uF 25V
C35	1-126-396-11	s	ELECT, CHIP 47uF 20% 16V
C36	1-163-038-91	s	CERAMIC, CHIP 0.1uF 25V
C37	1-126-396-11	s	ELECT, CHIP 47uF 20% 16V
C38	1-163-038-91	s	CERAMIC, CHIP 0.1uF 25V
C39	1-126-396-11	s	ELECT, CHIP 47uF 20% 16V
C40	1-163-038-91	s	CERAMIC, CHIP 0.1uF 25V
C101	1-164-004-11	s	CERAMIC, CHIP 0.1uF 10% 25V
C102	1-163-037-11	s	CERAMIC, CHIP 0.022uF 10% 25V
C103	1-126-396-11	s	ELECT, CHIP 47uF 20% 16V
C104	1-163-037-11	s	CERAMIC, CHIP 0.022uF 10% 25V
C105	1-163-037-11	s	CERAMIC, CHIP 0.022uF 10% 25V
C106	1-163-037-11	s	CERAMIC, CHIP 0.022uF 10% 25V
C107	1-163-037-11	s	CERAMIC, CHIP 0.022uF 10% 25V
C108	1-163-235-11	s	CERAMIC, CHIP 22pF 5% 50V
C109	1-163-037-11	s	CERAMIC, CHIP 0.022uF 10% 25V
C110	1-164-004-11	s	CERAMIC, CHIP 0.1uF 10% 25V
C111	1-164-004-11	s	CERAMIC, CHIP 0.1uF 10% 25V
C112	1-163-275-11	s	CERAMIC, CHIP 0.001uF 5% 50V
C113	1-163-275-11	s	CERAMIC, CHIP 0.001uF 5% 50V
C114	1-164-004-11	s	CERAMIC, CHIP 0.1uF 10% 25V
C115	1-164-004-11	s	CERAMIC, CHIP 0.1uF 10% 25V
C116	1-163-275-11	s	CERAMIC, CHIP 0.001uF 5% 50V

(IO-149 BOARD(For PAL); Suffix -12, 13)

Ref. No. or Q'ty	Part No.	SP	Description
C117	1-163-275-11	s	CERAMIC, CHIP 0.001uF 5% 50V
C118	1-163-237-11	s	CERAMIC, CHIP 27pF 5% 50V
C119	1-163-237-11	s	CERAMIC, CHIP 27pF 5% 50V
C120	1-163-037-11	s	CERAMIC, CHIP 0.022uF 10% 25V
C121	1-163-037-11	s	CERAMIC, CHIP 0.022uF 10% 25V
C122	1-163-037-11	s	CERAMIC, CHIP 0.022uF 10% 25V
C123	1-164-004-11	s	CERAMIC, CHIP 0.1uF 10% 25V
C124	1-163-037-11	s	CERAMIC, CHIP 0.022uF 10% 25V
C125	1-126-392-11	s	ELECT, CHIP 100uF 20% 6.3V
C126	1-163-275-11	s	CERAMIC, CHIP 0.001uF 5% 50V
C127	1-164-004-11	s	CERAMIC, CHIP 0.1uF 10% 25V
C128	1-163-037-11	s	CERAMIC, CHIP 0.022uF 10% 25V
C129	1-163-037-11	s	CERAMIC, CHIP 0.022uF 10% 25V
C130	1-163-275-11	s	CERAMIC, CHIP 0.001uF 5% 50V
C131	1-163-037-11	s	CERAMIC, CHIP 0.022uF 10% 25V
C132	1-163-037-11	s	CERAMIC, CHIP 0.022uF 10% 25V
C133	1-163-237-11	s	CERAMIC, CHIP 27pF 5% 50V
C134	1-126-394-11	s	ELECT, CHIP 10uF 20% 16V
C135	1-126-394-11	s	ELECT, CHIP 10uF 20% 16V
C136	1-163-037-11	s	CERAMIC, CHIP 0.022uF 10% 25V
C137	1-163-037-11	s	CERAMIC, CHIP 0.022uF 10% 25V
C138	1-163-037-11	s	CERAMIC, CHIP 0.022uF 10% 25V
C139	1-163-037-11	s	CERAMIC, CHIP 0.022uF 10% 25V
C140	1-163-037-11	s	CERAMIC, CHIP 0.022uF 10% 25V
C141	1-163-037-11	s	CERAMIC, CHIP 0.022uF 10% 25V
C142	1-126-392-11	s	ELECT, CHIP 100uF 20% 6.3V
C143	1-126-392-11	s	ELECT, CHIP 100uF 20% 6.3V
C144	1-163-037-11	s	CERAMIC, CHIP 0.022uF 10% 25V
C145	1-163-037-11	s	CERAMIC, CHIP 0.022uF 10% 25V
C146	1-163-037-11	s	CERAMIC, CHIP 0.022uF 10% 25V
C147	1-163-037-11	s	CERAMIC, CHIP 0.022uF 10% 25V
C148	1-163-037-11	s	CERAMIC, CHIP 0.022uF 10% 25V
C149	1-163-037-11	s	CERAMIC, CHIP 0.022uF 10% 25V
C150	1-163-037-11	s	CERAMIC, CHIP 0.022uF 10% 25V
C151	1-163-037-11	s	CERAMIC, CHIP 0.022uF 10% 25V
C152	1-163-037-11	s	CERAMIC, CHIP 0.022uF 10% 25V
C153	1-126-391-11	s	ELECT, CHIP 47uF 20% 6.3V
C154	1-163-231-11	s	CERAMIC, CHIP 15pF 5% 50V
C155	1-163-037-11	s	CERAMIC, CHIP 0.022uF 10% 25V
C156	1-163-038-91	s	CERAMIC, CHIP 0.1uF 25V
C157	1-163-037-11	s	CERAMIC, CHIP 0.022uF 10% 25V
C158	1-163-037-11	s	CERAMIC, CHIP 0.022uF 10% 25V
C159	1-163-038-91	s	CERAMIC, CHIP 0.1uF 25V
C160	1-163-037-11	s	CERAMIC, CHIP 0.022uF 10% 25V
C161	1-163-037-11	s	CERAMIC, CHIP 0.022uF 10% 25V
C162	1-163-038-91	s	CERAMIC, CHIP 0.1uF 25V
C163	1-163-038-91	s	CERAMIC, CHIP 0.1uF 25V
C164	1-163-038-91	s	CERAMIC, CHIP 0.1uF 25V
C165	1-126-391-11	s	ELECT, CHIP 47uF 20% 6.3V
C166	1-163-037-11	s	CERAMIC, CHIP 0.022uF 10% 25V
C167	1-126-391-11	s	ELECT, CHIP 47uF 20% 6.3V
C168	1-163-037-11	s	CERAMIC, CHIP 0.022uF 10% 25V
C169	1-163-037-11	s	CERAMIC, CHIP 0.022uF 10% 25V
C170	1-163-037-11	s	CERAMIC, CHIP 0.022uF 10% 25V
C171	1-126-391-11	s	ELECT, CHIP 47uF 20% 6.3V
C172	1-126-396-11	s	ELECT, CHIP 47uF 20% 16V
C173	1-126-396-11	s	ELECT, CHIP 47uF 20% 16V
C174	1-126-391-11	s	ELECT, CHIP 47uF 20% 6.3V
C175	1-126-391-11	s	ELECT, CHIP 47uF 20% 6.3V

(IO-149 BOARD(For PAL); Suffix -12, 13)

Ref. No. or Q'ty	Part No.	SP	Description	
C176	1-126-391-11	s	ELECT, CHIP 47uF 20% 6.3V	
C177	1-126-391-11	s	ELECT, CHIP 47uF 20% 6.3V	
C178	1-126-391-11	s	ELECT, CHIP 47uF 20% 6.3V	
C179	1-163-037-11	s	CERAMIC, CHIP 0.022uF 10% 25V	
C180	1-163-037-11	s	CERAMIC, CHIP 0.022uF 10% 25V	
C181	1-163-037-11	s	CERAMIC, CHIP 0.022uF 10% 25V	
C182	1-163-037-11	s	CERAMIC, CHIP 0.022uF 10% 25V	
C183	1-163-037-11	s	CERAMIC, CHIP 0.022uF 10% 25V	
C184	1-163-037-11	s	CERAMIC, CHIP 0.022uF 10% 25V	
C185	1-163-037-11	s	CERAMIC, CHIP 0.022uF 10% 25V	
C186	1-163-037-11	s	CERAMIC, CHIP 0.022uF 10% 25V	
C187	1-163-037-11	s	CERAMIC, CHIP 0.022uF 10% 25V	
C190	1-163-099-00	s	CERAMIC, CHIP 18pF 5% 50V	*1)
	1-163-231-11	s	CERAMIC, CHIP 15pF 5% 50V	*5)
	1-163-099-00	s	CERAMIC, CHIP 18pF 5% 50V	*6)
C191	1-163-037-11	s	CERAMIC, CHIP 0.022uF 10% 25V	
C192	1-163-037-11	s	CERAMIC, CHIP 0.022uF 10% 25V	
C193	1-163-037-11	s	CERAMIC, CHIP 0.022uF 10% 25V	
C194	1-126-401-11	s	ELECT, CHIP 1uF 20% 50V	
C195	1-126-401-11	s	ELECT, CHIP 1uF 20% 50V	
C196	1-126-394-11	s	ELECT, CHIP 10uF 20% 16V	
C197	1-126-401-11	s	ELECT, CHIP 1uF 20% 50V	
C198	1-126-394-11	s	ELECT, CHIP 10uF 20% 16V	
C199	1-163-038-91	s	CERAMIC, CHIP 0.1uF 25V	
C200	1-126-401-11	s	ELECT, CHIP 1uF 20% 50V	
C201	1-163-038-91	s	CERAMIC, CHIP 0.1uF 25V	
C202	1-163-809-11	s	CERAMIC, CHIP 0.047uF 10% 25V	
C203	1-163-809-11	s	CERAMIC, CHIP 0.047uF 10% 25V	
C204	1-163-809-11	s	CERAMIC, CHIP 0.047uF 10% 25V	
C205	1-163-227-11	s	CERAMIC, CHIP 10pF 5% 50V	
C206	1-163-037-11	s	CERAMIC, CHIP 0.022uF 10% 25V	
C207	1-163-037-11	s	CERAMIC, CHIP 0.022uF 10% 25V	
C208	1-163-037-11	s	CERAMIC, CHIP 0.022uF 10% 25V	
C209	1-163-037-11	s	CERAMIC, CHIP 0.022uF 10% 25V	
C210	1-163-037-11	s	CERAMIC, CHIP 0.022uF 10% 25V	
C211	1-126-396-11	s	ELECT, CHIP 47uF 20% 16V	
C212	1-163-037-11	s	CERAMIC, CHIP 0.022uF 10% 25V	
C213	1-163-227-11	s	CERAMIC, CHIP 10pF 5% 50V	*3)
	1-163-235-11	s	CERAMIC, CHIP 22pF 5% 50V	*4)
C214	1-163-037-11	s	CERAMIC, CHIP 0.022uF 10% 25V	
C215	1-126-396-11	s	ELECT, CHIP 47uF 20% 16V	
C216	1-163-037-11	s	CERAMIC, CHIP 0.022uF 10% 25V	
C217	1-126-390-11	s	ELECT, CHIP 22uF 20% 6.3V	
C218	1-163-037-11	s	CERAMIC, CHIP 0.022uF 10% 25V	
C219	1-163-037-11	s	CERAMIC, CHIP 0.022uF 10% 25V	
C220	1-163-181-00	s	CERAMIC, CHIP 100pF 5% 50V	*3)
	1-163-251-11	s	CERAMIC, CHIP 100pF 5% 50V	*4)
C221	1-163-243-11	s	CERAMIC, CHIP 47pF 5% 50V	
C222	1-163-227-11	s	CERAMIC, CHIP 10pF 5% 50V	
C223	1-163-121-00	s	CERAMIC, CHIP 150pF 5% 50V	
C224	1-163-037-11	s	CERAMIC, CHIP 0.022uF 10% 25V	
C225	1-163-087-00	s	CERAMIC, CHIP 4pF 50V	
C226	1-163-037-11	s	CERAMIC, CHIP 0.022uF 10% 25V	
C227	1-163-227-11	s	CERAMIC, CHIP 10pF 5% 50V	
C228	1-163-231-11	s	CERAMIC, CHIP 15pF 5% 50V	
C229	1-163-259-91	s	CERAMIC, CHIP 220pF 5% 50V	

(IO-149 BOARD(For PAL); Suffix -12, 13)

Ref. No. or Q'ty	Part No.	SP	Description
C230	1-126-390-11	s	ELECT, CHIP 22uF 20% 6.3V
C231	1-163-037-11	s	CERAMIC, CHIP 0.022uF 10% 25V
C232	1-163-037-11	s	CERAMIC, CHIP 0.022uF 10% 25V
C233	1-163-037-11	s	CERAMIC, CHIP 0.022uF 10% 25V
C234	1-163-037-11	s	CERAMIC, CHIP 0.022uF 10% 25V
C235	1-163-227-11	s	CERAMIC, CHIP 10pF 5% 50V
C301	1-126-391-11	s	ELECT, CHIP 47uF 20% 6.3V
C302	1-126-391-11	s	ELECT, CHIP 47uF 20% 6.3V
C303	1-163-038-91	s	CERAMIC, CHIP 0.1uF 25V
C304	1-126-391-11	s	ELECT, CHIP 47uF 20% 6.3V
C305	1-126-391-11	s	ELECT, CHIP 47uF 20% 6.3V
C306	1-163-038-91	s	CERAMIC, CHIP 0.1uF 25V
C307	1-163-038-91	s	CERAMIC, CHIP 0.1uF 25V
C308	1-163-038-91	s	CERAMIC, CHIP 0.1uF 25V
C309	1-163-231-11	s	CERAMIC, CHIP 15pF 5% 50V
C310	1-163-037-11	s	CERAMIC, CHIP 0.022uF 10% 25V
C311	1-163-259-91	s	CERAMIC, CHIP 220pF 5% 50V
C312	1-163-037-11	s	CERAMIC, CHIP 0.022uF 10% 25V
C313	1-163-038-91	s	CERAMIC, CHIP 0.1uF 25V
C314	1-163-038-91	s	CERAMIC, CHIP 0.1uF 25V
C315	1-163-037-11	s	CERAMIC, CHIP 0.022uF 10% 25V
C316	1-163-037-11	s	CERAMIC, CHIP 0.022uF 10% 25V
C317	1-163-037-11	s	CERAMIC, CHIP 0.022uF 10% 25V
C318	1-163-231-11	s	CERAMIC, CHIP 15pF 5% 50V
C319	1-163-259-91	s	CERAMIC, CHIP 220pF 5% 50V
C320	1-163-037-11	s	CERAMIC, CHIP 0.022uF 10% 25V
C321	1-126-391-11	s	ELECT, CHIP 47uF 20% 6.3V
C324	1-163-038-91	s	CERAMIC, CHIP 0.1uF 25V
C326	1-126-396-11	s	ELECT, CHIP 47uF 20% 16V
C327	1-126-391-11	s	ELECT, CHIP 47uF 20% 6.3V
C328	1-163-037-11	s	CERAMIC, CHIP 0.022uF 10% 25V
C329	1-126-396-11	s	ELECT, CHIP 47uF 20% 16V
C330	1-163-037-11	s	CERAMIC, CHIP 0.022uF 10% 25V
C331	1-126-396-11	s	ELECT, CHIP 47uF 20% 16V
C332	1-163-038-91	s	CERAMIC, CHIP 0.1uF 25V
C333	1-163-038-91	s	CERAMIC, CHIP 0.1uF 25V
C334	1-163-222-11	s	CERAMIC, CHIP 5pF 50V
C335	1-163-231-11	s	CERAMIC, CHIP 15pF 5% 50V
C336	1-163-037-11	s	CERAMIC, CHIP 0.022uF 10% 25V
C337	1-163-231-11	s	CERAMIC, CHIP 15pF 5% 50V
C338	1-163-038-91	s	CERAMIC, CHIP 0.1uF 25V
C339	1-163-243-11	s	CERAMIC, CHIP 47pF 5% 50V
C340	1-163-243-11	s	CERAMIC, CHIP 47pF 5% 50V
C341	1-163-239-11	s	CERAMIC, CHIP 33pF 5% 50V
C342	1-163-239-11	s	CERAMIC, CHIP 33pF 5% 50V
C343	1-126-392-11	s	ELECT, CHIP 100uF 20% 6.3V
C344	1-163-237-11	s	CERAMIC, CHIP 27pF 5% 50V
C345	1-163-237-11	s	CERAMIC, CHIP 27pF 5% 50V
C346	1-126-394-11	s	ELECT, CHIP 10uF 20% 16V
C347	1-126-394-11	s	ELECT, CHIP 10uF 20% 16V
C348	1-126-391-11	s	ELECT, CHIP 47uF 20% 6.3V
C349	1-163-809-11	s	CERAMIC, CHIP 0.047uF 10% 25V
C350	1-126-391-11	s	ELECT, CHIP 47uF 20% 6.3V
C351	1-163-038-91	s	CERAMIC, CHIP 0.1uF 25V
C352	1-163-037-11	s	CERAMIC, CHIP 0.022uF 10% 25V
C353	1-163-037-11	s	CERAMIC, CHIP 0.022uF 10% 25V
C354	1-163-038-91	s	CERAMIC, CHIP 0.1uF 25V
C355	1-163-227-11	s	CERAMIC, CHIP 10pF 5% 50V
C356	1-163-037-11	s	CERAMIC, CHIP 0.022uF 10% 25V

(IO-149 BOARD(For PAL); Suffix -12, 13)

Ref. No. or Q'ty	Part No.	SP	Description	
C357	1-163-037-11	s	CERAMIC, CHIP 0.022uF 10% 25V	
C358	1-163-037-11	s	CERAMIC, CHIP 0.022uF 10% 25V	
C359	1-163-038-91	s	CERAMIC, CHIP 0.1uF 25V	
C360	1-163-038-91	s	CERAMIC, CHIP 0.1uF 25V	
C361	1-163-038-91	s	CERAMIC, CHIP 0.1uF 25V	
C362	1-163-237-11	s	CERAMIC, CHIP 27pF 5% 50V	
C363	1-163-037-11	s	CERAMIC, CHIP 0.022uF 10% 25V	
C364	1-163-037-11	s	CERAMIC, CHIP 0.022uF 10% 25V	
C365	1-163-222-11	s	CERAMIC, CHIP 5pF 50V	
C366	1-163-037-11	s	CERAMIC, CHIP 0.022uF 10% 25V	
C367	1-163-243-11	s	CERAMIC, CHIP 47pF 5% 50V	
C368	1-163-037-11	s	CERAMIC, CHIP 0.022uF 10% 25V	
C369	1-163-037-11	s	CERAMIC, CHIP 0.022uF 10% 25V	
C370	1-163-037-11	s	CERAMIC, CHIP 0.022uF 10% 25V	
C371	1-163-037-11	s	CERAMIC, CHIP 0.022uF 10% 25V	
C372	1-163-037-11	s	CERAMIC, CHIP 0.022uF 10% 25V	
C373	1-126-391-11	s	ELECT, CHIP 47uF 20% 6.3V	
C374	1-163-037-11	s	CERAMIC, CHIP 0.022uF 10% 25V	
C375	1-163-037-11	s	CERAMIC, CHIP 0.022uF 10% 25V	
C376	1-163-037-11	s	CERAMIC, CHIP 0.022uF 10% 25V	
C377	1-126-391-11	s	ELECT, CHIP 47uF 20% 6.3V	
C378	1-126-396-11	s	ELECT, CHIP 47uF 20% 16V	
C379	1-163-037-11	s	CERAMIC, CHIP 0.022uF 10% 25V	
C380	1-163-037-11	s	CERAMIC, CHIP 0.022uF 10% 25V	
C381	1-163-227-11	s	CERAMIC, CHIP 10pF 5% 50V	
C382	1-163-037-11	s	CERAMIC, CHIP 0.022uF 10% 25V	
C383	1-163-227-11	s	CERAMIC, CHIP 10pF 5% 50V	
C384	1-163-037-11	s	CERAMIC, CHIP 0.022uF 10% 25V	
C385	1-163-038-91	s	CERAMIC, CHIP 0.1uF 25V	
C386	1-163-038-91	s	CERAMIC, CHIP 0.1uF 25V	
C387	1-163-037-11	s	CERAMIC, CHIP 0.022uF 10% 25V	
C388	1-163-113-00	s	CERAMIC, CHIP 68pF 5% 50V	*1)
	1-163-245-11	s	CERAMIC, CHIP 56pF 5% 50V	*5)
	1-163-113-00	s	CERAMIC, CHIP 68pF 5% 50V	*6)
C501	1-163-239-11	s	CERAMIC, CHIP 33pF 5% 50V	
C502	1-163-038-91	s	CERAMIC, CHIP 0.1uF 25V	
C503	1-126-394-11	s	ELECT, CHIP 10uF 20% 16V	
C504	1-126-394-11	s	ELECT, CHIP 10uF 20% 16V	
C505	1-126-394-11	s	ELECT, CHIP 10uF 20% 16V	
C506	1-163-037-11	s	CERAMIC, CHIP 0.022uF 10% 25V	
C507	1-126-396-11	s	ELECT, CHIP 47uF 20% 16V	
C508	1-126-396-11	s	ELECT, CHIP 47uF 20% 16V	
C509	1-126-394-11	s	ELECT, CHIP 10uF 20% 16V	
C510	1-126-394-11	s	ELECT, CHIP 10uF 20% 16V	
C511	1-126-401-11	s	ELECT, CHIP 1uF 20% 50V	
C512	1-163-235-11	s	CERAMIC, CHIP 22pF 5% 50V	
C513	1-164-222-11	s	CERAMIC, CHIP 0.22uF 25V	
C514	1-163-038-91	s	CERAMIC, CHIP 0.1uF 25V	
C515	1-163-038-91	s	CERAMIC, CHIP 0.1uF 25V	
C516	1-163-259-91	s	CERAMIC, CHIP 220pF 5% 50V	
C517	1-164-232-11	s	CERAMIC, CHIP 0.01uF 10% 100V	
C518	1-163-037-11	s	CERAMIC, CHIP 0.022uF 10% 25V	
C519	1-163-038-91	s	CERAMIC, CHIP 0.1uF 25V	
C520	1-163-038-91	s	CERAMIC, CHIP 0.1uF 25V	
C521	1-126-396-11	s	ELECT, CHIP 47uF 20% 16V	
C522	1-126-393-11	s	ELECT, CHIP 33uF 20% 10V	
C523	1-163-038-91	s	CERAMIC, CHIP 0.1uF 25V	
C524	1-163-239-11	s	CERAMIC, CHIP 33pF 5% 50V	

(IO-149 BOARD(For PAL); Suffix -12, 13)

Ref. No. or Q'ty	Part No.	SP	Description	
C525	1-163-259-91	s	CERAMIC, CHIP 220pF 5% 50V	
C526	1-163-038-91	s	CERAMIC, CHIP 0.1uF 25V	
C527	1-163-037-11	s	CERAMIC, CHIP 0.022uF 10% 25V	
C528	1-163-038-91	s	CERAMIC, CHIP 0.1uF 25V	
C529	1-163-037-11	s	CERAMIC, CHIP 0.022uF 10% 25V	
C530	1-163-038-91	s	CERAMIC, CHIP 0.1uF 25V	
C531	1-163-038-91	s	CERAMIC, CHIP 0.1uF 25V	
C532	1-163-038-91	s	CERAMIC, CHIP 0.1uF 25V	
C533	1-163-038-91	s	CERAMIC, CHIP 0.1uF 25V	
C534	1-126-391-11	s	ELECT, CHIP 47uF 20% 6.3V	
C535	1-163-038-91	s	CERAMIC, CHIP 0.1uF 25V	
C536	1-163-038-91	s	CERAMIC, CHIP 0.1uF 25V	
C537	1-163-989-11	s	CERAMIC, CHIP 0.033uF 10% 25V	
C538	1-163-121-00	s	CERAMIC, CHIP 150pF 5% 50V	
C539	1-163-038-91	s	CERAMIC, CHIP 0.1uF 25V	
C540	1-163-038-91	s	CERAMIC, CHIP 0.1uF 25V	
C541	1-163-038-91	s	CERAMIC, CHIP 0.1uF 25V	
C543	1-126-391-11	s	ELECT, CHIP 47uF 20% 6.3V	
C544	1-126-391-11	s	ELECT, CHIP 47uF 20% 6.3V	
C545	1-163-038-91	s	CERAMIC, CHIP 0.1uF 25V	
C546	1-163-235-11	s	CERAMIC, CHIP 22pF 5% 50V	
C547	1-163-037-11	s	CERAMIC, CHIP 0.022uF 10% 25V	
C548	1-163-038-91	s	CERAMIC, CHIP 0.1uF 25V	
C549	1-126-391-11	s	ELECT, CHIP 47uF 20% 6.3V	
C550	1-163-251-11	s	CERAMIC, CHIP 100pF 5% 50V	
C551	1-163-037-11	s	CERAMIC, CHIP 0.022uF 10% 25V	
C552	1-163-038-91	s	CERAMIC, CHIP 0.1uF 25V	
C553	1-163-038-91	s	CERAMIC, CHIP 0.1uF 25V	
C554	1-163-133-00	s	CERAMIC, CHIP 470pF 5% 50V	*4)
C601	1-163-037-11	s	CERAMIC, CHIP 0.022uF 10% 25V	
C602	1-163-037-11	s	CERAMIC, CHIP 0.022uF 10% 25V	
C603	1-163-037-11	s	CERAMIC, CHIP 0.022uF 10% 25V	
C604	1-163-275-11	s	CERAMIC, CHIP 0.001uF 5% 50V	
C605	1-126-401-11	s	ELECT, CHIP 1uF 20% 50V	
C606	1-126-404-11	s	ELECT 4.7uF 20% 50V	
C607	1-164-232-11	s	CERAMIC, CHIP 0.01uF 10% 100V	
C608	1-163-037-11	s	CERAMIC, CHIP 0.022uF 10% 25V	
C609	1-163-037-11	s	CERAMIC, CHIP 0.022uF 10% 25V	
C610	1-163-259-91	s	CERAMIC, CHIP 220pF 5% 50V	
C611	1-164-004-11	s	CERAMIC, CHIP 0.1uF 10% 25V	
C612	1-163-227-11	s	CERAMIC, CHIP 10pF 5% 50V	
C613	1-163-106-00	s	CERAMIC, CHIP 36pF 5% 50V	*3)
	1-163-237-11	s	CERAMIC, CHIP 27pF 5% 50V	*4)
C614	1-163-243-11	s	CERAMIC, CHIP 47pF 5% 50V	
C615	1-163-113-00	s	CERAMIC, CHIP 68pF 5% 50V	
C616	1-164-232-11	s	CERAMIC, CHIP 0.01uF 10% 100V	
C617	1-163-121-00	s	CERAMIC, CHIP 150pF 5% 50V	
C618	1-164-232-11	s	CERAMIC, CHIP 0.01uF 10% 100V	
C619	1-163-263-11	s	CERAMIC, CHIP 330pF 5% 50V	
C620	1-163-809-11	s	CERAMIC, CHIP 0.047uF 10% 25V	
C621	1-163-809-11	s	CERAMIC, CHIP 0.047uF 10% 25V	
C622	1-163-038-91	s	CERAMIC, CHIP 0.1uF 25V	
C623	1-163-038-91	s	CERAMIC, CHIP 0.1uF 25V	
C624	1-163-038-91	s	CERAMIC, CHIP 0.1uF 25V	
C625	1-163-037-11	s	CERAMIC, CHIP 0.022uF 10% 25V	
C626	1-163-227-11	s	CERAMIC, CHIP 10pF 5% 50V	
C627	1-126-391-11	s	ELECT, CHIP 47uF 20% 6.3V	
C628	1-163-037-11	s	CERAMIC, CHIP 0.022uF 10% 25V	

(IO-149 BOARD(For PAL); Suffix -12, 13)

Ref. No. or Q'ty	Part No.	SP	Description	
C629	1-126-391-11	s	ELECT, CHIP 47uF 20% 6.3V	
C631	1-163-227-11	s	CERAMIC, CHIP 10pF 5% 50V	
C632	1-126-401-11	s	ELECT, CHIP 1uF 20% 50V	
C633	1-163-037-11	s	CERAMIC, CHIP 0.022uF 10% 25V	
C634	1-163-243-11	s	CERAMIC, CHIP 47pF 5% 50V	
C635	1-163-037-11	s	CERAMIC, CHIP 0.022uF 10% 25V	
C636	1-163-037-11	s	CERAMIC, CHIP 0.022uF 10% 25V	
C637	1-163-037-11	s	CERAMIC, CHIP 0.022uF 10% 25V	
C638	1-163-038-91	s	CERAMIC, CHIP 0.1uF 25V	
C639	1-163-102-00	s	CERAMIC, CHIP 24pF 5% 50V	*3)
	1-163-099-00	s	CERAMIC, CHIP 18pF 5% 50V	*4)
C640	1-163-037-11	s	CERAMIC, CHIP 0.022uF 10% 25V	
C641	1-163-038-91	s	CERAMIC, CHIP 0.1uF 25V	
C642	1-163-037-11	s	CERAMIC, CHIP 0.022uF 10% 25V	
C643	1-163-243-11	s	CERAMIC, CHIP 47pF 5% 50V	
C644	1-163-037-11	s	CERAMIC, CHIP 0.022uF 10% 25V	
C645	1-126-393-11	s	ELECT, CHIP 33uF 20% 10V	
C646	1-163-037-11	s	CERAMIC, CHIP 0.022uF 10% 25V	
C647	1-163-037-11	s	CERAMIC, CHIP 0.022uF 10% 25V	
C648	1-163-037-11	s	CERAMIC, CHIP 0.022uF 10% 25V	
C649	1-163-037-11	s	CERAMIC, CHIP 0.022uF 10% 25V	
C650	1-126-393-11	s	ELECT, CHIP 33uF 20% 10V	
C651	1-163-037-11	s	CERAMIC, CHIP 0.022uF 10% 25V	
C652	1-163-239-11	s	CERAMIC, CHIP 33pF 5% 50V	
C653	1-163-239-11	s	CERAMIC, CHIP 33pF 5% 50V	
C654	1-163-113-00	s	CERAMIC, CHIP 68pF 5% 50V	
C655	1-163-113-00	s	CERAMIC, CHIP 68pF 5% 50V	
C656	1-163-239-11	s	CERAMIC, CHIP 33pF 5% 50V	
C657	1-163-239-11	s	CERAMIC, CHIP 33pF 5% 50V	
C658	1-163-037-11	s	CERAMIC, CHIP 0.022uF 10% 25V	
C659	1-163-037-11	s	CERAMIC, CHIP 0.022uF 10% 25V	
C660	1-163-037-11	s	CERAMIC, CHIP 0.022uF 10% 25V	
C661	1-163-037-11	s	CERAMIC, CHIP 0.022uF 10% 25V	
C663	1-163-133-00	s	CERAMIC, CHIP 470pF 5% 50V	
CT601	1-141-345-11	s	CAP, TRIMMER, CHIP 40pF	
CT602	1-141-345-11	s	CAP, TRIMMER, CHIP 40pF	
D1	8-719-941-04	s	DIODE SB007-03CP	
D2	8-719-941-04	s	DIODE SB007-03CP	
D3	8-719-053-18	s	DIODE 1SR154-400TE-25	
D4	8-719-053-18	s	DIODE 1SR154-400TE-25	
D5	8-719-053-18	s	DIODE 1SR154-400TE-25	
D101	8-719-041-39	s	DIODE KV1470	
D102	8-719-041-39	s	DIODE KV1470	
D103	8-719-041-39	s	DIODE KV1470	
D104	8-719-941-23	s	DIODE DA204U	
D105	8-719-941-23	s	DIODE DA204U	
D106	8-719-989-08	s	DIODE RB717F	
D301	8-719-976-99	s	DIODE DTZ5.1B	
D302	8-719-941-23	s	DIODE DA204U	
D501	8-719-941-23	s	DIODE DA204U	
D601	8-719-002-81	s	DIODE 1T363A-M20-T8A	
D602	8-719-002-81	s	DIODE 1T363A-M20-T8A	
E101	1-535-877-22	o	CHECKER, CHIP	
E102	1-535-877-22	o	CHECKER, CHIP	
E103	1-535-877-22	o	CHECKER, CHIP	
E301	1-535-877-22	o	CHECKER, CHIP	
E501	1-535-877-22	o	CHECKER, CHIP	

(IO-149 BOARD(For PAL); Suffix -12, 13)

Ref. No. or Q'ty	Part No.	SP	Description
E601	1-535-877-22	o	CHECKER, CHIP
F1	⚠ 1-576-124-11	s	LINK, IC, CHIP 1A
F2	⚠ 1-533-282-21	s	LINK, IC, CHIP 2A
F3	⚠ 1-576-124-11	s	LINK, IC, CHIP 1A
F4	⚠ 1-533-282-21	s	LINK, IC, CHIP 2A
F5	⚠ 1-576-124-11	s	LINK, IC, CHIP 1A
F6	⚠ 1-533-282-21	s	LINK, IC, CHIP 2A
FL101	1-233-599-11	s	FILTER, LOW-PASS
FL102	1-233-599-11	s	FILTER, LOW-PASS
FL103	1-233-614-11	s	FILTER, LOW-PASS
FL104	1-239-771-11	s	FILTER, LOW-PASS
FL1001	1-239-719-11	s	FILTER, NOISE, CHIP
FL1002	1-239-719-11	s	FILTER, NOISE, CHIP
FL1003	1-239-719-11	s	FILTER, NOISE, CHIP
IC1	8-759-157-17	s	IC PQ05SZ1U
IC2	8-759-157-17	s	IC PQ05SZ1U
IC3	8-759-172-41	s	IC L78M09T-TL
IC4	8-759-172-41	s	IC L78M09T-TL
IC5	8-759-822-95	s	IC L79M05T-FA
IC6	8-759-822-95	s	IC L79M05T-FA
IC7	8-759-822-95	s	IC L79M05T-FA
IC8	8-759-157-17	s	IC PQ05SZ1U
IC101	8-759-198-63	s	IC S-81230SG-QB-T1
IC102	8-759-278-58	s	IC NJM4558V-TE2
IC103	8-759-278-58	s	IC NJM4558V-TE2
IC105	8-759-278-58	s	IC NJM4558V-TE2
IC107	8-759-076-06	s	IC TL064CPW
IC108	8-759-076-06	s	IC TL064CPW
IC109	8-752-052-77	s	IC CXA1450M
IC110	8-752-363-60	s	IC CXD2307R-T6
IC111	8-759-287-54	s	IC TL084CPW-E20
IC112	8-759-287-54	s	IC TL084CPW-E20
IC113	8-759-287-54	s	IC TL084CPW-E20
IC114	8-759-066-59	s	IC TC74HC4053AFS
IC115	8-752-054-80	s	IC CXA1521M
IC116	8-752-054-80	s	IC CXA1521M
IC117	8-759-906-59	s	IC CX22017
IC118	8-759-907-81	s	IC SN74LS221NS
IC301	8-759-082-59	s	IC TC7W32FU
IC302	8-759-082-61	s	IC TC4W53FU
IC304	8-759-287-54	s	IC TL084CPW-E20
IC305	8-759-082-61	s	IC TC4W53FU
IC306	8-752-052-73	s	IC CXA1451M
IC307	8-752-052-73	s	IC CXA1451M
IC308	8-759-262-00	s	IC MC14576CF
IC309	8-752-052-73	s	IC CXA1451M
IC310	8-752-052-73	s	IC CXA1451M
IC311	8-752-052-73	s	IC CXA1451M
IC312	8-759-082-61	s	IC TC4W53FU
IC501	8-759-082-57	s	IC TC7W04FU
IC502	8-752-052-77	s	IC CXA1450M
IC503	8-752-052-77	s	IC CXA1450M
IC504	8-759-173-16	s	IC TL062CPW
IC505	8-759-076-06	s	IC TL064CPW
IC506	8-759-430-88	s	IC TC74HC4051AFS(EL)
IC507	8-759-324-03	s	IC HA17431UA-TL
IC508	8-759-076-06	s	IC TL064CPW

(IO-149 BOARD(For PAL); Suffix -12, 13)

Ref. No. or Q'ty	Part No.	SP	Description
IC509	8-752-052-77	s	IC CXA1450M
IC510	8-759-262-03	s	IC MC14577CF
IC512	8-759-987-27	s	IC LM1881M
IC513	8-759-079-66	s	IC TC74VHC123AFS(EL)
IC514	8-759-980-04	s	IC LM311PS
IC515	8-759-702-08	s	IC NJM360M
IC516	8-752-052-77	s	IC CXA1450M
IC601	8-759-082-57	s	IC TC7W04FU
IC602	8-759-250-81	s	IC TC5081AP
IC603	8-759-079-67	s	IC TC74VHC125FS(EL)
IC604	8-759-058-57	s	IC TC7S04FU-TE85L
IC605	8-759-357-24	s	IC MC68HC705C8AFU
IC606	8-752-335-47	s	IC CXD1216M
IC607	8-759-066-59	s	IC TC74HC4053AFS
IC608	8-759-241-03	s	IC TC74HC191AF
IC609	8-759-082-57	s	IC TC7W04FU
IC610	8-759-271-86	s	IC TC7SH04FU
IC611	8-759-271-86	s	IC TC7SH04FU
IC612	8-759-079-66	s	IC TC74VHC123AFS(EL)
IC613	8-759-079-80	s	IC TC74VHC175FS(EL)
IC614	8-759-519-49	s	IC CXD8165Q
IC615	8-752-339-46	s	IC CXD1177Q
IC616	8-759-082-57	s	IC TC7W04FU
IC617	8-759-066-59	s	IC TC74HC4053AFS
IC618	8-759-271-86	s	IC TC7SH04FU
IC619	8-759-271-86	s	IC TC7SH04FU
L101	1-414-402-11	s	INDUCTOR, CHIP 47uH
L102	1-414-400-11	s	INDUCTOR, CHIP 22uH
L103	1-414-400-11	s	INDUCTOR, CHIP 22uH
L104	1-414-402-11	s	INDUCTOR, CHIP 47uH
L105	1-414-402-11	s	INDUCTOR, CHIP 47uH
L106	1-414-400-11	s	INDUCTOR, CHIP 22uH
L107	1-414-400-11	s	INDUCTOR, CHIP 22uH
L108	1-414-402-11	s	INDUCTOR, CHIP 47uH
L109	1-414-402-11	s	INDUCTOR, CHIP 47uH
L110	1-414-402-11	s	INDUCTOR, CHIP 47uH
L111	1-414-402-11	s	INDUCTOR, CHIP 47uH
L112	1-414-404-11	s	INDUCTOR, CHIP 100uH
L113	1-414-402-11	s	INDUCTOR, CHIP 47uH
L114	1-414-404-11	s	INDUCTOR, CHIP 100uH
L115	1-410-385-11	s	INDUCTOR, CHIP 22uH
L116	1-410-385-11	s	INDUCTOR, CHIP 22uH
L117	1-410-393-11	s	INDUCTOR, CHIP 100uH
L301	1-414-402-11	s	INDUCTOR, CHIP 47uH
L302	1-414-402-11	s	INDUCTOR, CHIP 47uH
L303	1-414-402-11	s	INDUCTOR, CHIP 47uH
L304	1-414-402-11	s	INDUCTOR, CHIP 47uH
L305	1-410-393-11	s	INDUCTOR, CHIP 100uH
L306	1-410-393-11	s	INDUCTOR, CHIP 100uH
L307	1-414-402-11	s	INDUCTOR, CHIP 47uH
L308	1-414-402-11	s	INDUCTOR, CHIP 47uH
L309	1-414-402-11	s	INDUCTOR, CHIP 47uH
L310	1-410-387-11	s	INDUCTOR, CHIP 33uH
L311	1-410-387-11	s	INDUCTOR, CHIP 33uH
L312	1-414-402-11	s	INDUCTOR, CHIP 47uH
L313	1-414-402-11	s	INDUCTOR, CHIP 47uH
L314	1-410-389-31	s	INDUCTOR, CHIP 47uH
L315	1-410-387-11	s	INDUCTOR, CHIP 33uH

(IO-149 BOARD(For PAL); Suffix -12, 13)

Ref. No. or Q'ty	Part No.	SP	Description
L501	1-410-392-11	s	INDUCTOR, CHIP 82uH
L502	1-410-393-11	s	INDUCTOR, CHIP 100uH
L503	1-414-402-11	s	INDUCTOR, CHIP 47uH
L504	1-414-402-11	s	INDUCTOR, CHIP 47uH
L505	1-410-391-11	s	INDUCTOR, CHIP 68uH
L506	1-414-402-11	s	INDUCTOR, CHIP 47uH
L507	1-414-402-11	s	INDUCTOR, CHIP 47uH
L601	1-414-402-11	s	INDUCTOR, CHIP 47uH
L602	1-414-402-11	s	INDUCTOR, CHIP 47uH
L603	1-414-400-11	s	INDUCTOR, CHIP 22uH
L604	1-414-400-11	s	INDUCTOR, CHIP 22uH
L605	1-410-386-11	s	INDUCTOR, CHIP 27uH
L606	1-410-386-11	s	INDUCTOR, CHIP 27uH
L607	1-410-386-11	s	INDUCTOR, CHIP 27uH
L608	1-410-386-11	s	INDUCTOR, CHIP 27uH
Q101	8-729-117-32	s	TRANSISTOR 2SC4177
Q102	8-729-117-32	s	TRANSISTOR 2SC4177
Q103	8-729-117-32	s	TRANSISTOR 2SC4177
Q104	8-729-140-63	s	TRANSISTOR 2SA1611-M5M6
Q105	8-729-117-32	s	TRANSISTOR 2SC4177
Q106	8-729-117-32	s	TRANSISTOR 2SC4177
Q107	8-729-117-32	s	TRANSISTOR 2SC4177
Q108	8-729-923-06	s	TRANSISTOR FMW-8
Q109	8-729-923-06	s	TRANSISTOR FMW-8
Q110	8-729-923-06	s	TRANSISTOR FMW-8
Q111	8-729-904-04	s	TRANSISTOR FMS2
Q112	8-729-904-04	s	TRANSISTOR FMS2
Q113	8-729-904-04	s	TRANSISTOR FMS2
Q114	8-729-903-82	s	TRANSISTOR FMW2
Q115	8-729-903-82	s	TRANSISTOR FMW2
Q116	8-729-903-82	s	TRANSISTOR FMW2
Q117	8-729-931-46	s	TRANSISTOR FMW7
Q118	8-729-931-46	s	TRANSISTOR FMW7
Q119	8-729-931-46	s	TRANSISTOR FMW7
Q120	8-729-907-26	s	TRANSISTOR IMX1
Q121	8-729-907-26	s	TRANSISTOR IMX1
Q122	8-729-907-26	s	TRANSISTOR IMX1
Q123	8-729-143-14	s	TRANSISTOR 2SC4176-B35
Q124	8-729-117-32	s	TRANSISTOR 2SC4177
Q125	8-729-140-63	s	TRANSISTOR 2SA1611-M5M6
Q126	8-729-117-32	s	TRANSISTOR 2SC4177
Q127	8-729-143-14	s	TRANSISTOR 2SC4176-B35
Q128	8-729-140-63	s	TRANSISTOR 2SA1611-M5M6
Q129	8-729-903-82	s	TRANSISTOR FMW2
Q130	8-729-117-32	s	TRANSISTOR 2SC4177
Q131	8-729-903-82	s	TRANSISTOR FMW2
Q301	8-729-143-14	s	TRANSISTOR 2SC4176-B35
Q302	8-729-904-41	s	TRANSISTOR FMY3
Q303	8-729-140-63	s	TRANSISTOR 2SA1611-M5M6
Q304	8-729-140-63	s	TRANSISTOR 2SA1611-M5M6
Q305	8-729-117-32	s	TRANSISTOR 2SC4177
Q306	8-729-117-32	s	TRANSISTOR 2SC4177
Q307	8-729-907-26	s	TRANSISTOR IMX1
Q308	8-729-117-32	s	TRANSISTOR 2SC4177
Q309	8-729-117-32	s	TRANSISTOR 2SC4177
Q310	8-729-143-14	s	TRANSISTOR 2SC4176-B35
Q311	8-729-117-32	s	TRANSISTOR 2SC4177
Q312	8-729-907-26	s	TRANSISTOR IMX1
Q313	8-729-140-63	s	TRANSISTOR 2SA1611-M5M6

(IO-149 BOARD(For PAL); Suffix -12, 13)

Ref. No. or Q'ty	Part No.	SP	Description
Q314	8-729-140-63	s	TRANSISTOR 2SA1611-M5M6
Q315	8-729-117-32	s	TRANSISTOR 2SC4177
Q316	8-729-140-63	s	TRANSISTOR 2SA1611-M5M6
Q317	8-729-117-32	s	TRANSISTOR 2SC4177
Q318	8-729-904-41	s	TRANSISTOR FMY3
Q319	8-729-904-41	s	TRANSISTOR FMY3
Q320	8-729-117-32	s	TRANSISTOR 2SC4177
Q321	8-729-117-32	s	TRANSISTOR 2SC4177
Q322	8-729-117-32	s	TRANSISTOR 2SC4177
Q323	8-729-143-14	s	TRANSISTOR 2SC4176-B35
Q324	8-729-140-63	s	TRANSISTOR 2SA1611-M5M6
Q325	8-729-140-63	s	TRANSISTOR 2SA1611-M5M6
Q326	8-729-117-32	s	TRANSISTOR 2SC4177
Q327	8-729-117-32	s	TRANSISTOR 2SC4177
Q328	8-729-117-32	s	TRANSISTOR 2SC4177
Q329	8-729-117-32	s	TRANSISTOR 2SC4177
Q330	8-729-117-32	s	TRANSISTOR 2SC4177
Q331	8-729-904-41	s	TRANSISTOR FMY3
Q332	8-729-422-44	s	TRANSISTOR 2SK663
Q333	8-729-422-44	s	TRANSISTOR 2SK663
Q334	8-729-422-44	s	TRANSISTOR 2SK663
Q335	8-729-422-44	s	TRANSISTOR 2SK663
Q336	8-729-140-63	s	TRANSISTOR 2SA1611-M5M6
Q337	8-729-140-63	s	TRANSISTOR 2SA1611-M5M6
Q338	8-729-140-63	s	TRANSISTOR 2SA1611-M5M6
Q339	8-729-140-63	s	TRANSISTOR 2SA1611-M5M6
Q340	8-729-117-32	s	TRANSISTOR 2SC4177
Q341	8-729-907-26	s	TRANSISTOR IMX1
Q342	8-729-907-26	s	TRANSISTOR IMX1
Q343	8-729-117-32	s	TRANSISTOR 2SC4177
Q344	8-729-117-32	s	TRANSISTOR 2SC4177
Q345	8-729-907-26	s	TRANSISTOR IMX1
Q346	8-729-117-32	s	TRANSISTOR 2SC4177
Q347	8-729-907-26	s	TRANSISTOR IMX1
Q348	8-729-117-32	s	TRANSISTOR 2SC4177
Q349	8-729-140-63	s	TRANSISTOR 2SA1611-M5M6
Q350	8-729-140-63	s	TRANSISTOR 2SA1611-M5M6
Q501	8-729-117-32	s	TRANSISTOR 2SC4177
Q502	8-729-117-32	s	TRANSISTOR 2SC4177
Q503	8-729-117-32	s	TRANSISTOR 2SC4177
Q504	8-729-117-32	s	TRANSISTOR 2SC4177
Q505	8-729-117-32	s	TRANSISTOR 2SC4177
Q506	8-729-904-41	s	TRANSISTOR FMY3
Q507	8-729-117-32	s	TRANSISTOR 2SC4177
Q508	8-729-117-32	s	TRANSISTOR 2SC4177
Q509	8-729-117-32	s	TRANSISTOR 2SC4177
Q601	8-729-140-47	s	TRANSISTOR 2SC3735-B34
Q602	8-729-140-47	s	TRANSISTOR 2SC3735-B34
Q603	8-729-140-47	s	TRANSISTOR 2SC3735-B34
Q604	8-729-140-47	s	TRANSISTOR 2SC3735-B34
Q605	8-729-117-32	s	TRANSISTOR 2SC4177
Q606	8-729-117-32	s	TRANSISTOR 2SC4177
Q607	8-729-117-32	s	TRANSISTOR 2SC4177
Q608	8-729-117-32	s	TRANSISTOR 2SC4177
R101	1-216-672-11	s	METAL, CHIP 7.5k 0.5% 1/10W
R102	1-216-665-11	s	METAL, CHIP 3.9k 0.5% 1/10W
R103	1-216-667-11	s	METAL, CHIP 4.7k 0.5% 1/10W
R104	1-216-675-11	s	METAL, CHIP 10k 0.5% 1/10W
R105	1-216-041-00	s	METAL, CHIP 470 5% 1/10W

(IO-149 BOARD(For PAL); Suffix -12, 13)

Ref. No. or Q'ty	Part No.	SP	Description
R106	1-216-295-91	s	RES, CHIP 0
R107	1-216-652-11	s	METAL, CHIP 1.1k 0.5% 1/10W
R108	1-216-668-11	s	METAL, CHIP 5.1k 0.5% 1/10W
R110	1-216-295-91	s	RES, CHIP 0
R112	1-216-295-91	s	RES, CHIP 0
R113	1-216-668-11	s	METAL, CHIP 5.1k 0.5% 1/10W
R114	1-216-665-11	s	METAL, CHIP 3.9k 0.5% 1/10W
R115	1-216-663-11	s	METAL, CHIP 3.3k 0.5% 1/10W
R116	1-216-073-00	s	METAL, CHIP 10k 5% 1/10W
R117	1-216-655-11	s	METAL, CHIP 1.5k 0.5% 1/10W
R118	1-216-657-11	s	METAL, CHIP 1.8k 0.5% 1/10W
R119	1-216-675-11	s	METAL, CHIP 10k 0.5% 1/10W
R120	1-216-675-11	s	METAL, CHIP 10k 0.5% 1/10W
R121	1-216-073-00	s	METAL, CHIP 10k 5% 1/10W
R122	1-216-073-00	s	METAL, CHIP 10k 5% 1/10W
R123	1-216-085-00	s	METAL, CHIP 33k 5% 1/10W
R124	1-216-085-00	s	METAL, CHIP 33k 5% 1/10W
R125	1-216-121-91	s	METAL, CHIP 1M 5% 1/10W
R126	1-216-121-91	s	METAL, CHIP 1M 5% 1/10W
R127	1-216-085-00	s	METAL, CHIP 33k 5% 1/10W
R128	1-216-085-00	s	METAL, CHIP 33k 5% 1/10W
R129	1-216-121-91	s	METAL, CHIP 1M 5% 1/10W
R130	1-216-121-91	s	METAL, CHIP 1M 5% 1/10W
R131	1-216-033-00	s	METAL, CHIP 220 5% 1/10W
R132	1-216-033-00	s	METAL, CHIP 220 5% 1/10W
R133	1-216-053-00	s	METAL, CHIP 1.5k 5% 1/10W
R134	1-216-053-00	s	METAL, CHIP 1.5k 5% 1/10W
R135	1-216-675-11	s	METAL, CHIP 10k 0.5% 1/10W
R136	1-216-073-00	s	METAL, CHIP 10k 5% 1/10W
R137	1-216-081-00	s	METAL, CHIP 22k 5% 1/10W
R138	1-216-121-91	s	METAL, CHIP 1M 5% 1/10W
R139	1-216-085-00	s	METAL, CHIP 33k 5% 1/10W
R140	1-216-121-91	s	METAL, CHIP 1M 5% 1/10W
R141	1-216-033-00	s	METAL, CHIP 220 5% 1/10W
R144	1-216-677-11	s	METAL, CHIP 12k 0.5% 1/10W
R145	1-216-678-11	s	METAL, CHIP 13k 0.5% 1/10W
R146	1-216-678-11	s	METAL, CHIP 13k 0.5% 1/10W
R147	1-216-667-11	s	METAL, CHIP 4.7k 0.5% 1/10W
R148	1-216-678-11	s	METAL, CHIP 13k 0.5% 1/10W
R149	1-216-659-11	s	METAL, CHIP 2.2k 0.5% 1/10W
R150	1-216-673-11	s	METAL, CHIP 8.2k 0.5% 1/10W
R151	1-216-659-11	s	METAL, CHIP 2.2k 0.5% 1/10W
R152	1-216-661-11	s	METAL, CHIP 2.7k 0.5% 1/10W
R153	1-216-661-11	s	METAL, CHIP 2.7k 0.5% 1/10W
R154	1-216-085-00	s	METAL, CHIP 33k 5% 1/10W
R155	1-216-675-11	s	METAL, CHIP 10k 0.5% 1/10W
R156	1-216-675-11	s	METAL, CHIP 10k 0.5% 1/10W
R157	1-216-679-11	s	METAL, CHIP 15k 0.5% 1/10W
R158	1-216-679-11	s	METAL, CHIP 15k 0.5% 1/10W
R159	1-216-659-11	s	METAL, CHIP 2.2k 0.5% 1/10W
R160	1-216-679-11	s	METAL, CHIP 15k 0.5% 1/10W
R161	1-216-679-11	s	METAL, CHIP 15k 0.5% 1/10W
R162	1-216-661-11	s	METAL, CHIP 2.7k 0.5% 1/10W
R163	1-216-679-11	s	METAL, CHIP 15k 0.5% 1/10W
R164	1-216-671-11	s	METAL, CHIP 6.8k 0.5% 1/10W
R165	1-216-671-11	s	METAL, CHIP 6.8k 0.5% 1/10W
R166	1-216-679-11	s	METAL, CHIP 15k 0.5% 1/10W
R167	1-216-663-11	s	METAL, CHIP 3.3k 0.5% 1/10W
R168	1-216-659-11	s	METAL, CHIP 2.2k 0.5% 1/10W

(IO-149 BOARD(For PAL); Suffix -12, 13)

Ref. No. or Q'ty	Part No.	SP	Description
R169	1-216-081-00	s	METAL, CHIP 22k 5% 1/10W
R170	1-216-081-00	s	METAL, CHIP 22k 5% 1/10W
R171	1-216-081-00	s	METAL, CHIP 22k 5% 1/10W
R172	1-216-645-11	s	METAL, CHIP 560 0.5% 1/10W
R173	1-216-665-11	s	METAL, CHIP 3.9k 0.5% 1/10W
R174	1-216-665-11	s	METAL, CHIP 3.9k 0.5% 1/10W
R175	1-216-089-91	s	METAL, CHIP 47k 5% 1/10W
R176	1-216-667-11	s	METAL, CHIP 4.7k 0.5% 1/10W
R177	1-216-089-91	s	METAL, CHIP 47k 5% 1/10W
R178	1-216-089-91	s	METAL, CHIP 47k 5% 1/10W
R179	1-216-639-11	s	METAL, CHIP 330 0.5% 1/10W
R180	1-216-639-11	s	METAL, CHIP 330 0.5% 1/10W
R181	1-216-639-11	s	METAL, CHIP 330 0.5% 1/10W
R182	1-216-639-11	s	METAL, CHIP 330 0.5% 1/10W
R183	1-216-639-11	s	METAL, CHIP 330 0.5% 1/10W
R184	1-216-639-11	s	METAL, CHIP 330 0.5% 1/10W
R185	1-216-045-00	s	METAL, CHIP 680 5% 1/10W
R186	1-216-045-00	s	METAL, CHIP 680 5% 1/10W
R187	1-216-017-91	s	METAL, CHIP 47 5% 1/10W
R188	1-216-017-91	s	METAL, CHIP 47 5% 1/10W
R189	1-216-045-00	s	METAL, CHIP 680 5% 1/10W
R190	1-216-017-91	s	METAL, CHIP 47 5% 1/10W
R191	1-216-017-91	s	METAL, CHIP 47 5% 1/10W
R192	1-216-017-91	s	METAL, CHIP 47 5% 1/10W
R193	1-216-017-91	s	METAL, CHIP 47 5% 1/10W
R194	1-216-057-00	s	METAL, CHIP 2.2k 5% 1/10W
R195	1-216-057-00	s	METAL, CHIP 2.2k 5% 1/10W
R196	1-216-057-00	s	METAL, CHIP 2.2k 5% 1/10W
R197	1-216-049-91	s	METAL, CHIP 1k 5% 1/10W
R198	1-216-049-91	s	METAL, CHIP 1k 5% 1/10W
R199	1-216-049-91	s	METAL, CHIP 1k 5% 1/10W
R200	1-216-049-91	s	METAL, CHIP 1k 5% 1/10W
R201	1-216-049-91	s	METAL, CHIP 1k 5% 1/10W
R202	1-216-049-91	s	METAL, CHIP 1k 5% 1/10W
R203	1-216-057-00	s	METAL, CHIP 2.2k 5% 1/10W
R204	1-216-057-00	s	METAL, CHIP 2.2k 5% 1/10W
R205	1-216-057-00	s	METAL, CHIP 2.2k 5% 1/10W
R206	1-216-033-00	s	METAL, CHIP 220 5% 1/10W
R207	1-216-033-00	s	METAL, CHIP 220 5% 1/10W
R208	1-216-033-00	s	METAL, CHIP 220 5% 1/10W
R209	1-216-045-00	s	METAL, CHIP 680 5% 1/10W
R210	1-216-045-00	s	METAL, CHIP 680 5% 1/10W
R211	1-216-045-00	s	METAL, CHIP 680 5% 1/10W
R212	1-216-077-00	s	METAL, CHIP 15k 5% 1/10W
R213	1-216-077-00	s	METAL, CHIP 15k 5% 1/10W
R214	1-216-077-00	s	METAL, CHIP 15k 5% 1/10W
R215	1-216-027-00	s	METAL, CHIP 120 5% 1/10W
R216	1-216-027-00	s	METAL, CHIP 120 5% 1/10W
R217	1-216-027-00	s	METAL, CHIP 120 5% 1/10W
R220	1-216-295-91	s	RES, CHIP 0
R221	1-216-017-91	s	METAL, CHIP 47 5% 1/10W
R222	1-216-017-91	s	METAL, CHIP 47 5% 1/10W
R223	1-216-017-91	s	METAL, CHIP 47 5% 1/10W
R224	1-216-651-11	s	METAL, CHIP 1k 0.5% 1/10W
R225	1-216-659-11	s	METAL, CHIP 2.2k 0.5% 1/10W
R226	1-216-651-11	s	METAL, CHIP 1k 0.5% 1/10W
R227	1-216-659-11	s	METAL, CHIP 2.2k 0.5% 1/10W
R228	1-216-049-91	s	METAL, CHIP 1k 5% 1/10W
R229	1-216-659-11	s	METAL, CHIP 2.2k 0.5% 1/10W

(IO-149 BOARD(For PAL); Suffix -12, 13)

Ref. No. or Q'ty	Part No.	SP	Description
R230	1-216-651-11	s	METAL, CHIP 1k 0.5% 1/10W
R231	1-216-121-91	s	METAL, CHIP 1M 5% 1/10W
R232	1-216-049-91	s	METAL, CHIP 1k 5% 1/10W
R233	1-216-049-91	s	METAL, CHIP 1k 5% 1/10W
R234	1-216-121-91	s	METAL, CHIP 1M 5% 1/10W
R235	1-216-121-91	s	METAL, CHIP 1M 5% 1/10W
R236	1-216-049-91	s	METAL, CHIP 1k 5% 1/10W
R237	1-216-049-91	s	METAL, CHIP 1k 5% 1/10W
R238	1-216-049-91	s	METAL, CHIP 1k 5% 1/10W
R239	1-216-049-91	s	METAL, CHIP 1k 5% 1/10W
R240	1-216-049-91	s	METAL, CHIP 1k 5% 1/10W
R241	1-216-089-91	s	METAL, CHIP 47k 5% 1/10W
R242	1-216-049-91	s	METAL, CHIP 1k 5% 1/10W
R243	1-216-089-91	s	METAL, CHIP 47k 5% 1/10W
R244	1-216-073-00	s	METAL, CHIP 10k 5% 1/10W
R245	1-216-649-11	s	METAL, CHIP 820 0.5% 1/10W
R246	1-216-057-00	s	METAL, CHIP 2.2k 5% 1/10W
R247	1-216-651-11	s	METAL, CHIP 1k 0.5% 1/10W
R248	1-216-057-00	s	METAL, CHIP 2.2k 5% 1/10W
R249	1-216-643-11	s	METAL, CHIP 470 0.5% 1/10W
R250	1-216-639-11	s	METAL, CHIP 330 0.5% 1/10W
R251	1-216-643-11	s	METAL, CHIP 470 0.5% 1/10W
R252	1-216-677-11	s	METAL, CHIP 12k 0.5% 1/10W
R253	1-216-683-11	s	METAL, CHIP 22k 0.5% 1/10W
R254	1-216-681-11	s	METAL, CHIP 18k 0.5% 1/10W
R255	1-216-683-11	s	METAL, CHIP 22k 0.5% 1/10W
R256	1-216-097-91	s	METAL, CHIP 100k 5% 1/10W
R257	1-216-089-91	s	METAL, CHIP 47k 5% 1/10W
R258	1-216-295-91	s	RES, CHIP 0
R259	1-216-675-11	s	METAL, CHIP 10k 0.5% 1/10W
R260	1-216-073-00	s	METAL, CHIP 10k 5% 1/10W
R261	1-216-049-91	s	METAL, CHIP 1k 5% 1/10W
R262	1-216-682-11	s	METAL, CHIP 20k 0.5% 1/10W
R263	1-216-065-00	s	METAL, CHIP 4.7k 5% 1/10W
R264	1-216-065-00	s	METAL, CHIP 4.7k 5% 1/10W
R265	1-216-049-91	s	METAL, CHIP 1k 5% 1/10W
R266	1-216-049-91	s	METAL, CHIP 1k 5% 1/10W
R267	1-216-049-91	s	METAL, CHIP 1k 5% 1/10W
R268	1-216-049-91	s	METAL, CHIP 1k 5% 1/10W
R269	1-216-057-00	s	METAL, CHIP 2.2k 5% 1/10W
R270	1-216-647-11	s	METAL, CHIP 680 0.5% 1/10W
R271	1-216-081-00	s	METAL, CHIP 22k 5% 1/10W
R272	1-216-666-11	s	METAL, CHIP 4.3k 0.5% 1/10W
R273	1-216-651-11	s	METAL, CHIP 1k 0.5% 1/10W
R274	1-216-661-11	s	METAL, CHIP 2.7k 0.5% 1/10W
R275	1-216-057-00	s	METAL, CHIP 2.2k 5% 1/10W
R276	1-216-049-91	s	METAL, CHIP 1k 5% 1/10W
R277	1-216-081-00	s	METAL, CHIP 22k 5% 1/10W
R278	1-216-025-91	s	METAL, CHIP 100 5% 1/10W
R279	1-216-017-91	s	METAL, CHIP 47 5% 1/10W
R280	1-216-657-11	s	METAL, CHIP 1.8k 0.5% 1/10W
R281	1-216-073-00	s	METAL, CHIP 10k 5% 1/10W
R282	1-216-105-91	s	METAL, CHIP 220k 5% 1/10W
R283	1-216-081-00	s	METAL, CHIP 22k 5% 1/10W *4)
R284	1-216-081-00	s	METAL, CHIP 22k 5% 1/10W *4)
R285	1-216-081-00	s	METAL, CHIP 22k 5% 1/10W *4)
R286	1-216-081-00	s	METAL, CHIP 22k 5% 1/10W *4)
R301	1-216-065-00	s	METAL, CHIP 4.7k 5% 1/10W
R302	1-216-025-91	s	METAL, CHIP 100 5% 1/10W

(IO-149 BOARD(For PAL); Suffix -12, 13)

Ref. No. or Q'ty	Part No.	SP	Description
R303	1-216-065-00	s	METAL, CHIP 4.7k 5% 1/10W
R304	1-216-049-91	s	METAL, CHIP 1k 5% 1/10W
R305	1-216-049-91	s	METAL, CHIP 1k 5% 1/10W
R306	1-216-033-00	s	METAL, CHIP 220 5% 1/10W
R307	1-216-057-00	s	METAL, CHIP 2.2k 5% 1/10W
R308	1-216-057-00	s	METAL, CHIP 2.2k 5% 1/10W
R309	1-216-049-91	s	METAL, CHIP 1k 5% 1/10W
R310	1-216-049-91	s	METAL, CHIP 1k 5% 1/10W
R311	1-216-659-11	s	METAL, CHIP 2.2k 0.5% 1/10W
R312	1-216-627-11	s	METAL, CHIP 100 0.5% 1/10W
R313	1-216-295-91	s	RES, CHIP 0
R314	1-216-661-11	s	METAL, CHIP 2.7k 0.5% 1/10W
R315	1-216-065-00	s	METAL, CHIP 4.7k 5% 1/10W
R316	1-216-025-91	s	METAL, CHIP 100 5% 1/10W
R317	1-216-647-11	s	METAL, CHIP 680 0.5% 1/10W
R318	1-216-017-91	s	METAL, CHIP 47 5% 1/10W
R319	1-216-657-11	s	METAL, CHIP 1.8k 0.5% 1/10W
R320	1-216-065-00	s	METAL, CHIP 4.7k 5% 1/10W
R321	1-216-025-91	s	METAL, CHIP 100 5% 1/10W
R322	1-216-643-11	s	METAL, CHIP 470 0.5% 1/10W
R323	1-216-653-11	s	METAL, CHIP 1.2k 0.5% 1/10W
R324	1-216-643-11	s	METAL, CHIP 470 0.5% 1/10W
R325	1-216-643-11	s	METAL, CHIP 470 0.5% 1/10W
R326	1-216-647-11	s	METAL, CHIP 680 0.5% 1/10W
R327	1-216-065-00	s	METAL, CHIP 4.7k 5% 1/10W
R328	1-216-639-11	s	METAL, CHIP 330 0.5% 1/10W
R329	1-216-049-91	s	METAL, CHIP 1k 5% 1/10W
R330	1-216-033-00	s	METAL, CHIP 220 5% 1/10W
R331	1-216-049-91	s	METAL, CHIP 1k 5% 1/10W
R332	1-216-049-91	s	METAL, CHIP 1k 5% 1/10W
R333	1-216-049-91	s	METAL, CHIP 1k 5% 1/10W
R336	1-216-061-00	s	METAL, CHIP 3.3k 5% 1/10W
R337	1-216-683-11	s	METAL, CHIP 22k 0.5% 1/10W
R338	1-216-667-11	s	METAL, CHIP 4.7k 0.5% 1/10W
R339	1-216-049-91	s	METAL, CHIP 1k 5% 1/10W
R340	1-216-643-11	s	METAL, CHIP 470 0.5% 1/10W
R341	1-216-643-11	s	METAL, CHIP 470 0.5% 1/10W
R342	1-216-651-11	s	METAL, CHIP 1k 0.5% 1/10W
R343	1-216-053-00	s	METAL, CHIP 1.5k 5% 1/10W
R344	1-216-025-91	s	METAL, CHIP 100 5% 1/10W
R345	1-216-643-11	s	METAL, CHIP 470 0.5% 1/10W
R346	1-216-077-00	s	METAL, CHIP 15k 5% 1/10W
R347	1-216-057-00	s	METAL, CHIP 2.2k 5% 1/10W
R348	1-216-655-11	s	METAL, CHIP 1.5k 0.5% 1/10W
R349	1-216-025-91	s	METAL, CHIP 100 5% 1/10W
R350	1-216-643-11	s	METAL, CHIP 470 0.5% 1/10W
R351	1-216-057-00	s	METAL, CHIP 2.2k 5% 1/10W
R352	1-216-634-11	s	METAL, CHIP 200 0.5% 1/10W
R354	1-216-057-00	s	METAL, CHIP 2.2k 5% 1/10W
R357	1-216-655-11	s	METAL, CHIP 1.5k 0.5% 1/10W
R359	1-216-057-00	s	METAL, CHIP 2.2k 5% 1/10W
R361	1-216-651-11	s	METAL, CHIP 1k 0.5% 1/10W
R362	1-216-025-91	s	METAL, CHIP 100 5% 1/10W
R363	1-216-025-91	s	METAL, CHIP 100 5% 1/10W
R364	1-216-049-91	s	METAL, CHIP 1k 5% 1/10W
R365	1-216-025-91	s	METAL, CHIP 100 5% 1/10W
R366	1-216-651-11	s	METAL, CHIP 1k 0.5% 1/10W
R367	1-216-653-11	s	METAL, CHIP 1.2k 0.5% 1/10W
R368	1-216-049-91	s	METAL, CHIP 1k 5% 1/10W

(IO-149 BOARD(For PAL); Suffix -12, 13)

Ref. No. or Q'ty	Part No.	SP	Description
R369	1-216-049-91	s	METAL, CHIP 1k 5% 1/10W
R370	1-216-651-11	s	METAL, CHIP 1k 0.5% 1/10W
R371	1-216-057-00	s	METAL, CHIP 2.2k 5% 1/10W
R372	1-216-049-91	s	METAL, CHIP 1k 5% 1/10W
R373	1-216-049-91	s	METAL, CHIP 1k 5% 1/10W
R374	1-216-653-11	s	METAL, CHIP 1.2k 0.5% 1/10W
R375	1-216-653-11	s	METAL, CHIP 1.2k 0.5% 1/10W
R376	1-216-049-91	s	METAL, CHIP 1k 5% 1/10W
R377	1-216-049-91	s	METAL, CHIP 1k 5% 1/10W
R378	1-216-065-00	s	METAL, CHIP 4.7k 5% 1/10W
R379	1-216-025-91	s	METAL, CHIP 100 5% 1/10W
R380	1-216-065-00	s	METAL, CHIP 4.7k 5% 1/10W
R381	1-216-025-91	s	METAL, CHIP 100 5% 1/10W
R382	1-216-053-00	s	METAL, CHIP 1.5k 5% 1/10W
R383	1-216-049-91	s	METAL, CHIP 1k 5% 1/10W
R384	1-216-049-91	s	METAL, CHIP 1k 5% 1/10W
R385	1-216-049-91	s	METAL, CHIP 1k 5% 1/10W
R386	1-216-049-91	s	METAL, CHIP 1k 5% 1/10W
R387	1-216-049-91	s	METAL, CHIP 1k 5% 1/10W
R388	1-216-049-91	s	METAL, CHIP 1k 5% 1/10W
R389	1-216-639-11	s	METAL, CHIP 330 0.5% 1/10W
R390	1-216-639-11	s	METAL, CHIP 330 0.5% 1/10W
R391	1-216-057-00	s	METAL, CHIP 2.2k 5% 1/10W
R392	1-216-041-00	s	METAL, CHIP 470 5% 1/10W
R393	1-216-057-00	s	METAL, CHIP 2.2k 5% 1/10W
R394	1-216-025-91	s	METAL, CHIP 100 5% 1/10W
R395	1-216-025-91	s	METAL, CHIP 100 5% 1/10W
R396	1-216-025-91	s	METAL, CHIP 100 5% 1/10W
R397	1-216-025-91	s	METAL, CHIP 100 5% 1/10W
R398	1-216-055-00	s	METAL, CHIP 1.8k 5% 1/10W
R399	1-216-065-00	s	METAL, CHIP 4.7k 5% 1/10W
R400	1-216-065-00	s	METAL, CHIP 4.7k 5% 1/10W
R401	1-216-065-00	s	METAL, CHIP 4.7k 5% 1/10W
R402	1-216-065-00	s	METAL, CHIP 4.7k 5% 1/10W
R403	1-216-669-11	s	METAL, CHIP 5.6k 0.5% 1/10W
R404	1-216-659-11	s	METAL, CHIP 2.2k 0.5% 1/10W
R405	1-216-113-00	s	METAL, CHIP 470k 5% 1/10W
R406	1-216-049-91	s	METAL, CHIP 1k 5% 1/10W
R407	1-216-049-91	s	METAL, CHIP 1k 5% 1/10W
R408	1-216-049-91	s	METAL, CHIP 1k 5% 1/10W
R409	1-216-057-00	s	METAL, CHIP 2.2k 5% 1/10W
R410	1-216-669-11	s	METAL, CHIP 5.6k 0.5% 1/10W
R411	1-216-659-11	s	METAL, CHIP 2.2k 0.5% 1/10W
R412	1-216-055-00	s	METAL, CHIP 1.8k 5% 1/10W
R413	1-216-057-00	s	METAL, CHIP 2.2k 5% 1/10W
R414	1-216-017-91	s	METAL, CHIP 47 5% 1/10W
R415	1-216-017-91	s	METAL, CHIP 47 5% 1/10W
R416	1-216-073-00	s	METAL, CHIP 10k 5% 1/10W
R417	1-216-643-11	s	METAL, CHIP 470 0.5% 1/10W
R418	1-216-643-11	s	METAL, CHIP 470 0.5% 1/10W
R419	1-216-653-11	s	METAL, CHIP 1.2k 0.5% 1/10W
R420	1-216-643-11	s	METAL, CHIP 470 0.5% 1/10W
R421	1-216-041-00	s	METAL, CHIP 470 5% 1/10W
R422	1-216-653-11	s	METAL, CHIP 1.2k 0.5% 1/10W
R423	1-216-643-11	s	METAL, CHIP 470 0.5% 1/10W
R424	1-216-643-11	s	METAL, CHIP 470 0.5% 1/10W
R425	1-216-663-11	s	METAL, CHIP 3.3k 0.5% 1/10W
R426	1-216-663-11	s	METAL, CHIP 3.3k 0.5% 1/10W
R427	1-216-053-00	s	METAL, CHIP 1.5k 5% 1/10W

(IO-149 BOARD(For PAL); Suffix -12, 13)

Ref. No. or Q'ty	Part No.	SP	Description
R428	1-216-651-11	s	METAL, CHIP 1k 0.5% 1/10W
R429	1-216-639-11	s	METAL, CHIP 330 0.5% 1/10W
R430	1-216-651-11	s	METAL, CHIP 1k 0.5% 1/10W
R431	1-216-639-11	s	METAL, CHIP 330 0.5% 1/10W
R432	1-216-065-00	s	METAL, CHIP 4.7k 5% 1/10W
R433	1-216-065-00	s	METAL, CHIP 4.7k 5% 1/10W
R434	1-216-656-11	s	METAL, CHIP 1.6k 0.5% 1/10W
R435	1-216-657-11	s	METAL, CHIP 1.8k 0.5% 1/10W
R436	1-216-049-91	s	METAL, CHIP 1k 5% 1/10W
R437	1-216-081-00	s	METAL, CHIP 22k 5% 1/10W
R438	1-216-653-11	s	METAL, CHIP 1.2k 0.5% 1/10W
R439	1-216-667-11	s	METAL, CHIP 4.7k 0.5% 1/10W
R440	1-216-651-11	s	METAL, CHIP 1k 0.5% 1/10W
R441	1-216-624-11	s	METAL, CHIP 75 0.5% 1/10W
R442	1-216-624-11	s	METAL, CHIP 75 0.5% 1/10W
R443	1-216-624-11	s	METAL, CHIP 75 0.5% 1/10W
R444	1-216-646-11	s	METAL, CHIP 620 0.5% 1/10W
R445	1-216-045-00	s	METAL, CHIP 680 5% 1/10W
R446	1-216-041-00	s	METAL, CHIP 470 5% 1/10W
R447	1-216-656-11	s	METAL, CHIP 1.6k 0.5% 1/10W
R448	1-216-041-00	s	METAL, CHIP 470 5% 1/10W
R449	1-216-657-11	s	METAL, CHIP 1.8k 0.5% 1/10W
R450	1-216-624-11	s	METAL, CHIP 75 0.5% 1/10W
R451	1-216-097-91	s	METAL, CHIP 100k 5% 1/10W
R452	1-216-073-00	s	METAL, CHIP 10k 5% 1/10W
R453	1-216-081-00	s	METAL, CHIP 22k 5% 1/10W
R454	1-216-095-00	s	METAL, CHIP 82k 5% 1/10W
R455	1-216-073-00	s	METAL, CHIP 10k 5% 1/10W
R456	1-216-624-11	s	METAL, CHIP 75 0.5% 1/10W
R457	1-216-624-11	s	METAL, CHIP 75 0.5% 1/10W
R458	1-216-675-11	s	METAL, CHIP 10k 0.5% 1/10W
R459	1-216-624-11	s	METAL, CHIP 75 0.5% 1/10W
R501	1-216-089-91	s	METAL, CHIP 47k 5% 1/10W
R502	1-216-683-11	s	METAL, CHIP 22k 0.5% 1/10W
R503	1-216-655-11	s	METAL, CHIP 1.5k 0.5% 1/10W
R504	1-216-675-11	s	METAL, CHIP 10k 0.5% 1/10W
R505	1-216-675-11	s	METAL, CHIP 10k 0.5% 1/10W
R507	1-216-655-11	s	METAL, CHIP 1.5k 0.5% 1/10W
R508	1-216-073-00	s	METAL, CHIP 10k 5% 1/10W
R509	1-216-669-11	s	METAL, CHIP 5.6k 0.5% 1/10W
R510	1-216-675-11	s	METAL, CHIP 10k 0.5% 1/10W
R511	1-216-667-11	s	METAL, CHIP 4.7k 0.5% 1/10W
R513	1-216-677-11	s	METAL, CHIP 12k 0.5% 1/10W
R515	1-216-057-00	s	METAL, CHIP 2.2k 5% 1/10W
R516	1-216-691-11	s	METAL, CHIP 47k 0.5% 1/10W
R517	1-216-677-11	s	METAL, CHIP 12k 0.5% 1/10W
R518	1-216-679-11	s	METAL, CHIP 15k 0.5% 1/10W
R519	1-208-802-11	s	METAL, CHIP 6.8k 0.5% 1/10W
R520	1-216-679-11	s	METAL, CHIP 15k 0.5% 1/10W
R521	1-216-089-91	s	METAL, CHIP 47k 5% 1/10W
R522	1-216-097-91	s	METAL, CHIP 100k 5% 1/10W
R523	1-216-089-91	s	METAL, CHIP 47k 5% 1/10W
R524	1-216-675-11	s	METAL, CHIP 10k 0.5% 1/10W
R525	1-216-651-11	s	METAL, CHIP 1k 0.5% 1/10W
R526	1-216-675-11	s	METAL, CHIP 10k 0.5% 1/10W
R527	1-216-665-11	s	METAL, CHIP 3.9k 0.5% 1/10W
R528	1-216-677-11	s	METAL, CHIP 12k 0.5% 1/10W
R529	1-216-049-91	s	METAL, CHIP 1k 5% 1/10W
R530	1-216-065-00	s	METAL, CHIP 4.7k 5% 1/10W

(IO-149 BOARD(For PAL); Suffix -12, 13)

Ref. No. or Q'ty	Part No.	SP	Description
R531	1-216-049-91	s	METAL, CHIP 1k 5% 1/10W
R532	1-216-049-91	s	METAL, CHIP 1k 5% 1/10W
R533	1-216-677-11	s	METAL, CHIP 12k 0.5% 1/10W
R534	1-216-051-00	s	METAL, CHIP 1.2k 5% 1/10W
R535	1-216-675-11	s	METAL, CHIP 10k 0.5% 1/10W
R536	1-216-059-00	s	METAL, CHIP 2.7k 5% 1/10W
R537	1-216-643-11	s	METAL, CHIP 470 0.5% 1/10W
R538	1-216-679-11	s	METAL, CHIP 15k 0.5% 1/10W
R539	1-216-049-91	s	METAL, CHIP 1k 5% 1/10W
R540	1-216-057-00	s	METAL, CHIP 2.2k 5% 1/10W
R541	1-216-651-11	s	METAL, CHIP 1k 0.5% 1/10W
R542	1-216-057-00	s	METAL, CHIP 2.2k 5% 1/10W
R543	1-216-073-00	s	METAL, CHIP 10k 5% 1/10W
R544	1-216-651-11	s	METAL, CHIP 1k 0.5% 1/10W
R545	1-216-683-11	s	METAL, CHIP 22k 0.5% 1/10W
R546	1-216-057-00	s	METAL, CHIP 2.2k 5% 1/10W
R547	1-216-017-91	s	METAL, CHIP 47 5% 1/10W
R548	1-216-683-11	s	METAL, CHIP 22k 0.5% 1/10W
R549	1-216-666-11	s	METAL, CHIP 4.3k 0.5% 1/10W
R550	1-216-655-11	s	METAL, CHIP 1.5k 0.5% 1/10W
R551	1-216-097-91	s	METAL, CHIP 100k 5% 1/10W
R552	1-216-059-00	s	METAL, CHIP 2.7k 5% 1/10W
R553	1-216-671-11	s	METAL, CHIP 6.8k 0.5% 1/10W
R554	1-216-655-11	s	METAL, CHIP 1.5k 0.5% 1/10W
R555	1-216-059-00	s	METAL, CHIP 2.7k 5% 1/10W
R556	1-216-073-00	s	METAL, CHIP 10k 5% 1/10W
R557	1-216-683-11	s	METAL, CHIP 22k 0.5% 1/10W
R558	1-216-017-91	s	METAL, CHIP 47 5% 1/10W
R559	1-216-687-11	s	METAL, CHIP 33k 0.5% 1/10W
R560	1-216-679-11	s	METAL, CHIP 15k 0.5% 1/10W
R561	1-216-683-11	s	METAL, CHIP 22k 0.5% 1/10W
R562	1-216-069-00	s	METAL, CHIP 6.8k 5% 1/10W
R563	1-216-687-11	s	METAL, CHIP 33k 0.5% 1/10W
R564	1-216-687-11	s	METAL, CHIP 33k 0.5% 1/10W
R565	1-216-047-91	s	METAL, CHIP 820 5% 1/10W
R566	1-216-049-91	s	METAL, CHIP 1k 5% 1/10W
R567	1-216-691-11	s	METAL, CHIP 47k 0.5% 1/10W
R568	1-216-025-91	s	METAL, CHIP 100 5% 1/10W
R569	1-216-041-00	s	METAL, CHIP 470 5% 1/10W
R570	1-216-669-11	s	METAL, CHIP 5.6k 0.5% 1/10W
R571	1-216-081-00	s	METAL, CHIP 22k 5% 1/10W
R572	1-216-049-91	s	METAL, CHIP 1k 5% 1/10W
R573	1-216-059-00	s	METAL, CHIP 2.7k 5% 1/10W
R574	1-216-681-11	s	METAL, CHIP 18k 0.5% 1/10W
R575	1-216-041-00	s	METAL, CHIP 470 5% 1/10W
R576	1-216-624-11	s	METAL, CHIP 75 0.5% 1/10W
R577	1-216-687-11	s	METAL, CHIP 33k 0.5% 1/10W
R579	1-218-772-11	s	METAL, CHIP 680k 0.5% 1/10W
R580	1-216-017-91	s	METAL, CHIP 47 5% 1/10W
R581	1-216-025-91	s	METAL, CHIP 100 5% 1/10W
R582	1-216-061-00	s	METAL, CHIP 3.3k 5% 1/10W
R583	1-216-097-91	s	METAL, CHIP 100k 5% 1/10W
R584	1-216-017-91	s	METAL, CHIP 47 5% 1/10W
R585	1-216-049-91	s	METAL, CHIP 1k 5% 1/10W
R586	1-216-049-91	s	METAL, CHIP 1k 5% 1/10W
R587	1-216-049-91	s	METAL, CHIP 1k 5% 1/10W
R588	1-216-093-00	s	METAL, CHIP 68k 5% 1/10W
R589	1-216-049-91	s	METAL, CHIP 1k 5% 1/10W
R590	1-208-797-11	s	METAL, CHIP 4.3k 0.5% 1/10W

(IO-149 BOARD(For PAL); Suffix -12, 13)

Ref. No. or Q'ty	Part No.	SP	Description	
R591	1-216-045-00	s	METAL, CHIP 680 5% 1/10W	
R592	1-216-081-00	s	METAL, CHIP 22k 5% 1/10W	
R593	1-208-804-11	s	METAL, CHIP 8.2k 0.5% 1/10W	
R594	1-216-025-91	s	METAL, CHIP 100 5% 1/10W	
R595	1-216-025-91	s	METAL, CHIP 100 5% 1/10W	
R596	1-208-774-11	s	METAL, CHIP 470 0.5% 1/10W	
R597	1-208-774-11	s	METAL, CHIP 470 0.5% 1/10W	
R601	1-216-089-91	s	METAL, CHIP 47k 5% 1/10W	
R603	1-216-295-91	s	RES, CHIP 0	
R605	1-216-295-91	s	RES, CHIP 0	
R606	1-216-073-00	s	METAL, CHIP 10k 5% 1/10W	
R607	1-216-065-00	s	METAL, CHIP 4.7k 5% 1/10W	
R608	1-216-017-91	s	METAL, CHIP 47 5% 1/10W	
R609	1-216-295-91	s	RES, CHIP 0	
R610	1-216-049-91	s	METAL, CHIP 1k 5% 1/10W	
R612	1-216-085-00	s	METAL, CHIP 33k 5% 1/10W	
R614	1-216-073-00	s	METAL, CHIP 10k 5% 1/10W	
R615	1-216-065-00	s	METAL, CHIP 4.7k 5% 1/10W	
R616	1-216-017-91	s	METAL, CHIP 47 5% 1/10W	
R617	1-216-085-00	s	METAL, CHIP 33k 5% 1/10W	
R618	1-216-085-00	s	METAL, CHIP 33k 5% 1/10W	
R619	1-216-658-11	s	METAL, CHIP 2k 0.5% 1/10W	
R620	1-216-051-00	s	METAL, CHIP 1.2k 5% 1/10W	
R621	1-216-658-11	s	METAL, CHIP 2k 0.5% 1/10W	
R622	1-216-051-00	s	METAL, CHIP 1.2k 5% 1/10W	
R623	1-216-643-11	s	METAL, CHIP 470 0.5% 1/10W	
R624	1-216-037-00	s	METAL, CHIP 330 5% 1/10W	
R625	1-216-648-11	s	METAL, CHIP 750 0.5% 1/10W	
R626	1-216-037-00	s	METAL, CHIP 330 5% 1/10W	
R627	1-216-071-00	s	METAL, CHIP 8.2k 5% 1/10W	
R628	1-216-686-11	s	METAL, CHIP 30k 0.5% 1/10W	
R629	1-216-069-00	s	METAL, CHIP 6.8k 5% 1/10W	
R630	1-216-686-11	s	METAL, CHIP 30k 0.5% 1/10W	
R631	1-216-041-00	s	METAL, CHIP 470 5% 1/10W	
R632	1-216-041-00	s	METAL, CHIP 470 5% 1/10W	
R633	1-216-017-91	s	METAL, CHIP 47 5% 1/10W	
R634	1-216-097-91	s	METAL, CHIP 100k 5% 1/10W	
R635	1-216-667-11	s	METAL, CHIP 4.7k 0.5% 1/10W	
R637	1-218-772-11	s	METAL, CHIP 680k 0.5% 1/10W	
R638	1-216-659-11	s	METAL, CHIP 2.2k 0.5% 1/10W	
R639	1-216-017-91	s	METAL, CHIP 47 5% 1/10W	
R640	1-216-663-11	s	METAL, CHIP 3.3k 0.5% 1/10W	
R641	1-216-650-91	s	METAL, CHIP 910 0.5% 1/10W	
R642	1-216-665-11	s	METAL, CHIP 3.9k 0.5% 1/10W	
R643	1-216-677-11	s	METAL, CHIP 12k 0.5% 1/10W	
R644	1-216-635-11	s	METAL, CHIP 220 0.5% 1/10W	
R645	1-216-635-11	s	METAL, CHIP 220 0.5% 1/10W	
R646	1-216-049-91	s	METAL, CHIP 1k 5% 1/10W	
R647	1-216-049-91	s	METAL, CHIP 1k 5% 1/10W	
R648	1-216-037-00	s	METAL, CHIP 330 5% 1/10W	
R649	1-216-037-00	s	METAL, CHIP 330 5% 1/10W	
R650	1-216-049-91	s	METAL, CHIP 1k 5% 1/10W	
R651	1-216-049-91	s	METAL, CHIP 1k 5% 1/10W	
R652	1-216-025-91	s	METAL, CHIP 100 5% 1/10W	
R653	1-216-025-91	s	METAL, CHIP 100 5% 1/10W	
R654	1-216-025-91	s	METAL, CHIP 100 5% 1/10W	
R655	1-216-049-91	s	METAL, CHIP 1k 5% 1/10W	
R656	1-216-049-91	s	METAL, CHIP 1k 5% 1/10W	
R657	1-216-025-91	s	METAL, CHIP 100 5% 1/10W	

(IO-149 BOARD(For PAL); Suffix -12, 13)

Ref. No. or Q'ty	Part No.	SP	Description	
R658	1-216-025-91	s	METAL, CHIP 100 5% 1/10W	
R659	1-216-049-91	s	METAL, CHIP 1k 5% 1/10W	
R660	1-216-295-91	s	RES, CHIP 0	*3)
R661	1-216-295-91	s	RES, CHIP 0	*3)
R662	1-216-295-91	s	RES, CHIP 0	*3)
RB101	1-239-999-11	s	RESISTOR BLOCK, CHIP 1k x 4	
RB102	1-239-998-11	s	RESISTOR BLOCK, CHIP 100 x 4	
RB103	1-233-237-11	s	RESISTOR BLOCK, CHIP 100k x 4	
RB701	1-233-234-11	s	RESISTOR BLOCK, CHIP 2.2k x 4	
RV101	1-237-034-11	s	RES, ADJ METAL 2k	
RV102	1-237-034-11	s	RES, ADJ METAL 2k	
RV103	1-237-034-11	s	RES, ADJ METAL 2k	
RV105	1-237-035-11	s	RES, ADJ METAL 5k	
RV106	1-237-035-11	s	RES, ADJ METAL 5k	
RV107	1-237-036-11	s	RES, ADJ METAL 10k	
RV108	1-237-038-11	s	RES, ADJ METAL 50k	*3)
	1-237-036-11	s	RES, ADJ, METAL 10k	*4)
RV109	1-237-038-11	s	RES, ADJ METAL 50k	*3)
	1-237-036-11	s	RES, ADJ, METAL 10k	*4)
RV110	1-237-035-11	s	RES, ADJ METAL 5k	
RV111	1-237-035-11	s	RES, ADJ METAL 5k	
RV112	1-237-034-11	s	RES, ADJ METAL 2k	
RV301	1-237-033-11	s	RES, ADJ METAL 1k	
RV302	1-237-034-11	s	RES, ADJ METAL 2k	
RV303	1-237-032-11	s	RES, ADJ METAL 500	
RV304	1-237-033-11	s	RES, ADJ METAL 1k	
RV305	1-237-035-11	s	RES, ADJ METAL 5k	
RV306	1-237-033-11	s	RES, ADJ METAL 1k	
RV307	1-237-033-11	s	RES, ADJ METAL 1k	
RV308	1-237-032-11	s	RES, ADJ METAL 500	
RV309	1-237-034-11	s	RES, ADJ METAL 2k	
RV310	1-237-034-11	s	RES, ADJ METAL 2k	
RV311	1-237-032-11	s	RES, ADJ METAL 500	
RV312	1-237-035-11	s	RES, ADJ METAL 5k	
RV313	1-237-035-11	s	RES, ADJ METAL 5k	
RV314	1-237-032-11	s	RES, ADJ METAL 500	
RV315	1-237-032-11	s	RES, ADJ METAL 500	
RV316	1-237-033-11	s	RES, ADJ METAL 1k	
RV317	1-237-033-11	s	RES, ADJ METAL 1k	
RV318	1-237-030-11	s	RES, ADJ METAL 100	
RV319	1-237-030-11	s	RES, ADJ METAL 100	
RV501	1-237-035-11	s	RES, ADJ METAL 5k	
RV502	1-237-036-11	s	RES, ADJ METAL 10k	
RV503	1-237-037-11	s	RES, ADJ METAL 20k	
RV504	1-237-036-11	s	RES, ADJ METAL 10k	
RV505	1-237-034-11	s	RES, ADJ METAL 2k	
RV506	1-237-033-11	s	RES, ADJ METAL 1k	
RV601	1-237-035-11	s	RES, ADJ METAL 5k	
TH101	1-809-352-11	s	THERMISTOR, CHIP 1.5k	
TP101	1-535-877-22	o	CHECKER, CHIP	
TP102	1-535-877-22	o	CHECKER, CHIP	
TP103	1-535-877-22	o	CHECKER, CHIP	
TP301	1-535-877-22	o	CHECKER, CHIP	
TP302	1-535-877-22	o	CHECKER, CHIP	
TP303	1-535-877-22	o	CHECKER, CHIP	

(IO-149 BOARD(For PAL); Suffix -12, 13)

Ref. No. or Q'ty	Part No.	SP	Description
TP304	1-535-877-22	o	CHECKER, CHIP
TP305	1-535-877-22	o	CHECKER, CHIP
TP306	1-535-877-22	o	CHECKER, CHIP
TP307	1-535-877-22	o	CHECKER, CHIP
TP501	1-535-877-22	o	CHECKER, CHIP
TP502	1-535-877-22	o	CHECKER, CHIP
TP601	1-535-877-22	o	CHECKER, CHIP
TP602	1-535-877-22	o	CHECKER, CHIP
TP603	1-535-877-22	o	CHECKER, CHIP
TP604	1-535-877-22	o	CHECKER, CHIP
X101	1-767-260-11	s	CRYSTAL 13.50MHz
X102	1-767-260-11	s	CRYSTAL 13.50MHz
X103	1-767-260-11	s	CRYSTAL 13.50MHz
X601	1-767-262-11	s	CRYSTAL 27.00MHz
X602	1-760-457-11	s	CRYSTAL 17.7345MHz

IO-149 BOARD(For PAL); Suffix -11

Ref. No. or Q'ty / Part No. / SP Description

This list corresponds to the board suffix number -11.

The parts marked * are different, depending on the product serial numbers, as shown below:
*1) Serial number; 10001 through 10050 (For DSR-60P CE)
*2) Serial number; 10051 and higher (For DSR-60P CE)
*3) Serial number; 10001 through 10250 (For DSR-60P CE)
*4) Serial number; 10251 and higher (For DSR-60P CE)

Ref. No. or Q'ty	Part No.	SP	Description
1pc	A-8312-962-A	o	MOUNTED CIRCUIT BOARD, IO-149C
1pc	7-621-759-45	s	+PSW, 2.6x6
1pc	3-179-085-01	s	LEVER (L), PRINTED CIRCUIT BOARD
1pc	3-179-084-01	s	LEVER (R), PRINTED CIRCUIT BOARD
C1	1-126-392-11	s	ELECT, CHIP 100uF 20% 6.3V
C2	1-163-038-91	s	CERAMIC, CHIP 0.1uF 25V
C3	1-126-392-11	s	ELECT, CHIP 100uF 20% 6.3V
C4	1-163-038-91	s	CERAMIC, CHIP 0.1uF 25V
C5	1-126-392-11	s	ELECT, CHIP 100uF 20% 6.3V
C6	1-163-038-91	s	CERAMIC, CHIP 0.1uF 25V
C11	1-126-396-11	s	ELECT, CHIP 47uF 20% 16V
C12	1-163-038-91	s	CERAMIC, CHIP 0.1uF 25V
C13	1-126-396-11	s	ELECT, CHIP 47uF 20% 16V
C14	1-163-038-91	s	CERAMIC, CHIP 0.1uF 25V
C15	1-126-396-11	s	ELECT, CHIP 47uF 20% 16V
C16	1-163-038-91	s	CERAMIC, CHIP 0.1uF 25V
C21	1-126-396-11	s	ELECT, CHIP 47uF 20% 16V
C22	1-163-038-91	s	CERAMIC, CHIP 0.1uF 25V
C23	1-126-396-11	s	ELECT, CHIP 47uF 20% 16V
C24	1-163-038-91	s	CERAMIC, CHIP 0.1uF 25V
C25	1-126-396-11	s	ELECT, CHIP 47uF 20% 16V
C26	1-163-038-91	s	CERAMIC, CHIP 0.1uF 25V
C31	1-126-396-11	s	ELECT, CHIP 47uF 20% 16V
C32	1-163-038-91	s	CERAMIC, CHIP 0.1uF 25V
C33	1-126-396-11	s	ELECT, CHIP 47uF 20% 16V
C34	1-163-038-91	s	CERAMIC, CHIP 0.1uF 25V
C35	1-126-396-11	s	ELECT, CHIP 47uF 20% 16V
C36	1-163-038-91	s	CERAMIC, CHIP 0.1uF 25V
C37	1-126-396-11	s	ELECT, CHIP 47uF 20% 16V
C38	1-163-038-91	s	CERAMIC, CHIP 0.1uF 25V
C39	1-126-396-11	s	ELECT, CHIP 47uF 20% 16V
C40	1-163-038-91	s	CERAMIC, CHIP 0.1uF 25V
C101	1-164-004-11	s	CERAMIC, CHIP 0.1uF 10% 25V
C102	1-163-037-11	s	CERAMIC, CHIP 0.022uF 10% 25V
C103	1-126-396-11	s	ELECT, CHIP 47uF 20% 16V
C104	1-163-037-11	s	CERAMIC, CHIP 0.022uF 10% 25V
C105	1-163-037-11	s	CERAMIC, CHIP 0.022uF 10% 25V
C106	1-163-037-11	s	CERAMIC, CHIP 0.022uF 10% 25V
C107	1-163-037-11	s	CERAMIC, CHIP 0.022uF 10% 25V
C108	1-163-235-11	s	CERAMIC, CHIP 22pF 5% 50V
C109	1-163-037-11	s	CERAMIC, CHIP 0.022uF 10% 25V
C110	1-164-004-11	s	CERAMIC, CHIP 0.1uF 10% 25V
C111	1-164-004-11	s	CERAMIC, CHIP 0.1uF 10% 25V
C112	1-163-275-11	s	CERAMIC, CHIP 0.001uF 5% 50V
C113	1-163-275-11	s	CERAMIC, CHIP 0.001uF 5% 50V
C114	1-164-004-11	s	CERAMIC, CHIP 0.1uF 10% 25V
C115	1-164-004-11	s	CERAMIC, CHIP 0.1uF 10% 25V
C116	1-163-275-11	s	CERAMIC, CHIP 0.001uF 5% 50V
C117	1-163-275-11	s	CERAMIC, CHIP 0.001uF 5% 50V
C118	1-163-237-11	s	CERAMIC, CHIP 27pF 5% 50V

(IO-149 BOARD(For PAL); Suffix -11)

Ref. No. or Q'ty	Part No.	SP	Description
C119	1-163-237-11	s	CERAMIC, CHIP 27pF 5% 50V
C120	1-163-037-11	s	CERAMIC, CHIP 0.022uF 10% 25V
C121	1-163-037-11	s	CERAMIC, CHIP 0.022uF 10% 25V
C122	1-163-037-11	s	CERAMIC, CHIP 0.022uF 10% 25V
C123	1-164-004-11	s	CERAMIC, CHIP 0.1uF 10% 25V
C124	1-163-037-11	s	CERAMIC, CHIP 0.022uF 10% 25V
C125	1-126-392-11	s	ELECT, CHIP 100uF 20% 6.3V
C126	1-163-275-11	s	CERAMIC, CHIP 0.001uF 5% 50V
C127	1-164-004-11	s	CERAMIC, CHIP 0.1uF 10% 25V
C128	1-163-037-11	s	CERAMIC, CHIP 0.022uF 10% 25V
C129	1-163-037-11	s	CERAMIC, CHIP 0.022uF 10% 25V
C130	1-163-275-11	s	CERAMIC, CHIP 0.001uF 5% 50V
C131	1-163-037-11	s	CERAMIC, CHIP 0.022uF 10% 25V
C132	1-163-037-11	s	CERAMIC, CHIP 0.022uF 10% 25V
C133	1-163-237-11	s	CERAMIC, CHIP 27pF 5% 50V
C134	1-126-394-11	s	ELECT, CHIP 10uF 20% 16V
C135	1-126-394-11	s	ELECT, CHIP 10uF 20% 16V
C136	1-163-037-11	s	CERAMIC, CHIP 0.022uF 10% 25V
C137	1-163-037-11	s	CERAMIC, CHIP 0.022uF 10% 25V
C138	1-163-037-11	s	CERAMIC, CHIP 0.022uF 10% 25V
C139	1-163-037-11	s	CERAMIC, CHIP 0.022uF 10% 25V
C140	1-163-037-11	s	CERAMIC, CHIP 0.022uF 10% 25V
C141	1-163-037-11	s	CERAMIC, CHIP 0.022uF 10% 25V
C142	1-126-392-11	s	ELECT, CHIP 100uF 20% 6.3V
C143	1-126-392-11	s	ELECT, CHIP 100uF 20% 6.3V
C144	1-163-037-11	s	CERAMIC, CHIP 0.022uF 10% 25V
C145	1-163-037-11	s	CERAMIC, CHIP 0.022uF 10% 25V
C146	1-163-037-11	s	CERAMIC, CHIP 0.022uF 10% 25V
C147	1-163-037-11	s	CERAMIC, CHIP 0.022uF 10% 25V
C148	1-163-037-11	s	CERAMIC, CHIP 0.022uF 10% 25V
C149	1-163-037-11	s	CERAMIC, CHIP 0.022uF 10% 25V
C150	1-163-037-11	s	CERAMIC, CHIP 0.022uF 10% 25V
C151	1-163-037-11	s	CERAMIC, CHIP 0.022uF 10% 25V
C152	1-163-037-11	s	CERAMIC, CHIP 0.022uF 10% 25V
C153	1-126-391-11	s	ELECT, CHIP 47uF 20% 6.3V
C154	1-163-231-11	s	CERAMIC, CHIP 15pF 5% 50V
C155	1-163-037-11	s	CERAMIC, CHIP 0.022uF 10% 25V
C156	1-163-038-91	s	CERAMIC, CHIP 0.1uF 25V
C157	1-163-037-11	s	CERAMIC, CHIP 0.022uF 10% 25V
C158	1-163-037-11	s	CERAMIC, CHIP 0.022uF 10% 25V
C159	1-163-038-91	s	CERAMIC, CHIP 0.1uF 25V
C160	1-163-037-11	s	CERAMIC, CHIP 0.022uF 10% 25V
C161	1-163-037-11	s	CERAMIC, CHIP 0.022uF 10% 25V
C162	1-163-038-91	s	CERAMIC, CHIP 0.1uF 25V
C163	1-163-038-91	s	CERAMIC, CHIP 0.1uF 25V
C164	1-163-038-91	s	CERAMIC, CHIP 0.1uF 25V
C165	1-126-391-11	s	ELECT, CHIP 47uF 20% 6.3V
C166	1-163-037-11	s	CERAMIC, CHIP 0.022uF 10% 25V
C167	1-126-391-11	s	ELECT, CHIP 47uF 20% 6.3V
C168	1-163-037-11	s	CERAMIC, CHIP 0.022uF 10% 25V
C169	1-163-037-11	s	CERAMIC, CHIP 0.022uF 10% 25V
C170	1-163-037-11	s	CERAMIC, CHIP 0.022uF 10% 25V
C171	1-126-391-11	s	ELECT, CHIP 47uF 20% 6.3V
C172	1-126-396-11	s	ELECT, CHIP 47uF 20% 16V
C173	1-126-396-11	s	ELECT, CHIP 47uF 20% 16V
C174	1-126-391-11	s	ELECT, CHIP 47uF 20% 6.3V
C175	1-126-391-11	s	ELECT, CHIP 47uF 20% 6.3V
C176	1-126-391-11	s	ELECT, CHIP 47uF 20% 6.3V
C177	1-126-391-11	s	ELECT, CHIP 47uF 20% 6.3V

(IO-149 BOARD(For PAL); Suffix -11)

Ref. No. or Q'ty	Part No.	SP	Description
C178	1-126-391-11	s	ELECT, CHIP 47uF 20% 6.3V
C179	1-163-037-11	s	CERAMIC, CHIP 0.022uF 10% 25V
C180	1-163-037-11	s	CERAMIC, CHIP 0.022uF 10% 25V
C181	1-163-037-11	s	CERAMIC, CHIP 0.022uF 10% 25V
C182	1-163-037-11	s	CERAMIC, CHIP 0.022uF 10% 25V
C183	1-163-037-11	s	CERAMIC, CHIP 0.022uF 10% 25V
C184	1-163-037-11	s	CERAMIC, CHIP 0.022uF 10% 25V
C185	1-163-037-11	s	CERAMIC, CHIP 0.022uF 10% 25V
C186	1-163-037-11	s	CERAMIC, CHIP 0.022uF 10% 25V
C187	1-163-037-11	s	CERAMIC, CHIP 0.022uF 10% 25V
C188	1-163-235-11	s	CERAMIC, CHIP 22pF 5% 50V
C189	1-163-235-11	s	CERAMIC, CHIP 22pF 5% 50V
C190	1-163-099-00	s	CERAMIC, CHIP 18pF 5% 50V
C191	1-163-037-11	s	CERAMIC, CHIP 0.022uF 10% 25V
C192	1-163-037-11	s	CERAMIC, CHIP 0.022uF 10% 25V
C193	1-163-037-11	s	CERAMIC, CHIP 0.022uF 10% 25V
C194	1-126-401-11	s	ELECT, CHIP 1uF 20% 50V
C195	1-126-401-11	s	ELECT, CHIP 1uF 20% 50V
C196	1-126-394-11	s	ELECT, CHIP 10uF 20% 16V
C197	1-126-401-11	s	ELECT, CHIP 1uF 20% 50V
C198	1-126-394-11	s	ELECT, CHIP 10uF 20% 16V
C199	1-163-038-91	s	CERAMIC, CHIP 0.1uF 25V
C200	1-126-401-11	s	ELECT, CHIP 1uF 20% 50V
C201	1-163-038-91	s	CERAMIC, CHIP 0.1uF 25V
C202	1-163-809-11	s	CERAMIC, CHIP 0.047uF 10% 25V
C203	1-163-809-11	s	CERAMIC, CHIP 0.047uF 10% 25V
C204	1-163-809-11	s	CERAMIC, CHIP 0.047uF 10% 25V
C205	1-163-227-11	s	CERAMIC, CHIP 10pF 5% 50V
C206	1-163-037-11	s	CERAMIC, CHIP 0.022uF 10% 25V
C207	1-163-037-11	s	CERAMIC, CHIP 0.022uF 10% 25V
C208	1-163-037-11	s	CERAMIC, CHIP 0.022uF 10% 25V
C209	1-163-037-11	s	CERAMIC, CHIP 0.022uF 10% 25V
C210	1-163-037-11	s	CERAMIC, CHIP 0.022uF 10% 25V
C211	1-126-396-11	s	ELECT, CHIP 47uF 20% 16V
C212	1-163-037-11	s	CERAMIC, CHIP 0.022uF 10% 25V
C213	1-163-227-11	s	CERAMIC, CHIP 10pF 5% 50V
C214	1-163-037-11	s	CERAMIC, CHIP 0.022uF 10% 25V
C215	1-126-396-11	s	ELECT, CHIP 47uF 20% 16V
C216	1-163-037-11	s	CERAMIC, CHIP 0.022uF 10% 25V
C217	1-126-390-11	s	ELECT, CHIP 22uF 20% 6.3V
C218	1-163-037-11	s	CERAMIC, CHIP 0.022uF 10% 25V
C219	1-163-037-11	s	CERAMIC, CHIP 0.022uF 10% 25V
C220	1-163-116-00	s	CERAMIC, CHIP 91pF 5% 50V
C221	1-163-243-11	s	CERAMIC, CHIP 47pF 5% 50V
C222	1-163-227-11	s	CERAMIC, CHIP 10pF 5% 50V
C223	1-163-121-00	s	CERAMIC, CHIP 150pF 5% 50V
C224	1-163-037-11	s	CERAMIC, CHIP 0.022uF 10% 25V
C225	1-163-087-00	s	CERAMIC, CHIP 4pF 50V
C226	1-163-037-11	s	CERAMIC, CHIP 0.022uF 10% 25V
C227	1-163-227-11	s	CERAMIC, CHIP 10pF 5% 50V
C228	1-163-231-11	s	CERAMIC, CHIP 15pF 5% 50V
C229	1-163-259-91	s	CERAMIC, CHIP 220pF 5% 50V
C230	1-126-390-11	s	ELECT, CHIP 22uF 20% 6.3V
C231	1-163-037-11	s	CERAMIC, CHIP 0.022uF 10% 25V
C232	1-163-037-11	s	CERAMIC, CHIP 0.022uF 10% 25V
C233	1-163-037-11	s	CERAMIC, CHIP 0.022uF 10% 25V
C234	1-163-037-11	s	CERAMIC, CHIP 0.022uF 10% 25V
C235	1-163-227-11	s	CERAMIC, CHIP 10pF 5% 50V
C301	1-126-391-11	s	ELECT, CHIP 47uF 20% 6.3V

(IO-149 BOARD(For PAL); Suffix -11)

Ref. No. or Q'ty	Part No.	SP	Description
C302	1-126-391-11	s	ELECT, CHIP 47uF 20% 6.3V
C303	1-163-038-91	s	CERAMIC, CHIP 0.1uF 25V
C304	1-126-391-11	s	ELECT, CHIP 47uF 20% 6.3V
C305	1-126-391-11	s	ELECT, CHIP 47uF 20% 6.3V
C306	1-163-038-91	s	CERAMIC, CHIP 0.1uF 25V
C307	1-163-038-91	s	CERAMIC, CHIP 0.1uF 25V
C308	1-163-038-91	s	CERAMIC, CHIP 0.1uF 25V
C309	1-163-231-11	s	CERAMIC, CHIP 15pF 5% 50V
C310	1-163-037-11	s	CERAMIC, CHIP 0.022uF 10% 25V
C311	1-163-259-91	s	CERAMIC, CHIP 220pF 5% 50V
C312	1-163-037-11	s	CERAMIC, CHIP 0.022uF 10% 25V
C313	1-163-038-91	s	CERAMIC, CHIP 0.1uF 25V
C314	1-163-038-91	s	CERAMIC, CHIP 0.1uF 25V
C315	1-163-037-11	s	CERAMIC, CHIP 0.022uF 10% 25V
C316	1-163-037-11	s	CERAMIC, CHIP 0.022uF 10% 25V
C317	1-163-037-11	s	CERAMIC, CHIP 0.022uF 10% 25V
C318	1-163-231-11	s	CERAMIC, CHIP 15pF 5% 50V
C319	1-163-259-91	s	CERAMIC, CHIP 220pF 5% 50V
C320	1-163-037-11	s	CERAMIC, CHIP 0.022uF 10% 25V
C321	1-126-391-11	s	ELECT, CHIP 47uF 20% 6.3V
C322	1-163-038-91	s	CERAMIC, CHIP 0.1uF 25V
C323	1-163-038-91	s	CERAMIC, CHIP 0.1uF 25V
C324	1-163-038-91	s	CERAMIC, CHIP 0.1uF 25V
C325	1-163-038-91	s	CERAMIC, CHIP 0.1uF 25V
C326	1-126-396-11	s	ELECT, CHIP 47uF 20% 16V
C327	1-126-391-11	s	ELECT, CHIP 47uF 20% 6.3V
C328	1-163-037-11	s	CERAMIC, CHIP 0.022uF 10% 25V
C329	1-126-396-11	s	ELECT, CHIP 47uF 20% 16V
C330	1-163-037-11	s	CERAMIC, CHIP 0.022uF 10% 25V
C331	1-126-396-11	s	ELECT, CHIP 47uF 20% 16V
C332	1-163-038-91	s	CERAMIC, CHIP 0.1uF 25V
C333	1-163-038-91	s	CERAMIC, CHIP 0.1uF 25V
C334	1-163-222-11	s	CERAMIC, CHIP 5pF 50V
C335	1-163-231-11	s	CERAMIC, CHIP 15pF 5% 50V
C336	1-163-037-11	s	CERAMIC, CHIP 0.022uF 10% 25V
C337	1-163-231-11	s	CERAMIC, CHIP 15pF 5% 50V
C338	1-163-038-91	s	CERAMIC, CHIP 0.1uF 25V
C339	1-163-243-11	s	CERAMIC, CHIP 47pF 5% 50V
C340	1-163-243-11	s	CERAMIC, CHIP 47pF 5% 50V
C341	1-163-239-11	s	CERAMIC, CHIP 33pF 5% 50V
C342	1-163-239-11	s	CERAMIC, CHIP 33pF 5% 50V
C343	1-126-392-11	s	ELECT, CHIP 100uF 20% 6.3V
C344	1-163-237-11	s	CERAMIC, CHIP 27pF 5% 50V
C345	1-163-237-11	s	CERAMIC, CHIP 27pF 5% 50V
C346	1-126-394-11	s	ELECT, CHIP 10uF 20% 16V
C347	1-126-394-11	s	ELECT, CHIP 10uF 20% 16V
C348	1-126-391-11	s	ELECT, CHIP 47uF 20% 6.3V
C349	1-163-809-11	s	CERAMIC, CHIP 0.047uF 10% 25V
C350	1-126-391-11	s	ELECT, CHIP 47uF 20% 6.3V
C351	1-163-038-91	s	CERAMIC, CHIP 0.1uF 25V
C352	1-163-037-11	s	CERAMIC, CHIP 0.022uF 10% 25V
C353	1-163-037-11	s	CERAMIC, CHIP 0.022uF 10% 25V
C354	1-163-038-91	s	CERAMIC, CHIP 0.1uF 25V
C355	1-163-227-11	s	CERAMIC, CHIP 10pF 5% 50V
C356	1-163-037-11	s	CERAMIC, CHIP 0.022uF 10% 25V
C357	1-163-037-11	s	CERAMIC, CHIP 0.022uF 10% 25V
C358	1-163-037-11	s	CERAMIC, CHIP 0.022uF 10% 25V
C359	1-163-038-91	s	CERAMIC, CHIP 0.1uF 25V
C360	1-163-038-91	s	CERAMIC, CHIP 0.1uF 25V

(IO-149 BOARD(For PAL); Suffix -11)

Ref. No. or Q'ty	Part No.	SP	Description	
C361	1-163-038-91	s	CERAMIC, CHIP 0.1uF 25V	
C362	1-163-237-11	s	CERAMIC, CHIP 27pF 5% 50V	
C363	1-163-037-11	s	CERAMIC, CHIP 0.022uF 10% 25V	
C364	1-163-037-11	s	CERAMIC, CHIP 0.022uF 10% 25V	
C365	1-163-222-11	s	CERAMIC, CHIP 5pF 50V	
C366	1-163-037-11	s	CERAMIC, CHIP 0.022uF 10% 25V	
C367	1-163-243-11	s	CERAMIC, CHIP 47pF 5% 50V	
C368	1-163-037-11	s	CERAMIC, CHIP 0.022uF 10% 25V	
C369	1-163-037-11	s	CERAMIC, CHIP 0.022uF 10% 25V	
C370	1-163-037-11	s	CERAMIC, CHIP 0.022uF 10% 25V	
C371	1-163-037-11	s	CERAMIC, CHIP 0.022uF 10% 25V	
C372	1-163-037-11	s	CERAMIC, CHIP 0.022uF 10% 25V	
C373	1-126-391-11	s	ELECT, CHIP 47uF 20% 6.3V	
C374	1-163-037-11	s	CERAMIC, CHIP 0.022uF 10% 25V	
C375	1-163-037-11	s	CERAMIC, CHIP 0.022uF 10% 25V	
C376	1-163-037-11	s	CERAMIC, CHIP 0.022uF 10% 25V	
C377	1-126-391-11	s	ELECT, CHIP 47uF 20% 6.3V	
C378	1-126-396-11	s	ELECT, CHIP 47uF 20% 16V	
C379	1-163-037-11	s	CERAMIC, CHIP 0.022uF 10% 25V	
C380	1-163-037-11	s	CERAMIC, CHIP 0.022uF 10% 25V	
C381	1-163-227-11	s	CERAMIC, CHIP 10pF 5% 50V	
C382	1-163-037-11	s	CERAMIC, CHIP 0.022uF 10% 25V	
C383	1-163-227-11	s	CERAMIC, CHIP 10pF 5% 50V	
C384	1-163-037-11	s	CERAMIC, CHIP 0.022uF 10% 25V	
C385	1-163-038-91	s	CERAMIC, CHIP 0.1uF 25V	
C386	1-163-038-91	s	CERAMIC, CHIP 0.1uF 25V	
C387	1-163-037-11	s	CERAMIC, CHIP 0.022uF 10% 25V	
C388	1-163-243-11	s	CERAMIC, CHIP 47pF 5% 50V	*3)
	1-163-113-00	s	CERAMIC, CHIP 68pF 5% 50V	*4)
C501	1-163-239-11	s	CERAMIC, CHIP 33pF 5% 50V	
C502	1-163-038-91	s	CERAMIC, CHIP 0.1uF 25V	
C503	1-126-394-11	s	ELECT, CHIP 10uF 20% 16V	
C504	1-126-394-11	s	ELECT, CHIP 10uF 20% 16V	
C505	1-126-394-11	s	ELECT, CHIP 10uF 20% 16V	
C506	1-163-037-11	s	CERAMIC, CHIP 0.022uF 10% 25V	
C507	1-126-396-11	s	ELECT, CHIP 47uF 20% 16V	
C508	1-126-396-11	s	ELECT, CHIP 47uF 20% 16V	
C509	1-126-394-11	s	ELECT, CHIP 10uF 20% 16V	
C510	1-126-394-11	s	ELECT, CHIP 10uF 20% 16V	
C511	1-126-401-11	s	ELECT, CHIP 1uF 20% 50V	
C512	1-163-235-11	s	CERAMIC, CHIP 22pF 5% 50V	
C513	1-164-222-11	s	CERAMIC, CHIP 0.22uF 25V	
C514	1-163-038-91	s	CERAMIC, CHIP 0.1uF 25V	
C515	1-163-038-91	s	CERAMIC, CHIP 0.1uF 25V	
C516	1-163-259-91	s	CERAMIC, CHIP 220pF 5% 50V	
C517	1-164-232-11	s	CERAMIC, CHIP 0.01uF 10% 100V	
C518	1-163-037-11	s	CERAMIC, CHIP 0.022uF 10% 25V	
C519	1-163-038-91	s	CERAMIC, CHIP 0.1uF 25V	
C520	1-163-038-91	s	CERAMIC, CHIP 0.1uF 25V	
C521	1-126-396-11	s	ELECT, CHIP 47uF 20% 16V	
C522	1-126-393-11	s	ELECT, CHIP 33uF 20% 10V	
C523	1-163-038-91	s	CERAMIC, CHIP 0.1uF 25V	
C524	1-163-239-11	s	CERAMIC, CHIP 33pF 5% 50V	
C525	1-163-259-91	s	CERAMIC, CHIP 220pF 5% 50V	
C526	1-163-038-91	s	CERAMIC, CHIP 0.1uF 25V	
C527	1-163-037-11	s	CERAMIC, CHIP 0.022uF 10% 25V	
C528	1-163-038-91	s	CERAMIC, CHIP 0.1uF 25V	
C529	1-163-037-11	s	CERAMIC, CHIP 0.022uF 10% 25V	

(IO-149 BOARD(For PAL); Suffix -11)

Ref. No. or Q'ty	Part No.	SP	Description
C530	1-163-038-91	s	CERAMIC, CHIP 0.1uF 25V
C531	1-163-038-91	s	CERAMIC, CHIP 0.1uF 25V
C532	1-163-038-91	s	CERAMIC, CHIP 0.1uF 25V
C533	1-163-038-91	s	CERAMIC, CHIP 0.1uF 25V
C534	1-126-391-11	s	ELECT, CHIP 47uF 20% 6.3V
C535	1-163-038-91	s	CERAMIC, CHIP 0.1uF 25V
C536	1-163-038-91	s	CERAMIC, CHIP 0.1uF 25V
C537	1-163-989-11	s	CERAMIC, CHIP 0.033uF 10% 25V
C538	1-163-121-00	s	CERAMIC, CHIP 150pF 5% 50V
C539	1-163-038-91	s	CERAMIC, CHIP 0.1uF 25V
C540	1-163-038-91	s	CERAMIC, CHIP 0.1uF 25V
C541	1-163-038-91	s	CERAMIC, CHIP 0.1uF 25V
C543	1-126-391-11	s	ELECT, CHIP 47uF 20% 6.3V
C544	1-126-391-11	s	ELECT, CHIP 47uF 20% 6.3V
C545	1-163-038-91	s	CERAMIC, CHIP 0.1uF 25V
C546	1-163-235-11	s	CERAMIC, CHIP 22pF 5% 50V
C547	1-163-037-11	s	CERAMIC, CHIP 0.022uF 10% 25V
C548	1-163-038-91	s	CERAMIC, CHIP 0.1uF 25V
C549	1-126-391-11	s	ELECT, CHIP 47uF 20% 6.3V
C550	1-163-251-11	s	CERAMIC, CHIP 100pF 5% 50V
C551	1-163-037-11	s	CERAMIC, CHIP 0.022uF 10% 25V
C553	1-124-589-11	s	ELECT 47uF 20% 16V
C601	1-163-037-11	s	CERAMIC, CHIP 0.022uF 10% 25V
C602	1-163-037-11	s	CERAMIC, CHIP 0.022uF 10% 25V
C603	1-163-037-11	s	CERAMIC, CHIP 0.022uF 10% 25V
C604	1-163-275-11	s	CERAMIC, CHIP 0.001uF 5% 50V
C605	1-126-401-11	s	ELECT, CHIP 1uF 20% 50V
C606	1-126-404-11	s	ELECT 4.7uF 20% 50V
C607	1-164-232-11	s	CERAMIC, CHIP 0.01uF 10% 100V
C608	1-163-037-11	s	CERAMIC, CHIP 0.022uF 10% 25V
C609	1-163-037-11	s	CERAMIC, CHIP 0.022uF 10% 25V
C610	1-163-259-91	s	CERAMIC, CHIP 220pF 5% 50V
C611	1-164-004-11	s	CERAMIC, CHIP 0.1uF 10% 25V
C612	1-163-227-11	s	CERAMIC, CHIP 10pF 5% 50V
C613	1-163-106-00	s	CERAMIC, CHIP 36pF 5% 50V
C614	1-163-243-11	s	CERAMIC, CHIP 47pF 5% 50V
C615	1-163-113-00	s	CERAMIC, CHIP 68pF 5% 50V
C616	1-164-232-11	s	CERAMIC, CHIP 0.01uF 10% 100V
C617	1-163-121-00	s	CERAMIC, CHIP 150pF 5% 50V
C618	1-164-232-11	s	CERAMIC, CHIP 0.01uF 10% 100V
C619	1-163-263-11	s	CERAMIC, CHIP 330pF 5% 50V
C620	1-163-809-11	s	CERAMIC, CHIP 0.047uF 10% 25V
C621	1-163-809-11	s	CERAMIC, CHIP 0.047uF 10% 25V
C622	1-163-038-91	s	CERAMIC, CHIP 0.1uF 25V
C623	1-163-038-91	s	CERAMIC, CHIP 0.1uF 25V
C624	1-163-038-91	s	CERAMIC, CHIP 0.1uF 25V
C625	1-163-037-11	s	CERAMIC, CHIP 0.022uF 10% 25V
C626	1-163-227-11	s	CERAMIC, CHIP 10pF 5% 50V
C627	1-126-391-11	s	ELECT, CHIP 47uF 20% 6.3V
C628	1-163-037-11	s	CERAMIC, CHIP 0.022uF 10% 25V
C629	1-126-391-11	s	ELECT, CHIP 47uF 20% 6.3V
C631	1-163-227-11	s	CERAMIC, CHIP 10pF 5% 50V
C632	1-126-401-11	s	ELECT, CHIP 1uF 20% 50V
C633	1-163-037-11	s	CERAMIC, CHIP 0.022uF 10% 25V
C634	1-163-243-11	s	CERAMIC, CHIP 47pF 5% 50V
C635	1-163-037-11	s	CERAMIC, CHIP 0.022uF 10% 25V
C636	1-163-037-11	s	CERAMIC, CHIP 0.022uF 10% 25V
C637	1-163-037-11	s	CERAMIC, CHIP 0.022uF 10% 25V
C638	1-163-038-91	s	CERAMIC, CHIP 0.1uF 25V

(IO-149 BOARD(For PAL); Suffix -11)

Ref. No. or Q'ty	Part No.	SP	Description
C639	1-163-102-00	s	CERAMIC, CHIP 24pF 5% 50V
C640	1-163-037-11	s	CERAMIC, CHIP 0.022uF 10% 25V
C641	1-163-038-91	s	CERAMIC, CHIP 0.1uF 25V
C642	1-163-037-11	s	CERAMIC, CHIP 0.022uF 10% 25V
C643	1-163-243-11	s	CERAMIC, CHIP 47pF 5% 50V
C644	1-163-037-11	s	CERAMIC, CHIP 0.022uF 10% 25V
C645	1-126-393-11	s	ELECT, CHIP 33uF 20% 10V
C646	1-163-037-11	s	CERAMIC, CHIP 0.022uF 10% 25V
C647	1-163-037-11	s	CERAMIC, CHIP 0.022uF 10% 25V
C648	1-163-037-11	s	CERAMIC, CHIP 0.022uF 10% 25V
C649	1-163-037-11	s	CERAMIC, CHIP 0.022uF 10% 25V
C650	1-126-393-11	s	ELECT, CHIP 33uF 20% 10V
C651	1-163-037-11	s	CERAMIC, CHIP 0.022uF 10% 25V
C652	1-163-239-11	s	CERAMIC, CHIP 33pF 5% 50V
C653	1-163-239-11	s	CERAMIC, CHIP 33pF 5% 50V
C654	1-163-113-00	s	CERAMIC, CHIP 68pF 5% 50V
C655	1-163-113-00	s	CERAMIC, CHIP 68pF 5% 50V
C656	1-163-239-11	s	CERAMIC, CHIP 33pF 5% 50V
C657	1-163-239-11	s	CERAMIC, CHIP 33pF 5% 50V
C658	1-163-037-11	s	CERAMIC, CHIP 0.022uF 10% 25V
C659	1-163-037-11	s	CERAMIC, CHIP 0.022uF 10% 25V
C660	1-163-037-11	s	CERAMIC, CHIP 0.022uF 10% 25V
C661	1-163-037-11	s	CERAMIC, CHIP 0.022uF 10% 25V
C663	1-163-133-00	s	CERAMIC, CHIP 470pF 5% 50V
CT601	1-141-345-11	s	CAP, TRIMMER, CHIP 40pF
CT602	1-141-345-11	s	CAP, TRIMMER, CHIP 40pF
D1	8-719-941-04	s	DIODE SB007-03CP
D2	8-719-941-04	s	DIODE SB007-03CP
D3	8-719-053-18	s	DIODE 1SR154-400TE-25
D4	8-719-053-18	s	DIODE 1SR154-400TE-25
D5	8-719-053-18	s	DIODE 1SR154-400TE-25
D101	8-719-041-39	s	DIODE KV1470
D102	8-719-041-39	s	DIODE KV1470
D103	8-719-041-39	s	DIODE KV1470
D104	8-719-941-23	s	DIODE DA204U
D105	8-719-941-23	s	DIODE DA204U
D106	8-719-989-08	s	DIODE RB717F
D301	8-719-976-99	s	DIODE DTZ5.1B
D302	8-719-941-23	s	DIODE DA204U
D501	8-719-941-23	s	DIODE DA204U
D502	8-719-109-87	s	DIODE RD5.6ESB
D601	8-719-002-81	s	DIODE 1T363A-M20-T8A
D602	8-719-002-81	s	DIODE 1T363A-M20-T8A
E101	1-535-877-22	o	CHECKER, CHIP
E102	1-535-877-22	o	CHECKER, CHIP
E103	1-535-877-22	o	CHECKER, CHIP
E301	1-535-877-22	o	CHECKER, CHIP
E501	1-535-877-22	o	CHECKER, CHIP
E601	1-535-877-22	o	CHECKER, CHIP
F1	⚠ 1-576-124-11	s	LINK, IC, CHIP 1A
F2	⚠ 1-533-282-21	s	LINK, IC, CHIP 2A
F3	⚠ 1-576-124-11	s	LINK, IC, CHIP 1A
F4	⚠ 1-533-282-21	s	LINK, IC, CHIP 2A
F5	⚠ 1-576-124-11	s	LINK, IC, CHIP 1A
F6	⚠ 1-533-282-21	s	LINK, IC, CHIP 2A
FL101	1-233-599-11	s	FILTER, LOW-PASS

(IO-149 BOARD(For PAL); Suffix -11)

Ref. No. or Q'ty	Part No.	SP	Description	
FL102	1-233-599-11	s	FILTER, LOW-PASS	
FL103	1-233-614-11	s	FILTER, LOW-PASS	
FL104	1-239-771-11	s	FILTER, LOW-PASS	
FL1001	1-239-719-11	s	FILTER, NOISE, CHIP	
FL1002	1-239-719-11	s	FILTER, NOISE, CHIP	
FL1003	1-239-719-11	s	FILTER, NOISE, CHIP	
IC1	8-759-157-17	s	IC PQ05SZ1U	
IC2	8-759-157-17	s	IC PQ05SZ1U	
IC3	8-759-172-40	s	IC L78M09T-FA	
IC4	8-759-172-40	s	IC L78M09T-FA	
IC5	8-759-822-95	s	IC L79M05T-FA	
IC6	8-759-822-95	s	IC L79M05T-FA	
IC7	8-759-822-95	s	IC L79M05T-FA	
IC8	8-759-157-17	s	IC PQ05SZ1U	
IC101	8-759-198-63	s	IC S-81230SG-QB-T1	
IC102	8-759-278-58	s	IC NJM4558V-TE2	
IC103	8-759-278-58	s	IC NJM4558V-TE2	
IC105	8-759-278-58	s	IC NJM4558V-TE2	
IC107	8-759-076-06	s	IC TL064CPW	
IC108	8-759-076-06	s	IC TL064CPW	
IC109	8-752-052-77	s	IC CXA1450M	
IC110	8-752-363-60	s	IC CXD2307R-T6	
IC111	8-759-076-06	s	IC TL064CPW	*1)
	8-759-287-54	s	IC TL084CPW-E20	*2)
IC112	8-759-076-06	s	IC TL064CPW	*1)
	8-759-287-54	s	IC TL084CPW-E20	*2)
IC113	8-759-076-06	s	IC TL064CPW	*1)
	8-759-287-54	s	IC TL084CPW-E20	*2)
IC114	8-759-066-59	s	IC TC74HC4053AFS	
IC115	8-752-054-80	s	IC CXA1521M	
IC116	8-752-054-80	s	IC CXA1521M	
IC117	8-759-906-59	s	IC CX22017	
IC118	8-759-907-81	s	IC SN74LS221NS	
IC301	8-759-082-59	s	IC TC7W32FU	
IC302	8-759-082-61	s	IC TC4W53FU	
IC303	8-759-262-03	s	IC MC14577CF	
IC304	8-759-076-06	s	IC TL064CPW	*1)
	8-759-287-54	s	IC TL084CPW-E20	*2)
IC305	8-759-082-61	s	IC TC4W53FU	
IC306	8-752-052-73	s	IC CXA1451M	
IC307	8-752-052-73	s	IC CXA1451M	
IC308	8-759-262-00	s	IC MC14576CF	
IC309	8-752-052-73	s	IC CXA1451M	
IC310	8-752-052-73	s	IC CXA1451M	
IC311	8-752-052-73	s	IC CXA1451M	
IC312	8-759-082-61	s	IC TC4W53FU	
IC501	8-759-082-57	s	IC TC7W04FU	
IC502	8-752-052-77	s	IC CXA1450M	
IC503	8-752-052-77	s	IC CXA1450M	
IC504	8-759-173-16	s	IC TL062CPW	
IC505	8-759-076-06	s	IC TL064CPW	
IC506	8-759-430-88	s	IC TC74HC4051AFS(EL)	
IC507	8-759-324-03	s	IC HA17431UA-TL	

(IO-149 BOARD(For PAL); Suffix -11)

Ref. No. or Q'ty	Part No.	SP	Description
IC508	8-759-076-06	s	IC TL064CPW
IC509	8-752-052-77	s	IC CXA1450M
IC510	8-752-052-73	s	IC CXA1451M
IC512	8-759-987-27	s	IC LM1881M
IC513	8-759-079-66	s	IC TC74VHC123AFS(EL)
IC514	8-759-980-04	s	IC LM311PS
IC515	8-759-702-08	s	IC NJM360M
IC601	8-759-082-57	s	IC TC7W04FU
IC602	8-759-250-81	s	IC TC5081AP
IC603	8-759-079-67	s	IC TC74VHC125FS(EL)
IC604	8-759-058-57	s	IC TC7S04FU-TE85L
IC605	8-759-357-24	s	IC MC68HC705C8AFU
IC606	8-752-335-47	s	IC CXD1216M
IC607	8-759-066-59	s	IC TC74HC4053AFS
IC608	8-759-241-03	s	IC TC74HC191AF
IC609	8-759-082-57	s	IC TC7W04FU
IC610	8-759-271-86	s	IC TC7SH04FU
IC611	8-759-271-86	s	IC TC7SH04FU
IC612	8-759-079-66	s	IC TC74VHC123AFS(EL)
IC613	8-759-079-80	s	IC TC74VHC175FS(EL)
IC614	8-759-519-49	s	IC CXD8165Q
IC615	8-752-339-46	s	IC CXD1177Q
IC616	8-759-082-57	s	IC TC7W04FU
IC617	8-759-066-59	s	IC TC74HC4053AFS
IC618	8-759-271-86	s	IC TC7SH04FU
IC619	8-759-271-86	s	IC TC7SH04FU
L101	1-414-402-11	s	INDUCTOR, CHIP 47uH
L102	1-414-400-11	s	INDUCTOR, CHIP 22uH
L103	1-414-400-11	s	INDUCTOR, CHIP 22uH
L104	1-414-402-11	s	INDUCTOR, CHIP 47uH
L105	1-414-402-11	s	INDUCTOR, CHIP 47uH
L106	1-414-400-11	s	INDUCTOR, CHIP 22uH
L107	1-414-400-11	s	INDUCTOR, CHIP 22uH
L108	1-414-402-11	s	INDUCTOR, CHIP 47uH
L109	1-414-402-11	s	INDUCTOR, CHIP 47uH
L110	1-414-402-11	s	INDUCTOR, CHIP 47uH
L111	1-414-402-11	s	INDUCTOR, CHIP 47uH
L112	1-414-404-11	s	INDUCTOR, CHIP 100uH
L113	1-414-402-11	s	INDUCTOR, CHIP 47uH
L114	1-414-404-11	s	INDUCTOR, CHIP 100uH
L115	1-410-385-11	s	INDUCTOR, CHIP 22uH
L116	1-410-385-11	s	INDUCTOR, CHIP 22uH
L117	1-410-393-11	s	INDUCTOR, CHIP 100uH
L301	1-414-402-11	s	INDUCTOR, CHIP 47uH
L302	1-414-402-11	s	INDUCTOR, CHIP 47uH
L303	1-414-402-11	s	INDUCTOR, CHIP 47uH
L304	1-414-402-11	s	INDUCTOR, CHIP 47uH
L305	1-410-393-11	s	INDUCTOR, CHIP 100uH
L306	1-410-393-11	s	INDUCTOR, CHIP 100uH
L307	1-414-402-11	s	INDUCTOR, CHIP 47uH
L308	1-414-402-11	s	INDUCTOR, CHIP 47uH
L309	1-414-402-11	s	INDUCTOR, CHIP 47uH
L310	1-410-387-11	s	INDUCTOR, CHIP 33uH
L311	1-410-387-11	s	INDUCTOR, CHIP 33uH
L312	1-414-402-11	s	INDUCTOR, CHIP 47uH
L313	1-414-402-11	s	INDUCTOR, CHIP 47uH
L314	1-410-389-31	s	INDUCTOR, CHIP 47uH
L315	1-410-387-11	s	INDUCTOR, CHIP 33uH

(IO-149 BOARD(For PAL); Suffix -11)

Ref. No. or Q'ty	Part No.	SP	Description
L501	1-410-392-11	s	INDUCTOR, CHIP 82uH
L502	1-410-393-11	s	INDUCTOR, CHIP 100uH
L503	1-414-402-11	s	INDUCTOR, CHIP 47uH
L504	1-414-402-11	s	INDUCTOR, CHIP 47uH
L505	1-410-391-11	s	INDUCTOR, CHIP 68uH
L506	1-414-402-11	s	INDUCTOR, CHIP 47uH
L507	1-414-402-11	s	INDUCTOR, CHIP 47uH
L601	1-414-402-11	s	INDUCTOR, CHIP 47uH
L602	1-414-402-11	s	INDUCTOR, CHIP 47uH
L603	1-414-400-11	s	INDUCTOR, CHIP 22uH
L604	1-414-400-11	s	INDUCTOR, CHIP 22uH
L605	1-410-386-11	s	INDUCTOR, CHIP 27uH
L606	1-410-386-11	s	INDUCTOR, CHIP 27uH
L607	1-410-386-11	s	INDUCTOR, CHIP 27uH
L608	1-410-386-11	s	INDUCTOR, CHIP 27uH
Q101	8-729-117-32	s	TRANSISTOR 2SC4177
Q102	8-729-117-32	s	TRANSISTOR 2SC4177
Q103	8-729-117-32	s	TRANSISTOR 2SC4177
Q104	8-729-140-63	s	TRANSISTOR 2SA1611-M5M6
Q105	8-729-117-32	s	TRANSISTOR 2SC4177
Q106	8-729-117-32	s	TRANSISTOR 2SC4177
Q107	8-729-117-32	s	TRANSISTOR 2SC4177
Q108	8-729-923-06	s	TRANSISTOR FMW-8
Q109	8-729-923-06	s	TRANSISTOR FMW-8
Q110	8-729-923-06	s	TRANSISTOR FMW-8
Q111	8-729-904-04	s	TRANSISTOR FMS2
Q112	8-729-904-04	s	TRANSISTOR FMS2
Q113	8-729-904-04	s	TRANSISTOR FMS2
Q114	8-729-903-82	s	TRANSISTOR FMW2
Q115	8-729-903-82	s	TRANSISTOR FMW2
Q116	8-729-903-82	s	TRANSISTOR FMW2
Q117	8-729-931-46	s	TRANSISTOR FMW7
Q118	8-729-931-46	s	TRANSISTOR FMW7
Q119	8-729-931-46	s	TRANSISTOR FMW7
Q120	8-729-907-26	s	TRANSISTOR IMX1
Q121	8-729-907-26	s	TRANSISTOR IMX1
Q122	8-729-907-26	s	TRANSISTOR IMX1
Q123	8-729-143-14	s	TRANSISTOR 2SC4176-B35
Q124	8-729-117-32	s	TRANSISTOR 2SC4177
Q125	8-729-140-63	s	TRANSISTOR 2SA1611-M5M6
Q126	8-729-117-32	s	TRANSISTOR 2SC4177
Q127	8-729-143-14	s	TRANSISTOR 2SC4176-B35
Q128	8-729-140-63	s	TRANSISTOR 2SA1611-M5M6
Q129	8-729-903-82	s	TRANSISTOR FMW2
Q130	8-729-117-32	s	TRANSISTOR 2SC4177
Q131	8-729-903-82	s	TRANSISTOR FMW2
Q301	8-729-143-14	s	TRANSISTOR 2SC4176-B35
Q302	8-729-904-41	s	TRANSISTOR FMY3
Q303	8-729-140-63	s	TRANSISTOR 2SA1611-M5M6
Q304	8-729-140-63	s	TRANSISTOR 2SA1611-M5M6
Q305	8-729-117-32	s	TRANSISTOR 2SC4177
Q306	8-729-117-32	s	TRANSISTOR 2SC4177
Q307	8-729-907-26	s	TRANSISTOR IMX1
Q308	8-729-117-32	s	TRANSISTOR 2SC4177
Q309	8-729-117-32	s	TRANSISTOR 2SC4177
Q310	8-729-143-14	s	TRANSISTOR 2SC4176-B35
Q311	8-729-117-32	s	TRANSISTOR 2SC4177
Q312	8-729-907-26	s	TRANSISTOR IMX1
Q313	8-729-140-63	s	TRANSISTOR 2SA1611-M5M6

(IO-149 BOARD(For PAL); Suffix -11)

Ref. No. or Q'ty	Part No.	SP	Description
Q314	8-729-140-63	s	TRANSISTOR 2SA1611-M5M6
Q315	8-729-117-32	s	TRANSISTOR 2SC4177
Q316	8-729-140-63	s	TRANSISTOR 2SA1611-M5M6
Q317	8-729-117-32	s	TRANSISTOR 2SC4177
Q318	8-729-904-41	s	TRANSISTOR FMY3
Q319	8-729-904-41	s	TRANSISTOR FMY3
Q320	8-729-117-32	s	TRANSISTOR 2SC4177
Q321	8-729-117-32	s	TRANSISTOR 2SC4177
Q322	8-729-117-32	s	TRANSISTOR 2SC4177
Q323	8-729-143-14	s	TRANSISTOR 2SC4176-B35
Q324	8-729-140-63	s	TRANSISTOR 2SA1611-M5M6
Q325	8-729-140-63	s	TRANSISTOR 2SA1611-M5M6
Q326	8-729-117-32	s	TRANSISTOR 2SC4177
Q327	8-729-117-32	s	TRANSISTOR 2SC4177
Q328	8-729-117-32	s	TRANSISTOR 2SC4177
Q329	8-729-117-32	s	TRANSISTOR 2SC4177
Q330	8-729-117-32	s	TRANSISTOR 2SC4177
Q331	8-729-904-41	s	TRANSISTOR FMY3
Q332	8-729-422-44	s	TRANSISTOR 2SK663
Q333	8-729-422-44	s	TRANSISTOR 2SK663
Q334	8-729-422-44	s	TRANSISTOR 2SK663
Q335	8-729-422-44	s	TRANSISTOR 2SK663
Q336	8-729-140-63	s	TRANSISTOR 2SA1611-M5M6
Q337	8-729-140-63	s	TRANSISTOR 2SA1611-M5M6
Q338	8-729-140-63	s	TRANSISTOR 2SA1611-M5M6
Q339	8-729-140-63	s	TRANSISTOR 2SA1611-M5M6
Q340	8-729-117-32	s	TRANSISTOR 2SC4177
Q341	8-729-907-26	s	TRANSISTOR IMX1
Q342	8-729-907-26	s	TRANSISTOR IMX1
Q343	8-729-117-32	s	TRANSISTOR 2SC4177
Q344	8-729-117-32	s	TRANSISTOR 2SC4177
Q345	8-729-907-26	s	TRANSISTOR IMX1
Q346	8-729-117-32	s	TRANSISTOR 2SC4177
Q347	8-729-907-26	s	TRANSISTOR IMX1
Q348	8-729-117-32	s	TRANSISTOR 2SC4177
Q349	8-729-140-63	s	TRANSISTOR 2SA1611-M5M6
Q350	8-729-140-63	s	TRANSISTOR 2SA1611-M5M6
Q501	8-729-117-32	s	TRANSISTOR 2SC4177
Q502	8-729-117-32	s	TRANSISTOR 2SC4177
Q503	8-729-117-32	s	TRANSISTOR 2SC4177
Q504	8-729-117-32	s	TRANSISTOR 2SC4177
Q505	8-729-117-32	s	TRANSISTOR 2SC4177
Q506	8-729-904-41	s	TRANSISTOR FMY3
Q507	8-729-117-32	s	TRANSISTOR 2SC4177
Q508	8-729-117-32	s	TRANSISTOR 2SC4177
Q509	8-729-117-32	s	TRANSISTOR 2SC4177
Q601	8-729-140-47	s	TRANSISTOR 2SC3735-B34
Q602	8-729-140-47	s	TRANSISTOR 2SC3735-B34
Q603	8-729-140-47	s	TRANSISTOR 2SC3735-B34
Q604	8-729-140-47	s	TRANSISTOR 2SC3735-B34
Q605	8-729-117-32	s	TRANSISTOR 2SC4177
Q606	8-729-117-32	s	TRANSISTOR 2SC4177
Q607	8-729-117-32	s	TRANSISTOR 2SC4177
Q608	8-729-117-32	s	TRANSISTOR 2SC4177
R101	1-216-672-11	s	METAL, CHIP 7.5k 0.5% 1/10W
R102	1-216-665-11	s	METAL, CHIP 3.9k 0.5% 1/10W
R103	1-216-667-11	s	METAL, CHIP 4.7k 0.5% 1/10W
R104	1-216-675-11	s	METAL, CHIP 10k 0.5% 1/10W
R105	1-216-041-00	s	METAL, CHIP 470 5% 1/10W

(IO-149 BOARD(For PAL); Suffix -11)

Ref. No. or Q'ty	Part No.	SP	Description
R106	1-216-295-91	s	RES, CHIP 0
R107	1-216-652-11	s	METAL, CHIP 1.1k 0.5% 1/10W
R108	1-216-668-11	s	METAL, CHIP 5.1k 0.5% 1/10W
R110	1-216-295-91	s	RES, CHIP 0
R112	1-216-295-91	s	RES, CHIP 0
R113	1-216-668-11	s	METAL, CHIP 5.1k 0.5% 1/10W
R114	1-216-665-11	s	METAL, CHIP 3.9k 0.5% 1/10W
R115	1-216-663-11	s	METAL, CHIP 3.3k 0.5% 1/10W
R116	1-216-073-00	s	METAL, CHIP 10k 5% 1/10W
R117	1-216-655-11	s	METAL, CHIP 1.5k 0.5% 1/10W
R118	1-216-657-11	s	METAL, CHIP 1.8k 0.5% 1/10W
R119	1-216-675-11	s	METAL, CHIP 10k 0.5% 1/10W
R120	1-216-675-11	s	METAL, CHIP 10k 0.5% 1/10W
R121	1-216-073-00	s	METAL, CHIP 10k 5% 1/10W
R122	1-216-073-00	s	METAL, CHIP 10k 5% 1/10W
R123	1-216-085-00	s	METAL, CHIP 33k 5% 1/10W
R124	1-216-085-00	s	METAL, CHIP 33k 5% 1/10W
R125	1-216-121-91	s	METAL, CHIP 1M 5% 1/10W
R126	1-216-121-91	s	METAL, CHIP 1M 5% 1/10W
R127	1-216-085-00	s	METAL, CHIP 33k 5% 1/10W
R128	1-216-085-00	s	METAL, CHIP 33k 5% 1/10W
R129	1-216-121-91	s	METAL, CHIP 1M 5% 1/10W
R130	1-216-121-91	s	METAL, CHIP 1M 5% 1/10W
R131	1-216-033-00	s	METAL, CHIP 220 5% 1/10W
R132	1-216-033-00	s	METAL, CHIP 220 5% 1/10W
R133	1-216-053-00	s	METAL, CHIP 1.5k 5% 1/10W
R134	1-216-053-00	s	METAL, CHIP 1.5k 5% 1/10W
R135	1-216-675-11	s	METAL, CHIP 10k 0.5% 1/10W
R136	1-216-073-00	s	METAL, CHIP 10k 5% 1/10W
R137	1-216-081-00	s	METAL, CHIP 22k 5% 1/10W
R138	1-216-121-91	s	METAL, CHIP 1M 5% 1/10W
R139	1-216-085-00	s	METAL, CHIP 33k 5% 1/10W
R140	1-216-121-91	s	METAL, CHIP 1M 5% 1/10W
R141	1-216-033-00	s	METAL, CHIP 220 5% 1/10W
R144	1-216-677-11	s	METAL, CHIP 12k 0.5% 1/10W
R145	1-216-678-11	s	METAL, CHIP 13k 0.5% 1/10W
R146	1-216-678-11	s	METAL, CHIP 13k 0.5% 1/10W
R147	1-216-667-11	s	METAL, CHIP 4.7k 0.5% 1/10W
R148	1-216-678-11	s	METAL, CHIP 13k 0.5% 1/10W
R149	1-216-659-11	s	METAL, CHIP 2.2k 0.5% 1/10W
R150	1-216-673-11	s	METAL, CHIP 8.2k 0.5% 1/10W
R151	1-216-659-11	s	METAL, CHIP 2.2k 0.5% 1/10W
R152	1-216-661-11	s	METAL, CHIP 2.7k 0.5% 1/10W
R153	1-216-661-11	s	METAL, CHIP 2.7k 0.5% 1/10W
R154	1-216-085-00	s	METAL, CHIP 33k 5% 1/10W
R155	1-216-675-11	s	METAL, CHIP 10k 0.5% 1/10W
R156	1-216-675-11	s	METAL, CHIP 10k 0.5% 1/10W
R157	1-216-679-11	s	METAL, CHIP 15k 0.5% 1/10W
R158	1-216-679-11	s	METAL, CHIP 15k 0.5% 1/10W
R159	1-216-659-11	s	METAL, CHIP 2.2k 0.5% 1/10W
R160	1-216-679-11	s	METAL, CHIP 15k 0.5% 1/10W
R161	1-216-679-11	s	METAL, CHIP 15k 0.5% 1/10W
R162	1-216-661-11	s	METAL, CHIP 2.7k 0.5% 1/10W
R163	1-216-679-11	s	METAL, CHIP 15k 0.5% 1/10W
R164	1-216-671-11	s	METAL, CHIP 6.8k 0.5% 1/10W
R165	1-216-671-11	s	METAL, CHIP 6.8k 0.5% 1/10W
R166	1-216-679-11	s	METAL, CHIP 15k 0.5% 1/10W
R167	1-216-663-11	s	METAL, CHIP 3.3k 0.5% 1/10W
R168	1-216-659-11	s	METAL, CHIP 2.2k 0.5% 1/10W

(IO-149 BOARD(For PAL); Suffix -11)

Ref. No. or Q'ty	Part No.	SP	Description
R169	1-216-081-00	s	METAL, CHIP 22k 5% 1/10W
R170	1-216-081-00	s	METAL, CHIP 22k 5% 1/10W
R171	1-216-081-00	s	METAL, CHIP 22k 5% 1/10W
R172	1-216-645-11	s	METAL, CHIP 560 0.5% 1/10W
R173	1-216-665-11	s	METAL, CHIP 3.9k 0.5% 1/10W
R174	1-216-665-11	s	METAL, CHIP 3.9k 0.5% 1/10W
R175	1-216-089-91	s	METAL, CHIP 47k 5% 1/10W
R176	1-216-667-11	s	METAL, CHIP 4.7k 0.5% 1/10W
R177	1-216-089-91	s	METAL, CHIP 47k 5% 1/10W
R178	1-216-089-91	s	METAL, CHIP 47k 5% 1/10W
R179	1-216-639-11	s	METAL, CHIP 330 0.5% 1/10W
R180	1-216-639-11	s	METAL, CHIP 330 0.5% 1/10W
R181	1-216-639-11	s	METAL, CHIP 330 0.5% 1/10W
R182	1-216-639-11	s	METAL, CHIP 330 0.5% 1/10W
R183	1-216-639-11	s	METAL, CHIP 330 0.5% 1/10W
R184	1-216-639-11	s	METAL, CHIP 330 0.5% 1/10W
R185	1-216-045-00	s	METAL, CHIP 680 5% 1/10W
R186	1-216-045-00	s	METAL, CHIP 680 5% 1/10W
R187	1-216-017-91	s	METAL, CHIP 47 5% 1/10W
R188	1-216-017-91	s	METAL, CHIP 47 5% 1/10W
R189	1-216-045-00	s	METAL, CHIP 680 5% 1/10W
R190	1-216-017-91	s	METAL, CHIP 47 5% 1/10W
R191	1-216-017-91	s	METAL, CHIP 47 5% 1/10W
R192	1-216-017-91	s	METAL, CHIP 47 5% 1/10W
R193	1-216-017-91	s	METAL, CHIP 47 5% 1/10W
R194	1-216-057-00	s	METAL, CHIP 2.2k 5% 1/10W
R195	1-216-057-00	s	METAL, CHIP 2.2k 5% 1/10W
R196	1-216-057-00	s	METAL, CHIP 2.2k 5% 1/10W
R197	1-216-049-91	s	METAL, CHIP 1k 5% 1/10W
R198	1-216-049-91	s	METAL, CHIP 1k 5% 1/10W
R199	1-216-049-91	s	METAL, CHIP 1k 5% 1/10W
R200	1-216-049-91	s	METAL, CHIP 1k 5% 1/10W
R201	1-216-049-91	s	METAL, CHIP 1k 5% 1/10W
R202	1-216-049-91	s	METAL, CHIP 1k 5% 1/10W
R203	1-216-057-00	s	METAL, CHIP 2.2k 5% 1/10W
R204	1-216-057-00	s	METAL, CHIP 2.2k 5% 1/10W
R205	1-216-057-00	s	METAL, CHIP 2.2k 5% 1/10W
R206	1-216-033-00	s	METAL, CHIP 220 5% 1/10W
R207	1-216-033-00	s	METAL, CHIP 220 5% 1/10W
R208	1-216-033-00	s	METAL, CHIP 220 5% 1/10W
R209	1-216-045-00	s	METAL, CHIP 680 5% 1/10W
R210	1-216-045-00	s	METAL, CHIP 680 5% 1/10W
R211	1-216-045-00	s	METAL, CHIP 680 5% 1/10W
R212	1-216-077-00	s	METAL, CHIP 15k 5% 1/10W
R213	1-216-077-00	s	METAL, CHIP 15k 5% 1/10W
R214	1-216-077-00	s	METAL, CHIP 15k 5% 1/10W
R215	1-216-027-00	s	METAL, CHIP 120 5% 1/10W
R216	1-216-027-00	s	METAL, CHIP 120 5% 1/10W
R217	1-216-027-00	s	METAL, CHIP 120 5% 1/10W
R218	1-216-045-00	s	METAL, CHIP 680 5% 1/10W
R219	1-216-045-00	s	METAL, CHIP 680 5% 1/10W
R220	1-216-295-91	s	RES, CHIP 0
R221	1-216-017-91	s	METAL, CHIP 47 5% 1/10W
R222	1-216-017-91	s	METAL, CHIP 47 5% 1/10W
R223	1-216-017-91	s	METAL, CHIP 47 5% 1/10W
R224	1-216-651-11	s	METAL, CHIP 1k 0.5% 1/10W
R225	1-216-659-11	s	METAL, CHIP 2.2k 0.5% 1/10W
R226	1-216-651-11	s	METAL, CHIP 1k 0.5% 1/10W
R227	1-216-659-11	s	METAL, CHIP 2.2k 0.5% 1/10W

(IO-149 BOARD(For PAL); Suffix -11)

Ref. No. or Q'ty	Part No.	SP	Description
R228	1-216-049-91	s	METAL, CHIP 1k 5% 1/10W
R229	1-216-659-11	s	METAL, CHIP 2.2k 0.5% 1/10W
R230	1-216-651-11	s	METAL, CHIP 1k 0.5% 1/10W
R231	1-216-121-91	s	METAL, CHIP 1M 5% 1/10W
R232	1-216-049-91	s	METAL, CHIP 1k 5% 1/10W
R233	1-216-049-91	s	METAL, CHIP 1k 5% 1/10W
R234	1-216-121-91	s	METAL, CHIP 1M 5% 1/10W
R235	1-216-121-91	s	METAL, CHIP 1M 5% 1/10W
R236	1-216-049-91	s	METAL, CHIP 1k 5% 1/10W
R237	1-216-049-91	s	METAL, CHIP 1k 5% 1/10W
R238	1-216-049-91	s	METAL, CHIP 1k 5% 1/10W
R239	1-216-049-91	s	METAL, CHIP 1k 5% 1/10W
R240	1-216-049-91	s	METAL, CHIP 1k 5% 1/10W
R241	1-216-089-91	s	METAL, CHIP 47k 5% 1/10W
R242	1-216-049-91	s	METAL, CHIP 1k 5% 1/10W
R243	1-216-089-91	s	METAL, CHIP 47k 5% 1/10W
R244	1-216-073-00	s	METAL, CHIP 10k 5% 1/10W
R245	1-216-649-11	s	METAL, CHIP 820 0.5% 1/10W
R246	1-216-057-00	s	METAL, CHIP 2.2k 5% 1/10W
R247	1-216-651-11	s	METAL, CHIP 1k 0.5% 1/10W
R248	1-216-057-00	s	METAL, CHIP 2.2k 5% 1/10W
R249	1-216-643-11	s	METAL, CHIP 470 0.5% 1/10W
R250	1-216-639-11	s	METAL, CHIP 330 0.5% 1/10W
R251	1-216-643-11	s	METAL, CHIP 470 0.5% 1/10W
R252	1-216-677-11	s	METAL, CHIP 12k 0.5% 1/10W
R253	1-216-683-11	s	METAL, CHIP 22k 0.5% 1/10W
R254	1-216-681-11	s	METAL, CHIP 18k 0.5% 1/10W
R255	1-216-683-11	s	METAL, CHIP 22k 0.5% 1/10W
R256	1-216-097-91	s	METAL, CHIP 100k 5% 1/10W
R257	1-216-089-91	s	METAL, CHIP 47k 5% 1/10W
R258	1-216-295-91	s	RES, CHIP 0
R259	1-216-675-11	s	METAL, CHIP 10k 0.5% 1/10W
R260	1-216-073-00	s	METAL, CHIP 10k 5% 1/10W
R261	1-216-049-91	s	METAL, CHIP 1k 5% 1/10W
R262	1-216-682-11	s	METAL, CHIP 20k 0.5% 1/10W
R263	1-216-065-00	s	METAL, CHIP 4.7k 5% 1/10W
R264	1-216-065-00	s	METAL, CHIP 4.7k 5% 1/10W
R265	1-216-049-91	s	METAL, CHIP 1k 5% 1/10W
R266	1-216-049-91	s	METAL, CHIP 1k 5% 1/10W
R267	1-216-049-91	s	METAL, CHIP 1k 5% 1/10W
R268	1-216-049-91	s	METAL, CHIP 1k 5% 1/10W
R269	1-216-057-00	s	METAL, CHIP 2.2k 5% 1/10W
R270	1-216-647-11	s	METAL, CHIP 680 0.5% 1/10W
R271	1-216-081-00	s	METAL, CHIP 22k 5% 1/10W
R272	1-216-666-11	s	METAL, CHIP 4.3k 0.5% 1/10W
R273	1-216-651-11	s	METAL, CHIP 1k 0.5% 1/10W
R274	1-216-661-11	s	METAL, CHIP 2.7k 0.5% 1/10W
R275	1-216-057-00	s	METAL, CHIP 2.2k 5% 1/10W
R276	1-216-049-91	s	METAL, CHIP 1k 5% 1/10W
R277	1-216-081-00	s	METAL, CHIP 22k 5% 1/10W
R278	1-216-025-91	s	METAL, CHIP 100 5% 1/10W
R279	1-216-017-91	s	METAL, CHIP 47 5% 1/10W
R280	1-216-657-11	s	METAL, CHIP 1.8k 0.5% 1/10W
R281	1-216-073-00	s	METAL, CHIP 10k 5% 1/10W
R301	1-216-065-00	s	METAL, CHIP 4.7k 5% 1/10W
R302	1-216-025-91	s	METAL, CHIP 100 5% 1/10W
R303	1-216-065-00	s	METAL, CHIP 4.7k 5% 1/10W
R304	1-216-049-91	s	METAL, CHIP 1k 5% 1/10W
R305	1-216-049-91	s	METAL, CHIP 1k 5% 1/10W

(IO-149 BOARD(For PAL); Suffix -11)

Ref. No. or Q'ty	Part No.	SP	Description
R306	1-216-033-00	s	METAL, CHIP 220 5% 1/10W
R307	1-216-057-00	s	METAL, CHIP 2.2k 5% 1/10W
R308	1-216-057-00	s	METAL, CHIP 2.2k 5% 1/10W
R309	1-216-049-91	s	METAL, CHIP 1k 5% 1/10W
R310	1-216-049-91	s	METAL, CHIP 1k 5% 1/10W
R311	1-216-659-11	s	METAL, CHIP 2.2k 0.5% 1/10W
R312	1-216-627-11	s	METAL, CHIP 100 0.5% 1/10W
R313	1-216-295-91	s	RES, CHIP 0
R314	1-216-661-11	s	METAL, CHIP 2.7k 0.5% 1/10W
R315	1-216-065-00	s	METAL, CHIP 4.7k 5% 1/10W
R316	1-216-025-91	s	METAL, CHIP 100 5% 1/10W
R317	1-216-647-11	s	METAL, CHIP 680 0.5% 1/10W
R318	1-216-017-91	s	METAL, CHIP 47 5% 1/10W
R319	1-216-657-11	s	METAL, CHIP 1.8k 0.5% 1/10W
R320	1-216-065-00	s	METAL, CHIP 4.7k 5% 1/10W
R321	1-216-025-91	s	METAL, CHIP 100 5% 1/10W
R322	1-216-643-11	s	METAL, CHIP 470 0.5% 1/10W
R323	1-216-653-11	s	METAL, CHIP 1.2k 0.5% 1/10W
R324	1-216-643-11	s	METAL, CHIP 470 0.5% 1/10W
R325	1-216-643-11	s	METAL, CHIP 470 0.5% 1/10W
R326	1-216-647-11	s	METAL, CHIP 680 0.5% 1/10W
R327	1-216-065-00	s	METAL, CHIP 4.7k 5% 1/10W
R328	1-216-639-11	s	METAL, CHIP 330 0.5% 1/10W
R329	1-216-049-91	s	METAL, CHIP 1k 5% 1/10W
R330	1-216-033-00	s	METAL, CHIP 220 5% 1/10W
R331	1-216-049-91	s	METAL, CHIP 1k 5% 1/10W
R332	1-216-049-91	s	METAL, CHIP 1k 5% 1/10W
R333	1-216-049-91	s	METAL, CHIP 1k 5% 1/10W
R336	1-216-061-00	s	METAL, CHIP 3.3k 5% 1/10W
R337	1-216-683-11	s	METAL, CHIP 22k 0.5% 1/10W
R338	1-216-667-11	s	METAL, CHIP 4.7k 0.5% 1/10W
R339	1-216-049-91	s	METAL, CHIP 1k 5% 1/10W
R340	1-216-643-11	s	METAL, CHIP 470 0.5% 1/10W
R341	1-216-643-11	s	METAL, CHIP 470 0.5% 1/10W
R342	1-216-651-11	s	METAL, CHIP 1k 0.5% 1/10W
R343	1-216-053-00	s	METAL, CHIP 1.5k 5% 1/10W
R344	1-216-025-91	s	METAL, CHIP 100 5% 1/10W
R345	1-216-643-11	s	METAL, CHIP 470 0.5% 1/10W
R346	1-216-077-00	s	METAL, CHIP 15k 5% 1/10W
R347	1-216-057-00	s	METAL, CHIP 2.2k 5% 1/10W
R348	1-216-655-11	s	METAL, CHIP 1.5k 0.5% 1/10W
R349	1-216-025-91	s	METAL, CHIP 100 5% 1/10W
R350	1-216-643-11	s	METAL, CHIP 470 0.5% 1/10W
R351	1-216-057-00	s	METAL, CHIP 2.2k 5% 1/10W
R352	1-216-634-11	s	METAL, CHIP 200 0.5% 1/10W
R353	1-216-664-11	s	METAL, CHIP 3.6k 0.5% 1/10W
R354	1-216-057-00	s	METAL, CHIP 2.2k 5% 1/10W
R355	1-216-045-00	s	METAL, CHIP 680 5% 1/10W
R356	1-216-083-00	s	METAL, CHIP 27k 5% 1/10W
R357	1-216-655-11	s	METAL, CHIP 1.5k 0.5% 1/10W
R358	1-216-671-11	s	METAL, CHIP 6.8k 0.5% 1/10W
R359	1-216-057-00	s	METAL, CHIP 2.2k 5% 1/10W
R360	1-216-025-91	s	METAL, CHIP 100 5% 1/10W
R361	1-216-651-11	s	METAL, CHIP 1k 0.5% 1/10W
R362	1-216-025-91	s	METAL, CHIP 100 5% 1/10W
R363	1-216-025-91	s	METAL, CHIP 100 5% 1/10W
R364	1-216-049-91	s	METAL, CHIP 1k 5% 1/10W
R365	1-216-025-91	s	METAL, CHIP 100 5% 1/10W
R366	1-216-651-11	s	METAL, CHIP 1k 0.5% 1/10W

(IO-149 BOARD(For PAL); Suffix -11)

Ref. No. or Q'ty	Part No.	SP	Description
R367	1-216-653-11	s	METAL, CHIP 1.2k 0.5% 1/10W
R368	1-216-049-91	s	METAL, CHIP 1k 5% 1/10W
R369	1-216-049-91	s	METAL, CHIP 1k 5% 1/10W
R370	1-216-651-11	s	METAL, CHIP 1k 0.5% 1/10W
R371	1-216-057-00	s	METAL, CHIP 2.2k 5% 1/10W
R372	1-216-049-91	s	METAL, CHIP 1k 5% 1/10W
R373	1-216-049-91	s	METAL, CHIP 1k 5% 1/10W
R374	1-216-653-11	s	METAL, CHIP 1.2k 0.5% 1/10W
R375	1-216-653-11	s	METAL, CHIP 1.2k 0.5% 1/10W
R376	1-216-049-91	s	METAL, CHIP 1k 5% 1/10W
R377	1-216-049-91	s	METAL, CHIP 1k 5% 1/10W
R378	1-216-065-00	s	METAL, CHIP 4.7k 5% 1/10W
R379	1-216-025-91	s	METAL, CHIP 100 5% 1/10W
R380	1-216-065-00	s	METAL, CHIP 4.7k 5% 1/10W
R381	1-216-025-91	s	METAL, CHIP 100 5% 1/10W
R382	1-216-053-00	s	METAL, CHIP 1.5k 5% 1/10W
R383	1-216-049-91	s	METAL, CHIP 1k 5% 1/10W
R384	1-216-049-91	s	METAL, CHIP 1k 5% 1/10W
R385	1-216-049-91	s	METAL, CHIP 1k 5% 1/10W
R386	1-216-049-91	s	METAL, CHIP 1k 5% 1/10W
R387	1-216-049-91	s	METAL, CHIP 1k 5% 1/10W
R388	1-216-049-91	s	METAL, CHIP 1k 5% 1/10W
R389	1-216-639-11	s	METAL, CHIP 330 0.5% 1/10W
R390	1-216-639-11	s	METAL, CHIP 330 0.5% 1/10W
R391	1-216-057-00	s	METAL, CHIP 2.2k 5% 1/10W
R392	1-216-041-00	s	METAL, CHIP 470 5% 1/10W
R393	1-216-057-00	s	METAL, CHIP 2.2k 5% 1/10W
R394	1-216-025-91	s	METAL, CHIP 100 5% 1/10W
R395	1-216-025-91	s	METAL, CHIP 100 5% 1/10W
R396	1-216-025-91	s	METAL, CHIP 100 5% 1/10W
R397	1-216-025-91	s	METAL, CHIP 100 5% 1/10W
R398	1-216-055-00	s	METAL, CHIP 1.8k 5% 1/10W
R399	1-216-065-00	s	METAL, CHIP 4.7k 5% 1/10W
R400	1-216-065-00	s	METAL, CHIP 4.7k 5% 1/10W
R401	1-216-065-00	s	METAL, CHIP 4.7k 5% 1/10W
R402	1-216-065-00	s	METAL, CHIP 4.7k 5% 1/10W
R403	1-216-669-11	s	METAL, CHIP 5.6k 0.5% 1/10W
R404	1-216-659-11	s	METAL, CHIP 2.2k 0.5% 1/10W
R405	1-216-113-00	s	METAL, CHIP 470k 5% 1/10W
R406	1-216-049-91	s	METAL, CHIP 1k 5% 1/10W
R407	1-216-049-91	s	METAL, CHIP 1k 5% 1/10W
R408	1-216-049-91	s	METAL, CHIP 1k 5% 1/10W
R409	1-216-057-00	s	METAL, CHIP 2.2k 5% 1/10W
R410	1-216-669-11	s	METAL, CHIP 5.6k 0.5% 1/10W
R411	1-216-659-11	s	METAL, CHIP 2.2k 0.5% 1/10W
R412	1-216-055-00	s	METAL, CHIP 1.8k 5% 1/10W
R413	1-216-057-00	s	METAL, CHIP 2.2k 5% 1/10W
R414	1-216-017-91	s	METAL, CHIP 47 5% 1/10W
R415	1-216-017-91	s	METAL, CHIP 47 5% 1/10W
R416	1-216-073-00	s	METAL, CHIP 10k 5% 1/10W
R417	1-216-643-11	s	METAL, CHIP 470 0.5% 1/10W
R418	1-216-643-11	s	METAL, CHIP 470 0.5% 1/10W
R419	1-216-653-11	s	METAL, CHIP 1.2k 0.5% 1/10W
R420	1-216-643-11	s	METAL, CHIP 470 0.5% 1/10W
R421	1-216-041-00	s	METAL, CHIP 470 5% 1/10W
R422	1-216-653-11	s	METAL, CHIP 1.2k 0.5% 1/10W
R423	1-216-643-11	s	METAL, CHIP 470 0.5% 1/10W
R424	1-216-643-11	s	METAL, CHIP 470 0.5% 1/10W
R425	1-216-663-11	s	METAL, CHIP 3.3k 0.5% 1/10W

(IO-149 BOARD(For PAL); Suffix -11)

Ref. No. or Q'ty	Part No.	SP	Description
R426	1-216-663-11	s	METAL, CHIP 3.3k 0.5% 1/10W
R427	1-216-053-00	s	METAL, CHIP 1.5k 5% 1/10W
R428	1-216-651-11	s	METAL, CHIP 1k 0.5% 1/10W
R429	1-216-639-11	s	METAL, CHIP 330 0.5% 1/10W
R430	1-216-651-11	s	METAL, CHIP 1k 0.5% 1/10W
R431	1-216-639-11	s	METAL, CHIP 330 0.5% 1/10W
R432	1-216-065-00	s	METAL, CHIP 4.7k 5% 1/10W
R433	1-216-065-00	s	METAL, CHIP 4.7k 5% 1/10W
R434	1-216-656-11	s	METAL, CHIP 1.6k 0.5% 1/10W
R435	1-216-657-11	s	METAL, CHIP 1.8k 0.5% 1/10W
R436	1-216-049-91	s	METAL, CHIP 1k 5% 1/10W
R437	1-216-081-00	s	METAL, CHIP 22k 5% 1/10W
R438	1-216-653-11	s	METAL, CHIP 1.2k 0.5% 1/10W
R439	1-216-667-11	s	METAL, CHIP 4.7k 0.5% 1/10W
R440	1-216-651-11	s	METAL, CHIP 1k 0.5% 1/10W
R441	1-216-624-11	s	METAL, CHIP 75 0.5% 1/10W
R442	1-216-624-11	s	METAL, CHIP 75 0.5% 1/10W
R443	1-216-624-11	s	METAL, CHIP 75 0.5% 1/10W
R444	1-216-646-11	s	METAL, CHIP 620 0.5% 1/10W
R445	1-216-045-00	s	METAL, CHIP 680 5% 1/10W
R446	1-216-041-00	s	METAL, CHIP 470 5% 1/10W
R447	1-216-656-11	s	METAL, CHIP 1.6k 0.5% 1/10W
R448	1-216-041-00	s	METAL, CHIP 470 5% 1/10W
R449	1-216-657-11	s	METAL, CHIP 1.8k 0.5% 1/10W
R450	1-216-624-11	s	METAL, CHIP 75 0.5% 1/10W
R451	1-216-097-91	s	METAL, CHIP 100k 5% 1/10W
R452	1-216-073-00	s	METAL, CHIP 10k 5% 1/10W
R453	1-216-081-00	s	METAL, CHIP 22k 5% 1/10W
R454	1-216-095-00	s	METAL, CHIP 82k 5% 1/10W
R455	1-216-073-00	s	METAL, CHIP 10k 5% 1/10W
R456	1-216-624-11	s	METAL, CHIP 75 0.5% 1/10W
R457	1-216-624-11	s	METAL, CHIP 75 0.5% 1/10W
R458	1-216-675-11	s	METAL, CHIP 10k 0.5% 1/10W
R459	1-216-624-11	s	METAL, CHIP 75 0.5% 1/10W
R501	1-216-089-91	s	METAL, CHIP 47k 5% 1/10W
R502	1-216-683-11	s	METAL, CHIP 22k 0.5% 1/10W
R503	1-216-655-11	s	METAL, CHIP 1.5k 0.5% 1/10W
R504	1-216-675-11	s	METAL, CHIP 10k 0.5% 1/10W
R505	1-216-675-11	s	METAL, CHIP 10k 0.5% 1/10W
R507	1-216-655-11	s	METAL, CHIP 1.5k 0.5% 1/10W
R508	1-216-073-00	s	METAL, CHIP 10k 5% 1/10W
R509	1-216-669-11	s	METAL, CHIP 5.6k 0.5% 1/10W
R510	1-216-675-11	s	METAL, CHIP 10k 0.5% 1/10W
R511	1-216-667-11	s	METAL, CHIP 4.7k 0.5% 1/10W
R513	1-216-677-11	s	METAL, CHIP 12k 0.5% 1/10W
R515	1-216-057-00	s	METAL, CHIP 2.2k 5% 1/10W
R516	1-216-691-11	s	METAL, CHIP 47k 0.5% 1/10W
R517	1-216-677-11	s	METAL, CHIP 12k 0.5% 1/10W
R518	1-216-679-11	s	METAL, CHIP 15k 0.5% 1/10W
R519	1-216-677-11	s	METAL, CHIP 12k 0.5% 1/10W *3)
	1-208-802-11	s	METAL, CHIP 6.8k 0.5% 1/10W *4)
R520	1-216-679-11	s	METAL, CHIP 15k 0.5% 1/10W
R521	1-216-089-91	s	METAL, CHIP 47k 5% 1/10W
R522	1-216-097-91	s	METAL, CHIP 100k 5% 1/10W
R523	1-216-089-91	s	METAL, CHIP 47k 5% 1/10W
R524	1-216-675-11	s	METAL, CHIP 10k 0.5% 1/10W
R525	1-216-651-11	s	METAL, CHIP 1k 0.5% 1/10W
R526	1-216-675-11	s	METAL, CHIP 10k 0.5% 1/10W

(IO-149 BOARD(For PAL); Suffix -11)

Ref. No. or Q'ty	Part No.	SP	Description
R527	1-216-665-11	s	METAL, CHIP 3.9k 0.5% 1/10W
R528	1-216-677-11	s	METAL, CHIP 12k 0.5% 1/10W
R529	1-216-049-91	s	METAL, CHIP 1k 5% 1/10W
R530	1-216-065-00	s	METAL, CHIP 4.7k 5% 1/10W
R531	1-216-049-91	s	METAL, CHIP 1k 5% 1/10W
R532	1-216-049-91	s	METAL, CHIP 1k 5% 1/10W
R533	1-216-677-11	s	METAL, CHIP 12k 0.5% 1/10W
R534	1-216-051-00	s	METAL, CHIP 1.2k 5% 1/10W
R535	1-216-675-11	s	METAL, CHIP 10k 0.5% 1/10W
R536	1-216-059-00	s	METAL, CHIP 2.7k 5% 1/10W
R537	1-216-643-11	s	METAL, CHIP 470 0.5% 1/10W
R538	1-216-679-11	s	METAL, CHIP 15k 0.5% 1/10W
R539	1-216-049-91	s	METAL, CHIP 1k 5% 1/10W
R540	1-216-057-00	s	METAL, CHIP 2.2k 5% 1/10W
R541	1-216-651-11	s	METAL, CHIP 1k 0.5% 1/10W
R542	1-216-057-00	s	METAL, CHIP 2.2k 5% 1/10W
R543	1-216-073-00	s	METAL, CHIP 10k 5% 1/10W
R544	1-216-651-11	s	METAL, CHIP 1k 0.5% 1/10W
R545	1-216-683-11	s	METAL, CHIP 22k 0.5% 1/10W
R546	1-216-057-00	s	METAL, CHIP 2.2k 5% 1/10W
R547	1-216-017-91	s	METAL, CHIP 47 5% 1/10W
R548	1-216-683-11	s	METAL, CHIP 22k 0.5% 1/10W
R549	1-216-666-11	s	METAL, CHIP 4.3k 0.5% 1/10W
R550	1-216-655-11	s	METAL, CHIP 1.5k 0.5% 1/10W
R551	1-216-097-91	s	METAL, CHIP 100k 5% 1/10W
R552	1-216-059-00	s	METAL, CHIP 2.7k 5% 1/10W
R553	1-216-671-11	s	METAL, CHIP 6.8k 0.5% 1/10W
R554	1-216-655-11	s	METAL, CHIP 1.5k 0.5% 1/10W
R555	1-216-059-00	s	METAL, CHIP 2.7k 5% 1/10W
R556	1-216-073-00	s	METAL, CHIP 10k 5% 1/10W
R557	1-216-683-11	s	METAL, CHIP 22k 0.5% 1/10W
R558	1-216-017-91	s	METAL, CHIP 47 5% 1/10W
R559	1-216-687-11	s	METAL, CHIP 33k 0.5% 1/10W
R560	1-216-679-11	s	METAL, CHIP 15k 0.5% 1/10W
R561	1-216-683-11	s	METAL, CHIP 22k 0.5% 1/10W
R562	1-216-069-00	s	METAL, CHIP 6.8k 5% 1/10W
R563	1-216-687-11	s	METAL, CHIP 33k 0.5% 1/10W
R564	1-216-687-11	s	METAL, CHIP 33k 0.5% 1/10W
R565	1-216-047-91	s	METAL, CHIP 820 5% 1/10W
R566	1-216-049-91	s	METAL, CHIP 1k 5% 1/10W
R567	1-216-691-11	s	METAL, CHIP 47k 0.5% 1/10W
R568	1-216-025-91	s	METAL, CHIP 100 5% 1/10W
R569	1-216-041-00	s	METAL, CHIP 470 5% 1/10W
R570	1-216-669-11	s	METAL, CHIP 5.6k 0.5% 1/10W
R571	1-216-081-00	s	METAL, CHIP 22k 5% 1/10W
R572	1-216-049-91	s	METAL, CHIP 1k 5% 1/10W
R573	1-216-059-00	s	METAL, CHIP 2.7k 5% 1/10W
R574	1-216-681-11	s	METAL, CHIP 18k 0.5% 1/10W
R575	1-216-041-00	s	METAL, CHIP 470 5% 1/10W
R576	1-216-624-11	s	METAL, CHIP 75 0.5% 1/10W
R577	1-216-687-11	s	METAL, CHIP 33k 0.5% 1/10W
R579	1-218-772-11	s	METAL, CHIP 680k 0.5% 1/10W
R580	1-216-017-91	s	METAL, CHIP 47 5% 1/10W
R581	1-216-025-91	s	METAL, CHIP 100 5% 1/10W
R582	1-216-061-00	s	METAL, CHIP 3.3k 5% 1/10W
R583	1-216-097-91	s	METAL, CHIP 100k 5% 1/10W
R584	1-216-017-91	s	METAL, CHIP 47 5% 1/10W
R585	1-216-049-91	s	METAL, CHIP 1k 5% 1/10W
R586	1-216-049-91	s	METAL, CHIP 1k 5% 1/10W

(IO-149 BOARD(For PAL); Suffix -11)

Ref. No. or Q'ty	Part No.	SP	Description
R587	1-216-049-91	s	METAL, CHIP 1k 5% 1/10W
R588	1-216-093-00	s	METAL, CHIP 68k 5% 1/10W
R589	1-216-049-91	s	METAL, CHIP 1k 5% 1/10W
R601	1-216-089-91	s	METAL, CHIP 47k 5% 1/10W
R603	1-216-295-91	s	RES, CHIP 0
R605	1-216-295-91	s	RES, CHIP 0
R606	1-216-073-00	s	METAL, CHIP 10k 5% 1/10W
R607	1-216-065-00	s	METAL, CHIP 4.7k 5% 1/10W
R608	1-216-017-91	s	METAL, CHIP 47 5% 1/10W
R609	1-216-295-91	s	RES, CHIP 0
R610	1-216-049-91	s	METAL, CHIP 1k 5% 1/10W
R612	1-216-085-00	s	METAL, CHIP 33k 5% 1/10W
R614	1-216-073-00	s	METAL, CHIP 10k 5% 1/10W
R615	1-216-065-00	s	METAL, CHIP 4.7k 5% 1/10W
R616	1-216-017-91	s	METAL, CHIP 47 5% 1/10W
R617	1-216-085-00	s	METAL, CHIP 33k 5% 1/10W
R618	1-216-085-00	s	METAL, CHIP 33k 5% 1/10W
R619	1-216-658-11	s	METAL, CHIP 2k 0.5% 1/10W
R620	1-216-051-00	s	METAL, CHIP 1.2k 5% 1/10W
R621	1-216-658-11	s	METAL, CHIP 2k 0.5% 1/10W
R622	1-216-051-00	s	METAL, CHIP 1.2k 5% 1/10W
R623	1-216-643-11	s	METAL, CHIP 470 0.5% 1/10W
R624	1-216-037-00	s	METAL, CHIP 330 5% 1/10W
R625	1-216-648-11	s	METAL, CHIP 750 0.5% 1/10W
R626	1-216-037-00	s	METAL, CHIP 330 5% 1/10W
R627	1-216-071-00	s	METAL, CHIP 8.2k 5% 1/10W
R628	1-216-686-11	s	METAL, CHIP 30k 0.5% 1/10W
R629	1-216-069-00	s	METAL, CHIP 6.8k 5% 1/10W
R630	1-216-686-11	s	METAL, CHIP 30k 0.5% 1/10W
R631	1-216-041-00	s	METAL, CHIP 470 5% 1/10W
R632	1-216-041-00	s	METAL, CHIP 470 5% 1/10W
R633	1-216-017-91	s	METAL, CHIP 47 5% 1/10W
R634	1-216-097-91	s	METAL, CHIP 100k 5% 1/10W
R635	1-216-667-11	s	METAL, CHIP 4.7k 0.5% 1/10W
R637	1-218-772-11	s	METAL, CHIP 680k 0.5% 1/10W
R638	1-216-659-11	s	METAL, CHIP 2.2k 0.5% 1/10W
R639	1-216-017-91	s	METAL, CHIP 47 5% 1/10W
R640	1-216-663-11	s	METAL, CHIP 3.3k 0.5% 1/10W
R641	1-216-650-91	s	METAL, CHIP 910 0.5% 1/10W
R642	1-216-665-11	s	METAL, CHIP 3.9k 0.5% 1/10W
R643	1-216-677-11	s	METAL, CHIP 12k 0.5% 1/10W
R644	1-216-635-11	s	METAL, CHIP 220 0.5% 1/10W
R645	1-216-635-11	s	METAL, CHIP 220 0.5% 1/10W
R646	1-216-049-91	s	METAL, CHIP 1k 5% 1/10W
R647	1-216-049-91	s	METAL, CHIP 1k 5% 1/10W
R648	1-216-037-00	s	METAL, CHIP 330 5% 1/10W
R649	1-216-037-00	s	METAL, CHIP 330 5% 1/10W
R650	1-216-049-91	s	METAL, CHIP 1k 5% 1/10W
R651	1-216-049-91	s	METAL, CHIP 1k 5% 1/10W
R652	1-216-025-91	s	METAL, CHIP 100 5% 1/10W
R653	1-216-025-91	s	METAL, CHIP 100 5% 1/10W
R654	1-216-025-91	s	METAL, CHIP 100 5% 1/10W
R655	1-216-049-91	s	METAL, CHIP 1k 5% 1/10W
R656	1-216-049-91	s	METAL, CHIP 1k 5% 1/10W
R657	1-216-025-91	s	METAL, CHIP 100 5% 1/10W
R658	1-216-025-91	s	METAL, CHIP 100 5% 1/10W
R659	1-216-049-91	s	METAL, CHIP 1k 5% 1/10W
R660	1-216-295-91	s	RES, CHIP 0
R661	1-216-295-91	s	RES, CHIP 0

(IO-149 BOARD(For PAL); Suffix -11)

Ref. No. or Q'ty	Part No.	SP	Description
RB101	1-239-999-11	s	RESISTOR BLOCK, CHIP 1kx4
RB102	1-239-998-11	s	RESISTOR BLOCK, CHIP 100x4
RB103	1-233-237-11	s	RESISTOR BLOCK, CHIP 100kx4
RB701	1-233-234-11	s	RESISTOR BLOCK, CHIP 2.2kx4
RV101	1-237-034-11	s	RES, ADJ METAL 2k
RV102	1-237-034-11	s	RES, ADJ METAL 2k
RV103	1-237-034-11	s	RES, ADJ METAL 2k
RV105	1-237-035-11	s	RES, ADJ METAL 5k
RV106	1-237-035-11	s	RES, ADJ METAL 5k
RV107	1-237-036-11	s	RES, ADJ METAL 10k
RV108	1-237-038-11	s	RES, ADJ METAL 50k
RV109	1-237-038-11	s	RES, ADJ METAL 50k
RV110	1-237-035-11	s	RES, ADJ METAL 5k
RV111	1-237-035-11	s	RES, ADJ METAL 5k
RV112	1-237-034-11	s	RES, ADJ METAL 2k
RV301	1-237-033-11	s	RES, ADJ METAL 1k
RV302	1-237-034-11	s	RES, ADJ METAL 2k
RV303	1-237-032-11	s	RES, ADJ METAL 500
RV304	1-237-033-11	s	RES, ADJ METAL 1k
RV305	1-237-035-11	s	RES, ADJ METAL 5k
RV306	1-237-033-11	s	RES, ADJ METAL 1k
RV307	1-237-033-11	s	RES, ADJ METAL 1k
RV308	1-237-032-11	s	RES, ADJ METAL 500
RV309	1-237-034-11	s	RES, ADJ METAL 2k
RV310	1-237-034-11	s	RES, ADJ METAL 2k
RV311	1-237-032-11	s	RES, ADJ METAL 500
RV312	1-237-035-11	s	RES, ADJ METAL 5k
RV313	1-237-035-11	s	RES, ADJ METAL 5k
RV314	1-237-032-11	s	RES, ADJ METAL 500
RV315	1-237-032-11	s	RES, ADJ METAL 500
RV316	1-237-033-11	s	RES, ADJ METAL 1k
RV317	1-237-033-11	s	RES, ADJ METAL 1k
RV318	1-237-030-11	s	RES, ADJ METAL 100
RV319	1-237-030-11	s	RES, ADJ METAL 100
RV501	1-237-035-11	s	RES, ADJ METAL 5k
RV502	1-237-036-11	s	RES, ADJ METAL 10k
RV503	1-237-037-11	s	RES, ADJ METAL 20k
RV504	1-237-036-11	s	RES, ADJ METAL 10k
RV505	1-237-034-11	s	RES, ADJ METAL 2k
RV506	1-237-033-11	s	RES, ADJ METAL 1k
RV601	1-237-035-11	s	RES, ADJ METAL 5k
S601	1-571-275-31	s	SWITCH, SLIDE
TH101	1-809-352-11	s	THERMISTOR, CHIP 1.5k
TP101	1-535-877-22	o	CHECKER, CHIP
TP102	1-535-877-22	o	CHECKER, CHIP
TP103	1-535-877-22	o	CHECKER, CHIP
TP301	1-535-877-22	o	CHECKER, CHIP
TP302	1-535-877-22	o	CHECKER, CHIP
TP303	1-535-877-22	o	CHECKER, CHIP
TP304	1-535-877-22	o	CHECKER, CHIP
TP305	1-535-877-22	o	CHECKER, CHIP
TP306	1-535-877-22	o	CHECKER, CHIP
TP307	1-535-877-22	o	CHECKER, CHIP
TP501	1-535-877-22	o	CHECKER, CHIP
TP502	1-535-877-22	o	CHECKER, CHIP
TP601	1-535-877-22	o	CHECKER, CHIP
TP602	1-535-877-22	o	CHECKER, CHIP

(IO-149 BOARD(For PAL); Suffix -11)

Ref. No. or Q'ty	Part No.	SP	Description
TP603	1-535-877-22	o	CHECKER, CHIP
TP604	1-535-877-22	o	CHECKER, CHIP
X101	1-767-260-11	s	CRYSTAL 13.50MHz
X102	1-767-260-11	s	CRYSTAL 13.50MHz
X103	1-767-260-11	s	CRYSTAL 13.50MHz
X601	1-760-626-11	s	CRYSTAL 27.00MHz
X602	1-760-457-11	s	CRYSTAL 17.7345MHz

KY-336B BOARD

Ref. No. or Q'ty	Part No.	SP	Description
1pc	A-8312-955-A	o	MOUNTED CIRCUIT BOARD, KY-336B
2pcs	7-682-648-09	s	SCREW +PS 3x8
C1	1-163-038-91	s	CERAMIC, CHIP 0.1uF 25V
C2	1-163-038-91	s	CERAMIC, CHIP 0.1uF 25V
C3	1-163-038-91	s	CERAMIC, CHIP 0.1uF 25V
C4	1-163-038-91	s	CERAMIC, CHIP 0.1uF 25V
C5	1-163-038-91	s	CERAMIC, CHIP 0.1uF 25V
C6	1-163-038-91	s	CERAMIC, CHIP 0.1uF 25V
C7	1-163-133-00	s	CERAMIC, CHIP 470pF 5% 50V
C16	1-163-038-91	s	CERAMIC, CHIP 0.1uF 25V
C17	1-104-664-11	s	ELECT 47uF 20% 25V
C18	1-163-275-11	s	CERAMIC, CHIP 0.001uF 5% 50V
C19	1-126-935-11	s	ELECT 470uF 20% 16V
C20	1-126-933-11	s	ELECT 100uF 20% 16V
C21	1-126-934-11	s	ELECT 220uF 20% 16V
C22	1-163-012-00	s	CERAMIC, CHIP 0.0018uF 10% 50V
C23	1-111-136-11	s	ELECT 47uF 20% 63V
C24	1-126-968-11	s	ELECT 100uF 20% 50V
C25	1-126-968-11	s	ELECT 100uF 20% 50V
C26	1-163-038-91	s	CERAMIC, CHIP 0.1uF 25V
C27	1-126-965-11	s	ELECT 22uF 20% 50V
C28	1-104-664-11	s	ELECT 47uF 20% 25V
C29	1-104-664-11	s	ELECT 47uF 20% 25V
C30	1-163-038-91	s	CERAMIC, CHIP 0.1uF 25V
C31	1-163-133-00	s	CERAMIC, CHIP 470pF 5% 50V
C32	1-163-038-91	s	CERAMIC, CHIP 0.1uF 25V
C33	1-163-038-91	s	CERAMIC, CHIP 0.1uF 25V
C34	1-163-133-00	s	CERAMIC, CHIP 470pF 5% 50V
C39	1-126-935-11	s	ELECT 470uF 20% 16V
C51	1-163-251-11	s	CERAMIC, CHIP 100pF 5% 50V
C52	1-163-251-11	s	CERAMIC, CHIP 100pF 5% 50V
C53	1-163-251-11	s	CERAMIC, CHIP 100pF 5% 50V
C54	1-163-251-11	s	CERAMIC, CHIP 100pF 5% 50V
C55	1-163-251-11	s	CERAMIC, CHIP 100pF 5% 50V
C56	1-163-251-11	s	CERAMIC, CHIP 100pF 5% 50V
C57	1-163-251-11	s	CERAMIC, CHIP 100pF 5% 50V
C58	1-163-251-11	s	CERAMIC, CHIP 100pF 5% 50V
C59	1-163-251-11	s	CERAMIC, CHIP 100pF 5% 50V
C60	1-163-251-11	s	CERAMIC, CHIP 100pF 5% 50V
C61	1-163-251-11	s	CERAMIC, CHIP 100pF 5% 50V
C62	1-163-251-11	s	CERAMIC, CHIP 100pF 5% 50V
C63	1-163-251-11	s	CERAMIC, CHIP 100pF 5% 50V
C64	1-163-251-11	s	CERAMIC, CHIP 100pF 5% 50V
C65	1-163-251-11	s	CERAMIC, CHIP 100pF 5% 50V
C66	1-163-251-11	s	CERAMIC, CHIP 100pF 5% 50V
C67	1-163-251-11	s	CERAMIC, CHIP 100pF 5% 50V
C68	1-163-251-11	s	CERAMIC, CHIP 100pF 5% 50V
C69	1-163-251-11	s	CERAMIC, CHIP 100pF 5% 50V
C70	1-163-251-11	s	CERAMIC, CHIP 100pF 5% 50V
C71	1-163-251-11	s	CERAMIC, CHIP 100pF 5% 50V
C72	1-163-251-11	s	CERAMIC, CHIP 100pF 5% 50V
C73	1-163-251-11	s	CERAMIC, CHIP 100pF 5% 50V
C74	1-163-251-11	s	CERAMIC, CHIP 100pF 5% 50V
C75	1-163-251-11	s	CERAMIC, CHIP 100pF 5% 50V
C76	1-163-251-11	s	CERAMIC, CHIP 100pF 5% 50V
C77	1-163-251-11	s	CERAMIC, CHIP 100pF 5% 50V
C78	1-163-251-11	s	CERAMIC, CHIP 100pF 5% 50V
C79	1-163-251-11	s	CERAMIC, CHIP 100pF 5% 50V

(KY-336B BOARD)

Ref. No. or Q'ty	Part No.	SP	Description
C80	1-163-251-11	s	CERAMIC, CHIP 100pF 5% 50V
C81	1-163-251-11	s	CERAMIC, CHIP 100pF 5% 50V
C82	1-163-251-11	s	CERAMIC, CHIP 100pF 5% 50V
C83	1-163-251-11	s	CERAMIC, CHIP 100pF 5% 50V
C84	1-163-251-11	s	CERAMIC, CHIP 100pF 5% 50V
C85	1-163-251-11	s	CERAMIC, CHIP 100pF 5% 50V
C86	1-163-251-11	s	CERAMIC, CHIP 100pF 5% 50V
C87	1-163-251-11	s	CERAMIC, CHIP 100pF 5% 50V
C88	1-163-251-11	s	CERAMIC, CHIP 100pF 5% 50V
C89	1-163-251-11	s	CERAMIC, CHIP 100pF 5% 50V
C90	1-163-251-11	s	CERAMIC, CHIP 100pF 5% 50V
C91	1-163-251-11	s	CERAMIC, CHIP 100pF 5% 50V
C92	1-163-251-11	s	CERAMIC, CHIP 100pF 5% 50V
C93	1-163-251-11	s	CERAMIC, CHIP 100pF 5% 50V
C94	1-163-251-11	s	CERAMIC, CHIP 100pF 5% 50V
C95	1-163-251-11	s	CERAMIC, CHIP 100pF 5% 50V
C96	1-163-251-11	s	CERAMIC, CHIP 100pF 5% 50V
C97	1-163-251-11	s	CERAMIC, CHIP 100pF 5% 50V
C98	1-163-251-11	s	CERAMIC, CHIP 100pF 5% 50V
C99	1-163-251-11	s	CERAMIC, CHIP 100pF 5% 50V
C100	1-163-251-11	s	CERAMIC, CHIP 100pF 5% 50V
C101	1-163-251-11	s	CERAMIC, CHIP 100pF 5% 50V
CN712	1-565-189-11	s	CONNECTOR, FPC 36P
CN713	1-506-468-11	s	CONNECTOR 3P, MALE
CN714	1-573-397-11	s	CONNECTOR, FPC 11P
D1	8-719-941-23	s	DIODE DA204U
D2	8-719-941-23	s	DIODE DA204U
D3	8-719-941-23	s	DIODE DA204U
D5	8-719-941-23	s	DIODE DA204U
D6	8-719-024-81	s	DIODE 1SS300-TE85L
D7	8-719-024-81	s	DIODE 1SS300-TE85L
D8	8-719-024-81	s	DIODE 1SS300-TE85L
D11	8-719-024-81	s	DIODE 1SS300-TE85L
D12	8-719-110-02	s	DIODE RD7.5ESB1
D13	8-719-108-24	s	DIODE 1SS223
D14	8-719-108-24	s	DIODE 1SS223
D15	8-719-158-61	s	DIODE RD16SB2
D16	8-719-901-83	s	DIODE 1SS83
D17	8-719-160-00	s	DIODE RD2.0FB1
D18	8-719-160-00	s	DIODE RD2.0FB1
D19	8-719-160-00	s	DIODE RD2.0FB1
D20	8-719-024-81	s	DIODE 1SS300-TE85L
D25	8-719-941-23	s	DIODE DA204U
D26	8-719-941-23	s	DIODE DA204U
D27	8-719-941-23	s	DIODE DA204U
D28	8-719-941-23	s	DIODE DA204U
D29	8-719-941-23	s	DIODE DA204U
D30	8-719-941-23	s	DIODE DA204U
D31	8-719-941-23	s	DIODE DA204U
E1	1-535-881-21	o	TERMINAL, TP
IC1	8-759-477-03	s	IC UPD78013FYCW-W07
IC2	8-759-350-99	s	IC M66004M6FP200D
IC3	8-759-186-44	s	IC TC74VHC125F
IC4	8-759-940-45	s	IC S-8054HN-CB
IC5	8-759-431-42	s	IC TD62504F-TEL
L1	1-410-385-11	s	INDUCTOR, CHIP 22uH
L2	1-410-381-11	s	INDUCTOR, CHIP 10uH

(KY-336B BOARD)

Ref. No. or Q'ty	Part No.	SP	Description
L4	1-412-533-21	s	INDUCTOR, CHIP 47uH
L5	1-412-031-11	s	INDUCTOR, CHIP 47uH
ND1	1-517-599-11	s	UNIT, FLD
ND2	1-517-598-11	s	UNIT, FLD
PS1	⚠ 1-532-637-00	s	LINK, IC 1.0A
PS2	⚠ 1-532-605-00	s	LINK, IC 0.4A
Q1	8-729-028-91	s	TRANSISTOR DTA144EUA-T106
Q2	8-729-028-91	s	TRANSISTOR DTA144EUA-T106
Q3	8-729-140-63	s	TRANSISTOR 2SA1611-M5M6
Q4	8-729-427-70	s	TRANSISTOR XP4401-TXE
Q5	8-729-230-49	s	TRANSISTOR 2SC2712-YG
Q6	8-729-822-55	s	TRANSISTOR 2SD1669R
Q7	8-729-106-68	s	TRANSISTOR 2SC1615A-GP
Q8	8-729-216-22	s	TRANSISTOR 2SA1162
Q9	8-729-019-87	s	TRANSISTOR 2SC3392-6-TB
Q10	8-729-216-22	s	TRANSISTOR 2SA1162
Q11	8-729-019-87	s	TRANSISTOR 2SC3392-6-TB
Q12	8-729-216-22	s	TRANSISTOR 2SA1162
Q13	8-729-019-87	s	TRANSISTOR 2SC3392-6-TB
Q14	8-729-216-22	s	TRANSISTOR 2SA1162
Q15	8-729-019-87	s	TRANSISTOR 2SC3392-6-TB
Q16	8-729-216-22	s	TRANSISTOR 2SA1162
Q17	8-729-019-87	s	TRANSISTOR 2SC3392-6-TB
Q18	8-729-216-22	s	TRANSISTOR 2SA1162
Q19	8-729-019-87	s	TRANSISTOR 2SC3392-6-TB
Q20	8-729-216-22	s	TRANSISTOR 2SA1162
Q21	8-729-019-87	s	TRANSISTOR 2SC3392-6-TB
Q22	8-729-216-22	s	TRANSISTOR 2SA1162
Q23	8-729-019-87	s	TRANSISTOR 2SC3392-6-TB
Q24	8-729-216-22	s	TRANSISTOR 2SA1162
Q25	8-729-019-87	s	TRANSISTOR 2SC3392-6-TB
Q26	8-729-216-22	s	TRANSISTOR 2SA1162
Q27	8-729-019-87	s	TRANSISTOR 2SC3392-6-TB
Q28	8-729-216-22	s	TRANSISTOR 2SA1162
Q29	8-729-019-87	s	TRANSISTOR 2SC3392-6-TB
Q30	8-729-216-22	s	TRANSISTOR 2SA1162
Q31	8-729-019-87	s	TRANSISTOR 2SC3392-6-TB
Q32	8-729-216-22	s	TRANSISTOR 2SA1162
Q33	8-729-019-87	s	TRANSISTOR 2SC3392-6-TB
Q34	8-729-216-22	s	TRANSISTOR 2SA1162
Q35	8-729-019-87	s	TRANSISTOR 2SC3392-6-TB
Q36	8-729-216-22	s	TRANSISTOR 2SA1162
Q37	8-729-019-87	s	TRANSISTOR 2SC3392-6-TB
Q38	8-729-216-22	s	TRANSISTOR 2SA1162
Q39	8-729-019-87	s	TRANSISTOR 2SC3392-6-TB
Q40	8-729-216-22	s	TRANSISTOR 2SA1162
Q41	8-729-019-87	s	TRANSISTOR 2SC3392-6-TB
Q42	8-729-216-22	s	TRANSISTOR 2SA1162
Q43	8-729-019-87	s	TRANSISTOR 2SC3392-6-TB
Q44	8-729-216-22	s	TRANSISTOR 2SA1162
Q45	8-729-019-87	s	TRANSISTOR 2SC3392-6-TB
Q46	8-729-216-22	s	TRANSISTOR 2SA1162
Q47	8-729-019-87	s	TRANSISTOR 2SC3392-6-TB
Q48	8-729-216-22	s	TRANSISTOR 2SA1162
Q49	8-729-019-87	s	TRANSISTOR 2SC3392-6-TB
Q50	8-729-216-22	s	TRANSISTOR 2SA1162
Q51	8-729-019-87	s	TRANSISTOR 2SC3392-6-TB

(KY-336B BOARD)

Ref. No. or Q'ty	Part No.	SP	Description
Q52	8-729-216-22	s	TRANSISTOR 2SA1162
Q53	8-729-019-87	s	TRANSISTOR 2SC3392-6-TB
Q54	8-729-216-22	s	TRANSISTOR 2SA1162
Q55	8-729-019-87	s	TRANSISTOR 2SC3392-6-TB
Q56	8-729-216-22	s	TRANSISTOR 2SA1162
Q57	8-729-019-87	s	TRANSISTOR 2SC3392-6-TB
Q58	8-729-216-22	s	TRANSISTOR 2SA1162
Q59	8-729-019-87	s	TRANSISTOR 2SC3392-6-TB
Q60	8-729-216-22	s	TRANSISTOR 2SA1162
Q61	8-729-019-87	s	TRANSISTOR 2SC3392-6-TB
Q62	8-729-216-22	s	TRANSISTOR 2SA1162
Q63	8-729-019-87	s	TRANSISTOR 2SC3392-6-TB
Q64	8-729-216-22	s	TRANSISTOR 2SA1162
Q65	8-729-019-87	s	TRANSISTOR 2SC3392-6-TB
Q66	8-729-216-22	s	TRANSISTOR 2SA1162
Q67	8-729-019-87	s	TRANSISTOR 2SC3392-6-TB
Q68	8-729-216-22	s	TRANSISTOR 2SA1162
Q69	8-729-019-87	s	TRANSISTOR 2SC3392-6-TB
Q70	8-729-216-22	s	TRANSISTOR 2SA1162
Q71	8-729-019-87	s	TRANSISTOR 2SC3392-6-TB
Q72	8-729-216-22	s	TRANSISTOR 2SA1162
Q73	8-729-019-87	s	TRANSISTOR 2SC3392-6-TB
Q74	8-729-216-22	s	TRANSISTOR 2SA1162
Q75	8-729-019-87	s	TRANSISTOR 2SC3392-6-TB
Q76	8-729-216-22	s	TRANSISTOR 2SA1162
Q77	8-729-019-87	s	TRANSISTOR 2SC3392-6-TB
Q78	8-729-216-22	s	TRANSISTOR 2SA1162
Q79	8-729-019-87	s	TRANSISTOR 2SC3392-6-TB
Q80	8-729-216-22	s	TRANSISTOR 2SA1162
Q81	8-729-019-87	s	TRANSISTOR 2SC3392-6-TB
Q82	8-729-216-22	s	TRANSISTOR 2SA1162
Q83	8-729-019-87	s	TRANSISTOR 2SC3392-6-TB
Q84	8-729-216-22	s	TRANSISTOR 2SA1162
Q85	8-729-019-87	s	TRANSISTOR 2SC3392-6-TB
Q86	8-729-216-22	s	TRANSISTOR 2SA1162
Q87	8-729-019-87	s	TRANSISTOR 2SC3392-6-TB
Q88	8-729-216-22	s	TRANSISTOR 2SA1162
Q89	8-729-019-87	s	TRANSISTOR 2SC3392-6-TB
Q90	8-729-216-22	s	TRANSISTOR 2SA1162
Q91	8-729-019-87	s	TRANSISTOR 2SC3392-6-TB
Q92	8-729-216-22	s	TRANSISTOR 2SA1162
Q93	8-729-019-87	s	TRANSISTOR 2SC3392-6-TB
Q94	8-729-216-22	s	TRANSISTOR 2SA1162
Q95	8-729-019-87	s	TRANSISTOR 2SC3392-6-TB
Q96	8-729-216-22	s	TRANSISTOR 2SA1162
Q97	8-729-019-87	s	TRANSISTOR 2SC3392-6-TB
Q98	8-729-216-22	s	TRANSISTOR 2SA1162
Q99	8-729-019-87	s	TRANSISTOR 2SC3392-6-TB
Q100	8-729-216-22	s	TRANSISTOR 2SA1162
Q101	8-729-019-87	s	TRANSISTOR 2SC3392-6-TB
Q102	8-729-216-22	s	TRANSISTOR 2SA1162
Q103	8-729-019-87	s	TRANSISTOR 2SC3392-6-TB
Q104	8-729-216-22	s	TRANSISTOR 2SA1162
Q105	8-729-019-87	s	TRANSISTOR 2SC3392-6-TB
Q106	8-729-216-22	s	TRANSISTOR 2SA1162
Q107	8-729-019-87	s	TRANSISTOR 2SC3392-6-TB
Q108	8-729-216-22	s	TRANSISTOR 2SA1162
Q109	8-729-230-49	s	TRANSISTOR 2SC2712-YG

(KY-336B BOARD)

Ref. No. or Q'ty	Part No.	SP	Description
R1	1-216-089-91	s	METAL, CHIP 47k 5% 1/10W
R2	1-216-049-91	s	METAL, CHIP 1k 5% 1/10W
R3	1-216-089-91	s	METAL, CHIP 47k 5% 1/10W
R4	1-216-025-91	s	METAL, CHIP 100 5% 1/10W
R5	1-216-025-91	s	METAL, CHIP 100 5% 1/10W
R6	1-216-025-91	s	METAL, CHIP 100 5% 1/10W
R7	1-216-025-91	s	METAL, CHIP 100 5% 1/10W
R10	1-216-089-91	s	METAL, CHIP 47k 5% 1/10W
R11	1-216-089-91	s	METAL, CHIP 47k 5% 1/10W
R12	1-216-049-91	s	METAL, CHIP 1k 5% 1/10W
R13	1-216-061-00	s	METAL, CHIP 3.3k 5% 1/10W
R14	1-216-061-00	s	METAL, CHIP 3.3k 5% 1/10W
R15	1-216-049-91	s	METAL, CHIP 1k 5% 1/10W
R16	1-216-049-91	s	METAL, CHIP 1k 5% 1/10W
R17	1-216-049-91	s	METAL, CHIP 1k 5% 1/10W
R18	1-216-025-91	s	METAL, CHIP 100 5% 1/10W
R19	1-216-025-91	s	METAL, CHIP 100 5% 1/10W
R20	1-216-061-00	s	METAL, CHIP 3.3k 5% 1/10W
R21	1-216-065-91	s	METAL, CHIP 4.7k 5% 1/10W
R22	1-216-304-11	s	METAL, CHIP 3.3 5% 1/10W
R23	1-216-053-00	s	METAL, CHIP 1.5k 5% 1/10W
R24	1-216-067-00	s	METAL, CHIP 5.6k 5% 1/10W
R25	1-216-057-00	s	METAL, CHIP 2.2k 5% 1/10W
R26	1-216-089-91	s	METAL, CHIP 47k 5% 1/10W
R27	1-216-089-91	s	METAL, CHIP 47k 5% 1/10W
R28	1-216-089-91	s	METAL, CHIP 47k 5% 1/10W
R29	1-216-089-91	s	METAL, CHIP 47k 5% 1/10W
R30	1-216-027-00	s	METAL, CHIP 120 5% 1/10W
R31	1-216-027-00	s	METAL, CHIP 120 5% 1/10W
R32	1-216-027-00	s	METAL, CHIP 120 5% 1/10W
R33	1-216-027-00	s	METAL, CHIP 120 5% 1/10W
R34	1-216-027-00	s	METAL, CHIP 120 5% 1/10W
R36	1-216-057-00	s	METAL, CHIP 2.2k 5% 1/10W
R37	1-216-089-91	s	METAL, CHIP 47k 5% 1/10W
R38	1-216-089-91	s	METAL, CHIP 47k 5% 1/10W
R39	1-216-089-91	s	METAL, CHIP 47k 5% 1/10W
R40	1-220-221-11	s	METAL, CHIP 100 5% 1/2W
R41	1-216-069-00	s	METAL, CHIP 6.8k 5% 1/10W
R42	1-216-025-91	s	METAL, CHIP 100 5% 1/10W
R43	1-216-025-91	s	METAL, CHIP 100 5% 1/10W
R44	1-216-053-00	s	METAL, CHIP 1.5k 5% 1/10W
R45	1-216-033-00	s	METAL, CHIP 220 5% 1/10W
R46	1-216-055-00	s	METAL, CHIP 1.8k 5% 1/10W
R47	1-216-055-00	s	METAL, CHIP 1.8k 5% 1/10W
R48	1-216-083-00	s	METAL, CHIP 27k 5% 1/10W
R49	1-216-083-00	s	METAL, CHIP 27k 5% 1/10W
R50	1-216-049-91	s	METAL, CHIP 1k 5% 1/10W
R51	1-216-049-91	s	METAL, CHIP 1k 5% 1/10W
R52	1-216-049-91	s	METAL, CHIP 1k 5% 1/10W
R53	1-216-089-91	s	METAL, CHIP 47k 5% 1/10W
R54	1-216-089-91	s	METAL, CHIP 47k 5% 1/10W
R55	1-216-089-91	s	METAL, CHIP 47k 5% 1/10W
R56	1-216-089-91	s	METAL, CHIP 47k 5% 1/10W
R60	1-216-025-91	s	METAL, CHIP 100 5% 1/10W
R61	1-216-025-91	s	METAL, CHIP 100 5% 1/10W
R62	1-216-025-91	s	METAL, CHIP 100 5% 1/10W
R63	1-216-025-91	s	METAL, CHIP 100 5% 1/10W
R64	1-216-025-91	s	METAL, CHIP 100 5% 1/10W
R65	1-216-025-91	s	METAL, CHIP 100 5% 1/10W

(KY-336B BOARD)

Ref. No. or Q'ty	Part No.	SP	Description
R66	1-216-025-91	s	METAL, CHIP 100 5% 1/10W
R67	1-216-025-91	s	METAL, CHIP 100 5% 1/10W
R68	1-216-025-91	s	METAL, CHIP 100 5% 1/10W
R69	1-216-025-91	s	METAL, CHIP 100 5% 1/10W
R70	1-216-025-91	s	METAL, CHIP 100 5% 1/10W
R71	1-216-025-91	s	METAL, CHIP 100 5% 1/10W
R72	1-216-025-91	s	METAL, CHIP 100 5% 1/10W
R73	1-216-025-91	s	METAL, CHIP 100 5% 1/10W
R74	1-216-025-91	s	METAL, CHIP 100 5% 1/10W
R75	1-216-025-91	s	METAL, CHIP 100 5% 1/10W
R76	1-216-025-91	s	METAL, CHIP 100 5% 1/10W
R77	1-216-025-91	s	METAL, CHIP 100 5% 1/10W
R78	1-216-025-91	s	METAL, CHIP 100 5% 1/10W
R79	1-216-025-91	s	METAL, CHIP 100 5% 1/10W
R80	1-216-025-91	s	METAL, CHIP 100 5% 1/10W
R81	1-216-025-91	s	METAL, CHIP 100 5% 1/10W
R82	1-216-025-91	s	METAL, CHIP 100 5% 1/10W
R83	1-216-025-91	s	METAL, CHIP 100 5% 1/10W
R84	1-216-025-91	s	METAL, CHIP 100 5% 1/10W
R85	1-216-025-91	s	METAL, CHIP 100 5% 1/10W
R86	1-216-025-91	s	METAL, CHIP 100 5% 1/10W
R87	1-216-025-91	s	METAL, CHIP 100 5% 1/10W
R88	1-216-025-91	s	METAL, CHIP 100 5% 1/10W
R89	1-216-025-91	s	METAL, CHIP 100 5% 1/10W
R90	1-216-025-91	s	METAL, CHIP 100 5% 1/10W
R91	1-216-025-91	s	METAL, CHIP 100 5% 1/10W
R92	1-216-025-91	s	METAL, CHIP 100 5% 1/10W
R93	1-216-025-91	s	METAL, CHIP 100 5% 1/10W
R94	1-216-025-91	s	METAL, CHIP 100 5% 1/10W
R95	1-216-025-91	s	METAL, CHIP 100 5% 1/10W
R96	1-216-025-91	s	METAL, CHIP 100 5% 1/10W
R97	1-216-025-91	s	METAL, CHIP 100 5% 1/10W
R98	1-216-025-91	s	METAL, CHIP 100 5% 1/10W
R99	1-216-025-91	s	METAL, CHIP 100 5% 1/10W
R100	1-216-025-91	s	METAL, CHIP 100 5% 1/10W
R101	1-216-025-91	s	METAL, CHIP 100 5% 1/10W
R102	1-216-025-91	s	METAL, CHIP 100 5% 1/10W
R103	1-216-025-91	s	METAL, CHIP 100 5% 1/10W
R104	1-216-025-91	s	METAL, CHIP 100 5% 1/10W
R105	1-216-025-91	s	METAL, CHIP 100 5% 1/10W
R106	1-216-025-91	s	METAL, CHIP 100 5% 1/10W
R107	1-216-025-91	s	METAL, CHIP 100 5% 1/10W
R108	1-216-025-91	s	METAL, CHIP 100 5% 1/10W
R109	1-216-025-91	s	METAL, CHIP 100 5% 1/10W
R110	1-216-025-91	s	METAL, CHIP 100 5% 1/10W
R111	1-216-089-91	s	METAL, CHIP 47k 5% 1/10W
R112	1-216-089-91	s	METAL, CHIP 47k 5% 1/10W
R113	1-216-089-91	s	METAL, CHIP 47k 5% 1/10W
R114	1-216-089-91	s	METAL, CHIP 47k 5% 1/10W
R115	1-216-089-91	s	METAL, CHIP 47k 5% 1/10W
R116	1-216-089-91	s	METAL, CHIP 47k 5% 1/10W
R117	1-216-089-91	s	METAL, CHIP 47k 5% 1/10W
R118	1-216-089-91	s	METAL, CHIP 47k 5% 1/10W
R119	1-216-089-91	s	METAL, CHIP 47k 5% 1/10W
R120	1-216-089-91	s	METAL, CHIP 47k 5% 1/10W
R121	1-216-089-91	s	METAL, CHIP 47k 5% 1/10W
R122	1-216-089-91	s	METAL, CHIP 47k 5% 1/10W
R123	1-216-089-91	s	METAL, CHIP 47k 5% 1/10W
R124	1-216-089-91	s	METAL, CHIP 47k 5% 1/10W

(KY-336B BOARD)

Ref. No. or Q'ty	Part No.	SP	Description
R125	1-216-089-91	s	METAL, CHIP 47k 5% 1/10W
S1	1-692-892-11	s	SWITCH, PUSH
S2	1-692-890-31	s	SWITCH, PUSH
S3	1-692-890-21	s	SWITCH, PUSH
S4	1-692-890-41	s	SWITCH, PUSH
S5	1-692-892-21	s	SWITCH, PUSH
S11	1-571-977-11	s	SWITCH, PUSH
S12	1-762-832-11	s	SWITCH, SLIDE
T1	1-429-856-11	s	TRANSFORMER, POWER
TP1	1-535-881-21	o	TERMINAL, TP
X1	1-579-175-11	s	RESONATOR, CERAMIC 10.00MHz

MB-713 BOARD

The parts marked * are different, depending on the product serial numbers, as shown below:
*1) Serial number; 10001 through 10620 (For DSR-60 J)
Serial number; 10001 through 10540 (For DSR-60 UC)
Serial number; 10001 through 10800 (For DSR-60P CE)

Ref. No. or Q'ty	Part No.	SP	Description
1pc	A-8312-898-A	o	MOUNTED CIRCUIT BOARD, MB-713
C1	1-163-235-11	s	CERAMIC, CHIP 22pF 5% 50V
C2	1-104-664-11	s	ELECT 47uF 20% 25V
C3	1-104-664-11	s	ELECT 47uF 20% 25V
C4	1-104-664-11	s	ELECT 47uF 20% 25V
C5	1-163-235-11	s	CERAMIC, CHIP 22pF 5% 50V
C6	1-104-664-11	s	ELECT 47uF 20% 25V
C7	1-163-133-00	s	CERAMIC, CHIP 470pF 5% 50V
C8	1-104-664-11	s	ELECT 47uF 20% 25V
C101	1-164-004-11	s	CERAMIC, CHIP 0.1uF 10% 25V
C102	1-126-933-11	s	ELECT 100uF 20% 16V
C103	1-164-004-11	s	CERAMIC, CHIP 0.1uF 10% 25V
C104	1-126-933-11	s	ELECT 100uF 20% 16V
C105	1-164-004-11	s	CERAMIC, CHIP 0.1uF 10% 25V
C106	1-104-665-11	s	ELECT 100uF 20% 25V
C107	1-164-004-11	s	CERAMIC, CHIP 0.1uF 10% 25V
C108	1-104-665-11	s	ELECT 100uF 20% 25V
C109	1-164-004-11	s	CERAMIC, CHIP 0.1uF 10% 25V
C110	1-126-934-11	s	ELECT 220uF 20% 16V
C111	1-164-004-11	s	CERAMIC, CHIP 0.1uF 10% 25V
C112	1-164-004-11	s	CERAMIC, CHIP 0.1uF 10% 25V
C113	1-126-934-11	s	ELECT 220uF 20% 16V
C114	1-164-004-11	s	CERAMIC, CHIP 0.1uF 10% 25V
C115	1-164-004-11	s	CERAMIC, CHIP 0.1uF 10% 25V
C116	1-126-933-11	s	ELECT 100uF 20% 16V
C117	1-104-664-11	s	ELECT 47uF 20% 25V
C118	1-104-664-11	s	ELECT 47uF 20% 25V
CN503	1-565-189-11	s	CONNECTOR, FPC 36P
CN505	1-562-708-11	o	CONNECTOR, FPC 13P, FEMALE
CN506	1-565-189-11	s	CONNECTOR, FPC 36P
CN601	1-766-792-11	o	CONNECTOR, BB 12P, FEMALE
CN602	1-766-792-11	o	CONNECTOR, BB 12P, FEMALE
CN603	1-766-792-11	o	CONNECTOR, BB 12P, FEMALE
CN604	1-766-792-11	o	CONNECTOR, BB 12P, FEMALE
CN605	1-766-792-11	o	CONNECTOR, BB 12P, FEMALE
CN606	1-766-792-11	o	CONNECTOR, BB 12P, FEMALE
CN607	1-764-259-11	s	CONNECTOR, D-SUB 15P, FEMALE
CN608	1-573-566-11	s	CONNECTOR, D-SUB 9P, FEMALE
CN609	1-564-002-11	s	CONNECTOR 3P, MALE
CN701	1-506-477-11	s	CONNECTOR, 12P, MALE
CN702	1-565-189-11	s	CONNECTOR, FPC 36P
CN703	1-766-791-11	o	CONNECTOR, BB 10P, FEMALE
CN801	1-563-370-11	o	CONNECTOR, FPC 14P
CN903	1-691-757-11	o	CONNECTOR, BB 8P, MALE
CN904	1-766-176-11	o	CONNECTOR, BB 6P, MALE
FL1	1-233-314-11	s	FILTER, NOISE, CHIP
FL2	1-233-314-11	s	FILTER, NOISE, CHIP
FL3	1-233-314-11	s	FILTER, NOISE, CHIP
FL4	1-233-314-11	s	FILTER, NOISE, CHIP
FL5	1-233-314-11	s	FILTER, NOISE, CHIP
FL6	1-233-314-11	s	FILTER, NOISE, CHIP

(MB-713 BOARD)

Ref. No. or Q'ty	Part No.	SP	Description
FL7	1-233-314-11	s	FILTER, NOISE, CHIP
FL8	1-233-314-11	s	FILTER, NOISE, CHIP
IC1	8-759-173-37	s	IC L79M09T-TL
IC2	8-759-172-41	s	IC L78M09T-TL
IC3	8-759-745-64	s	IC NJM4560M
Q1	8-729-202-38	s	TRANSISTOR 2SC3326N
Q2	8-729-202-38	s	TRANSISTOR 2SC3326N
Q3	8-729-202-38	s	TRANSISTOR 2SC3326N
Q4	8-729-027-38	s	TRANSISTOR DTA144EKA-T146
Q5	8-729-027-38	s	TRANSISTOR DTA144EKA-T146
R1	1-216-073-00	s	METAL, CHIP 10k 5% 1/10W
R2	1-216-071-00	s	METAL, CHIP 8.2k 5% 1/10W
R3	1-216-017-91	s	METAL, CHIP 47 5% 1/10W
R4	1-216-049-91	s	METAL, CHIP 1k 5% 1/10W
R5	1-216-073-00	s	METAL, CHIP 10k 5% 1/10W
R6	1-216-073-00	s	METAL, CHIP 10k 5% 1/10W
R7	1-216-073-00	s	METAL, CHIP 10k 5% 1/10W
R8	1-216-071-00	s	METAL, CHIP 8.2k 5% 1/10W
R9	1-216-017-91	s	METAL, CHIP 47 5% 1/10W
R10	1-216-049-91	s	METAL, CHIP 1k 5% 1/10W
R11	1-216-073-00	s	METAL, CHIP 10k 5% 1/10W *1)
R12	1-216-073-00	s	METAL, CHIP 10k 5% 1/10W
R13	1-216-073-00	s	METAL, CHIP 10k 5% 1/10W
R14	1-216-073-00	s	METAL, CHIP 10k 5% 1/10W
R16	1-216-073-00	s	METAL, CHIP 10k 5% 1/10W
R17	1-216-073-00	s	METAL, CHIP 10k 5% 1/10W

MS-43 BOARD

Ref. No. or Q'ty	Part No.	SP	Description
1pc	A-8312-024-A	o	MOUNTED CIRCUIT BOARD, MS-43
C1	1-163-038-91	s	CERAMIC, CHIP 0.1uF 25V
C2	1-163-038-91	s	CERAMIC, CHIP 0.1uF 25V
C3	1-163-038-91	s	CERAMIC, CHIP 0.1uF 25V
C9	1-163-133-00	s	CERAMIC, CHIP 470pF 5% 50V
C10	1-163-133-00	s	CERAMIC, CHIP 470pF 5% 50V
C11	1-163-038-91	s	CERAMIC, CHIP 0.1uF 25V
C12	1-126-960-11	s	ELECT 1uF 20% 50V
C13	1-163-021-91	s	CERAMIC, CHIP 0.01uF 10% 50V
C14	1-163-021-91	s	CERAMIC, CHIP 0.01uF 10% 50V
C15	1-163-275-11	s	CERAMIC, CHIP 0.001uF 5% 50V
C16	1-163-275-11	s	CERAMIC, CHIP 0.001uF 5% 50V
C101	1-126-396-11	s	ELECT, CHIP 47uF 20% 16V
C102	1-163-038-91	s	CERAMIC, CHIP 0.1uF 25V
C103	1-163-275-11	s	CERAMIC, CHIP 0.001uF 5% 50V
C104	1-163-038-91	s	CERAMIC, CHIP 0.1uF 25V
C105	1-163-038-91	s	CERAMIC, CHIP 0.1uF 25V
C106	1-163-275-11	s	CERAMIC, CHIP 0.001uF 5% 50V
C107	1-163-021-91	s	CERAMIC, CHIP 0.01uF 10% 50V
C108	1-163-275-11	s	CERAMIC, CHIP 0.001uF 5% 50V
C109	1-115-340-11	s	CERAMIC, CHIP 0.22uF 10% 25V
C111	1-115-340-11	s	CERAMIC, CHIP 0.22uF 10% 25V
C112	1-163-021-91	s	CERAMIC, CHIP 0.01uF 10% 50V
C113	1-126-403-11	s	ELECT, CHIP 3.3uF 20% 50V
C114	1-115-340-11	s	CERAMIC, CHIP 0.22uF 10% 25V
C115	1-126-396-11	s	ELECT, CHIP 47uF 20% 16V
C116	1-163-038-91	s	CERAMIC, CHIP 0.1uF 25V
C117	1-163-038-91	s	CERAMIC, CHIP 0.1uF 25V
C118	1-164-505-11	s	CERAMIC, CHIP 2.2uF 16V
C201	1-163-038-91	s	CERAMIC, CHIP 0.1uF 25V
C202	1-163-037-11	s	CERAMIC, CHIP 0.022uF 10% 25V
C203	1-163-038-91	s	CERAMIC, CHIP 0.1uF 25V
C204	1-163-038-91	s	CERAMIC, CHIP 0.1uF 25V
C205	1-163-038-91	s	CERAMIC, CHIP 0.1uF 25V
C206	1-163-038-91	s	CERAMIC, CHIP 0.1uF 25V
C207	1-163-038-91	s	CERAMIC, CHIP 0.1uF 25V
C208	1-126-396-11	s	ELECT, CHIP 47uF 20% 16V
C209	1-163-038-91	s	CERAMIC, CHIP 0.1uF 25V
C210	1-163-038-91	s	CERAMIC, CHIP 0.1uF 25V
C211	1-163-038-91	s	CERAMIC, CHIP 0.1uF 25V
C212	1-163-251-11	s	CERAMIC, CHIP 100pF 5% 50V
C213	1-163-251-11	s	CERAMIC, CHIP 100pF 5% 50V
CN201	1-764-129-11	s	CONNECTOR, FPC 15P
CN202	1-764-129-11	s	CONNECTOR, FPC 15P
CN203	1-565-189-11	s	CONNECTOR, FPC 36P
CN204	1-563-140-11	s	CONNECTOR 9P, FEMALE
CN205	1-778-663-11	o	CONNECTOR, BB 6P, FEMALE
CN206	1-565-189-11	s	CONNECTOR, FPC 36P
CN207	1-766-716-11	o	CONNECTOR, BB 3P, MALE
CN208	1-691-395-11	s	CONNECTOR, FPC 6P
CN209	1-563-140-11	s	CONNECTOR 9P, FEMALE
CN210	1-506-467-11	s	CONNECTOR 2P, MALE
CN211	1-564-004-11	o	CONNECTOR 5P, MALE
CN212	1-766-723-11	s	CONNECTOR, BB 3P, FEMALE
CN221	1-566-767-11	s	CONNECTOR 12P, MALE
D1	8-719-938-07	s	DIODE GL480
D2	8-719-938-07	s	DIODE GL480

(MS-43 BOARD)

Ref. No. or Q'ty	Part No.	SP	Description
D101	8-719-800-76	s	DIODE 1SS226
IC1	8-759-469-25	s	IC AK6440AF-E2
IC2	8-759-700-07	s	IC NJM2903M
IC101	8-759-288-80	s	IC TA8424F(TP2)
IC102	8-759-106-02	s	IC UPC4570G2
IC103	8-759-106-02	s	IC UPC4570G2
IC104	8-759-700-07	s	IC NJM2903M
IC201	8-759-106-02	s	IC UPC4570G2
IC202	8-759-399-64	s	IC LB1857M-TE-L
Q1	8-729-903-81	s	PHOTO TRANSISTOR PT480
Q2	8-729-903-81	s	PHOTO TRANSISTOR PT480
R1	1-216-628-11	s	METAL, CHIP 110 0.5% 1/10W
R3	1-216-031-00	s	METAL, CHIP 180 5% 1/10W
R4	1-216-628-11	s	METAL, CHIP 110 0.5% 1/10W
R5	1-216-089-91	s	METAL, CHIP 47k 5% 1/10W
R6	1-216-089-91	s	METAL, CHIP 47k 5% 1/10W
R7	1-216-089-91	s	METAL, CHIP 47k 5% 1/10W
R8	1-216-089-91	s	METAL, CHIP 47k 5% 1/10W
R10	1-216-295-91	s	RES, CHIP 0
R11	1-216-295-91	s	RES, CHIP 0
R14	1-216-065-91	s	METAL, CHIP 4.7k 5% 1/10W
R15	1-216-065-91	s	METAL, CHIP 4.7k 5% 1/10W
R16	1-216-121-91	s	METAL, CHIP 1M 5% 1/10W
R17	1-216-121-91	s	METAL, CHIP 1M 5% 1/10W
R18	1-216-073-00	s	METAL, CHIP 10k 5% 1/10W
R19	1-216-073-00	s	METAL, CHIP 10k 5% 1/10W
R20	1-216-065-91	s	METAL, CHIP 4.7k 5% 1/10W
R21	1-216-035-00	s	METAL, CHIP 270 5% 1/10W
R22	1-216-065-91	s	METAL, CHIP 4.7k 5% 1/10W
R23	1-216-097-91	s	METAL, CHIP 100k 5% 1/10W
R24	1-216-097-91	s	METAL, CHIP 100k 5% 1/10W
R25	1-216-672-11	s	METAL, CHIP 7.5k 0.5% 1/10W
R26	1-216-670-11	s	METAL, CHIP 6.2k 0.5% 1/10W
R27	1-216-675-11	s	METAL, CHIP 10k 0.5% 1/10W
R101	1-216-111-00	s	METAL, CHIP 390k 5% 1/10W
R102	1-216-097-91	s	METAL, CHIP 100k 5% 1/10W
R103	1-216-295-91	s	RES, CHIP 0
R104	1-216-109-00	s	METAL, CHIP 330k 5% 1/10W
R105	1-220-230-11	s	METAL, CHIP 2.2 10% 1/4W
R106	1-220-230-11	s	METAL, CHIP 2.2 10% 1/4W
R107	1-220-230-11	s	METAL, CHIP 2.2 10% 1/4W
R108	1-220-230-11	s	METAL, CHIP 2.2 10% 1/4W
R109	1-216-089-91	s	METAL, CHIP 47k 5% 1/10W
R110	1-220-231-11	s	METAL, CHIP 2.7 10% 1/4W
R111	1-220-230-11	s	METAL, CHIP 2.2 10% 1/4W
R113	1-216-031-00	s	METAL, CHIP 180 5% 1/10W
R114	1-216-073-00	s	METAL, CHIP 10k 5% 1/10W
R115	1-216-049-91	s	METAL, CHIP 1k 5% 1/10W
R116	1-220-231-11	s	METAL, CHIP 2.7 10% 1/4W
R117	1-216-089-91	s	METAL, CHIP 47k 5% 1/10W
R119	1-216-073-00	s	METAL, CHIP 10k 5% 1/10W
R120	1-220-231-11	s	METAL, CHIP 2.7 10% 1/4W
R121	1-216-027-00	s	METAL, CHIP 120 5% 1/10W
R123	1-216-025-91	s	METAL, CHIP 100 5% 1/10W
R124	1-216-025-91	s	METAL, CHIP 100 5% 1/10W
R125	1-216-097-91	s	METAL, CHIP 100k 5% 1/10W
R126	1-216-101-00	s	METAL, CHIP 150k 5% 1/10W

(MS-43 BOARD)

Ref. No. or Q'ty	Part No.	SP	Description
R127	1-216-089-91	s	METAL, CHIP 47k 5% 1/10W
R128	1-216-089-91	s	METAL, CHIP 47k 5% 1/10W
R129	1-216-065-91	s	METAL, CHIP 4.7k 5% 1/10W
R130	1-216-113-00	s	METAL, CHIP 470k 5% 1/10W
R131	1-216-097-91	s	METAL, CHIP 100k 5% 1/10W
R201	1-216-089-91	s	METAL, CHIP 47k 5% 1/10W
R202	1-216-691-11	s	METAL, CHIP 47k 0.5% 1/10W
R203	1-216-691-11	s	METAL, CHIP 47k 0.5% 1/10W
R204	1-216-675-11	s	METAL, CHIP 10k 0.5% 1/10W
R205	1-216-675-11	s	METAL, CHIP 10k 0.5% 1/10W
R206	1-216-073-00	s	METAL, CHIP 10k 5% 1/10W
R207	1-218-760-11	s	METAL, CHIP 220k 0.5% 1/10W
R208	1-218-760-11	s	METAL, CHIP 220k 0.5% 1/10W
R209	1-216-085-00	s	METAL, CHIP 33k 5% 1/10W
R210	1-216-073-00	s	METAL, CHIP 10k 5% 1/10W
R211	1-216-308-00	s	METAL, CHIP 4.7 5% 1/10W
R212	1-216-308-00	s	METAL, CHIP 4.7 5% 1/10W
R213	1-216-308-00	s	METAL, CHIP 4.7 5% 1/10W
R214	1-216-031-00	s	METAL, CHIP 180 5% 1/10W
TH1	1-809-357-21	s	THERMISTOR, CHIP 10k

PD-82 BOARD

The DV-17/A board has the PD-82 board, depending on the product serial numbers, as shown below:
Serial number; 10001 through 10620 (For DSR-60 J)
Serial number; 10001 through 10540 (For DSR-60 UC)
Serial number; 10001 through 10800 (For DSR-60P CE)

Ref. No. or Q'ty	Part No.	SP	Description
C1	1-126-394-11	s	ELECT, CHIP 10uF 20% 16V
C2	1-126-394-11	s	ELECT, CHIP 10uF 20% 16V
C3	1-163-038-91	s	CERAMIC, CHIP 0.1uF 25V
C4	1-163-038-91	s	CERAMIC, CHIP 0.1uF 25V
C5	1-163-038-91	s	CERAMIC, CHIP 0.1uF 25V
C6	1-163-038-91	s	CERAMIC, CHIP 0.1uF 25V
C7	1-163-038-91	s	CERAMIC, CHIP 0.1uF 25V
C8	1-163-038-91	s	CERAMIC, CHIP 0.1uF 25V
C9	1-163-038-91	s	CERAMIC, CHIP 0.1uF 25V
C10	1-163-038-91	s	CERAMIC, CHIP 0.1uF 25V
C11	1-163-038-91	s	CERAMIC, CHIP 0.1uF 25V
C12	1-163-038-91	s	CERAMIC, CHIP 0.1uF 25V
C13	1-163-038-91	s	CERAMIC, CHIP 0.1uF 25V
C14	1-163-038-91	s	CERAMIC, CHIP 0.1uF 25V
C15	1-163-038-91	s	CERAMIC, CHIP 0.1uF 25V
C16	1-163-038-91	s	CERAMIC, CHIP 0.1uF 25V
C17	1-163-038-91	s	CERAMIC, CHIP 0.1uF 25V
CN1	1-774-391-11	o	CONNECTOR, BB 60P, MALE
IC1	8-759-079-49	s	IC TC74VHC04FS(EL)
IC2	8-759-079-61	s	IC TC74VHC74FS(EL)
IC3	8-759-079-61	s	IC TC74VHC74FS(EL)
IC4	8-759-079-61	s	IC TC74VHC74FS(EL)
IC5	8-759-079-52	s	IC TC74VHC08FS(EL)
IC6	8-759-196-93	s	IC TC7SH00FU-TE85R
IC7	8-759-196-97	s	IC TC7SH32FU-TE85R
IC8	8-759-464-80	o	IC EPM7064LC-JOG
L1	1-410-381-11	s	INDUCTOR, CHIP 10uH
L2	1-410-381-11	s	INDUCTOR, CHIP 10uH
R2	1-216-295-91	s	RES, CHIP 0
R3	1-216-295-91	s	RES, CHIP 0
R4	1-216-295-91	s	RES, CHIP 0
R5	1-216-295-91	s	RES, CHIP 0
R2	1-216-295-91	s	RES, CHIP 0
R3	1-216-295-91	s	RES, CHIP 0
R4	1-216-295-91	s	RES, CHIP 0
R5	1-216-295-91	s	RES, CHIP 0
R6	1-216-295-91	s	RES, CHIP 0
R7	1-216-295-91	s	RES, CHIP 0
R8	1-216-295-91	s	RES, CHIP 0
R9	1-216-295-91	s	RES, CHIP 0
R10	1-216-295-91	s	RES, CHIP 0
R11	1-216-295-91	s	RES, CHIP 0
R12	1-216-295-91	s	RES, CHIP 0
R13	1-216-089-91	s	METAL, CHIP 47k 5% 1/10W
R14	1-216-295-91	s	RES, CHIP 0

PRE-39 BOARD

Ref. No. or Q'ty	Part No.	SP	Description
1pc	A-8312-950-A	s	MOUNTED CIRCUIT BOARD, PRE-39
C201	1-163-038-91	s	CERAMIC, CHIP 0.1uF 25V
C202	1-104-851-11	s	TANTALUM, CHIP 10uF 20% 10V
C203	1-163-038-91	s	CERAMIC, CHIP 0.1uF 25V
C204	1-163-038-91	s	CERAMIC, CHIP 0.1uF 25V
C205	1-104-851-11	s	TANTALUM, CHIP 10uF 20% 10V
C206	1-163-038-91	s	CERAMIC, CHIP 0.1uF 25V
C207	1-163-235-11	s	CERAMIC, CHIP 22pF 5% 50V
C208	1-163-021-91	s	CERAMIC, CHIP 0.01uF 10% 50V
C209	1-163-235-11	s	CERAMIC, CHIP 22pF 5% 50V
C210	1-163-038-91	s	CERAMIC, CHIP 0.1uF 25V
C211	1-163-038-91	s	CERAMIC, CHIP 0.1uF 25V
CN201	1-563-370-11	o	CONNECTOR, FPC 14P
CN202	1-770-324-11	o	CONNECTOR, FPC 8P
IC201	8-752-067-87	s	IC CXA1760Q
L201	1-414-398-11	s	INDUCTOR, CHIP 10uH
L202	1-414-398-11	s	INDUCTOR, CHIP 10uH
PS1	⚠ 1-576-123-21	s	LINK, IC, CHIP 0.8A
PS2	⚠ 1-576-123-21	s	LINK, IC, CHIP 0.8A
R201	1-216-073-00	s	METAL, CHIP 10k 5% 1/10W
R203	1-216-658-11	s	METAL, CHIP 2k 0.5% 1/10W
R207	1-216-075-00	s	METAL, CHIP 12k 5% 1/10W
R210	1-216-075-00	s	METAL, CHIP 12k 5% 1/10W
R211	1-216-658-11	s	METAL, CHIP 2k 0.5% 1/10W
R214	1-216-073-00	s	METAL, CHIP 10k 5% 1/10W

PTC-84 BOARD

Ref. No. or Q'ty	Part No.	SP	Description
1pc	1-662-908-11	o	PRINTED CIRCUIT BOARD, PTC-84
CN220	1-566-767-11	s	CONNECTOR 12P, MALE
CN222	1-564-002-11	s	CONNECTOR 3P, MALE
CN223	1-506-468-11	s	CONNECTOR 3P, MALE
CN224	1-506-467-11	s	CONNECTOR 2P, MALE
PH1	8-719-991-24	s	PHOTO-INTERRUPTER GP1S23
PH2	8-719-991-24	s	PHOTO-INTERRUPTER GP1S23

PTC-85 BOARD

Ref. No. or Q'ty	Part No.	SP	Description
1pc	1-662-909-11	o	PRINTED CIRCUIT BOARD, PTC-85
CN26	1-766-716-11	o	CONNECTOR, BB 3P, MALE
Q1	8-729-926-31	s	PHOTO TRANSISTOR PT483F1S

PTC-86 BOARD

Ref. No. or Q'ty	Part No.	SP	Description
1pc	1-662-910-11	o	PRINTED CIRCUIT BOARD, PTC-86
CN24	1-565-876-11	o	CONNECTOR 4P, MALE
CN25	1-778-662-11	o	CONNECTOR, BB 6P, MALE
Q1	8-729-926-31	s	PHOTO TRANSISTOR PT483F1S

PTC-87 BOARD

Ref. No. or Q'ty	Part No.	SP	Description
1pc	1-662-911-11	o	PRINTED CIRCUIT BOARD, PTC-87
CN23	1-766-723-11	s	CONNECTOR, BB 3P, FEMALE
D1	8-719-057-82	s	LED TLN115A, INFRARED

PTC-88 BOARD

Ref. No. or Q'ty	Part No.	SP	Description
1pc	1-662-912-11	o	PRINTED CIRCUIT BOARD, PTC-88
CN21	1-506-484-11	s	CONNECTOR 5P, MALE
CN22	1-506-481-11	s	CONNECTOR 2P, MALE
PH1	8-719-939-05	s	PHOTO-INTERRUPTER GP-1S54

RM-159 BOARD

Ref. No. or Q'ty	Part No.	SP	Description
1pc	1-662-916-11	o	PRINTED CIRCUIT BOARD, RM-159
CN11	1-778-666-11	o	CONNECTOR, FPC 9P
CN12	1-565-876-11	o	CONNECTOR 4P, MALE
CN13	1-564-013-11	o	CONNECTOR 3P, MALE
CN14	1-564-718-11	o	CONNECTOR 2P, MALE

RM-160 BOARD

Ref. No. or Q'ty	Part No.	SP	Description
1pc	1-662-919-11	o	PRINTED CIRCUIT BOARD, RM-160
CN15	1-778-666-11	o	CONNECTOR, FPC 9P
CN16	1-565-876-11	o	CONNECTOR 4P, MALE
CN17	1-564-013-11	o	CONNECTOR 3P, MALE
CN18	1-564-718-11	o	CONNECTOR 2P, MALE

RP-103 BOARD

Ref. No.
or Q'ty Part No. SP Description

The parts marked * are different, depending on the product serial numbers, as shown below:
*1) Serial number; 10001 through 10120 (For DSR-60 J)
Serial number; 10001 through 10180 (For DSR-60 UC)
Serial number; 10001 through 10250 (For DSR-60P CE)

Ref. No. or Q'ty	Part No.	SP	Description
1pc	A-8312-948-A	s	MOUNTED CIRCUIT BOARD, RP-103
2pcs	7-682-903-11	s	SCREW +PWH 3x6
C110	1-163-038-91	s	CERAMIC, CHIP 0.1uF 25V
C111	1-135-259-11	s	TANTALUM, CHIP 10uF 20% 6.3V
C112	1-163-038-91	s	CERAMIC, CHIP 0.1uF 25V
C113	1-104-851-11	s	TANTALUM, CHIP 10uF 20% 10V
C114	1-163-251-11	s	CERAMIC, CHIP 100pF 5% 50V
C115	1-163-038-91	s	CERAMIC, CHIP 0.1uF 25V
C116	1-163-989-11	s	CERAMIC, CHIP 0.033uF 10% 25V
C117	1-163-989-11	s	CERAMIC, CHIP 0.033uF 10% 25V
C118	1-163-021-91	s	CERAMIC, CHIP 0.01uF 10% 50V
C119	1-163-038-91	s	CERAMIC, CHIP 0.1uF 25V
C120	1-163-021-91	s	CERAMIC, CHIP 0.01uF 10% 50V
C121	1-163-275-11	s	CERAMIC, CHIP 0.001uF 5% 50V
C122	1-163-243-11	s	CERAMIC, CHIP 47pF 5% 50V
C124	1-163-091-00	s	CERAMIC, CHIP 8pF 50V
C127	1-163-021-91	s	CERAMIC, CHIP 0.01uF 10% 50V
C128	1-163-021-91	s	CERAMIC, CHIP 0.01uF 10% 50V
C129	1-163-021-91	s	CERAMIC, CHIP 0.01uF 10% 50V
C130	1-163-021-91	s	CERAMIC, CHIP 0.01uF 10% 50V
C131	1-163-021-91	s	CERAMIC, CHIP 0.01uF 10% 50V
C132	1-163-021-91	s	CERAMIC, CHIP 0.01uF 10% 50V
C133	1-163-021-91	s	CERAMIC, CHIP 0.01uF 10% 50V
C134	1-163-021-91	s	CERAMIC, CHIP 0.01uF 10% 50V
C135	1-104-851-11	s	TANTALUM, CHIP 10uF 20% 10V
C136	1-163-021-91	s	CERAMIC, CHIP 0.01uF 10% 50V
C137	1-163-133-00	s	CERAMIC, CHIP 470pF 5% 50V
C138	1-163-038-91	s	CERAMIC, CHIP 0.1uF 25V
C139	1-163-021-91	s	CERAMIC, CHIP 0.01uF 10% 50V
C140	1-163-021-91	s	CERAMIC, CHIP 0.01uF 10% 50V
C141	1-163-021-91	s	CERAMIC, CHIP 0.01uF 10% 50V
C142	1-163-121-00	s	CERAMIC, CHIP 150pF 5% 50V
C143	1-163-021-91	s	CERAMIC, CHIP 0.01uF 10% 50V
C144	1-163-021-91	s	CERAMIC, CHIP 0.01uF 10% 50V
C145	1-163-121-00	s	CERAMIC, CHIP 150pF 5% 50V
C146	1-163-038-91	s	CERAMIC, CHIP 0.1uF 25V
C147	1-135-259-11	s	TANTALUM, CHIP 10uF 20% 6.3V
C148	1-163-038-91	s	CERAMIC, CHIP 0.1uF 25V
C149	1-163-021-91	s	CERAMIC, CHIP 0.01uF 10% 50V
C150	1-163-016-00	s	CERAMIC, CHIP 0.0039MF 10% 50V
C151	1-163-020-00	s	CERAMIC, CHIP 0.0082uF 10% 50V
C152	1-163-243-11	s	CERAMIC, CHIP 47pF 5% 50V
C153	1-164-182-11	s	CERAMIC, CHIP 0.0033uF 10% 100V
C154	1-163-021-91	s	CERAMIC, CHIP 0.01uF 10% 50V
C155	1-163-243-11	s	CERAMIC, CHIP 47pF 5% 50V
C156	1-163-016-00	s	CERAMIC, CHIP 0.0039MF 10% 50V
C157	1-163-020-00	s	CERAMIC, CHIP 0.0082uF 10% 50V
C158	1-163-021-91	s	CERAMIC, CHIP 0.01uF 10% 50V
C159	1-164-182-11	s	CERAMIC, CHIP 0.0033uF 10% 100V
C160	1-163-021-91	s	CERAMIC, CHIP 0.01uF 10% 50V
C161	1-163-021-91	s	CERAMIC, CHIP 0.01uF 10% 50V
C162	1-163-038-91	s	CERAMIC, CHIP 0.1uF 25V

(RP-103 BOARD)

Ref. No. or Q'ty	Part No.	SP	Description
C163	1-135-259-11	s	TANTALUM, CHIP 10uF 20% 6.3V
C164	1-163-021-91	s	CERAMIC, CHIP 0.01uF 10% 50V
C201	1-163-021-91	s	CERAMIC, CHIP 0.01uF 10% 50V
C202	1-163-021-91	s	CERAMIC, CHIP 0.01uF 10% 50V
C203	1-135-159-21	s	TANTALUM, CHIP 10uF 10% 20V
C204	1-163-038-91	s	CERAMIC, CHIP 0.1uF 25V
C205	1-163-259-91	s	CERAMIC, CHIP 220pF 5% 50V
C206	1-163-038-91	s	CERAMIC, CHIP 0.1uF 25V
C207	1-163-259-91	s	CERAMIC, CHIP 220pF 5% 50V
C208	1-163-021-91	s	CERAMIC, CHIP 0.01uF 10% 50V
C209	1-163-021-91	s	CERAMIC, CHIP 0.01uF 10% 50V
C210	1-163-021-91	s	CERAMIC, CHIP 0.01uF 10% 50V
C211	1-164-161-11	s	CERAMIC, CHIP 0.0022uF 10% 100V
C212	1-163-037-11	s	CERAMIC, CHIP 0.022uF 10% 25V
C213	1-104-914-11	s	TANTALUM 22uF 20% 16V
C214	1-163-038-91	s	CERAMIC, CHIP 0.1uF 25V
C215	1-163-021-91	s	CERAMIC, CHIP 0.01uF 10% 50V
C216	1-163-038-91	s	CERAMIC, CHIP 0.1uF 25V
C217	1-104-851-11	s	TANTALUM, CHIP 10uF 20% 10V
C218	1-163-038-91	s	CERAMIC, CHIP 0.1uF 25V
C219	1-163-021-91	s	CERAMIC, CHIP 0.01uF 10% 50V
C220	1-135-259-11	s	TANTALUM, CHIP 10uF 20% 6.3V
C221	1-163-038-91	s	CERAMIC, CHIP 0.1uF 25V
C222	1-135-145-11	s	TANTALUM, CHIP 0.47uF 10% 35V
C223	1-135-259-11	s	TANTALUM, CHIP 10uF 20% 6.3V
C224	1-163-275-11	s	CERAMIC, CHIP 0.001uF 5% 50V
C225	1-163-021-91	s	CERAMIC, CHIP 0.01uF 10% 50V
C226	1-163-038-91	s	CERAMIC, CHIP 0.1uF 25V
C227	1-163-038-91	s	CERAMIC, CHIP 0.1uF 25V
C228	1-163-275-11	s	CERAMIC, CHIP 0.001uF 5% 50V
C229	1-163-275-11	s	CERAMIC, CHIP 0.001uF 5% 50V
C230	1-163-038-91	s	CERAMIC, CHIP 0.1uF 25V
C231	1-163-038-91	s	CERAMIC, CHIP 0.1uF 25V
C233	1-163-038-91	s	CERAMIC, CHIP 0.1uF 25V
C234	1-163-038-91	s	CERAMIC, CHIP 0.1uF 25V
C235	1-104-823-11	s	TANTALUM, CHIP 47uF 20% 16V
C236	1-163-038-91	s	CERAMIC, CHIP 0.1uF 25V
C237	1-135-159-21	s	TANTALUM, CHIP 10uF 10% 20V
C240	1-135-259-11	s	TANTALUM, CHIP 10uF 20% 6.3V
CN101	1-566-621-11	o	CONNECTOR, PS 34P, FEMALE
D201	8-719-041-39	s	DIODE KV1470
D202	8-719-027-95	s	DIODE HSM88WK
FL101	1-411-274-21	s	DELAY LINE 23ns
FL102	1-233-343-21	s	FILTER, LOW-PASS, CHIP 22MHz
FL103	1-233-344-21	s	FILTER, LOW-PASS, CHIP 22MHz
FL201	1-233-351-21	s	FILTER, BAND-PASS, CHIP 465kHz
FL202	1-233-350-21	s	FILTER, BAND-PASS1, CHIP 697kHz
IC102	8-752-070-11	s	IC CXA1761R
IC103	8-752-070-12	s	IC CXA1762Q
IC201	8-759-062-66	s	IC TC7S66F
IC202	8-759-469-25	s	IC AK6440AF-E2
IC203	8-759-064-36	s	IC MB88346BPFV
IC204	8-759-327-00	s	IC CXA8044Q-T4
IC205	8-752-371-18	s	IC CXD2302Q
IC206	8-752-379-36	s	IC CXD2189AR
IC207	8-759-524-28	s	IC TC74VHC245FT(EL)
IC208	8-759-524-28	s	IC TC74VHC245FT(EL)

(RP-103 BOARD)

Ref. No. or Q'ty	Part No.	SP	Description	
IC209	8-759-259-77	s	IC PQ20VZ5U	
L103	1-414-398-11	s	INDUCTOR, CHIP 10uH	
L104	1-414-398-11	s	INDUCTOR, CHIP 10uH	
L106	1-410-393-11	s	INDUCTOR, CHIP 100uH	
L107	1-414-398-11	s	INDUCTOR, CHIP 10uH	
L108	1-414-398-11	s	INDUCTOR, CHIP 10uH	
L109	1-414-398-11	s	INDUCTOR, CHIP 10uH	
L110	1-414-398-11	s	INDUCTOR, CHIP 10uH	
L201	1-414-398-11	s	INDUCTOR, CHIP 10uH	
L202	1-412-282-41	s	INDUCTOR, CHIP 470uH	
L203	1-414-398-11	s	INDUCTOR, CHIP 10uH	
L204	1-414-398-11	s	INDUCTOR, CHIP 10uH	
L205	1-414-398-11	s	INDUCTOR, CHIP 10uH	
L206	1-410-738-41	s	INDUCTOR, CHIP 0.56uH	
L207	1-412-364-11	s	FILTER, NOISE, CHIP	
L208	1-412-364-11	s	FILTER, NOISE, CHIP	
L210	1-410-381-11	s	INDUCTOR, CHIP 10uH	
L211	1-410-381-11	s	INDUCTOR, CHIP 10uH	
PS1	⚠ 1-576-123-21	s	LINK, IC, CHIP 0.8A	
PS2	⚠ 1-576-123-21	s	LINK, IC, CHIP 0.8A	
Q101	8-729-905-35	s	TRANSISTOR 2SC4081R	
Q102	8-729-905-35	s	TRANSISTOR 2SC4081R	
Q103	8-729-905-23	s	TRANSISTOR 2SA1576R	
Q104	8-729-905-35	s	TRANSISTOR 2SC4081R	
Q105	8-729-905-35	s	TRANSISTOR 2SC4081R	
Q106	8-729-905-35	s	TRANSISTOR 2SC4081R	
Q107	8-729-905-35	s	TRANSISTOR 2SC4081R	
Q201	1-801-806-11	s	TRANSISTOR DTC144EKA-T146	
Q202	8-729-905-35	s	TRANSISTOR 2SC4081R	
R113	1-216-065-91	s	METAL, CHIP 4.7k 5% 1/10W	
R114	1-216-013-00	s	METAL, CHIP 33 5% 1/10W	
R115	1-216-069-00	s	METAL, CHIP 6.8k 5% 1/10W	
R116	1-216-049-91	s	METAL, CHIP 1k 5% 1/10W	
R117	1-216-021-00	s	METAL, CHIP 68 5% 1/10W	
R118	1-216-049-91	s	METAL, CHIP 1k 5% 1/10W	
R119	1-216-113-00	s	METAL, CHIP 470k 5% 1/10W	
R120	1-216-077-00	s	METAL, CHIP 15k 5% 1/10W	
R121	1-216-073-00	s	METAL, CHIP 10k 5% 1/10W	
R122	1-216-113-00	s	METAL, CHIP 470k 5% 1/10W	
R123	1-216-039-00	s	METAL, CHIP 390 5% 1/10W	
R124	1-216-039-00	s	METAL, CHIP 390 5% 1/10W	
R125	1-216-684-91	s	METAL, CHIP 24k 0.5% 1/10W	
R126	1-216-684-91	s	METAL, CHIP 24k 0.5% 1/10W	
R127	1-216-075-00	s	METAL, CHIP 12k 5% 1/10W	
R128	1-216-651-11	s	METAL, CHIP 1k 0.5% 1/10W	*1)
R130	1-216-295-91	s	RES, CHIP 0	
R131	1-216-089-91	s	METAL, CHIP 47k 5% 1/10W	
R132	1-216-075-00	s	METAL, CHIP 12k 5% 1/10W	
R133	1-216-037-00	s	METAL, CHIP 330 5% 1/10W	
R134	1-216-037-00	s	METAL, CHIP 330 5% 1/10W	
R135	1-216-037-00	s	METAL, CHIP 330 5% 1/10W	
R136	1-216-037-00	s	METAL, CHIP 330 5% 1/10W	
R137	1-216-037-00	s	METAL, CHIP 330 5% 1/10W	
R138	1-216-041-00	s	METAL, CHIP 470 5% 1/10W	
R139	1-216-636-11	s	METAL, CHIP 240 0.5% 1/10W	
R140	1-216-295-91	s	RES, CHIP 0	
R141	1-216-636-11	s	METAL, CHIP 240 0.5% 1/10W	

(RP-103 BOARD)

Ref. No. or Q'ty	Part No.	SP	Description
R142	1-216-057-00	s	METAL, CHIP 2.2k 5% 1/10W
R143	1-216-065-91	s	METAL, CHIP 4.7k 5% 1/10W
R144	1-216-025-91	s	METAL, CHIP 100 5% 1/10W
R145	1-216-027-00	s	METAL, CHIP 120 5% 1/10W
R146	1-216-689-11	s	METAL, CHIP 39k 0.5% 1/10W
R147	1-216-057-00	s	METAL, CHIP 2.2k 5% 1/10W
R149	1-216-065-91	s	METAL, CHIP 4.7k 5% 1/10W
R150	1-216-025-91	s	METAL, CHIP 100 5% 1/10W
R151	1-216-682-11	s	METAL, CHIP 20k 0.5% 1/10W
R152	1-216-027-00	s	METAL, CHIP 120 5% 1/10W
R153	1-216-683-11	s	METAL, CHIP 22k 0.5% 1/10W
R154	1-216-049-91	s	METAL, CHIP 1k 5% 1/10W
R155	1-216-037-00	s	METAL, CHIP 330 5% 1/10W
R201	1-216-097-91	s	METAL, CHIP 100k 5% 1/10W
R202	1-216-049-91	s	METAL, CHIP 1k 5% 1/10W
R203	1-216-049-91	s	METAL, CHIP 1k 5% 1/10W
R204	1-216-057-00	s	METAL, CHIP 2.2k 5% 1/10W
R206	1-216-057-00	s	METAL, CHIP 2.2k 5% 1/10W
R207	1-216-071-00	s	METAL, CHIP 8.2k 5% 1/10W
R208	1-216-077-00	s	METAL, CHIP 15k 5% 1/10W
R209	1-216-073-00	s	METAL, CHIP 10k 5% 1/10W
R210	1-216-073-00	s	METAL, CHIP 10k 5% 1/10W
R211	1-216-085-00	s	METAL, CHIP 33k 5% 1/10W
R212	1-216-073-00	s	METAL, CHIP 10k 5% 1/10W
R213	1-216-085-00	s	METAL, CHIP 33k 5% 1/10W
R214	1-216-081-00	s	METAL, CHIP 22k 5% 1/10W
R215	1-216-081-00	s	METAL, CHIP 22k 5% 1/10W
R216	1-216-073-00	s	METAL, CHIP 10k 5% 1/10W
R217	1-216-037-00	s	METAL, CHIP 330 5% 1/10W
R218	1-216-073-00	s	METAL, CHIP 10k 5% 1/10W
R219	1-216-073-00	s	METAL, CHIP 10k 5% 1/10W
R220	1-216-073-00	s	METAL, CHIP 10k 5% 1/10W
R221	1-216-049-91	s	METAL, CHIP 1k 5% 1/10W
R222	1-216-073-00	s	METAL, CHIP 10k 5% 1/10W
R223	1-216-073-00	s	METAL, CHIP 10k 5% 1/10W
R224	1-216-057-00	s	METAL, CHIP 2.2k 5% 1/10W
R225	1-216-035-00	s	METAL, CHIP 270 5% 1/10W
R226	1-216-025-91	s	METAL, CHIP 100 5% 1/10W
R227	1-216-089-91	s	METAL, CHIP 47k 5% 1/10W
R228	1-216-089-91	s	METAL, CHIP 47k 5% 1/10W
R229	1-216-025-91	s	METAL, CHIP 100 5% 1/10W
R230	1-216-025-91	s	METAL, CHIP 100 5% 1/10W
R231	1-216-025-91	s	METAL, CHIP 100 5% 1/10W
R232	1-216-025-91	s	METAL, CHIP 100 5% 1/10W
R233	1-216-655-11	s	METAL, CHIP 1.5k 0.5% 1/10W
R234	1-216-650-11	s	METAL, CHIP 910 0.5% 1/10W
RB201	1-239-412-11	s	RESISTOR BLOCK, CHIP 100 x 4
RB202	1-239-412-11	s	RESISTOR BLOCK, CHIP 100 x 4
RB203	1-239-412-11	s	RESISTOR BLOCK, CHIP 100 x 4
RB204	1-239-412-11	s	RESISTOR BLOCK, CHIP 100 x 4
RB205	1-239-412-11	s	RESISTOR BLOCK, CHIP 100 x 4
RB206	1-239-412-11	s	RESISTOR BLOCK, CHIP 100 x 4
RB207	1-239-412-11	s	RESISTOR BLOCK, CHIP 100 x 4
RB208	1-239-412-11	s	RESISTOR BLOCK, CHIP 100 x 4
RB209	1-239-412-11	s	RESISTOR BLOCK, CHIP 100 x 4

SDI-26A BOARD(DSBK-110/110P)

Ref. No. or Q'ty | Part No. | SP Description

The parts marked * are different, depending on the product serial numbers, as shown below:

*1) Serial number; 10001 through 10320 (For DSBK-110 J)
Serial number; 10001 through 10120 (For DSBK-110 UC)
Serial number; 10001 through 10400 (For DSBK-110P CE)
*2) Serial number; 10461 and higher (For DSBK-110 J)
Serial number; 10401 and higher (For DSBK-110 UC)
Serial number; 10561 and higher (For DSBK-110P CE)
*3) Serial number; 10461 through 10650 (For DSBK-110 J)
Serial number; 10401 through 10460 (For DSBK-110 UC)
Serial number; 10561 through 10690 (For DSBK-110P CE)
*4) Serial number; 10001 through 10650 (For DSBK-110 J)
Serial number; 10001 through 10460 (For DSBK-110 UC)
Serial number; 10001 through 10690 (For DSBK-110P CE)
*6) Serial number; 10891 and higher (For DSBK-110 J)
Serial number; 10691 and higher (For DSBK-110 UC)
Serial number; 10741 and higher (For DSBK-110P CE)

Ref. No. or Q'ty	Part No.	SP	Description	
1pc	7-621-759-45	s	+PSW, 2.6x6	
1pc	3-179-084-01	s	LEVER (R), PRINTED CIRCUIT BOARD	
1pc	3-179-085-01	s	LEVER (L), PRINTED CIRCUIT BOARD	
1pc	3-189-543-03	o	IC HEAT SINK (A)	
1pc	3-189-544-04	o	IC HEAT SINK (B)	
1pc	7-621-770-87	s	SCREW +B 2.6x5	
C103	1-126-925-11	s	ELECT 470uF 20% 10V	
C104	1-126-925-11	s	ELECT 470uF 20% 10V	
C105	1-126-925-11	s	ELECT 470uF 20% 10V	
C107	1-163-038-91	s	CERAMIC, CHIP 0.1uF 25V	
C108	1-163-038-91	s	CERAMIC, CHIP 0.1uF 25V	
C109	1-163-038-91	s	CERAMIC, CHIP 0.1uF 25V	
C208	1-163-038-91	s	CERAMIC, CHIP 0.1uF 25V	
C244	1-163-038-91	s	CERAMIC, CHIP 0.1uF 25V	
C247	1-163-259-91	s	CERAMIC, CHIP 220pF 5% 50V	
C300	1-163-133-00	s	CERAMIC, CHIP 470pF 5% 50V	
C301	1-126-394-11	s	ELECT, CHIP 10uF 20% 16V	*4)
	1-126-157-11	s	ELECT 10uF 20% 16V	*5)
C302	1-163-038-91	s	CERAMIC, CHIP 0.1uF 25V	
C303	1-163-038-91	s	CERAMIC, CHIP 0.1uF 25V	
C304	1-163-038-91	s	CERAMIC, CHIP 0.1uF 25V	
C306	1-163-038-91	s	CERAMIC, CHIP 0.1uF 25V	
C308	1-163-038-91	s	CERAMIC, CHIP 0.1uF 25V	
C309	1-163-038-91	s	CERAMIC, CHIP 0.1uF 25V	
C310	1-163-038-91	s	CERAMIC, CHIP 0.1uF 25V	
C406	1-163-038-91	s	CERAMIC, CHIP 0.1uF 25V	
C408	1-163-038-91	s	CERAMIC, CHIP 0.1uF 25V	
C409	1-163-038-91	s	CERAMIC, CHIP 0.1uF 25V	
C410	1-163-038-91	s	CERAMIC, CHIP 0.1uF 25V	
C411	1-163-038-91	s	CERAMIC, CHIP 0.1uF 25V	
C412	1-163-038-91	s	CERAMIC, CHIP 0.1uF 25V	
C413	1-163-038-91	s	CERAMIC, CHIP 0.1uF 25V	
C416	1-126-394-11	s	ELECT, CHIP 10uF 20% 16V	*4)
	1-126-157-11	s	ELECT 10uF 20% 16V	*5)
C417	1-126-394-11	s	ELECT, CHIP 10uF 20% 16V	*4)
	1-126-157-11	s	ELECT 10uF 20% 16V	*5)
C420	1-163-038-91	s	CERAMIC, CHIP 0.1uF 25V	
C421	1-163-038-91	s	CERAMIC, CHIP 0.1uF 25V	
C424	1-163-038-91	s	CERAMIC, CHIP 0.1uF 25V	

(SDI-26A BOARD(DSBK-110/110P))

Ref. No. or Q'ty	Part No.	SP	Description	
C425	1-163-038-91	s	CERAMIC, CHIP 0.1uF 25V	
C428	1-163-038-91	s	CERAMIC, CHIP 0.1uF 25V	
C429	1-163-038-91	s	CERAMIC, CHIP 0.1uF 25V	
C433	1-163-038-91	s	CERAMIC, CHIP 0.1uF 25V	
C434	1-163-038-91	s	CERAMIC, CHIP 0.1uF 25V	
C436	1-163-038-91	s	CERAMIC, CHIP 0.1uF 25V	
C437	1-163-038-91	s	CERAMIC, CHIP 0.1uF 25V	
C438	1-163-038-91	s	CERAMIC, CHIP 0.1uF 25V	
C439	1-163-038-91	s	CERAMIC, CHIP 0.1uF 25V	
C440	1-163-038-91	s	CERAMIC, CHIP 0.1uF 25V	
C441	1-163-038-91	s	CERAMIC, CHIP 0.1uF 25V	
C442	1-163-038-91	s	CERAMIC, CHIP 0.1uF 25V	
C443	1-163-038-91	s	CERAMIC, CHIP 0.1uF 25V	
C444	1-163-038-91	s	CERAMIC, CHIP 0.1uF 25V	
C500	1-163-038-91	s	CERAMIC, CHIP 0.1uF 25V	
C501	1-163-038-91	s	CERAMIC, CHIP 0.1uF 25V	
C502	1-163-038-91	s	CERAMIC, CHIP 0.1uF 25V	
C503	1-163-038-91	s	CERAMIC, CHIP 0.1uF 25V	
C504	1-126-934-11	s	ELECT 220uF 20% 16V	
C505	1-163-038-91	s	CERAMIC, CHIP 0.1uF 25V	
C507	1-163-038-91	s	CERAMIC, CHIP 0.1uF 25V	
C508	1-163-038-91	s	CERAMIC, CHIP 0.1uF 25V	
C509	1-163-038-91	s	CERAMIC, CHIP 0.1uF 25V	
C510	1-163-121-00	s	CERAMIC, CHIP 150pF 5% 50V	
C511	1-126-934-11	s	ELECT 220uF 20% 16V	
C512	1-126-394-11	s	ELECT, CHIP 10uF 20% 16V	*4)
	1-126-157-11	s	ELECT 10uF 20% 16V	*5)
C513	1-163-038-91	s	CERAMIC, CHIP 0.1uF 25V	
C514	1-163-038-91	s	CERAMIC, CHIP 0.1uF 25V	
C515	1-163-038-91	s	CERAMIC, CHIP 0.1uF 25V	
C516	1-163-038-91	s	CERAMIC, CHIP 0.1uF 25V	
C517	1-163-038-91	s	CERAMIC, CHIP 0.1uF 25V	
C518	1-163-038-91	s	CERAMIC, CHIP 0.1uF 25V	
C519	1-126-934-11	s	ELECT 220uF 20% 16V	
C520	1-126-934-11	s	ELECT 220uF 20% 16V	
C521	1-163-038-91	s	CERAMIC, CHIP 0.1uF 25V	
C522	1-163-038-91	s	CERAMIC, CHIP 0.1uF 25V	
CN500	1-750-880-11	s	CONNECTOR, MINI COAX, FEMALE	
D500	8-719-404-35	s	DIODE MA141WK	
D501	8-719-989-22	s	LED CL-150R-CD, RED	
D502	8-719-404-35	s	DIODE MA141WK	
E100	1-535-881-21	o	TERMINAL, TP	
E200	1-535-881-21	o	TERMINAL, TP	
E300	1-535-881-21	o	TERMINAL, TP	
E400	1-535-881-21	o	TERMINAL, TP	
E500	1-535-881-21	o	TERMINAL, TP	
FB500	1-543-813-21	s	CHOKE, NOISE, CHIP	
FB501	1-543-813-21	s	CHOKE, NOISE, CHIP	
FB502	1-543-813-21	s	CHOKE, NOISE, CHIP	
FB503	1-543-813-21	s	CHOKE, NOISE, CHIP	
IC207	8-759-186-63	s	IC TC74VHC245F(EL)	
IC251	8-759-186-44	s	IC TC74VHC125F	
IC300	8-759-483-67	s	IC UPD78011FCW-026	
IC301	8-759-927-12	s	IC SN74HCT244ANS	
IC302	8-759-186-49	s	IC TC74VHC139F(EL)	
IC303	8-759-926-80	s	IC SN74HC573NS	

(SDI-26A BOARD(DSBK-110/110P))

Ref. No. or Q'ty	Part No.	SP	Description	
IC304	8-759-233-75	s	IC TC74HCT245AF	
IC307	8-759-081-42	s	IC TC74VHC00F	
IC308	8-759-393-38	s	IC SN74LVC245ANS-E20	
IC401	8-759-328-28	s	IC ZA4024	
IC402	8-759-328-28	s	IC ZA4024	
IC407	8-759-186-63	s	IC TC74VHC245F(EL)	
IC408	8-759-186-63	s	IC TC74VHC245F(EL)	
IC409	8-759-079-87	s	IC TC74VHC245FS(EL)	*4)
	8-759-186-63	s	IC TC74VHC245F(EL)	*5)
IC410	8-759-079-87	s	IC TC74VHC245FS(EL)	*4)
	8-759-186-63	s	IC TC74VHC245F(EL)	*5)
IC500	8-741-601-11	s	IC SBX1601A	
IC502	8-759-324-03	s	IC HA17431UA-TL	
IC503	8-759-510-71	s	IC UPC358G2-E2	
IC630	8-759-186-02	s	IC TC74VHCT245F(EL)	*5)
L100	1-412-527-11	s	INDUCTOR 15uH	
L101	1-412-533-21	s	INDUCTOR 47uH	
L102	1-412-533-21	s	INDUCTOR 47uH	
L400	1-410-470-11	s	INDUCTOR 10uH	
L401	1-410-470-11	s	INDUCTOR 10uH	
L500	1-414-102-11	s	INDUCTOR 0.22uH	
PS100	⚠ 1-532-686-21	s	LINK, IC 2.7A	
PS101	⚠ 1-532-984-11	s	LINK, IC 2A	
PS102	⚠ 1-532-984-11	s	LINK, IC 2A	
Q500	8-729-105-68	s	TRANSISTOR 2SC3356-K	
Q501	8-729-105-68	s	TRANSISTOR 2SC3356-K	
Q502	8-729-105-68	s	TRANSISTOR 2SC3356-K	
Q503	8-729-105-68	s	TRANSISTOR 2SC3356-K	
Q504	8-729-028-91	s	TRANSISTOR DTA144EUA-T106	
Q506	8-729-028-91	s	TRANSISTOR DTA144EUA-T106	
R206	1-216-089-91	s	METAL, CHIP 47k 5% 1/10W	
R207	1-216-089-91	s	METAL, CHIP 47k 5% 1/10W	
R208	1-216-089-91	s	METAL, CHIP 47k 5% 1/10W	
R221	1-216-025-91	s	METAL, CHIP 100 5% 1/10W	*2)
R241	1-216-089-91	s	METAL, CHIP 47k 5% 1/10W	
R242	1-216-089-91	s	METAL, CHIP 47k 5% 1/10W	
R243	1-216-089-91	s	METAL, CHIP 47k 5% 1/10W	
R244	1-216-089-91	s	METAL, CHIP 47k 5% 1/10W	
R245	1-216-089-91	s	METAL, CHIP 47k 5% 1/10W	
R246	1-216-089-91	s	METAL, CHIP 47k 5% 1/10W	
R247	1-216-089-91	s	METAL, CHIP 47k 5% 1/10W	
R248	1-216-089-91	s	METAL, CHIP 47k 5% 1/10W	
R249	1-216-089-91	s	METAL, CHIP 47k 5% 1/10W	
R250	1-216-089-91	s	METAL, CHIP 47k 5% 1/10W	
R251	1-216-089-91	s	METAL, CHIP 47k 5% 1/10W	
R300	1-216-295-91	s	RES, CHIP 0	
R302	1-216-089-91	s	METAL, CHIP 47k 5% 1/10W	
R306	1-216-089-91	s	METAL, CHIP 47k 5% 1/10W	
R307	1-216-089-91	s	METAL, CHIP 47k 5% 1/10W	
R308	1-216-109-00	s	METAL, CHIP 330k 5% 1/10W	
R309	1-216-073-00	s	METAL, CHIP 10k 5% 1/10W	*1)
R310	1-216-089-91	s	METAL, CHIP 47k 5% 1/10W	
R311	1-216-049-91	s	METAL, CHIP 1k 5% 1/10W	
R312	1-216-025-91	s	METAL, CHIP 100 5% 1/10W	*4)
R313	1-216-049-91	s	METAL, CHIP 1k 5% 1/10W	

(SDI-26A BOARD(DSBK-110/110P))

Ref. No. or Q'ty	Part No.	SP	Description	
R314	1-216-025-91	s	METAL, CHIP 100 5% 1/10W	
R315	1-216-025-91	s	METAL, CHIP 100 5% 1/10W	
R316	1-216-025-91	s	METAL, CHIP 100 5% 1/10W	
R317	1-216-073-00	s	METAL, CHIP 10k 5% 1/10W	
R318	1-216-295-91	s	RES, CHIP 0	*4)
R320	1-216-073-00	s	METAL, CHIP 10k 5% 1/10W	
R321	1-216-073-00	s	METAL, CHIP 10k 5% 1/10W	
R322	1-216-049-91	s	METAL, CHIP 1k 5% 1/10W	
R326	1-216-073-00	s	METAL, CHIP 10k 5% 1/10W	
R329	1-216-089-91	s	METAL, CHIP 47k 5% 1/10W	
R331	1-216-295-91	s	RES, CHIP 0	*3)
R406	1-216-089-91	s	METAL, CHIP 47k 5% 1/10W	
R407	1-216-089-91	s	METAL, CHIP 47k 5% 1/10W	
R408	1-216-089-91	s	METAL, CHIP 47k 5% 1/10W	
R409	1-216-295-91	s	RES, CHIP 0	*4)
R410	1-216-295-91	s	RES, CHIP 0	*4)
R411	1-216-073-00	s	METAL, CHIP 10k 5% 1/10W	
R412	1-216-073-00	s	METAL, CHIP 10k 5% 1/10W	
R413	1-216-073-00	s	METAL, CHIP 10k 5% 1/10W	
R414	1-216-073-00	s	METAL, CHIP 10k 5% 1/10W	
R415	1-216-073-00	s	METAL, CHIP 10k 5% 1/10W	
R417	1-216-295-91	s	RES, CHIP 0	*4)
R418	1-216-295-91	s	RES, CHIP 0	*4)
R419	1-216-295-91	s	RES, CHIP 0	*4)
R420	1-216-295-91	s	RES, CHIP 0	*4)
R427	1-216-295-91	s	RES, CHIP 0	*4)
R428	1-216-073-00	s	METAL, CHIP 10k 5% 1/10W	
R431	1-216-295-91	s	RES, CHIP 0	*4)
R437	1-216-017-91	s	METAL, CHIP 47 5% 1/10W	
R438	1-216-017-91	s	METAL, CHIP 47 5% 1/10W	
R439	1-216-001-00	s	METAL, CHIP 10 5% 1/10W	
R440	1-216-001-00	s	METAL, CHIP 10 5% 1/10W	
R441	1-216-001-00	s	METAL, CHIP 10 5% 1/10W	
R442	1-216-001-00	s	METAL, CHIP 10 5% 1/10W	
R443	1-216-017-91	s	METAL, CHIP 47 5% 1/10W	
R444	1-216-017-91	s	METAL, CHIP 47 5% 1/10W	
R445	1-216-017-91	s	METAL, CHIP 47 5% 1/10W	
R446	1-216-017-91	s	METAL, CHIP 47 5% 1/10W	
R447	1-216-017-91	s	METAL, CHIP 47 5% 1/10W	
R448	1-216-017-91	s	METAL, CHIP 47 5% 1/10W	
R449	1-216-017-91	s	METAL, CHIP 47 5% 1/10W	
R450	1-216-017-91	s	METAL, CHIP 47 5% 1/10W	
R451	1-216-017-91	s	METAL, CHIP 47 5% 1/10W	
R500	1-216-623-11	s	METAL, CHIP 68 0.5% 1/10W	
R501	1-216-625-11	s	METAL, CHIP 82 0.5% 1/10W	
R502	1-216-029-00	s	METAL, CHIP 150 5% 1/10W	
R503	1-216-295-91	s	RES, CHIP 0	
R504	1-216-623-11	s	METAL, CHIP 68 0.5% 1/10W	
R505	1-216-613-11	s	METAL, CHIP 27 0.5% 1/10W	
R506	1-216-624-11	s	METAL, CHIP 75 0.5% 1/10W	
R508	1-216-623-11	s	METAL, CHIP 68 0.5% 1/10W	
R509	1-216-613-11	s	METAL, CHIP 27 0.5% 1/10W	
R510	1-216-624-11	s	METAL, CHIP 75 0.5% 1/10W	
R511	1-216-033-00	s	METAL, CHIP 220 5% 1/10W	
R512	1-216-049-91	s	METAL, CHIP 1k 5% 1/10W	
R513	1-216-073-00	s	METAL, CHIP 10k 5% 1/10W	
R514	1-216-033-00	s	METAL, CHIP 220 5% 1/10W	
R515	1-216-033-00	s	METAL, CHIP 220 5% 1/10W	
R516	1-216-033-00	s	METAL, CHIP 220 5% 1/10W	

(SDI-26A BOARD(DSBK-110/110P))

Ref. No. or Q'ty	Part No.	SP	Description	
R517	1-216-033-00	s	METAL, CHIP 220 5% 1/10W	
R518	1-216-033-00	s	METAL, CHIP 220 5% 1/10W	
R519	1-216-033-00	s	METAL, CHIP 220 5% 1/10W	
R520	1-216-033-00	s	METAL, CHIP 220 5% 1/10W	
R521	1-216-033-00	s	METAL, CHIP 220 5% 1/10W	
R522	1-216-033-00	s	METAL, CHIP 220 5% 1/10W	
R523	1-216-033-00	s	METAL, CHIP 220 5% 1/10W	
R524	1-216-033-00	s	METAL, CHIP 220 5% 1/10W	
R525	1-216-033-00	s	METAL, CHIP 220 5% 1/10W	
R526	1-216-689-11	s	METAL, CHIP 39k 0.5% 1/10W	
R527	1-216-077-00	s	METAL, CHIP 15k 5% 1/10W	
R528	1-216-689-11	s	METAL, CHIP 39k 0.5% 1/10W	
R529	1-216-077-00	s	METAL, CHIP 15k 5% 1/10W	
R530	1-216-295-91	s	RES, CHIP 0	*4)
R531	1-216-025-91	s	METAL, CHIP 100 5% 1/10W	
R532	1-216-025-91	s	METAL, CHIP 100 5% 1/10W	
R533	1-216-295-91	s	RES, CHIP 0	*4)
R534	1-216-295-91	s	RES, CHIP 0	*4)
R535	1-216-049-91	s	METAL, CHIP 1k 5% 1/10W	
R536	1-216-089-91	s	METAL, CHIP 47k 5% 1/10W	
R537	1-216-073-00	s	METAL, CHIP 10k 5% 1/10W	
R538	1-216-295-91	s	RES, CHIP 0	
R539	1-216-295-91	s	RES, CHIP 0	
R542	1-216-651-11	s	METAL, CHIP 1k 0.5% 1/10W	
R543	1-216-651-11	s	METAL, CHIP 1k 0.5% 1/10W	
R545	1-216-675-11	s	METAL, CHIP 10k 0.5% 1/10W	
R546	1-216-653-11	s	METAL, CHIP 1.2k 0.5% 1/10W	
R548	1-216-295-91	s	RES, CHIP 0	
R549	1-216-685-11	s	METAL, CHIP 27k 0.5% 1/10W	
R550	1-216-037-00	s	METAL, CHIP 330 5% 1/10W	
R560	1-216-295-91	s	RES, CHIP 0	
R562	1-216-663-11	s	METAL, CHIP 3.3k 0.5% 1/10W	
R563	1-216-295-91	s	RES, CHIP 0	
R564	1-216-627-11	s	METAL, CHIP 100 0.5% 1/10W	
RB300	1-239-306-11	s	RESISTOR BLOCK, CHIP 10k x 8	
RB301	1-239-306-11	s	RESISTOR BLOCK, CHIP 10k x 8	
RB302	1-239-306-11	s	RESISTOR BLOCK, CHIP 10k x 8	
RV500	1-237-034-11	s	RES, ADJ, METAL 2k	
S301	1-554-843-11	s	SWITCH, SLIDE	
X300	1-579-175-11	s	RESONATOR, CERAMIC 10.00MHz	

SDI-28 BOARD(DSBK-100/100P)

Ref. No. or Q'ty	Part No.	SP	Description
2pcs	7-621-759-45	s	+PSW, 2.6x6
1pc	3-189-543-03	o	IC HEAT SINk (A)
1pc	3-189-544-04	o	IC HEAT SINk (B)
1pc	7-621-770-87	s	SCREW +B 2.6x5
2pcs	7-623-422-07	s	LW 3, TYPE B
C101	1-163-038-91	s	CERAMIC, CHIP 0.1uF 25V
C102	1-163-038-91	s	CERAMIC, CHIP 0.1uF 25V
C103	1-163-038-91	s	CERAMIC, CHIP 0.1uF 25V
C104	1-163-038-91	s	CERAMIC, CHIP 0.1uF 25V
C106	1-163-251-11	s	CERAMIC, CHIP 100pF 5% 50V
C107	1-163-038-91	s	CERAMIC, CHIP 0.1uF 25V
C108	1-163-038-91	s	CERAMIC, CHIP 0.1uF 25V
C109	1-163-251-11	s	CERAMIC, CHIP 100pF 5% 50V
C110	1-163-038-91	s	CERAMIC, CHIP 0.1uF 25V
C111	1-163-038-91	s	CERAMIC, CHIP 0.1uF 25V
C112	1-163-038-91	s	CERAMIC, CHIP 0.1uF 25V
C113	1-163-038-91	s	CERAMIC, CHIP 0.1uF 25V
C114	1-163-038-91	s	CERAMIC, CHIP 0.1uF 25V
C115	1-163-038-91	s	CERAMIC, CHIP 0.1uF 25V
C116	1-163-275-11	s	CERAMIC, CHIP 0.001uF 5% 50V
C117	1-163-038-91	s	CERAMIC, CHIP 0.1uF 25V
C118	1-163-038-91	s	CERAMIC, CHIP 0.1uF 25V
C119	1-163-038-91	s	CERAMIC, CHIP 0.1uF 25V
C120	1-163-038-91	s	CERAMIC, CHIP 0.1uF 25V
C121	1-126-391-11	s	ELECT, CHIP 47uF 20% 6.3V
C122	1-163-038-91	s	CERAMIC, CHIP 0.1uF 25V
C123	1-126-391-11	s	ELECT, CHIP 47uF 20% 6.3V
C124	1-163-038-91	s	CERAMIC, CHIP 0.1uF 25V
C125	1-163-038-91	s	CERAMIC, CHIP 0.1uF 25V
C126	1-126-925-11	s	ELECT 470uF 20% 10V
C127	1-163-038-91	s	CERAMIC, CHIP 0.1uF 25V
C128	1-163-038-91	s	CERAMIC, CHIP 0.1uF 25V
C129	1-163-251-11	s	CERAMIC, CHIP 100pF 5% 50V
C130	1-163-239-11	s	CERAMIC, CHIP 33pF 5% 50V
C201	1-163-038-91	s	CERAMIC, CHIP 0.1uF 25V
C202	1-163-038-91	s	CERAMIC, CHIP 0.1uF 25V
C203	1-126-394-11	s	ELECT, CHIP 10uF 20% 16V
C204	1-163-038-91	s	CERAMIC, CHIP 0.1uF 25V
C205	1-163-038-91	s	CERAMIC, CHIP 0.1uF 25V
C206	1-163-038-91	s	CERAMIC, CHIP 0.1uF 25V
C207	1-163-121-00	s	CERAMIC, CHIP 150pF 5% 50V
C208	1-126-394-11	s	ELECT, CHIP 10uF 20% 16V
C210	1-163-038-91	s	CERAMIC, CHIP 0.1uF 25V
C211	1-163-038-91	s	CERAMIC, CHIP 0.1uF 25V
C212	1-163-038-91	s	CERAMIC, CHIP 0.1uF 25V
C213	1-163-038-91	s	CERAMIC, CHIP 0.1uF 25V
C214	1-163-038-91	s	CERAMIC, CHIP 0.1uF 25V
C215	1-126-925-11	s	ELECT 470uF 20% 10V
C216	1-163-038-91	s	CERAMIC, CHIP 0.1uF 25V
C217	1-163-038-91	s	CERAMIC, CHIP 0.1uF 25V
C218	1-163-038-91	s	CERAMIC, CHIP 0.1uF 25V
C219	1-126-392-11	s	ELECT, CHIP 100uF 20% 6.3V
C220	1-126-392-11	s	ELECT, CHIP 100uF 20% 6.3V
C221	1-126-392-11	s	ELECT, CHIP 100uF 20% 6.3V
C222	1-163-038-91	s	CERAMIC, CHIP 0.1uF 25V
C223	1-163-038-91	s	CERAMIC, CHIP 0.1uF 25V
C301	1-163-133-00	s	CERAMIC, CHIP 470pF 5% 50V
C302	1-126-394-11	s	ELECT, CHIP 10uF 20% 16V
C303	1-163-033-91	s	CERAMIC, CHIP 0.022uF 50V

(SDI-28 BOARD(DSBK-100/100P))

Ref. No. or Q'ty	Part No.	SP	Description
C304	1-163-033-91	s	CERAMIC, CHIP 0.022uF 50V
C306	1-163-038-91	s	CERAMIC, CHIP 0.1uF 25V
CN28	1-774-376-11	s	CONNECTOR, BB 68P
CN201	1-750-880-11	s	CONNECTOR, MINI COAX, FEMALE
CN202	1-750-880-11	s	CONNECTOR, MINI COAX, FEMALE
CNI301	1-526-950-11	o	SOCKET, IC 64P
D101	8-719-820-41	s	DIODE 1SS302
D201	8-719-404-35	s	DIODE MA141WK
D202	8-719-989-22	s	LED CL-150R-CD, RED
D203	8-719-404-35	s	DIODE MA141WK
E201	1-535-881-21	o	TERMINAL, TP
E301	1-535-881-21	o	TERMINAL, TP
FB201	1-543-813-21	s	CHOKE, NOISE, CHIP
FB202	1-543-813-21	s	CHOKE, NOISE, CHIP
FB203	1-543-813-21	s	CHOKE, NOISE, CHIP
FB204	1-543-813-21	s	CHOKE, NOISE, CHIP
FB205	1-543-813-21	s	CHOKE, NOISE, CHIP
IC101	8-759-272-21	s	IC TC74VHCT541F
IC102	8-759-272-21	s	IC TC74VHCT541F
IC103	8-759-081-44	s	IC TC74VHC04F
IC104	8-759-186-53	s	IC TC74VHC163F(EL)
IC105	8-759-186-53	s	IC TC74VHC163F(EL)
IC106	8-759-186-30	s	IC TC74VHC14F(EL)
IC107	8-759-186-53	s	IC TC74VHC163F(EL)
IC108	8-759-186-53	s	IC TC74VHC163F(EL)
IC109	8-759-186-53	s	IC TC74VHC163F(EL)
IC110	8-759-456-03	s	IC M66256GP-E2
IC111	8-759-186-38	s	IC TC74VHC32F(EL)
IC112	8-759-519-12	s	IC CXD8281Q
IC113	8-759-172-73	s	IC CXD83850
IC114	8-759-271-86	s	IC TC7SH04FU
IC115	8-759-175-27	s	IC TC74VHC574F
IC116	8-759-186-30	s	IC TC74VHC14F(EL)
IC201	8-741-601-11	s	IC SBX1601A
IC202	8-759-510-71	s	IC UPC358G2-E2
IC203	8-759-324-03	s	IC HA17431UA-TL
IC301	8-759-483-67	s	IC UPD78011FCW-026
IC303	8-759-926-80	s	IC SN74HC573NS
IC304	8-759-276-00	s	IC TC7W139FU(TE12R)
L101	1-412-533-21	s	INDUCTOR 47uH
L102	1-412-533-21	s	INDUCTOR 47uH
L103	1-412-533-21	s	INDUCTOR 47uH
L201	1-414-102-11	s	INDUCTOR 0.22uH
Q101	8-729-029-14	s	TRANSISTOR DTC144EUA-T106
Q102	8-729-029-14	s	TRANSISTOR DTC144EUA-T106
Q103	8-729-029-14	s	TRANSISTOR DTC144EUA-T106
Q201	8-729-105-68	s	TRANSISTOR 2SC3356-K
Q202	8-729-105-68	s	TRANSISTOR 2SC3356-K
Q203	8-729-105-68	s	TRANSISTOR 2SC3356-K
Q204	8-729-105-68	s	TRANSISTOR 2SC3356-K
Q205	8-729-105-68	s	TRANSISTOR 2SC3356-K
Q206	8-729-028-91	s	TRANSISTOR DTA144EUA-T106
Q208	8-729-028-91	s	TRANSISTOR DTA144EUA-T106
R101	1-216-025-91	s	METAL, CHIP 100 5% 1/10W
R102	1-216-025-91	s	METAL, CHIP 100 5% 1/10W
R103	1-216-025-91	s	METAL, CHIP 100 5% 1/10W

(SDI-28 BOARD(DSBK-100/100P))

Ref. No. or Q'ty	Part No.	SP	Description
R104	1-216-025-91	s	METAL, CHIP 100 5% 1/10W
R106	1-216-295-91	s	RES, CHIP 0
R107	1-216-025-91	s	METAL, CHIP 100 5% 1/10W
R109	1-216-295-91	s	RES, CHIP 0
R110	1-216-025-91	s	METAL, CHIP 100 5% 1/10W
R111	1-216-295-91	s	RES, CHIP 0
R112	1-216-295-91	s	RES, CHIP 0
R113	1-216-295-91	s	RES, CHIP 0
R114	1-216-295-91	s	RES, CHIP 0
R115	1-216-073-00	s	METAL, CHIP 10k 5% 1/10W
R116	1-216-049-91	s	METAL, CHIP 1k 5% 1/10W
R117	1-216-295-91	s	RES, CHIP 0
R118	1-216-073-00	s	METAL, CHIP 10k 5% 1/10W
R119	1-216-109-00	s	METAL, CHIP 330k 5% 1/10W
R120	1-216-073-00	s	METAL, CHIP 10k 5% 1/10W
R121	1-216-073-00	s	METAL, CHIP 10k 5% 1/10W
R122	1-216-049-91	s	METAL, CHIP 1k 5% 1/10W
R127	1-216-295-91	s	RES, CHIP 0
R128	1-216-295-91	s	RES, CHIP 0
R129	1-216-295-91	s	RES, CHIP 0
R130	1-216-295-91	s	RES, CHIP 0
R132	1-216-049-91	s	METAL, CHIP 1k 5% 1/10W
R134	1-216-295-91	s	RES, CHIP 0
R136	1-216-295-91	s	RES, CHIP 0
R138	1-216-295-91	s	RES, CHIP 0
R140	1-216-295-91	s	RES, CHIP 0
R145	1-216-073-00	s	METAL, CHIP 10k 5% 1/10W
R149	1-216-295-91	s	RES, CHIP 0
R150	1-216-295-91	s	RES, CHIP 0
R151	1-216-049-91	s	METAL, CHIP 1k 5% 1/10W
R152	1-216-097-91	s	METAL, CHIP 100k 5% 1/10W
R153	1-216-073-00	s	METAL, CHIP 10k 5% 1/10W
R154	1-216-097-91	s	METAL, CHIP 100k 5% 1/10W
R155	1-216-073-00	s	METAL, CHIP 10k 5% 1/10W
R156	1-216-097-91	s	METAL, CHIP 100k 5% 1/10W
R158	1-216-073-00	s	METAL, CHIP 10k 5% 1/10W
R159	1-216-295-91	s	RES, CHIP 0
R160	1-216-295-91	s	RES, CHIP 0
R173	1-216-295-91	s	RES, CHIP 0
R174	1-216-295-91	s	RES, CHIP 0
R175	1-216-295-91	s	RES, CHIP 0
R176	1-216-295-91	s	RES, CHIP 0
R177	1-216-295-91	s	RES, CHIP 0
R178	1-216-295-91	s	RES, CHIP 0
R179	1-216-025-91	s	METAL, CHIP 100 5% 1/10W
R180	1-216-029-00	s	METAL, CHIP 150 5% 1/10W
R181	1-216-025-91	s	METAL, CHIP 100 5% 1/10W
R182	1-216-017-91	s	METAL, CHIP 47 5% 1/10W
R183	1-216-017-91	s	METAL, CHIP 47 5% 1/10W
R201	1-216-085-00	s	METAL, CHIP 33k 5% 1/10W
R202	1-216-079-00	s	METAL, CHIP 18k 5% 1/10W
R203	1-216-033-00	s	METAL, CHIP 220 5% 1/10W
R204	1-216-033-00	s	METAL, CHIP 220 5% 1/10W
R205	1-216-033-00	s	METAL, CHIP 220 5% 1/10W
R206	1-216-033-00	s	METAL, CHIP 220 5% 1/10W
R207	1-216-033-00	s	METAL, CHIP 220 5% 1/10W
R208	1-216-033-00	s	METAL, CHIP 220 5% 1/10W
R209	1-216-033-00	s	METAL, CHIP 220 5% 1/10W
R210	1-216-033-00	s	METAL, CHIP 220 5% 1/10W

(SDI-28 BOARD(DSBK-100/100P))

Ref. No. or Q'ty	Part No.	SP	Description
R211	1-216-033-00	s	METAL, CHIP 220 5% 1/10W
R212	1-216-033-00	s	METAL, CHIP 220 5% 1/10W
R213	1-216-025-91	s	METAL, CHIP 100 5% 1/10W
R214	1-216-085-00	s	METAL, CHIP 33k 5% 1/10W
R215	1-216-079-00	s	METAL, CHIP 18k 5% 1/10W
R216	1-216-049-91	s	METAL, CHIP 1k 5% 1/10W
R217	1-216-073-00	s	METAL, CHIP 10k 5% 1/10W
R218	1-216-033-00	s	METAL, CHIP 220 5% 1/10W
R219	1-216-624-11	s	METAL, CHIP 75 0.5% 1/10W
R220	1-216-033-00	s	METAL, CHIP 220 5% 1/10W
R221	1-216-623-11	s	METAL, CHIP 68 0.5% 1/10W
R222	1-216-611-11	s	METAL, CHIP 22 0.5% 1/10W
R224	1-216-623-11	s	METAL, CHIP 68 0.5% 1/10W
R225	1-216-611-11	s	METAL, CHIP 22 0.5% 1/10W
R226	1-216-624-11	s	METAL, CHIP 75 0.5% 1/10W
R228	1-216-295-91	s	RES, CHIP 0
R229	1-216-029-00	s	METAL, CHIP 150 5% 1/10W
R230	1-216-029-00	s	METAL, CHIP 150 5% 1/10W
R231	1-216-625-11	s	METAL, CHIP 82 0.5% 1/10W
R232	1-216-625-11	s	METAL, CHIP 82 0.5% 1/10W
R233	1-216-623-11	s	METAL, CHIP 68 0.5% 1/10W
R234	1-216-623-11	s	METAL, CHIP 68 0.5% 1/10W
R235	1-216-073-00	s	METAL, CHIP 10k 5% 1/10W
R236	1-216-073-00	s	METAL, CHIP 10k 5% 1/10W
R237	1-216-033-00	s	METAL, CHIP 220 5% 1/10W
R238	1-216-295-91	s	RES, CHIP 0
R239	1-216-627-11	s	METAL, CHIP 100 0.5% 1/10W
R241	1-216-663-11	s	METAL, CHIP 3.3k 0.5% 1/10W
R242	1-216-295-91	s	RES, CHIP 0
R243	1-216-295-91	s	RES, CHIP 0
R244	1-216-685-11	s	METAL, CHIP 27k 0.5% 1/10W
R247	1-216-651-11	s	METAL, CHIP 1k 0.5% 1/10W
R248	1-216-675-11	s	METAL, CHIP 10k 0.5% 1/10W
R249	1-216-653-11	s	METAL, CHIP 1.2k 0.5% 1/10W
R250	1-216-651-11	s	METAL, CHIP 1k 0.5% 1/10W
R253	1-216-295-91	s	RES, CHIP 0
R254	1-216-295-91	s	RES, CHIP 0
R255	1-216-037-00	s	METAL, CHIP 330 5% 1/10W
R256	1-216-295-91	s	RES, CHIP 0
R301	1-216-089-91	s	METAL, CHIP 47k 5% 1/10W
R302	1-216-089-91	s	METAL, CHIP 47k 5% 1/10W
R303	1-216-109-00	s	METAL, CHIP 330k 5% 1/10W
R304	1-216-089-91	s	METAL, CHIP 47k 5% 1/10W
R305	1-216-049-91	s	METAL, CHIP 1k 5% 1/10W
R306	1-216-049-91	s	METAL, CHIP 1k 5% 1/10W
R307	1-216-025-91	s	METAL, CHIP 100 5% 1/10W
R308	1-216-025-91	s	METAL, CHIP 100 5% 1/10W
R309	1-216-025-91	s	METAL, CHIP 100 5% 1/10W
R310	1-216-295-91	s	RES, CHIP 0
R311	1-216-049-91	s	METAL, CHIP 1k 5% 1/10W
R312	1-216-073-00	s	METAL, CHIP 10k 5% 1/10W
R319	1-216-073-00	s	METAL, CHIP 10k 5% 1/10W
R320	1-216-089-91	s	METAL, CHIP 47k 5% 1/10W
R321	1-216-089-91	s	METAL, CHIP 47k 5% 1/10W
RB101	1-239-998-11	s	RESISTOR BLOCK, CHIP 100 x 4
RB102	1-239-998-11	s	RESISTOR BLOCK, CHIP 100 x 4
RB103	1-239-998-11	s	RESISTOR BLOCK, CHIP 100 x 4
RB104	1-239-309-11	s	RESISTOR BLOCK, CHIP 100k x 8
RB105	1-239-309-11	s	RESISTOR BLOCK, CHIP 100k x 8

(SDI-28 BOARD(DSBK-100/100P))

Ref. No. or Q'ty	Part No.	SP	Description
RB106	1-239-412-11	s	RESISTOR BLOCK, CHIP 100 x 4
RB107	1-239-412-11	s	RESISTOR BLOCK, CHIP 100 x 4
RB108	1-239-412-11	s	RESISTOR BLOCK, CHIP 100 x 4
RV201	1-241-262-11	s	RES, ADJ, METAL 2k
X301	1-579-175-11	s	RESONATOR, CERAMIC 10.00MHz

SE-315 BOARD

Ref. No. or Q'ty	Part No.	SP	Description
1pc	1-662-914-11	o	PRINTED CIRCUIT BOARD, SE-315
CN61	1-566-759-11	o	CONNECTOR 4P, MALE
IC1	8-749-012-50	s	IC HEDR-8000
R1	1-216-033-00	s	METAL, CHIP 220 5% 1/10W

SE-361 BOARD

Ref. No. or Q'ty	Part No.	SP	Description
1pc	1-662-915-11	o	PRINTED CIRCUIT BOARD, SE-361
CN61	1-566-759-11	o	CONNECTOR 4P, MALE
IC1	8-749-012-50	s	IC HEDR-8000
R1	1-216-033-00	s	METAL, CHIP 220 5% 1/10W

SV-184 BOARD; Suffix -14

Ref. No. or Q'ty	Part No.	SP	Description

This list corresponds to the board suffix number -14.

The parts marked * are different, depending on the product serial numbers, as shown below:

*1) Serial number; 10001 through 10620 (For DSR-60 J)
Serial number; 10001 through 10540 (For DSR-60 UC)
Serial number; 10001 through 10800 (For DSR-60P CE)

*2) Serial number; 10621 and higher (For DSR-60 J)
Serial number; 10541 and higher (For DSR-60 UC)
Serial number; 10801 and higher (For DSR-60P CE)

*3) Serial number; 10001 through 10620 (For DSR-60 J)
Serial number; 10001 through 10540 (For DSR-60 UC)
Serial number; 10001 through 11100 (For DSR-60P CE)

*4) Serial number; 10621 and higher (For DSR-60 J)
Serial number; 10541 and higher (For DSR-60 UC)
Serial number; 11101 and higher (For DSR-60P CE)

Ref. No. or Q'ty	Part No.	SP	Description
1pc	A-8312-944-A	s	MOUNTED CIRCUIT BOARD, SV-184
1pc	7-621-759-45	s	+PSW, 2.6x6
1pc	3-179-084-01	s	LEVER (R), PRINTED CIRCUIT BOARD
1pc	3-179-085-01	s	LEVER (L), PRINTED CIRCUIT BOARD
13pcs	7-621-759-65	s	+PSW, 2.6x8
1pc	1-528-749-11	s	BATTERY, LITHIUM
1pc	7-621-759-65	s	+PSW, 2.6x8
C1	1-107-909-11	s	ELECT 47uF 20% 16V
C4	1-163-809-11	s	CERAMIC, CHIP 0.047uF 10% 25V
C5	1-135-076-21	s	TANTALUM, CHIP 1uF 10% 35V
C6	1-163-275-11	s	CERAMIC, CHIP 0.001uF 5% 50V
C9	1-135-076-21	s	TANTALUM, CHIP 1uF 10% 35V
C12	1-163-037-11	s	CERAMIC, CHIP 0.022uF 10% 25V
C13	1-163-133-00	s	CERAMIC, CHIP 470pF 5% 50V
C14	1-163-037-11	s	CERAMIC, CHIP 0.022uF 10% 25V
C15	1-163-037-11	s	CERAMIC, CHIP 0.022uF 10% 25V
C16	1-163-038-91	s	CERAMIC, CHIP 0.1uF 25V
C17	1-163-091-00	s	CERAMIC, CHIP 8pF 50V
C18	1-163-091-00	s	CERAMIC, CHIP 8pF 50V
C19	1-163-275-11	s	CERAMIC, CHIP 0.001uF 5% 50V
C20	1-163-275-11	s	CERAMIC, CHIP 0.001uF 5% 50V
C21	1-163-038-91	s	CERAMIC, CHIP 0.1uF 25V
C22	1-163-038-91	s	CERAMIC, CHIP 0.1uF 25V
C23	1-163-038-91	s	CERAMIC, CHIP 0.1uF 25V
C24	1-163-038-91	s	CERAMIC, CHIP 0.1uF 25V
C25	1-163-038-91	s	CERAMIC, CHIP 0.1uF 25V
C26	1-163-038-91	s	CERAMIC, CHIP 0.1uF 25V
C27	1-163-038-91	s	CERAMIC, CHIP 0.1uF 25V
C28	1-163-038-91	s	CERAMIC, CHIP 0.1uF 25V
C29	1-163-038-91	s	CERAMIC, CHIP 0.1uF 25V
C30	1-163-038-91	s	CERAMIC, CHIP 0.1uF 25V
C31	1-163-038-91	s	CERAMIC, CHIP 0.1uF 25V
C32	1-163-038-91	s	CERAMIC, CHIP 0.1uF 25V
C33	1-163-038-91	s	CERAMIC, CHIP 0.1uF 25V
C34	1-163-038-91	s	CERAMIC, CHIP 0.1uF 25V
C35	1-163-038-91	s	CERAMIC, CHIP 0.1uF 25V
C36	1-163-038-91	s	CERAMIC, CHIP 0.1uF 25V
C37	1-163-038-91	s	CERAMIC, CHIP 0.1uF 25V
C38	1-163-038-91	s	CERAMIC, CHIP 0.1uF 25V
C39	1-163-038-91	s	CERAMIC, CHIP 0.1uF 25V
C40	1-163-038-91	s	CERAMIC, CHIP 0.1uF 25V
C41	1-163-038-91	s	CERAMIC, CHIP 0.1uF 25V
C42	1-163-038-91	s	CERAMIC, CHIP 0.1uF 25V

(SV-184 BOARD; Suffix -14)

Ref. No. or Q'ty	Part No.	SP	Description
C101	1-163-038-91	s	CERAMIC, CHIP 0.1uF 25V
C102	1-163-227-11	s	CERAMIC, CHIP 10pF 5% 50V
C103	1-163-227-11	s	CERAMIC, CHIP 10pF 5% 50V
C104	1-163-037-11	s	CERAMIC, CHIP 0.022uF 10% 25V
C105	1-163-037-11	s	CERAMIC, CHIP 0.022uF 10% 25V
C106	1-164-695-11	s	CERAMIC 0.0022uF 5% 50V
C107	1-163-037-11	s	CERAMIC, CHIP 0.022uF 10% 25V
C108	1-163-037-11	s	CERAMIC, CHIP 0.022uF 10% 25V
C109	1-163-038-91	s	CERAMIC, CHIP 0.1uF 25V
C110	1-163-038-91	s	CERAMIC, CHIP 0.1uF 25V
C111	1-163-038-91	s	CERAMIC, CHIP 0.1uF 25V
C112	1-163-038-91	s	CERAMIC, CHIP 0.1uF 25V
C114	1-163-038-91	s	CERAMIC, CHIP 0.1uF 25V
C115	1-163-038-91	s	CERAMIC, CHIP 0.1uF 25V
C116	1-163-038-91	s	CERAMIC, CHIP 0.1uF 25V
C119	1-163-259-91	s	CERAMIC, CHIP 220pF 5% 50V
C120	1-163-259-91	s	CERAMIC, CHIP 220pF 5% 50V
C121	1-163-259-91	s	CERAMIC, CHIP 220pF 5% 50V
C122	1-163-259-91	s	CERAMIC, CHIP 220pF 5% 50V
C201	1-163-275-11	s	CERAMIC, CHIP 0.001uF 5% 50V
C202	1-163-275-11	s	CERAMIC, CHIP 0.001uF 5% 50V
C205	1-163-275-11	s	CERAMIC, CHIP 0.001uF 5% 50V
C206	1-163-275-11	s	CERAMIC, CHIP 0.001uF 5% 50V
C207	1-163-275-11	s	CERAMIC, CHIP 0.001uF 5% 50V
C208	1-163-275-11	s	CERAMIC, CHIP 0.001uF 5% 50V
C209	1-163-275-11	s	CERAMIC, CHIP 0.001uF 5% 50V
C210	1-163-275-11	s	CERAMIC, CHIP 0.001uF 5% 50V
C212	1-163-133-00	s	CERAMIC, CHIP 470pF 5% 50V
C213	1-163-224-11	s	CERAMIC, CHIP 7pF 0.25pF 50V
C214	1-163-224-11	s	CERAMIC, CHIP 7pF 0.25pF 50V
C216	1-163-038-91	s	CERAMIC, CHIP 0.1uF 25V
C217	1-107-909-11	s	ELECT 47uF 20% 16V
C218	1-107-909-11	s	ELECT 47uF 20% 16V
C219	1-163-037-11	s	CERAMIC, CHIP 0.022uF 10% 25V
C220	1-163-021-91	s	CERAMIC, CHIP 0.01uF 10% 50V
C221	1-163-021-91	s	CERAMIC, CHIP 0.01uF 10% 50V
C222	1-163-275-11	s	CERAMIC, CHIP 0.001uF 5% 50V
C223	1-163-275-11	s	CERAMIC, CHIP 0.001uF 5% 50V
C225	1-163-021-91	s	CERAMIC, CHIP 0.01uF 10% 50V
C226	1-163-275-11	s	CERAMIC, CHIP 0.001uF 5% 50V
C227	1-163-038-91	s	CERAMIC, CHIP 0.1uF 25V
C228	1-163-038-91	s	CERAMIC, CHIP 0.1uF 25V
C229	1-163-038-91	s	CERAMIC, CHIP 0.1uF 25V
C230	1-163-038-91	s	CERAMIC, CHIP 0.1uF 25V
C231	1-163-038-91	s	CERAMIC, CHIP 0.1uF 25V
C232	1-163-038-91	s	CERAMIC, CHIP 0.1uF 25V
C233	1-163-038-91	s	CERAMIC, CHIP 0.1uF 25V
C234	1-163-038-91	s	CERAMIC, CHIP 0.1uF 25V
C235	1-163-038-91	s	CERAMIC, CHIP 0.1uF 25V
C236	1-163-037-11	s	CERAMIC, CHIP 0.022uF 10% 25V
C307	1-163-038-91	s	CERAMIC, CHIP 0.1uF 25V
C313	1-163-038-91	s	CERAMIC, CHIP 0.1uF 25V
C314	1-163-275-11	s	CERAMIC, CHIP 0.001uF 5% 50V
C315	1-163-275-11	s	CERAMIC, CHIP 0.001uF 5% 50V
C316	1-163-275-11	s	CERAMIC, CHIP 0.001uF 5% 50V
C317	1-163-809-11	s	CERAMIC, CHIP 0.047uF 10% 25V
C318	1-163-275-11	s	CERAMIC, CHIP 0.001uF 5% 50V
C319	1-163-275-11	s	CERAMIC, CHIP 0.001uF 5% 50V
C320	1-163-021-91	s	CERAMIC, CHIP 0.01uF 10% 50V

(SV-184 BOARD; Suffix -14)

Ref. No. or Q'ty	Part No.	SP	Description
C321	1-163-021-91	s	CERAMIC, CHIP 0.01uF 10% 50V
C322	1-130-489-00	s	MYLAR 0.033uF 5% 50V
C323	1-163-037-11	s	CERAMIC, CHIP 0.022uF 10% 25V
C324	1-164-695-11	s	CERAMIC, CHIP 0.0022uF 5% 50V
C325	1-163-243-11	s	CERAMIC, CHIP 47pF 5% 50V
C326	1-163-038-91	s	CERAMIC, CHIP 0.1uF 25V
C327	1-163-038-91	s	CERAMIC, CHIP 0.1uF 25V
C328	1-163-243-11	s	CERAMIC, CHIP 47pF 5% 50V
C329	1-164-695-11	s	CERAMIC, CHIP 0.0022uF 5% 50V
C330	1-164-695-11	s	CERAMIC, CHIP 0.0022uF 5% 50V
C331	1-163-037-11	s	CERAMIC, CHIP 0.022uF 10% 25V
C332	1-163-037-11	s	CERAMIC, CHIP 0.022uF 10% 25V
C333	1-163-251-11	s	CERAMIC, CHIP 100pF 5% 50V
C334	1-163-251-11	s	CERAMIC, CHIP 100pF 5% 50V
C335	1-163-037-11	s	CERAMIC, CHIP 0.022uF 10% 25V
C336	1-163-037-11	s	CERAMIC, CHIP 0.022uF 10% 25V
C337	1-107-907-11	s	ELECT 22uF 20% 25V
C338	1-107-907-11	s	ELECT 22uF 20% 25V
C339	1-107-907-11	s	ELECT 22uF 20% 25V
C340	1-107-907-11	s	ELECT 22uF 20% 25V
C341	1-107-907-11	s	ELECT 22uF 20% 25V
C342	1-107-907-11	s	ELECT 22uF 20% 25V
C343	1-107-907-11	s	ELECT 22uF 20% 25V
C344	1-107-907-11	s	ELECT 22uF 20% 25V
C345	1-130-489-00	s	MYLAR 0.033uF 5% 50V
C346	1-130-489-00	s	MYLAR 0.033uF 5% 50V
C347	1-130-489-00	s	MYLAR 0.033uF 5% 50V
C348	1-130-489-00	s	MYLAR 0.033uF 5% 50V
C349	1-163-021-91	s	CERAMIC, CHIP 0.01uF 10% 50V
C350	1-163-021-91	s	CERAMIC, CHIP 0.01uF 10% 50V
C351	1-163-021-91	s	CERAMIC, CHIP 0.01uF 10% 50V
C352	1-163-021-91	s	CERAMIC, CHIP 0.01uF 10% 50V
C353	1-163-038-91	s	CERAMIC, CHIP 0.1uF 25V
C354	1-163-038-91	s	CERAMIC, CHIP 0.1uF 25V
C355	1-163-243-11	s	CERAMIC, CHIP 47pF 5% 50V
C356	1-163-243-11	s	CERAMIC, CHIP 47pF 5% 50V
C357	1-163-243-11	s	CERAMIC, CHIP 47pF 5% 50V
C358	1-163-243-11	s	CERAMIC, CHIP 47pF 5% 50V
C359	1-163-243-11	s	CERAMIC, CHIP 47pF 5% 50V
C360	1-163-243-11	s	CERAMIC, CHIP 47pF 5% 50V
C361	1-163-243-11	s	CERAMIC, CHIP 47pF 5% 50V
C362	1-163-243-11	s	CERAMIC, CHIP 47pF 5% 50V
C363	1-163-038-91	s	CERAMIC, CHIP 0.1uF 25V
C364	1-163-038-91	s	CERAMIC, CHIP 0.1uF 25V
C365	1-163-243-11	s	CERAMIC, CHIP 47pF 5% 50V
C366	1-163-243-11	s	CERAMIC, CHIP 47pF 5% 50V
C367	1-163-243-11	s	CERAMIC, CHIP 47pF 5% 50V
C368	1-163-243-11	s	CERAMIC, CHIP 47pF 5% 50V
C369	1-163-038-91	s	CERAMIC, CHIP 0.1uF 25V
C370	1-163-037-11	s	CERAMIC, CHIP 0.022uF 10% 25V
C371	1-163-037-11	s	CERAMIC, CHIP 0.022uF 10% 25V
C372	1-107-906-11	s	ELECT 10uF 20% 50V
C373	1-107-906-11	s	ELECT 10uF 20% 50V
C374	1-163-133-00	s	CERAMIC, CHIP 470pF 5% 50V
C375	1-163-133-00	s	CERAMIC, CHIP 470pF 5% 50V
C376	1-163-038-91	s	CERAMIC, CHIP 0.1uF 25V
C377	1-107-906-11	s	ELECT 10uF 20% 50V
C378	1-107-906-11	s	ELECT 10uF 20% 50V
C379	1-107-906-11	s	ELECT 10uF 20% 50V

(SV-184 BOARD; Suffix -14)

Ref. No. or Q'ty	Part No.	SP	Description
C380	1-163-021-91	s	CERAMIC, CHIP 0.01uF 10% 50V
C381	1-163-038-91	s	CERAMIC, CHIP 0.1uF 25V
C382	1-128-526-11	s	ELECT 100uF 20% 16V
C383	1-163-038-91	s	CERAMIC, CHIP 0.1uF 25V
C384	1-163-038-91	s	CERAMIC, CHIP 0.1uF 25V
C385	1-163-038-91	s	CERAMIC, CHIP 0.1uF 25V
C386	1-163-038-91	s	CERAMIC, CHIP 0.1uF 25V
C387	1-163-038-91	s	CERAMIC, CHIP 0.1uF 25V
C388	1-163-038-91	s	CERAMIC, CHIP 0.1uF 25V
C392	1-163-038-91	s	CERAMIC, CHIP 0.1uF 25V
C397	1-163-038-91	s	CERAMIC, CHIP 0.1uF 25V
C398	1-163-038-91	s	CERAMIC, CHIP 0.1uF 25V
C399	1-163-038-91	s	CERAMIC, CHIP 0.1uF 25V
C400	1-163-038-91	s	CERAMIC, CHIP 0.1uF 25V
C401	1-163-038-91	s	CERAMIC, CHIP 0.1uF 25V
C402	1-163-038-91	s	CERAMIC, CHIP 0.1uF 25V
C403	1-163-038-91	s	CERAMIC, CHIP 0.1uF 25V
C404	1-163-038-91	s	CERAMIC, CHIP 0.1uF 25V
C405	1-163-038-91	s	CERAMIC, CHIP 0.1uF 25V
C406	1-163-038-91	s	CERAMIC, CHIP 0.1uF 25V
C407	1-163-038-91	s	CERAMIC, CHIP 0.1uF 25V
C408	1-107-909-11	s	ELECT 47uF 20% 16V
C409	1-128-526-11	s	ELECT 100uF 20% 16V
C410	1-107-909-11	s	ELECT 47uF 20% 16V
C411	1-163-038-91	s	CERAMIC, CHIP 0.1uF 25V
C412	1-163-038-91	s	CERAMIC, CHIP 0.1uF 25V
C413	1-163-038-91	s	CERAMIC, CHIP 0.1uF 25V
C414	1-163-038-91	s	CERAMIC, CHIP 0.1uF 25V
C415	1-163-038-91	s	CERAMIC, CHIP 0.1uF 25V
C416	1-163-038-91	s	CERAMIC, CHIP 0.1uF 25V
C417	1-128-526-11	s	ELECT 100uF 20% 16V
C418	1-128-526-11	s	ELECT 100uF 20% 16V
C419	1-128-526-11	s	ELECT 100uF 20% 16V
C420	1-163-038-91	s	CERAMIC, CHIP 0.1uF 25V
C421	1-163-038-91	s	CERAMIC, CHIP 0.1uF 25V
C422	1-163-038-91	s	CERAMIC, CHIP 0.1uF 25V
C423	1-163-038-91	s	CERAMIC, CHIP 0.1uF 25V
C424	1-163-038-91	s	CERAMIC, CHIP 0.1uF 25V
C425	1-107-909-11	s	ELECT 47uF 20% 16V
C426	1-163-251-11	s	CERAMIC, CHIP 100pF 5% 50V
C427	1-163-251-11	s	CERAMIC, CHIP 100pF 5% 50V
C437	1-163-251-11	s	CERAMIC, CHIP 100pF 5% 50V
C438	1-163-251-11	s	CERAMIC, CHIP 100pF 5% 50V
C439	1-104-760-11	s	CERAMIC, CHIP 0.047uF 10% 50V
C441	1-163-038-91	s	CERAMIC, CHIP 0.1uF 25V
C442	1-163-038-91	s	CERAMIC, CHIP 0.1uF 25V
C443	1-163-038-91	s	CERAMIC, CHIP 0.1uF 25V
C444	1-163-038-91	s	CERAMIC, CHIP 0.1uF 25V
C445	1-163-038-91	s	CERAMIC, CHIP 0.1uF 25V
CN1	1-506-484-11	s	CONNECTOR 5P, MALE
CN2	1-506-481-11	s	CONNECTOR 2P, MALE
CN3	1-506-485-11	s	CONNECTOR 6P, MALE *3)
CNI5	1-526-660-21	o	SOCKET, IC 32P
CNI6	1-526-660-21	o	SOCKET, IC 32P
D1	8-719-941-86	s	DIODE DAN202U
D2	8-719-941-09	s	DIODE DAP202U
D3	8-719-941-86	s	DIODE DAN202U
D4	8-719-941-09	s	DIODE DAP202U

(SV-184 BOARD; Suffix -14)

Ref. No. or Q'ty	Part No.	SP	Description
D5	8-719-941-86	s	DIODE DAN202U
D6	8-719-941-09	s	DIODE DAP202U
D7	8-719-941-86	s	DIODE DAN202U
D8	8-719-941-09	s	DIODE DAP202U
D13	8-719-941-86	s	DIODE DAN202U
D14	8-719-941-09	s	DIODE DAP202U
D15	8-719-941-23	s	DIODE DA204U
D201	8-719-941-86	s	DIODE DAN202U
D202	8-719-941-09	s	DIODE DAP202U
D205	8-719-941-86	s	DIODE DAN202U
D206	8-719-941-09	s	DIODE DAP202U
D207	8-719-941-86	s	DIODE DAN202U
D208	8-719-941-09	s	DIODE DAP202U
D209	8-719-941-86	s	DIODE DAN202U
D210	8-719-941-09	s	DIODE DAP202U
D303	8-719-800-76	s	DIODE 1SS226
D304	8-719-800-76	s	DIODE 1SS226
D305	8-719-200-02	s	DIODE 10E-2
D306	8-719-200-02	s	DIODE 10E-2
D307	8-719-200-02	s	DIODE 10E-2
D308	8-719-200-02	s	DIODE 10E-2
D309	8-719-200-02	s	DIODE 10E-2
D310	8-719-200-02	s	DIODE 10E-2
D311	8-719-800-76	s	DIODE 1SS226
E1	1-535-881-21	o	TERMINAL, TP
E2	1-535-881-21	o	TERMINAL, TP
E3	1-535-881-21	o	TERMINAL, TP
FB301	1-414-581-21	s	FILTER, NOISE, CHIP
FL1	1-233-674-21	s	FILTER BLOCK, NOISE, CHIP
FL2	1-233-674-21	s	FILTER BLOCK, NOISE, CHIP
FL3	1-233-674-21	s	FILTER BLOCK, NOISE, CHIP
FL4	1-233-314-11	s	FILTER, NOISE, CHIP
FL5	1-233-314-11	s	FILTER, NOISE, CHIP
IC1	8-759-348-69	s	IC HD6415108RF10
IC2	8-759-254-78	s	IC CY7C185-25VC
IC3	8-759-254-78	s	IC CY7C185-25VC
IC4	8-759-399-65	s	IC M48Z58Y-70MH1TR
IC5	8-759-539-81	o	IC M27C1001-10F1-80SV5-V1.33
IC6	8-759-539-82	o	IC M27C1001-10F1-80SV6-V1.33
IC7	8-759-185-69	s	IC TC74VHC27F(EL)
IC8	8-759-186-29	s	IC TC74VHC11F
IC9	8-759-186-47	s	IC TC74VHC138F(EL)
IC10	8-759-186-47	s	IC TC74VHC138F(EL)
IC11	8-759-186-32	s	IC TC74VHC21F
IC12	8-759-081-42	s	IC TC74VHC00F
IC13	8-759-186-38	s	IC TC74VHC32F(EL)
IC14	8-759-925-76	s	IC SN74HC08NS
IC15	8-759-081-44	s	IC TC74VHC04F
IC16	8-759-369-92	s	IC M51958AFP600D
IC17	8-759-009-05	s	IC MC14051BF
IC18	8-759-186-63	s	IC TC74VHC245F(EL)
IC19	8-759-186-63	s	IC TC74VHC245F(EL)
IC21	8-759-510-71	s	IC UPC358G2-E2
IC23	8-759-186-63	s	IC TC74VHC245F(EL)
IC101	8-752-343-05	s	IC CXD2202Q
IC102	8-759-700-07	s	IC NJM2903M
IC103	8-759-927-12	s	IC SN74HCT244ANS
IC104	8-759-925-76	s	IC SN74HC08NS

(SV-184 BOARD; Suffix -14)

Ref. No. or Q'ty	Part No.	SP	Description
IC105	8-759-100-95	s	IC UPC324G2
IC106	8-759-175-56	s	IC CXD8804Q
IC107	8-759-053-58	s	IC IDT6116SA25SO
IC201	8-752-892-26	s	IC CXP912P032Q-3-027
IC202	8-759-186-77	s	IC TC74VHC541F
IC203	8-759-186-77	s	IC TC74VHC541F
IC204	8-759-186-77	s	IC TC74VHC541F
IC205	8-759-186-77	s	IC TC74VHC541F
IC206	8-759-927-12	s	IC SN74HCT244ANS
IC207	8-759-100-95	s	IC UPC324G2
IC208	8-759-600-34	s	IC M54532P
IC209	8-759-009-07	s	IC MC14053BF
IC210	8-759-368-51	s	IC M54523FP
IC302	8-759-106-02	s	IC UPC4570G2
IC303	8-759-700-07	s	IC NJM2903M
IC304	8-759-141-05	s	IC UPC4574G2
IC306	8-759-009-07	s	IC MC14053BF
IC308	8-759-106-02	s	IC UPC4570G2
IC309	8-759-239-23	s	IC SN74HC86NS
IC310	8-759-055-82	s	IC M62353GP
IC311	8-759-100-95	s	IC UPC324G2
IC312	8-759-141-05	s	IC UPC4574G2
IC313	8-759-141-05	s	IC UPC4574G2
IC314	8-759-141-05	s	IC UPC4574G2
IC315	8-759-700-07	s	IC NJM2903M
IC316	8-759-106-02	s	IC UPC4570G2
IC317	8-759-106-02	s	IC UPC4570G2
IC318	8-759-182-84	s	IC PQ05SZ5U
IC319	8-759-205-56	s	IC TA7267P
IC320	8-759-205-56	s	IC TA7267P
IC321	8-759-205-56	s	IC TA7267P
IC323	8-759-106-02	s	IC UPC4570G2
IC324	8-759-100-95	s	IC UPC324G2
L302	1-412-533-21	s	INDUCTOR 47uH
L303	1-412-533-21	s	INDUCTOR 47uH
L304	1-412-533-21	s	INDUCTOR 47uH
L305	1-412-533-21	s	INDUCTOR 47uH
PS302	⚠ 1-532-679-00	s	LINK, IC 0.6A
PS303	⚠ 1-532-679-00	s	LINK, IC 0.6A
PS304	⚠ 1-532-679-00	s	LINK, IC 0.6A
PS305	⚠ 1-532-679-00	s	LINK, IC 0.6A
PS306	⚠ 1-532-675-21	s	LINK, IC 1.5A
PS307	⚠ 1-532-679-00	s	LINK, IC 0.6A
PS308	⚠ 1-532-675-21	s	LINK, IC 1.5A
PS309	⚠ 1-532-675-21	s	LINK, IC 1.5A
PS310	⚠ 1-532-675-21	s	LINK, IC 1.5A
PS311	⚠ 1-532-675-21	s	LINK, IC 1.5A
Q1	8-729-216-22	s	TRANSISTOR 2SA1162
Q2	8-729-028-91	s	TRANSISTOR DTA144EUA-T106
Q3	8-729-028-91	s	TRANSISTOR DTA144EUA-T106
Q201	8-729-120-28	s	TRANSISTOR 2SC1623-L5L6
Q202	8-729-120-28	s	TRANSISTOR 2SC1623-L5L6
Q203	8-729-120-28	s	TRANSISTOR 2SC1623-L5L6
Q204	8-729-216-22	s	TRANSISTOR 2SA1162
Q205	8-729-120-28	s	TRANSISTOR 2SC1623-L5L6
Q301	8-729-029-14	s	TRANSISTOR DTC144EUA-T106
Q302	8-729-265-52	s	TRANSISTOR 2SC2655-Y
Q303	8-729-021-83	s	TRANSISTOR 2SA1020-Y

(SV-184 BOARD; Suffix -14)

Ref. No. or Q'ty	Part No.	SP	Description
Q304	8-729-400-12	s	TRANSISTOR 2SB941-P
Q305	8-729-209-06	s	TRANSISTOR 2SC4213A-TE85L
Q306	8-729-209-06	s	TRANSISTOR 2SC4213A-TE85L
Q307	8-729-265-52	s	TRANSISTOR 2SC2655-Y
Q308	8-729-021-83	s	TRANSISTOR 2SA1020-Y
Q309	8-729-265-52	s	TRANSISTOR 2SC2655-Y
Q310	8-729-021-83	s	TRANSISTOR 2SA1020-Y
Q311	8-729-112-61	s	TRANSISTOR 2SA1441
Q312	8-729-141-18	s	TRANSISTOR 2SC3692
Q313	8-729-102-14	s	TRANSISTOR 2SD1021-F
Q314	8-729-205-02	s	TRANSISTOR 2SA1150-Y
Q315	8-729-112-61	s	TRANSISTOR 2SA1441
Q316	8-729-141-18	s	TRANSISTOR 2SC3692
Q317	8-729-102-14	s	TRANSISTOR 2SD1021-F
Q318	8-729-205-02	s	TRANSISTOR 2SA1150-Y
Q319	8-729-112-61	s	TRANSISTOR 2SA1441
Q320	8-729-141-18	s	TRANSISTOR 2SC3692
Q321	8-729-112-61	s	TRANSISTOR 2SA1441
Q322	8-729-141-18	s	TRANSISTOR 2SC3692
Q323	8-729-265-52	s	TRANSISTOR 2SC2655-Y
Q324	8-729-141-83	s	TRANSISTOR 2SB1094-LK
Q325	8-729-265-52	s	TRANSISTOR 2SC2655-Y
Q326	8-729-400-12	s	TRANSISTOR 2SB941-P
Q327	8-729-021-83	s	TRANSISTOR 2SA1020-Y
Q328	8-729-029-14	s	TRANSISTOR DTC144EUA-T106
Q329	8-729-029-14	s	TRANSISTOR DTC144EUA-T106
R1	1-216-089-91	s	METAL, CHIP 47k 5% 1/10W
R3	1-216-675-11	s	METAL, CHIP 10k 0.5% 1/10W
R5	1-216-675-11	s	METAL, CHIP 10k 0.5% 1/10W
R6	1-216-683-11	s	METAL, CHIP 22k 0.5% 1/10W
R7	1-216-675-11	s	METAL, CHIP 10k 0.5% 1/10W
R8	1-216-687-11	s	METAL, CHIP 33k 0.5% 1/10W
R9	1-216-699-11	s	METAL, CHIP 100k 0.5% 1/10W
R10	1-216-699-11	s	METAL, CHIP 100k 0.5% 1/10W
R11	1-216-089-91	s	METAL, CHIP 47k 5% 1/10W
R12	1-216-025-91	s	METAL, CHIP 100 5% 1/10W
R13	1-216-025-91	s	METAL, CHIP 100 5% 1/10W
R17	1-216-683-11	s	METAL, CHIP 22k 0.5% 1/10W
R18	1-218-764-11	s	METAL, CHIP 330k 0.5% 1/10W
R19	1-216-073-00	s	METAL, CHIP 10k 5% 1/10W
R20	1-216-073-00	s	METAL, CHIP 10k 5% 1/10W
R21	1-216-073-00	s	METAL, CHIP 10k 5% 1/10W
R22	1-216-073-00	s	METAL, CHIP 10k 5% 1/10W
R23	1-216-073-00	s	METAL, CHIP 10k 5% 1/10W
R24	1-216-073-00	s	METAL, CHIP 10k 5% 1/10W
R25	1-216-073-00	s	METAL, CHIP 10k 5% 1/10W
R26	1-216-073-00	s	METAL, CHIP 10k 5% 1/10W
R29	1-216-089-91	s	METAL, CHIP 47k 5% 1/10W
R31	1-216-073-00	s	METAL, CHIP 10k 5% 1/10W
R32	1-216-073-00	s	METAL, CHIP 10k 5% 1/10W
R33	1-216-073-00	s	METAL, CHIP 10k 5% 1/10W
R37	1-216-689-11	s	METAL, CHIP 39k 0.5% 1/10W
R38	1-216-680-11	s	METAL, CHIP 16k 0.5% 1/10W
R39	1-216-073-00	s	METAL, CHIP 10k 5% 1/10W
R40	1-216-089-91	s	METAL, CHIP 47k 5% 1/10W
R46	1-216-049-91	s	METAL, CHIP 1k 5% 1/10W
R48	1-216-089-91	s	METAL, CHIP 47k 5% 1/10W
R49	1-216-049-91	s	METAL, CHIP 1k 5% 1/10W

(SV-184 BOARD; Suffix -14)

Ref. No. or Q'ty	Part No.	SP	Description	
R50	1-216-089-91	s	METAL, CHIP 47k 5% 1/10W	
R51	1-216-295-91	s	RES, CHIP 0	
R52	1-216-073-00	s	METAL, CHIP 10k 5% 1/10W	
R54	1-216-089-91	s	METAL, CHIP 47k 5% 1/10W	
R55	1-216-089-91	s	METAL, CHIP 47k 5% 1/10W	
R56	1-216-049-91	s	METAL, CHIP 1k 5% 1/10W	
R57	1-216-049-91	s	METAL, CHIP 1k 5% 1/10W	
R58	1-216-089-91	s	METAL, CHIP 47k 5% 1/10W	
R59	1-216-089-91	s	METAL, CHIP 47k 5% 1/10W	
R60	1-216-089-91	s	METAL, CHIP 47k 5% 1/10W	
R61	1-216-089-91	s	METAL, CHIP 47k 5% 1/10W	
R62	1-216-073-00	s	METAL, CHIP 10k 5% 1/10W	
R63	1-216-295-91	s	RES, CHIP 0	
R64	1-216-073-00	s	METAL, CHIP 10k 5% 1/10W	
R65	1-216-295-91	s	RES, CHIP 0	
R68	1-216-049-91	s	METAL, CHIP 1k 5% 1/10W	
R69	1-216-073-00	s	METAL, CHIP 10k 5% 1/10W	
R70	1-216-635-11	s	METAL, CHIP 220 0.5% 1/10W	*1)
	1-216-635-11	s	METAL, CHIP 220 0.5% 1/10W	*2)
R71	1-216-097-91	s	METAL, CHIP 100k 5% 1/10W	
R72	1-216-049-91	s	METAL, CHIP 1k 5% 1/10W	
R73	1-216-049-91	s	METAL, CHIP 1k 5% 1/10W	
R75	1-216-089-91	s	METAL, CHIP 47k 5% 1/10W	
R76	1-216-089-91	s	METAL, CHIP 47k 5% 1/10W	
R77	1-216-089-91	s	METAL, CHIP 47k 5% 1/10W	
R78	1-216-073-00	s	METAL, CHIP 10k 5% 1/10W	
R79	1-216-049-91	s	METAL, CHIP 1k 5% 1/10W	
R80	1-216-073-00	s	METAL, CHIP 10k 5% 1/10W	
R81	1-216-049-91	s	METAL, CHIP 1k 5% 1/10W	
R82	1-216-073-00	s	METAL, CHIP 10k 5% 1/10W	
R83	1-216-073-00	s	METAL, CHIP 10k 5% 1/10W	
R84	1-216-073-00	s	METAL, CHIP 10k 5% 1/10W	
R85	1-216-073-00	s	METAL, CHIP 10k 5% 1/10W	
R86	1-216-295-91	s	RES, CHIP 0	
R87	1-216-073-00	s	METAL, CHIP 10k 5% 1/10W	
R88	1-216-073-00	s	METAL, CHIP 10k 5% 1/10W	
R89	1-216-049-91	s	METAL, CHIP 1k 5% 1/10W	
R90	1-216-049-91	s	METAL, CHIP 1k 5% 1/10W	
R91	1-216-049-91	s	METAL, CHIP 1k 5% 1/10W	
R92	1-216-049-91	s	METAL, CHIP 1k 5% 1/10W	
R93	1-216-049-91	s	METAL, CHIP 1k 5% 1/10W	
R94	1-216-295-91	s	RES, CHIP 0	
R95	1-216-073-00	s	METAL, CHIP 10k 5% 1/10W	
R101	1-216-033-00	s	METAL, CHIP 220 5% 1/10W	
R102	1-216-033-00	s	METAL, CHIP 220 5% 1/10W	
R103	1-216-073-00	s	METAL, CHIP 10k 5% 1/10W	
R104	1-216-073-00	s	METAL, CHIP 10k 5% 1/10W	
R105	1-216-073-00	s	METAL, CHIP 10k 5% 1/10W	
R106	1-216-073-00	s	METAL, CHIP 10k 5% 1/10W	
R107	1-216-073-00	s	METAL, CHIP 10k 5% 1/10W	
R108	1-216-073-00	s	METAL, CHIP 10k 5% 1/10W	
R109	1-216-073-00	s	METAL, CHIP 10k 5% 1/10W	
R110	1-216-097-91	s	METAL, CHIP 100k 5% 1/10W	
R111	1-216-049-91	s	METAL, CHIP 1k 5% 1/10W	
R112	1-216-073-00	s	METAL, CHIP 10k 5% 1/10W	
R113	1-216-073-00	s	METAL, CHIP 10k 5% 1/10W	
R115	1-216-049-91	s	METAL, CHIP 1k 5% 1/10W	
R116	1-216-057-00	s	METAL, CHIP 2.2k 5% 1/10W	

(SV-184 BOARD; Suffix -14)

Ref. No. or Q'ty	Part No.	SP	Description
R117	1-216-073-00	s	METAL, CHIP 10k 5% 1/10W
R118	1-216-073-00	s	METAL, CHIP 10k 5% 1/10W
R120	1-216-073-00	s	METAL, CHIP 10k 5% 1/10W
R121	1-216-073-00	s	METAL, CHIP 10k 5% 1/10W
R124	1-216-049-91	s	METAL, CHIP 1k 5% 1/10W
R125	1-216-049-91	s	METAL, CHIP 1k 5% 1/10W
R126	1-216-049-91	s	METAL, CHIP 1k 5% 1/10W
R127	1-216-049-91	s	METAL, CHIP 1k 5% 1/10W
R130	1-216-073-00	s	METAL, CHIP 10k 5% 1/10W
R135	1-216-049-91	s	METAL, CHIP 1k 5% 1/10W
R136	1-216-049-91	s	METAL, CHIP 1k 5% 1/10W
R137	1-216-049-91	s	METAL, CHIP 1k 5% 1/10W
R138	1-216-049-91	s	METAL, CHIP 1k 5% 1/10W
R139	1-216-049-91	s	METAL, CHIP 1k 5% 1/10W
R140	1-216-049-91	s	METAL, CHIP 1k 5% 1/10W
R141	1-216-049-91	s	METAL, CHIP 1k 5% 1/10W
R142	1-216-049-91	s	METAL, CHIP 1k 5% 1/10W
R143	1-216-073-00	s	METAL, CHIP 10k 5% 1/10W
R144	1-216-073-00	s	METAL, CHIP 10k 5% 1/10W
R145	1-216-073-00	s	METAL, CHIP 10k 5% 1/10W
R146	1-216-049-91	s	METAL, CHIP 1k 5% 1/10W
R147	1-216-295-91	s	RES, CHIP 0
R148	1-216-049-91	s	METAL, CHIP 1k 5% 1/10W
R149	1-216-037-00	s	METAL, CHIP 330 5% 1/10W
R150	1-216-049-91	s	METAL, CHIP 1k 5% 1/10W
R151	1-216-049-91	s	METAL, CHIP 1k 5% 1/10W
R152	1-216-073-00	s	METAL, CHIP 10k 5% 1/10W
R153	1-216-089-91	s	METAL, CHIP 47k 5% 1/10W
R154	1-216-089-91	s	METAL, CHIP 47k 5% 1/10W
R155	1-216-089-91	s	METAL, CHIP 47k 5% 1/10W
R156	1-216-089-91	s	METAL, CHIP 47k 5% 1/10W
R157	1-216-049-91	s	METAL, CHIP 1k 5% 1/10W
R158	1-216-089-91	s	METAL, CHIP 47k 5% 1/10W
R159	1-216-081-00	s	METAL, CHIP 22k 5% 1/10W
R160	1-216-085-00	s	METAL, CHIP 33k 5% 1/10W
R161	1-216-089-91	s	METAL, CHIP 47k 5% 1/10W
R162	1-216-109-00	s	METAL, CHIP 330k 5% 1/10W
R163	1-216-089-91	s	METAL, CHIP 47k 5% 1/10W
R164	1-216-081-00	s	METAL, CHIP 22k 5% 1/10W
R165	1-216-089-91	s	METAL, CHIP 47k 5% 1/10W
R166	1-216-081-00	s	METAL, CHIP 22k 5% 1/10W
R167	1-216-049-91	s	METAL, CHIP 1k 5% 1/10W
R168	1-216-089-91	s	METAL, CHIP 47k 5% 1/10W
R169	1-216-049-91	s	METAL, CHIP 1k 5% 1/10W
R170	1-216-025-91	s	METAL, CHIP 100 5% 1/10W
R171	1-216-089-91	s	METAL, CHIP 47k 5% 1/10W
R172	1-216-025-91	s	METAL, CHIP 100 5% 1/10W
R173	1-216-089-91	s	METAL, CHIP 47k 5% 1/10W
R176	1-216-295-91	s	RES, CHIP 0
R177	1-216-073-00	s	METAL, CHIP 10k 5% 1/10W
R179	1-216-049-91	s	METAL, CHIP 1k 5% 1/10W
R182	1-216-033-00	s	METAL, CHIP 220 5% 1/10W
R183	1-216-033-00	s	METAL, CHIP 220 5% 1/10W
R201	1-216-049-91	s	METAL, CHIP 1k 5% 1/10W
R202	1-216-049-91	s	METAL, CHIP 1k 5% 1/10W
R205	1-216-073-00	s	METAL, CHIP 10k 5% 1/10W
R206	1-216-073-00	s	METAL, CHIP 10k 5% 1/10W
R207	1-216-073-00	s	METAL, CHIP 10k 5% 1/10W
R208	1-216-073-00	s	METAL, CHIP 10k 5% 1/10W

(SV-184 BOARD; Suffix -14)

Ref. No. or Q'ty	Part No.	SP	Description
R209	1-216-073-00	s	METAL, CHIP 10k 5% 1/10W
R210	1-216-073-00	s	METAL, CHIP 10k 5% 1/10W
R211	1-216-073-00	s	METAL, CHIP 10k 5% 1/10W
R212	1-216-073-00	s	METAL, CHIP 10k 5% 1/10W
R213	1-216-089-91	s	METAL, CHIP 47k 5% 1/10W
R214	1-216-073-00	s	METAL, CHIP 10k 5% 1/10W
R215	1-216-089-91	s	METAL, CHIP 47k 5% 1/10W
R216	1-216-089-91	s	METAL, CHIP 47k 5% 1/10W
R217	1-216-089-91	s	METAL, CHIP 47k 5% 1/10W
R221	1-216-073-00	s	METAL, CHIP 10k 5% 1/10W
R222	1-216-073-00	s	METAL, CHIP 10k 5% 1/10W
R223	1-216-049-91	s	METAL, CHIP 1k 5% 1/10W
R224	1-216-049-91	s	METAL, CHIP 1k 5% 1/10W
R225	1-216-049-91	s	METAL, CHIP 1k 5% 1/10W
R229	1-216-049-91	s	METAL, CHIP 1k 5% 1/10W
R231	1-216-121-91	s	METAL, CHIP 1M 5% 1/10W
R232	1-216-049-91	s	METAL, CHIP 1k 5% 1/10W
R233	1-216-049-91	s	METAL, CHIP 1k 5% 1/10W
R234	1-216-049-91	s	METAL, CHIP 1k 5% 1/10W
R235	1-216-049-91	s	METAL, CHIP 1k 5% 1/10W
R236	1-216-049-91	s	METAL, CHIP 1k 5% 1/10W
R237	1-216-049-91	s	METAL, CHIP 1k 5% 1/10W
R238	1-216-097-91	s	METAL, CHIP 100k 5% 1/10W
R239	1-216-081-00	s	METAL, CHIP 22k 5% 1/10W
R240	1-216-105-91	s	METAL, CHIP 220k 5% 1/10W
R241	1-216-105-91	s	METAL, CHIP 220k 5% 1/10W
R243	1-216-295-91	s	RES, CHIP 0
R244	1-216-097-91	s	METAL, CHIP 100k 5% 1/10W
R245	1-216-081-00	s	METAL, CHIP 22k 5% 1/10W
R246	1-216-105-91	s	METAL, CHIP 220k 5% 1/10W
R247	1-216-089-91	s	METAL, CHIP 47k 5% 1/10W
R248	1-216-089-91	s	METAL, CHIP 47k 5% 1/10W
R249	1-216-089-91	s	METAL, CHIP 47k 5% 1/10W
R250	1-216-025-91	s	METAL, CHIP 100 5% 1/10W
R251	1-216-025-91	s	METAL, CHIP 100 5% 1/10W
R252	1-216-049-91	s	METAL, CHIP 1k 5% 1/10W
R253	1-216-049-91	s	METAL, CHIP 1k 5% 1/10W
R256	1-216-049-91	s	METAL, CHIP 1k 5% 1/10W
R257	1-216-049-91	s	METAL, CHIP 1k 5% 1/10W
R258	1-216-049-91	s	METAL, CHIP 1k 5% 1/10W
R260	1-216-025-91	s	METAL, CHIP 100 5% 1/10W
R261	1-216-025-91	s	METAL, CHIP 100 5% 1/10W
R262	1-216-049-91	s	METAL, CHIP 1k 5% 1/10W
R263	1-216-049-91	s	METAL, CHIP 1k 5% 1/10W
R264	1-216-049-91	s	METAL, CHIP 1k 5% 1/10W
R266	1-216-049-91	s	METAL, CHIP 1k 5% 1/10W
R267	1-216-049-91	s	METAL, CHIP 1k 5% 1/10W
R268	1-216-049-91	s	METAL, CHIP 1k 5% 1/10W
R271	1-216-049-91	s	METAL, CHIP 1k 5% 1/10W
R272	1-216-049-91	s	METAL, CHIP 1k 5% 1/10W
R273	1-216-049-91	s	METAL, CHIP 1k 5% 1/10W
R274	1-216-049-91	s	METAL, CHIP 1k 5% 1/10W
R275	1-216-049-91	s	METAL, CHIP 1k 5% 1/10W
R276	1-216-049-91	s	METAL, CHIP 1k 5% 1/10W
R277	1-216-295-91	s	RES, CHIP 0
R278	1-216-295-91	s	RES, CHIP 0
R279	1-216-089-91	s	METAL, CHIP 47k 5% 1/10W
R280	1-216-089-91	s	METAL, CHIP 47k 5% 1/10W
R281	1-216-068-00	s	METAL, CHIP 6.2k 5% 1/10W

(SV-184 BOARD; Suffix -14)

Ref. No. or Q'ty	Part No.	SP	Description
R282	1-216-075-00	s	METAL, CHIP 12k 5% 1/10W
R283	1-216-068-00	s	METAL, CHIP 6.2k 5% 1/10W
R284	1-216-295-91	s	RES, CHIP 0
R285	1-216-295-91	s	RES, CHIP 0
R286	1-216-097-91	s	METAL, CHIP 100k 5% 1/10W
R287	1-216-089-91	s	METAL, CHIP 47k 5% 1/10W
R288	1-216-049-91	s	METAL, CHIP 1k 5% 1/10W
R289	1-216-089-91	s	METAL, CHIP 47k 5% 1/10W
R290	1-216-089-91	s	METAL, CHIP 47k 5% 1/10W
R291	1-216-049-91	s	METAL, CHIP 1k 5% 1/10W
R292	1-216-049-91	s	METAL, CHIP 1k 5% 1/10W
R296	1-216-049-91	s	METAL, CHIP 1k 5% 1/10W
R297	1-216-049-91	s	METAL, CHIP 1k 5% 1/10W
R315	1-216-073-00	s	METAL, CHIP 10k 5% 1/10W
R316	1-216-073-00	s	METAL, CHIP 10k 5% 1/10W
R317	1-216-073-00	s	METAL, CHIP 10k 5% 1/10W
R318	1-216-073-00	s	METAL, CHIP 10k 5% 1/10W
R319	1-216-073-00	s	METAL, CHIP 10k 5% 1/10W
R320	1-216-081-00	s	METAL, CHIP 22k 5% 1/10W
R321	1-216-073-00	s	METAL, CHIP 10k 5% 1/10W
R322	1-216-081-00	s	METAL, CHIP 22k 5% 1/10W
R323	1-216-089-91	s	METAL, CHIP 47k 5% 1/10W
R324	1-216-089-91	s	METAL, CHIP 47k 5% 1/10W
R325	1-216-057-00	s	METAL, CHIP 2.2k 5% 1/10W
R327	1-216-073-00	s	METAL, CHIP 10k 5% 1/10W
R328	1-216-073-00	s	METAL, CHIP 10k 5% 1/10W
R329	1-216-097-91	s	METAL, CHIP 100k 5% 1/10W
R330	1-216-089-91	s	METAL, CHIP 47k 5% 1/10W
R331	1-216-073-00	s	METAL, CHIP 10k 5% 1/10W
R332	1-216-073-00	s	METAL, CHIP 10k 5% 1/10W
R333	1-216-073-00	s	METAL, CHIP 10k 5% 1/10W
R335	1-216-073-00	s	METAL, CHIP 10k 5% 1/10W
R336	1-216-089-91	s	METAL, CHIP 47k 5% 1/10W
R337	1-216-113-00	s	METAL, CHIP 470k 5% 1/10W
R338	1-216-113-00	s	METAL, CHIP 470k 5% 1/10W
R339	1-216-057-00	s	METAL, CHIP 2.2k 5% 1/10W
R340	1-216-097-91	s	METAL, CHIP 100k 5% 1/10W
R341	1-216-057-00	s	METAL, CHIP 2.2k 5% 1/10W
R342	1-216-057-00	s	METAL, CHIP 2.2k 5% 1/10W
R343	1-216-073-00	s	METAL, CHIP 10k 5% 1/10W
R344	1-216-049-91	s	METAL, CHIP 1k 5% 1/10W
R345	1-216-073-00	s	METAL, CHIP 10k 5% 1/10W
R346	1-216-073-00	s	METAL, CHIP 10k 5% 1/10W
R347	1-216-105-91	s	METAL, CHIP 220k 5% 1/10W
R348	1-216-073-00	s	METAL, CHIP 10k 5% 1/10W
R349	1-215-863-11	s	METAL 100 5% 1W
R350	1-215-863-11	s	METAL 100 5% 1W
R351	1-216-079-00	s	METAL, CHIP 18k 5% 1/10W
R352	1-216-073-00	s	METAL, CHIP 10k 5% 1/10W
R353	1-216-103-00	s	METAL, CHIP 180k 5% 1/10W
R354	1-216-383-11	s	METAL 0.33 5% 3W
R355	1-216-073-00	s	METAL, CHIP 10k 5% 1/10W
R356	1-216-365-00	s	METAL 0.47 5% 2W
R357	1-216-073-00	s	METAL, CHIP 10k 5% 1/10W
R358	1-216-073-00	s	METAL, CHIP 10k 5% 1/10W
R359	1-216-073-00	s	METAL, CHIP 10k 5% 1/10W
R360	1-216-073-00	s	METAL, CHIP 10k 5% 1/10W
R361	1-216-089-91	s	METAL, CHIP 47k 5% 1/10W
R362	1-216-089-91	s	METAL, CHIP 47k 5% 1/10W

(SV-184 BOARD; Suffix -14)

Ref. No. or Q'ty	Part No.	SP	Description	
R363	1-216-049-91	s	METAL, CHIP 1k 5% 1/10W	
R364	1-216-109-00	s	METAL, CHIP 330k 5% 1/10W	
R365	1-216-109-00	s	METAL, CHIP 330k 5% 1/10W	
R366	1-216-085-00	s	METAL, CHIP 33k 5% 1/10W	
R367	1-216-085-00	s	METAL, CHIP 33k 5% 1/10W	
R368	1-216-073-00	s	METAL, CHIP 10k 5% 1/10W	
R369	1-216-073-00	s	METAL, CHIP 10k 5% 1/10W	
R370	1-216-109-00	s	METAL, CHIP 330k 5% 1/10W	
R371	1-216-109-00	s	METAL, CHIP 330k 5% 1/10W	
R372	1-216-675-11	s	METAL, CHIP 10k 0.5% 1/10W	
R373	1-216-675-11	s	METAL, CHIP 10k 0.5% 1/10W	
R374	1-216-675-11	s	METAL, CHIP 10k 0.5% 1/10W	
R375	1-216-675-11	s	METAL, CHIP 10k 0.5% 1/10W	
R376	1-216-675-11	s	METAL, CHIP 10k 0.5% 1/10W	
R377	1-216-675-11	s	METAL, CHIP 10k 0.5% 1/10W	
R378	1-216-057-00	s	METAL, CHIP 2.2k 5% 1/10W	
R379	1-216-057-00	s	METAL, CHIP 2.2k 5% 1/10W	
R380	1-216-049-91	s	METAL, CHIP 1k 5% 1/10W	
R381	1-216-049-91	s	METAL, CHIP 1k 5% 1/10W	
R382	1-216-061-00	s	METAL, CHIP 3.3k 5% 1/10W	
R383	1-216-061-00	s	METAL, CHIP 3.3k 5% 1/10W	
R384	1-216-121-91	s	METAL, CHIP 1M 5% 1/10W	
R385	1-216-121-91	s	METAL, CHIP 1M 5% 1/10W	
R386	1-216-049-91	s	METAL, CHIP 1k 5% 1/10W	
R387	1-216-049-91	s	METAL, CHIP 1k 5% 1/10W	
R388	1-216-073-00	s	METAL, CHIP 10k 5% 1/10W	
R389	1-216-073-00	s	METAL, CHIP 10k 5% 1/10W	
R390	1-216-049-91	s	METAL, CHIP 1k 5% 1/10W	
R391	1-216-049-91	s	METAL, CHIP 1k 5% 1/10W	
R392	1-216-049-91	s	METAL, CHIP 1k 5% 1/10W	
R393	1-216-073-00	s	METAL, CHIP 10k 5% 1/10W	
R394	1-216-049-91	s	METAL, CHIP 1k 5% 1/10W	
R395	1-216-049-91	s	METAL, CHIP 1k 5% 1/10W	
R396	1-216-073-00	s	METAL, CHIP 10k 5% 1/10W	
R397	1-216-049-91	s	METAL, CHIP 1k 5% 1/10W	
R398	1-215-863-11	s	METAL 100 5% 1W	
R399	1-215-863-11	s	METAL 100 5% 1W	
R400	1-215-889-00	s	METAL 330 5% 2W	
R401	1-215-889-00	s	METAL 330 5% 2W	
R402	1-215-889-00	s	METAL 330 5% 2W	
R403	1-215-889-00	s	METAL 330 5% 2W	
R404	1-215-863-11	s	METAL 100 5% 1W	
R405	1-215-863-11	s	METAL 100 5% 1W	
R406	1-216-049-91	s	METAL, CHIP 1k 5% 1/10W	
R407	1-216-049-91	s	METAL, CHIP 1k 5% 1/10W	
R408	1-216-049-91	s	METAL, CHIP 1k 5% 1/10W	
R409	1-216-049-91	s	METAL, CHIP 1k 5% 1/10W	
R410	1-216-365-00	s	METAL 0.47 5% 2W	
R411	1-216-073-00	s	METAL, CHIP 10k 5% 1/10W	*1)
	1-216-675-11	s	METAL, CHIP 10k 0.5% 1/10W	*2)
R412	1-216-089-91	s	METAL, CHIP 47k 5% 1/10W	
R413	1-216-089-91	s	METAL, CHIP 47k 5% 1/10W	
R414	1-216-365-00	s	METAL 0.47 5% 2W	
R415	1-216-073-00	s	METAL, CHIP 10k 5% 1/10W	*1)
	1-216-675-11	s	METAL, CHIP 10k 0.5% 1/10W	*2)
R416	1-216-365-00	s	METAL 0.47 5% 2W	
R417	1-216-073-00	s	METAL, CHIP 10k 5% 1/10W	*1)

(SV-184 BOARD; Suffix -14)

Ref. No. or Q'ty	Part No.	SP	Description	
	1-216-675-11	s	METAL, CHIP 10k 0.5% 1/10W	*2)
R418	1-216-365-00	s	METAL 0.47 5% 2W	
R419	1-216-073-00	s	METAL, CHIP 10k 5% 1/10W	*1)
	1-216-675-11	s	METAL, CHIP 10k 0.5% 1/10W	*2)
R420	1-216-073-00	s	METAL, CHIP 10k 5% 1/10W	*1)
	1-216-675-11	s	METAL, CHIP 10k 0.5% 1/10W	*2)
R421	1-216-073-00	s	METAL, CHIP 10k 5% 1/10W	
R422	1-216-089-91	s	METAL, CHIP 47k 5% 1/10W	*1)
	1-216-691-11	s	METAL, CHIP 47k 0.5% 1/10W	*2)
R423	1-216-073-00	s	METAL, CHIP 10k 5% 1/10W	*1)
	1-216-675-11	s	METAL, CHIP 10k 0.5% 1/10W	*2)
R424	1-216-089-91	s	METAL, CHIP 47k 5% 1/10W	*1)
	1-216-691-11	s	METAL, CHIP 47k 0.5% 1/10W	*2)
R425	1-216-073-00	s	METAL, CHIP 10k 5% 1/10W	*1)
	1-216-675-11	s	METAL, CHIP 10k 0.5% 1/10W	*2)
R426	1-216-089-91	s	METAL, CHIP 47k 5% 1/10W	*1)
	1-216-691-11	s	METAL, CHIP 47k 0.5% 1/10W	*2)
R427	1-216-073-00	s	METAL, CHIP 10k 5% 1/10W	
R428	1-216-089-91	s	METAL, CHIP 47k 5% 1/10W	
R429	1-216-073-00	s	METAL, CHIP 10k 5% 1/10W	*1)
	1-216-675-11	s	METAL, CHIP 10k 0.5% 1/10W	*2)
R430	1-216-089-91	s	METAL, CHIP 47k 5% 1/10W	*1)
	1-216-691-11	s	METAL, CHIP 47k 0.5% 1/10W	*2)
R431	1-216-089-91	s	METAL, CHIP 47k 5% 1/10W	
R432	1-216-073-00	s	METAL, CHIP 10k 5% 1/10W	
R433	1-216-073-00	s	METAL, CHIP 10k 5% 1/10W	
R434	1-216-365-00	s	METAL 0.47 5% 2W	
R435	1-216-089-91	s	METAL, CHIP 47k 5% 1/10W	*1)
	1-216-691-11	s	METAL, CHIP 47k 0.5% 1/10W	*2)
R436	1-216-089-91	s	METAL, CHIP 47k 5% 1/10W	*1)
	1-216-691-11	s	METAL, CHIP 47k 0.5% 1/10W	*2)
R437	1-216-089-91	s	METAL, CHIP 47k 5% 1/10W	*1)
	1-216-691-11	s	METAL, CHIP 47k 0.5% 1/10W	*2)
R438	1-216-365-00	s	METAL 0.47 5% 2W	
R439	1-216-089-91	s	METAL, CHIP 47k 5% 1/10W	*1)
	1-216-691-11	s	METAL, CHIP 47k 0.5% 1/10W	*2)
R440	1-216-001-00	s	METAL, CHIP 10 5% 1/10W	
R441	1-216-097-91	s	METAL, CHIP 100k 5% 1/10W	
R442	1-216-686-11	s	METAL, CHIP 30k 0.5% 1/10W	
R443	1-216-665-11	s	METAL, CHIP 3.9k 0.5% 1/10W	
R444	1-216-648-11	s	METAL, CHIP 750 0.5% 1/10W	
R445	1-216-659-11	s	METAL, CHIP 2.2k 0.5% 1/10W	

(SV-184 BOARD; Suffix -14)

Ref. No. or Q'ty	Part No.	SP	Description	
R446	1-216-659-11	s	METAL, CHIP 2.2k 0.5% 1/10W	
R447	1-216-691-11	s	METAL, CHIP 47k 0.5% 1/10W	
R448	1-216-691-11	s	METAL, CHIP 47k 0.5% 1/10W	
R449	1-216-699-11	s	METAL, CHIP 100k 0.5% 1/10W	
R450	1-216-675-11	s	METAL, CHIP 10k 0.5% 1/10W	
R451	1-216-073-00	s	METAL, CHIP 10k 5% 1/10W	
R452	1-218-764-11	s	METAL, CHIP 330k 0.5% 1/10W	
R453	1-216-073-00	s	METAL, CHIP 10k 5% 1/10W	
R454	1-216-073-00	s	METAL, CHIP 10k 5% 1/10W	
R455	1-215-866-11	s	METAL 330 5% 1W	
R456	1-216-057-00	s	METAL, CHIP 2.2k 5% 1/10W	
R457	1-216-025-91	s	METAL, CHIP 100 5% 1/10W	
R458	1-218-764-11	s	METAL, CHIP 330k 0.5% 1/10W	
R459	1-216-057-00	s	METAL, CHIP 2.2k 5% 1/10W	*3)
	1-247-839-11	s	CARBON 2.2k 5% 1/4W	*4)
R460	1-218-764-11	s	METAL, CHIP 330k 0.5% 1/10W	
R461	1-216-049-91	s	METAL, CHIP 1k 5% 1/10W	
R462	1-216-073-00	s	METAL, CHIP 10k 5% 1/10W	
R463	1-216-073-00	s	METAL, CHIP 10k 5% 1/10W	
R464	1-216-073-00	s	METAL, CHIP 10k 5% 1/10W	
R465	1-216-073-00	s	METAL, CHIP 10k 5% 1/10W	
R466	1-216-073-00	s	METAL, CHIP 10k 5% 1/10W	
R467	1-216-073-00	s	METAL, CHIP 10k 5% 1/10W	
R468	1-216-025-91	s	METAL, CHIP 100 5% 1/10W	
R469	1-216-105-91	s	METAL, CHIP 220k 5% 1/10W	
R470	1-216-025-91	s	METAL, CHIP 100 5% 1/10W	
R471	1-215-863-11	s	METAL 100 5% 1W	
R472	1-215-867-00	s	METAL 470 5% 1W	
R473	1-215-868-00	s	METAL 680 5% 1W	
R474	1-216-383-11	s	METAL 0.33 5% 3W	
R475	1-216-383-11	s	METAL 0.33 5% 3W	
R476	1-216-383-11	s	METAL 0.33 5% 3W	
R477	1-216-061-00	s	METAL, CHIP 3.3k 5% 1/10W	
R478	1-216-385-11	s	METAL 0.47 5% 3W	
R479	1-216-073-00	s	METAL, CHIP 10k 5% 1/10W	
R480	1-216-073-00	s	METAL, CHIP 10k 5% 1/10W	
R481	1-216-073-00	s	METAL, CHIP 10k 5% 1/10W	
R482	1-216-097-91	s	METAL, CHIP 100k 5% 1/10W	
R483	1-216-057-00	s	METAL, CHIP 2.2k 5% 1/10W	*3)
	1-247-839-11	s	CARBON 2.2k 5% 1/4W	*4)
R500	1-216-065-91	s	METAL, CHIP 4.7k 5% 1/10W	
R501	1-216-065-91	s	METAL, CHIP 4.7k 5% 1/10W	
R502	1-216-113-00	s	METAL, CHIP 470k 5% 1/10W	
R503	1-216-097-91	s	METAL, CHIP 100k 5% 1/10W	
R504	1-216-073-00	s	METAL, CHIP 10k 5% 1/10W	
R505	1-216-065-91	s	METAL, CHIP 4.7k 5% 1/10W	
R506	1-216-065-91	s	METAL, CHIP 4.7k 5% 1/10W	
R507	1-216-073-00	s	METAL, CHIP 10k 5% 1/10W	*1)
	1-216-675-11	s	METAL, CHIP 10k 0.5% 1/10W	*2)
R508	1-216-097-91	s	METAL, CHIP 100k 5% 1/10W	*1)
	1-216-699-11	s	METAL, CHIP 100k 0.5% 1/10W	*2)
R509	1-216-073-00	s	METAL, CHIP 10k 5% 1/10W	*1)
	1-216-675-11	s	METAL, CHIP 10k 0.5% 1/10W	*2)

(SV-184 BOARD; Suffix -14)

Ref. No. or Q'ty	Part No.	SP	Description	
R510	1-216-073-00	s	METAL, CHIP 10k 5% 1/10W	*1)
	1-216-675-11	s	METAL, CHIP 10k 0.5% 1/10W	*2)
R511	1-216-097-91	s	METAL, CHIP 100k 5% 1/10W	*1)
	1-216-699-11	s	METAL, CHIP 100k 0.5% 1/10W	*2)
R512	1-216-073-00	s	METAL, CHIP 10k 5% 1/10W	*1)
	1-216-675-11	s	METAL, CHIP 10k 0.5% 1/10W	*2)
R513	1-216-073-00	s	METAL, CHIP 10k 5% 1/10W	*1)
	1-216-675-11	s	METAL, CHIP 10k 0.5% 1/10W	*2)
R514	1-216-097-91	s	METAL, CHIP 100k 5% 1/10W	*1)
	1-216-699-11	s	METAL, CHIP 100k 0.5% 1/10W	*2)
R515	1-216-073-00	s	METAL, CHIP 10k 5% 1/10W	*1)
	1-216-675-11	s	METAL, CHIP 10k 0.5% 1/10W	*2)
R516	1-216-073-00	s	METAL, CHIP 10k 5% 1/10W	*1)
	1-216-675-11	s	METAL, CHIP 10k 0.5% 1/10W	*2)
R517	1-216-097-91	s	METAL, CHIP 100k 5% 1/10W	*1)
	1-216-699-11	s	METAL, CHIP 100k 0.5% 1/10W	*2)
R518	1-216-073-00	s	METAL, CHIP 10k 5% 1/10W	*1)
	1-216-675-11	s	METAL, CHIP 10k 0.5% 1/10W	*2)
RB1	1-239-308-11	s	RESISTOR BLOCK, CHIP 47k x 8	
RB2	1-236-904-11	s	RESISTOR BLOCK, CHIP 1k x 4	
RB102	1-239-308-11	s	RESISTOR BLOCK, CHIP 47k x 8	
RB103	1-239-308-11	s	RESISTOR BLOCK, CHIP 47k x 8	
RB104	1-239-308-11	s	RESISTOR BLOCK, CHIP 47k x 8	
RB201	1-239-389-11	s	RESISTOR BLOCK, CHIP 47k x 4	
RB262	1-239-309-11	s	RESISTOR BLOCK, CHIP 100k x 8	
S101	1-692-536-11	s	SWITCH, DIP, CHIP 8-CKT	
S201	1-692-535-11	s	SWITCH, DIP, CHIP 4-CKT	
TP1	1-535-881-21	o	TERMINAL, TP	
TP6	1-535-881-21	o	TERMINAL, TP	
TP7	1-535-881-21	o	TERMINAL, TP	
TP101	1-535-881-21	o	TERMINAL, TP	
TP102	1-535-881-21	o	TERMINAL, TP	
TP103	1-535-881-21	o	TERMINAL, TP	
TP104	1-535-881-21	o	TERMINAL, TP	
TP105	1-535-881-21	o	TERMINAL, TP	
TP106	1-535-881-21	o	TERMINAL, TP	
TP107	1-535-881-21	o	TERMINAL, TP	
TP108	1-535-881-21	o	TERMINAL, TP	
TP201	1-535-881-21	o	TERMINAL, TP	
TP202	1-535-881-21	o	TERMINAL, TP	
TP203	1-535-881-21	o	TERMINAL, TP	
TP204	1-535-881-21	o	TERMINAL, TP	
TP205	1-535-881-21	o	TERMINAL, TP	
TP206	1-535-881-21	o	TERMINAL, TP	
TP207	1-535-881-21	o	TERMINAL, TP	
TP208	1-535-881-21	o	TERMINAL, TP	

(SV-184 BOARD; Suffix -14)

Ref. No. or Q'ty	Part No.	SP	Description
TP301	1-535-881-21	o	TERMINAL, TP
TP303	1-535-881-21	o	TERMINAL, TP
TP305	1-535-881-21	o	TERMINAL, TP
X1	1-579-996-21	s	RESONATOR, CERAMIC 20.0MHz
X101	1-579-996-21	s	RESONATOR, CERAMIC 20.0MHz
X201	1-579-996-21	s	RESONATOR, CERAMIC 20.0MHz

SV-184 BOARD; Suffix -11 to 13

Ref. No. or Q'ty	Part No.	SP	Description	

This list corresponds to the board suffix numbers -11 through -13.

The parts marked * are different, depending on the product serial numbers, as shown below:

- *1) Serial number; 10001 through 10120 (For DSR-60 J)
  Serial number; 10001 through 10180 (For DSR-60 UC)
  Serial number; 10001 through 10250 (For DSR-60P CE)
- *2) Serial number; 10121 and higher (For DSR-60 J)
  Serial number; 10181 and higher (For DSR-60 UC)
  Serial number; 10251 and higher (For DSR-60P CE)
- *3) Serial number; 10001 through 10420 (For DSR-60 J)
  Serial number; 10001 through 10280 (For DSR-60 UC)
  Serial number; 10001 through 10350 (For DSR-60P CE)
- *4) Serial number; 10421 and higher (For DSR-60 J)
  Serial number; 10281 and higher (For DSR-60 UC)
  Serial number; 10351 and higher (For DSR-60P CE)

Ref. No. or Q'ty	Part No.	SP	Description	
1pc	A-8312-944-A	o	MOUNTED CIRCUIT BOARD, SV-184	
1pc	7-621-759-45	s	+PSW, 2.6x6	
1pc	3-179-084-01	s	LEVER (R), PRINTED CIRCUIT BOARD	
1pc	3-179-085-01	s	LEVER (L), PRINTED CIRCUIT BOARD	
13pcs	7-621-759-65	s	+PSW, 2.6x8	
1pc	1-528-749-11	s	BATTERY, LITHIUM	
C1	1-126-967-11	s	ELECT 47uF 20% 50V	*1)
	1-107-909-11	s	ELECT 47uF 20% 16V	*2)
C4	1-163-809-11	s	CERAMIC, CHIP 0.047uF 10% 25V	
C5	1-135-076-21	s	TANTALUM, CHIP 1uF 10% 35V	
C6	1-163-275-11	s	CERAMIC, CHIP 0.001uF 5% 50V	
C9	1-135-076-21	s	TANTALUM, CHIP 1uF 10% 35V	
C12	1-163-037-11	s	CERAMIC, CHIP 0.022uF 10% 25V	
C13	1-163-133-00	s	CERAMIC, CHIP 470pF 5% 50V	
C14	1-163-037-11	s	CERAMIC, CHIP 0.022uF 10% 25V	
C15	1-163-037-11	s	CERAMIC, CHIP 0.022uF 10% 25V	
C16	1-163-038-91	s	CERAMIC, CHIP 0.1uF 25V	
C17	1-163-091-00	s	CERAMIC, CHIP 8pF 50V	
C18	1-163-091-00	s	CERAMIC, CHIP 8pF 50V	
C19	1-163-275-11	s	CERAMIC, CHIP 0.001uF 5% 50V	
C20	1-163-275-11	s	CERAMIC, CHIP 0.001uF 5% 50V	
C21	1-163-038-91	s	CERAMIC, CHIP 0.1uF 25V	
C22	1-163-038-91	s	CERAMIC, CHIP 0.1uF 25V	
C23	1-163-038-91	s	CERAMIC, CHIP 0.1uF 25V	
C24	1-163-038-91	s	CERAMIC, CHIP 0.1uF 25V	
C25	1-163-038-91	s	CERAMIC, CHIP 0.1uF 25V	
C26	1-163-038-91	s	CERAMIC, CHIP 0.1uF 25V	
C27	1-163-038-91	s	CERAMIC, CHIP 0.1uF 25V	
C28	1-163-038-91	s	CERAMIC, CHIP 0.1uF 25V	
C29	1-163-038-91	s	CERAMIC, CHIP 0.1uF 25V	
C30	1-163-038-91	s	CERAMIC, CHIP 0.1uF 25V	
C31	1-163-038-91	s	CERAMIC, CHIP 0.1uF 25V	
C32	1-163-038-91	s	CERAMIC, CHIP 0.1uF 25V	
C33	1-163-038-91	s	CERAMIC, CHIP 0.1uF 25V	
C34	1-163-038-91	s	CERAMIC, CHIP 0.1uF 25V	
C35	1-163-038-91	s	CERAMIC, CHIP 0.1uF 25V	
C36	1-163-038-91	s	CERAMIC, CHIP 0.1uF 25V	
C37	1-163-038-91	s	CERAMIC, CHIP 0.1uF 25V	
C38	1-163-038-91	s	CERAMIC, CHIP 0.1uF 25V	
C39	1-163-038-91	s	CERAMIC, CHIP 0.1uF 25V	
C40	1-163-038-91	s	CERAMIC, CHIP 0.1uF 25V	

(SV-184 BOARD; Suffix -11 to 13)

Ref. No. or Q'ty	Part No.	SP	Description	
C41	1-163-038-91	s	CERAMIC, CHIP 0.1uF 25V	
C42	1-163-038-91	s	CERAMIC, CHIP 0.1uF 25V	
C101	1-163-038-91	s	CERAMIC, CHIP 0.1uF 25V	
C102	1-163-227-11	s	CERAMIC, CHIP 10pF 5% 50V	
C103	1-163-227-11	s	CERAMIC, CHIP 10pF 5% 50V	
C104	1-163-037-11	s	CERAMIC, CHIP 0.022uF 10% 25V	
C105	1-163-037-11	s	CERAMIC, CHIP 0.022uF 10% 25V	
C106	1-164-695-11	s	CERAMIC, CHIP 0.0022uF 5% 50V	
C107	1-163-037-11	s	CERAMIC, CHIP 0.022uF 10% 25V	
C108	1-163-037-11	s	CERAMIC, CHIP 0.022uF 10% 25V	
C109	1-163-038-91	s	CERAMIC, CHIP 0.1uF 25V	
C110	1-163-038-91	s	CERAMIC, CHIP 0.1uF 25V	
C111	1-163-038-91	s	CERAMIC, CHIP 0.1uF 25V	
C112	1-163-038-91	s	CERAMIC, CHIP 0.1uF 25V	
C114	1-163-038-91	s	CERAMIC, CHIP 0.1uF 25V	
C115	1-163-038-91	s	CERAMIC, CHIP 0.1uF 25V	
C116	1-163-038-91	s	CERAMIC, CHIP 0.1uF 25V	
C119	1-163-133-00	s	CERAMIC, CHIP 470pF 5% 50V	
C120	1-163-133-00	s	CERAMIC, CHIP 470pF 5% 50V	
C201	1-163-275-11	s	CERAMIC, CHIP 0.001uF 5% 50V	
C202	1-163-275-11	s	CERAMIC, CHIP 0.001uF 5% 50V	
C205	1-163-275-11	s	CERAMIC, CHIP 0.001uF 5% 50V	
C206	1-163-275-11	s	CERAMIC, CHIP 0.001uF 5% 50V	
C207	1-163-275-11	s	CERAMIC, CHIP 0.001uF 5% 50V	
C208	1-163-275-11	s	CERAMIC, CHIP 0.001uF 5% 50V	
C209	1-163-275-11	s	CERAMIC, CHIP 0.001uF 5% 50V	
C210	1-163-275-11	s	CERAMIC, CHIP 0.001uF 5% 50V	
C211	1-163-275-11	s	CERAMIC, CHIP 0.001uF 5% 50V	
C212	1-163-133-00	s	CERAMIC, CHIP 470pF 5% 50V	
C213	1-163-224-11	s	CERAMIC, CHIP 7pF 50V	
C214	1-163-224-11	s	CERAMIC, CHIP 7pF 50V	
C215	1-163-275-11	s	CERAMIC, CHIP 0.001uF 5% 50V	
C216	1-163-038-91	s	CERAMIC, CHIP 0.1uF 25V	
C217	1-126-967-11	s	ELECT 47uF 20% 50V	*1)
	1-107-909-11	s	ELECT 47uF 20% 16V	*2)
C218	1-126-967-11	s	ELECT 47uF 20% 50V	*1)
	1-107-909-11	s	ELECT 47uF 20% 16V	*2)
C219	1-163-037-11	s	CERAMIC, CHIP 0.022uF 10% 25V	
C220	1-164-232-11	s	CERAMIC, CHIP 0.01uF 10% 100V	
C221	1-164-232-11	s	CERAMIC, CHIP 0.01uF 10% 100V	
C222	1-163-275-11	s	CERAMIC, CHIP 0.001uF 5% 50V	
C223	1-163-275-11	s	CERAMIC, CHIP 0.001uF 5% 50V	
C224	1-164-695-11	s	CERAMIC, CHIP 0.0022uF 5% 50V	*1)
C225	1-164-232-11	s	CERAMIC, CHIP 0.01uF 10% 100V	
C226	1-163-275-11	s	CERAMIC, CHIP 0.001uF 5% 50V	
C227	1-163-038-91	s	CERAMIC, CHIP 0.1uF 25V	
C228	1-163-038-91	s	CERAMIC, CHIP 0.1uF 25V	
C229	1-163-038-91	s	CERAMIC, CHIP 0.1uF 25V	
C230	1-163-038-91	s	CERAMIC, CHIP 0.1uF 25V	
C231	1-163-038-91	s	CERAMIC, CHIP 0.1uF 25V	
C232	1-163-038-91	s	CERAMIC, CHIP 0.1uF 25V	
C233	1-163-038-91	s	CERAMIC, CHIP 0.1uF 25V	
C234	1-163-038-91	s	CERAMIC, CHIP 0.1uF 25V	
C235	1-163-038-91	s	CERAMIC, CHIP 0.1uF 25V	
C236	1-163-037-11	s	CERAMIC, CHIP 0.022uF 10% 25V	*2)
C307	1-163-038-91	s	CERAMIC, CHIP 0.1uF 25V	
C313	1-163-038-91	s	CERAMIC, CHIP 0.1uF 25V	

(SV-184 BOARD; Suffix -11 to 13)

Ref. No. or Q'ty	Part No.	SP	Description	
C314	1-163-275-11	s	CERAMIC, CHIP 0.001uF 5% 50V	
C315	1-163-275-11	s	CERAMIC, CHIP 0.001uF 5% 50V	
C316	1-163-275-11	s	CERAMIC, CHIP 0.001uF 5% 50V	
C317	1-163-809-11	s	CERAMIC, CHIP 0.047uF 10% 25V	
C318	1-163-275-11	s	CERAMIC, CHIP 0.001uF 5% 50V	
C319	1-163-275-11	s	CERAMIC, CHIP 0.001uF 5% 50V	
C320	1-164-232-11	s	CERAMIC, CHIP 0.01uF 10% 100V	
C321	1-164-232-11	s	CERAMIC, CHIP 0.01uF 10% 100V	
C322	1-130-489-00	s	MYLAR 0.033uF 5% 50V	
C323	1-163-037-11	s	CERAMIC, CHIP 0.022uF 10% 25V	
C324	1-164-695-11	s	CERAMIC, CHIP 0.0022uF 5% 50V	
C325	1-163-243-11	s	CERAMIC, CHIP 47pF 5% 50V	
C326	1-163-038-91	s	CERAMIC, CHIP 0.1uF 25V	
C327	1-163-038-91	s	CERAMIC, CHIP 0.1uF 25V	
C328	1-163-243-11	s	CERAMIC, CHIP 47pF 5% 50V	
C329	1-164-695-11	s	CERAMIC, CHIP 0.0022uF 5% 50V	
C330	1-164-695-11	s	CERAMIC, CHIP 0.0022uF 5% 50V	
C331	1-163-037-11	s	CERAMIC, CHIP 0.022uF 10% 25V	
C332	1-163-037-11	s	CERAMIC, CHIP 0.022uF 10% 25V	
C333	1-163-251-11	s	CERAMIC, CHIP 100pF 5% 50V	
C334	1-163-251-11	s	CERAMIC, CHIP 100pF 5% 50V	
C335	1-163-037-11	s	CERAMIC, CHIP 0.022uF 10% 25V	
C336	1-163-037-11	s	CERAMIC, CHIP 0.022uF 10% 25V	
C337	1-128-551-11	s	ELECT 22uF 20% 50V	*1)
	1-107-907-11	s	ELECT 22uF 20% 25V	*2)
C338	1-128-551-11	s	ELECT 22uF 20% 50V	*1)
	1-107-907-11	s	ELECT 22uF 20% 25V	*2)
C339	1-128-551-11	s	ELECT 22uF 20% 50V	*1)
	1-107-907-11	s	ELECT 22uF 20% 25V	*2)
C340	1-128-551-11	s	ELECT 22uF 20% 50V	*1)
	1-107-907-11	s	ELECT 22uF 20% 25V	*2)
C341	1-128-551-11	s	ELECT 22uF 20% 50V	*1)
	1-107-907-11	s	ELECT 22uF 20% 25V	*2)
C342	1-128-551-11	s	ELECT 22uF 20% 50V	*1)
	1-107-907-11	s	ELECT 22uF 20% 25V	*2)
C343	1-128-551-11	s	ELECT 22uF 20% 50V	*1)
	1-107-907-11	s	ELECT 22uF 20% 25V	*2)
C344	1-128-551-11	s	ELECT 22uF 20% 50V	*1)
	1-107-907-11	s	ELECT 22uF 20% 25V	*2)
C345	1-130-489-00	s	MYLAR 0.033uF 5% 50V	
C346	1-130-489-00	s	MYLAR 0.033uF 5% 50V	
C347	1-130-489-00	s	MYLAR 0.033uF 5% 50V	
C348	1-130-489-00	s	MYLAR 0.033uF 5% 50V	
C349	1-164-232-11	s	CERAMIC, CHIP 0.01uF 10% 100V	
C350	1-164-232-11	s	CERAMIC, CHIP 0.01uF 10% 100V	
C351	1-164-232-11	s	CERAMIC, CHIP 0.01uF 10% 100V	
C352	1-164-232-11	s	CERAMIC, CHIP 0.01uF 10% 100V	
C353	1-163-038-91	s	CERAMIC, CHIP 0.1uF 25V	
C354	1-163-038-91	s	CERAMIC, CHIP 0.1uF 25V	

(SV-184 BOARD; Suffix -11 to 13)

Ref. No. or Q'ty	Part No.	SP	Description	
C355	1-163-243-11	s	CERAMIC, CHIP 47pF 5% 50V	
C356	1-163-243-11	s	CERAMIC, CHIP 47pF 5% 50V	
C357	1-163-243-11	s	CERAMIC, CHIP 47pF 5% 50V	
C358	1-163-243-11	s	CERAMIC, CHIP 47pF 5% 50V	
C359	1-163-243-11	s	CERAMIC, CHIP 47pF 5% 50V	
C360	1-163-243-11	s	CERAMIC, CHIP 47pF 5% 50V	
C361	1-163-243-11	s	CERAMIC, CHIP 47pF 5% 50V	
C362	1-163-243-11	s	CERAMIC, CHIP 47pF 5% 50V	
C363	1-163-038-91	s	CERAMIC, CHIP 0.1uF 25V	
C364	1-163-038-91	s	CERAMIC, CHIP 0.1uF 25V	
C365	1-163-243-11	s	CERAMIC, CHIP 47pF 5% 50V	
C366	1-163-243-11	s	CERAMIC, CHIP 47pF 5% 50V	
C367	1-163-243-11	s	CERAMIC, CHIP 47pF 5% 50V	
C368	1-163-243-11	s	CERAMIC, CHIP 47pF 5% 50V	
C369	1-163-038-91	s	CERAMIC, CHIP 0.1uF 25V	
C370	1-163-037-11	s	CERAMIC, CHIP 0.022uF 10% 25V	
C371	1-163-037-11	s	CERAMIC, CHIP 0.022uF 10% 25V	
C372	1-126-964-11	s	ELECT 10uF 20% 50V	*1)
	1-107-906-11	s	ELECT 10uF 20% 50V	*2)
C373	1-126-964-11	s	ELECT 10uF 20% 50V	*1)
	1-107-906-11	s	ELECT 10uF 20% 50V	*2)
C374	1-163-133-00	s	CERAMIC, CHIP 470pF 5% 50V	
C375	1-163-133-00	s	CERAMIC, CHIP 470pF 5% 50V	
C376	1-163-038-91	s	CERAMIC, CHIP 0.1uF 25V	
C377	1-126-964-11	s	ELECT 10uF 20% 50V	*1)
	1-107-906-11	s	ELECT 10uF 20% 50V	*2)
C378	1-126-964-11	s	ELECT 10uF 20% 50V	*1)
	1-107-906-11	s	ELECT 10uF 20% 50V	*2)
C379	1-126-964-11	s	ELECT 10uF 20% 50V	*1)
	1-107-906-11	s	ELECT 10uF 20% 50V	*2)
C380	1-164-232-11	s	CERAMIC, CHIP 0.01uF 10% 100V	
C381	1-163-038-91	s	CERAMIC, CHIP 0.1uF 25V	
C382	1-126-933-11	s	ELECT 100uF 20% 16V	*1)
C383	1-163-038-91	s	CERAMIC, CHIP 0.1uF 25V	
C384	1-163-038-91	s	CERAMIC, CHIP 0.1uF 25V	
C385	1-163-038-91	s	CERAMIC, CHIP 0.1uF 25V	
C386	1-163-038-91	s	CERAMIC, CHIP 0.1uF 25V	
C387	1-163-038-91	s	CERAMIC, CHIP 0.1uF 25V	
C388	1-163-038-91	s	CERAMIC, CHIP 0.1uF 25V	
C392	1-163-038-91	s	CERAMIC, CHIP 0.1uF 25V	
C397	1-163-038-91	s	CERAMIC, CHIP 0.1uF 25V	
C398	1-163-038-91	s	CERAMIC, CHIP 0.1uF 25V	
C399	1-163-038-91	s	CERAMIC, CHIP 0.1uF 25V	
C400	1-163-038-91	s	CERAMIC, CHIP 0.1uF 25V	
C401	1-163-038-91	s	CERAMIC, CHIP 0.1uF 25V	
C402	1-163-038-91	s	CERAMIC, CHIP 0.1uF 25V	
C403	1-163-038-91	s	CERAMIC, CHIP 0.1uF 25V	
C404	1-163-038-91	s	CERAMIC, CHIP 0.1uF 25V	
C405	1-163-038-91	s	CERAMIC, CHIP 0.1uF 25V	
C406	1-163-038-91	s	CERAMIC, CHIP 0.1uF 25V	
C407	1-163-038-91	s	CERAMIC, CHIP 0.1uF 25V	
C408	1-126-947-11	s	ELECT 47uF 20% 35V	*1)

(SV-184 BOARD; Suffix -11 to 13)

Ref. No. or Q'ty	Part No.	SP	Description	
	1-107-909-11	s	ELECT 47uF 20% 16V	*2)
C409	1-126-933-11	s	ELECT 100uF 20% 16V	*1)
	1-128-526-11	s	ELECT 100uF 20% 16V	*2)
C410	1-126-947-11	s	ELECT 47uF 20% 35V	*1)
	1-107-909-11	s	ELECT 47uF 20% 16V	*2)
C411	1-163-038-91	s	CERAMIC, CHIP 0.1uF 25V	
C412	1-163-038-91	s	CERAMIC, CHIP 0.1uF 25V	
C413	1-163-038-91	s	CERAMIC, CHIP 0.1uF 25V	
C414	1-163-038-91	s	CERAMIC, CHIP 0.1uF 25V	
C415	1-163-038-91	s	CERAMIC, CHIP 0.1uF 25V	
C416	1-163-038-91	s	CERAMIC, CHIP 0.1uF 25V	
C417	1-126-933-11	s	ELECT 100uF 20% 16V	*1)
	1-128-526-11	s	ELECT 100uF 20% 16V	*2)
C418	1-126-933-11	s	ELECT 100uF 20% 16V	*1)
	1-128-526-11	s	ELECT 100uF 20% 16V	*2)
C419	1-126-933-11	s	ELECT 100uF 20% 16V	*1)
	1-128-526-11	s	ELECT 100uF 20% 16V	*2)
C420	1-163-038-91	s	CERAMIC, CHIP 0.1uF 25V	
C421	1-163-038-91	s	CERAMIC, CHIP 0.1uF 25V	
C422	1-163-038-91	s	CERAMIC, CHIP 0.1uF 25V	
C423	1-163-038-91	s	CERAMIC, CHIP 0.1uF 25V	
C424	1-163-038-91	s	CERAMIC, CHIP 0.1uF 25V	
C425	1-126-947-11	s	ELECT 47uF 20% 35V	*1)
	1-107-909-11	s	ELECT 47uF 20% 16V	*2)
C426	1-163-251-11	s	CERAMIC, CHIP 100pF 5% 50V	
C427	1-163-251-11	s	CERAMIC, CHIP 100pF 5% 50V	
C437	1-163-251-11	s	CERAMIC, CHIP 100pF 5% 50V	
C438	1-163-251-11	s	CERAMIC, CHIP 100pF 5% 50V	
C439	1-104-760-11	s	CERAMIC, CHIP 0.047uF 10% 50V	*2)
C441	1-163-038-91	s	CERAMIC, CHIP 0.1uF 25V	*4)
C442	1-163-038-91	s	CERAMIC, CHIP 0.1uF 25V	*4)
C443	1-163-038-91	s	CERAMIC, CHIP 0.1uF 25V	*4)
C444	1-163-038-91	s	CERAMIC, CHIP 0.1uF 25V	*4)
C445	1-163-038-91	s	CERAMIC, CHIP 0.1uF 25V	*4)
CN1	1-506-484-11	s	CONNECTOR 5P, MALE	
CN2	1-506-481-11	s	CONNECTOR 2P, MALE	
CN3	1-506-485-11	s	CONNECTOR 6P, MALE	
CNI5	1-526-660-21	o	SOCKET, IC 32P	
CNI6	1-526-660-21	o	SOCKET, IC 32P	
D1	8-719-941-86	s	DIODE DAN202U	
D2	8-719-941-09	s	DIODE DAP202U	
D3	8-719-941-86	s	DIODE DAN202U	
D4	8-719-941-09	s	DIODE DAP202U	
D5	8-719-941-86	s	DIODE DAN202U	
D6	8-719-941-09	s	DIODE DAP202U	
D7	8-719-941-86	s	DIODE DAN202U	
D8	8-719-941-09	s	DIODE DAP202U	
D13	8-719-941-86	s	DIODE DAN202U	
D14	8-719-941-09	s	DIODE DAP202U	

(SV-184 BOARD; Suffix -11 to 13)

Ref. No. or Q'ty	Part No.	SP	Description	
D15	8-719-941-23	s	DIODE DA204U	
D201	8-719-941-86	s	DIODE DAN202U	
D202	8-719-941-09	s	DIODE DAP202U	
D205	8-719-941-86	s	DIODE DAN202U	
D206	8-719-941-09	s	DIODE DAP202U	
D207	8-719-941-86	s	DIODE DAN202U	
D208	8-719-941-09	s	DIODE DAP202U	
D209	8-719-941-86	s	DIODE DAN202U	
D210	8-719-941-09	s	DIODE DAP202U	
D211	8-719-941-86	s	DIODE DAN202U	
D212	8-719-941-09	s	DIODE DAP202U	
D303	8-719-800-76	s	DIODE 1SS226	
D304	8-719-800-76	s	DIODE 1SS226	
D305	8-719-200-02	s	DIODE 10E2	
D306	8-719-200-02	s	DIODE 10E2	
D307	8-719-200-02	s	DIODE 10E2	
D308	8-719-200-02	s	DIODE 10E2	
D309	8-719-200-02	s	DIODE 10E2	
D310	8-719-200-02	s	DIODE 10E2	
D311	8-719-800-76	s	DIODE 1SS226	
FB301	1-414-581-21	s	FILTER, NOISE, CHIP	*2)
FL1	1-233-674-11	s	FILTER BLOCK, NOISE, CHIP	
FL2	1-233-674-11	s	FILTER BLOCK, NOISE, CHIP	
FL3	1-233-674-11	s	FILTER BLOCK, NOISE, CHIP	
FL4	1-233-314-11	s	FILTER, NOISE, CHIP	*4)
FL5	1-233-314-11	s	FILTER, NOISE, CHIP	*4)
IC1	8-759-348-69	s	IC HD6415108RF10	
IC2	8-759-254-78	s	IC CY7C185-25VC	
IC3	8-759-254-78	s	IC CY7C185-25VC	
IC4	8-759-399-65	s	IC M48Z58Y-70MH1TR	
IC5	8-759-539-81	o	IC M27C1001-10F1-80SV5-V1.33	
IC6	8-759-539-82	o	IC M27C1001-10F1-80SV6-V1.33	
IC7	8-759-185-69	s	IC TC74VHC27F(EL)	
IC8	8-759-186-29	s	IC TC74VHC11F	
IC9	8-759-186-47	s	IC TC74VHC138F(EL)	
IC10	8-759-186-47	s	IC TC74VHC138F(EL)	
IC11	8-759-186-32	s	IC TC74VHC21F	
IC12	8-759-081-42	s	IC TC74VHC00F	
IC13	8-759-186-38	s	IC TC74VHC32F(EL)	
IC14	8-759-925-76	s	IC SN74HC08ANS	
IC15	8-759-081-44	s	IC TC74VHC04F	
IC16	8-759-369-92	s	IC M51958AFP600D	
IC17	8-759-009-05	s	IC MC14051BF	
IC18	8-759-186-63	s	IC TC74VHC245F(EL)	
IC19	8-759-186-63	s	IC TC74VHC245F(EL)	
IC21	8-759-510-71	s	IC UPC358G2-E2	
IC23	8-759-186-63	s	IC TC74VHC245F(EL)	
IC101	8-752-343-05	s	IC CXD2202Q	
IC102	8-759-700-07	s	IC NJM2903M	
IC103	8-759-927-12	s	IC SN74HCT244ANS	
IC104	8-759-925-76	s	IC SN74HC08ANS	
IC105	8-759-100-95	s	IC UPC324G2	
IC106	8-759-175-56	s	IC CXD8804Q	
IC107	8-759-053-58	s	IC IDT6116SA25SO	
IC202	8-759-186-77	s	IC TC74VHC541F	
IC203	8-759-186-77	s	IC TC74VHC541F	
IC204	8-759-186-77	s	IC TC74VHC541F	
IC205	8-759-186-77	s	IC TC74VHC541F	

(SV-184 BOARD; Suffix -11 to 13)

Ref. No. or Q'ty	Part No.	SP	Description	
IC206	8-759-927-12	s	IC SN74HCT244ANS	
IC207	8-759-100-95	s	IC UPC324G2	
IC208	8-759-600-34	s	IC M54532P	
IC209	8-759-300-71	s	IC HD14053BFP	
IC210	8-759-368-51	s	IC M54523FP	
IC302	8-759-106-02	s	IC UPC4570G2	
IC303	8-759-700-07	s	IC NJM2903M	
IC304	8-759-100-95	s	IC UPC324G2	*1)
	8-759-141-05	s	IC UPC4574G2	*2)
IC306	8-759-300-71	s	IC HD14053BFP	
IC308	8-759-106-02	s	IC UPC4570G2	
IC309	8-759-239-23	s	IC TC74HC86AF	
IC310	8-759-055-82	s	IC M62353GP	
IC311	8-759-100-95	s	IC UPC324G2	
IC312	8-759-141-05	s	IC UPC4574G2	
IC313	8-759-141-05	s	IC UPC4574G2	
IC314	8-759-141-05	s	IC UPC4574G2	
IC315	8-759-700-07	s	IC NJM2903M	
IC316	8-759-106-02	s	IC UPC4570G2	
IC317	8-759-106-02	s	IC UPC4570G2	
IC318	8-759-182-84	s	IC PQ05SZ5U	
IC319	8-759-205-56	s	IC TA7267P	
IC320	8-759-205-56	s	IC TA7267P	
IC321	8-759-205-56	s	IC TA7267P	
IC323	8-759-106-02	s	IC UPC4570G2	*2)
IC324	8-759-100-95	s	IC UPC324G2	*4)
L302	1-412-533-21	s	INDUCTOR 47uH	
L303	1-412-533-21	s	INDUCTOR 47uH	
L304	1-412-533-21	s	INDUCTOR 47uH	
L305	1-412-533-21	s	INDUCTOR 47uH	
PS302	⚠ 1-532-679-00	s	LINK, IC 0.6A	
PS303	⚠ 1-532-679-00	s	LINK, IC 0.6A	
PS304	⚠ 1-532-679-00	s	LINK, IC 0.6A	
PS305	⚠ 1-532-679-00	s	LINK, IC 0.6A	
PS306	⚠ 1-532-675-21	s	LINK, IC 1.5A	
PS307	⚠ 1-532-679-00	s	LINK, IC 0.6A	
PS308	⚠ 1-532-675-21	s	LINK, IC 1.5A	*2)
PS309	⚠ 1-532-675-21	s	LINK, IC 1.5A	*2)
PS310	⚠ 1-532-675-21	s	LINK, IC 1.5A	*2)
PS311	⚠ 1-532-675-21	s	LINK, IC 1.5A	*2)
Q1	8-729-216-22	s	TRANSISTOR 2SA1162	
Q2	8-729-028-91	s	TRANSISTOR DTA144EUA-T106	
Q3	8-729-028-91	s	TRANSISTOR DTA144EUA-T106	
Q201	8-729-120-28	s	TRANSISTOR 2SC1623-L5L6	
Q202	8-729-120-28	s	TRANSISTOR 2SC1623-L5L6	
Q203	8-729-120-28	s	TRANSISTOR 2SC1623-L5L6	
Q204	8-729-216-22	s	TRANSISTOR 2SA1162	
Q205	8-729-120-28	s	TRANSISTOR 2SC1623-L5L6	
Q301	8-729-905-18	s	TRANSISTOR DTC144EU	
Q302	8-729-265-52	s	TRANSISTOR 2SC2655-Y	
Q303	8-729-021-83	s	TRANSISTOR 2SA1020-Y	
Q304	8-729-400-12	s	TRANSISTOR 2SB941-P	
Q305	8-729-209-06	s	TRANSISTOR 2SC4213A-TE85L	
Q306	8-729-209-06	s	TRANSISTOR 2SC4213A-TE85L	
Q307	8-729-265-52	s	TRANSISTOR 2SC2655-Y	
Q308	8-729-021-83	s	TRANSISTOR 2SA1020-Y	
Q309	8-729-265-52	s	TRANSISTOR 2SC2655-Y	

(SV-184 BOARD; Suffix -11 to 13)

Ref. No. or Q'ty	Part No.	SP	Description
Q310	8-729-021-83	s	TRANSISTOR 2SA1020-Y
Q311	8-729-112-61	s	TRANSISTOR 2SA1441-L
Q312	8-729-141-18	s	TRANSISTOR 2SC3692
Q313	8-729-102-14	s	TRANSISTOR 2SD1021-F
Q314	8-729-205-02	s	TRANSISTOR 2SA1150-Y
Q315	8-729-112-61	s	TRANSISTOR 2SA1441-L
Q316	8-729-141-18	s	TRANSISTOR 2SC3692
Q317	8-729-102-14	s	TRANSISTOR 2SD1021-F
Q318	8-729-205-02	s	TRANSISTOR 2SA1150-Y
Q319	8-729-112-61	s	TRANSISTOR 2SA1441-L
Q320	8-729-141-18	s	TRANSISTOR 2SC3692
Q321	8-729-112-61	s	TRANSISTOR 2SA1441-L
Q322	8-729-141-18	s	TRANSISTOR 2SC3692
Q323	8-729-265-52	s	TRANSISTOR 2SC2655-Y
Q324	8-729-141-83	s	TRANSISTOR 2SA473-Y
Q325	8-729-265-52	s	TRANSISTOR 2SC2655-Y
Q326	8-729-400-12	s	TRANSISTOR 2SB941-P
Q327	8-729-021-83	s	TRANSISTOR 2SA1020-Y
Q328	8-729-905-18	s	TRANSISTOR DTC144EU
Q329	8-729-905-18	s	TRANSISTOR DTC144EU
R1	1-216-089-91	s	METAL, CHIP 47k 5% 1/10W
R3	1-216-675-11	s	METAL, CHIP 10k 0.5% 1/10W
R5	1-216-675-11	s	METAL, CHIP 10k 0.5% 1/10W
R6	1-216-683-11	s	METAL, CHIP 22k 0.5% 1/10W
R7	1-216-675-11	s	METAL, CHIP 10k 0.5% 1/10W
R8	1-216-687-11	s	METAL, CHIP 33k 0.5% 1/10W
R9	1-216-699-11	s	METAL, CHIP 100k 0.5% 1/10W
R10	1-216-699-11	s	METAL, CHIP 100k 0.5% 1/10W
R11	1-216-089-91	s	METAL, CHIP 47k 5% 1/10W
R12	1-216-025-91	s	METAL, CHIP 100 5% 1/10W
R13	1-216-025-91	s	METAL, CHIP 100 5% 1/10W
R17	1-216-683-11	s	METAL, CHIP 22k 0.5% 1/10W
R18	1-218-764-11	s	METAL, CHIP 330k 0.5% 1/10W
R19	1-216-073-00	s	METAL, CHIP 10k 5% 1/10W
R20	1-216-073-00	s	METAL, CHIP 10k 5% 1/10W
R21	1-216-073-00	s	METAL, CHIP 10k 5% 1/10W
R22	1-216-073-00	s	METAL, CHIP 10k 5% 1/10W
R23	1-216-073-00	s	METAL, CHIP 10k 5% 1/10W
R24	1-216-073-00	s	METAL, CHIP 10k 5% 1/10W
R25	1-216-073-00	s	METAL, CHIP 10k 5% 1/10W
R26	1-216-073-00	s	METAL, CHIP 10k 5% 1/10W
R29	1-216-089-91	s	METAL, CHIP 47k 5% 1/10W
R31	1-216-073-00	s	METAL, CHIP 10k 5% 1/10W
R32	1-216-073-00	s	METAL, CHIP 10k 5% 1/10W
R33	1-216-073-00	s	METAL, CHIP 10k 5% 1/10W
R37	1-216-689-11	s	METAL, CHIP 39k 0.5% 1/10W
R38	1-216-680-11	s	METAL, CHIP 16k 0.5% 1/10W
R39	1-216-073-00	s	METAL, CHIP 10k 5% 1/10W
R40	1-216-089-91	s	METAL, CHIP 47k 5% 1/10W
R42	1-216-049-91	s	METAL, CHIP 1k 5% 1/10W
R43	1-216-049-91	s	METAL, CHIP 1k 5% 1/10W
R44	1-216-049-91	s	METAL, CHIP 1k 5% 1/10W
R45	1-216-049-91	s	METAL, CHIP 1k 5% 1/10W
R46	1-216-049-91	s	METAL, CHIP 1k 5% 1/10W
R48	1-216-089-91	s	METAL, CHIP 47k 5% 1/10W
R49	1-216-049-91	s	METAL, CHIP 1k 5% 1/10W
R50	1-216-089-91	s	METAL, CHIP 47k 5% 1/10W
R51	1-216-295-91	s	RES, CHIP 0
R52	1-216-073-00	s	METAL, CHIP 10k 5% 1/10W

(SV-184 BOARD; Suffix -11 to 13)

Ref. No. or Q'ty	Part No.	SP	Description
R54	1-216-089-91	s	METAL, CHIP 47k 5% 1/10W
R55	1-216-089-91	s	METAL, CHIP 47k 5% 1/10W
R56	1-216-049-91	s	METAL, CHIP 1k 5% 1/10W
R57	1-216-049-91	s	METAL, CHIP 1k 5% 1/10W
R58	1-216-089-91	s	METAL, CHIP 47k 5% 1/10W
R59	1-216-089-91	s	METAL, CHIP 47k 5% 1/10W
R60	1-216-089-91	s	METAL, CHIP 47k 5% 1/10W
R61	1-216-089-91	s	METAL, CHIP 47k 5% 1/10W
R62	1-216-073-00	s	METAL, CHIP 10k 5% 1/10W
R63	1-216-295-91	s	RES, CHIP 0
R64	1-216-073-00	s	METAL, CHIP 10k 5% 1/10W
R65	1-216-295-91	s	RES, CHIP 0
R66	1-216-073-00	s	METAL, CHIP 10k 5% 1/10W
R68	1-216-049-91	s	METAL, CHIP 1k 5% 1/10W
R69	1-216-073-00	s	METAL, CHIP 10k 5% 1/10W
R70	1-216-635-11	s	METAL, CHIP 220 0.5% 1/10W
R71	1-216-097-91	s	METAL, CHIP 100k 5% 1/10W
R72	1-216-049-91	s	METAL, CHIP 1k 5% 1/10W
R73	1-216-049-91	s	METAL, CHIP 1k 5% 1/10W
R75	1-216-089-91	s	METAL, CHIP 47k 5% 1/10W
R76	1-216-089-91	s	METAL, CHIP 47k 5% 1/10W
R77	1-216-089-91	s	METAL, CHIP 47k 5% 1/10W
R78	1-216-073-00	s	METAL, CHIP 10k 5% 1/10W
R79	1-216-049-91	s	METAL, CHIP 1k 5% 1/10W
R80	1-216-073-00	s	METAL, CHIP 10k 5% 1/10W
R81	1-216-049-91	s	METAL, CHIP 1k 5% 1/10W
R82	1-216-073-00	s	METAL, CHIP 10k 5% 1/10W
R83	1-216-073-00	s	METAL, CHIP 10k 5% 1/10W
R84	1-216-073-00	s	METAL, CHIP 10k 5% 1/10W
R85	1-216-073-00	s	METAL, CHIP 10k 5% 1/10W
R86	1-216-295-91	s	RES, CHIP 0
R87	1-216-073-00	s	METAL, CHIP 10k 5% 1/10W
R88	1-216-073-00	s	METAL, CHIP 10k 5% 1/10W
R89	1-216-049-91	s	METAL, CHIP 1k 5% 1/10W
R90	1-216-049-91	s	METAL, CHIP 1k 5% 1/10W
R91	1-216-049-91	s	METAL, CHIP 1k 5% 1/10W
R92	1-216-049-91	s	METAL, CHIP 1k 5% 1/10W
R93	1-216-049-91	s	METAL, CHIP 1k 5% 1/10W
R94	1-216-295-91	s	RES, CHIP 0
R95	1-216-073-00	s	METAL, CHIP 10k 5% 1/10W
R101	1-216-295-91	s	RES, CHIP 0
R102	1-216-295-91	s	RES, CHIP 0
R103	1-216-073-00	s	METAL, CHIP 10k 5% 1/10W
R104	1-216-073-00	s	METAL, CHIP 10k 5% 1/10W
R105	1-216-073-00	s	METAL, CHIP 10k 5% 1/10W
R106	1-216-073-00	s	METAL, CHIP 10k 5% 1/10W
R107	1-216-073-00	s	METAL, CHIP 10k 5% 1/10W
R108	1-216-073-00	s	METAL, CHIP 10k 5% 1/10W
R109	1-216-073-00	s	METAL, CHIP 10k 5% 1/10W
R110	1-216-097-91	s	METAL, CHIP 100k 5% 1/10W
R111	1-216-049-91	s	METAL, CHIP 1k 5% 1/10W
R112	1-216-073-00	s	METAL, CHIP 10k 5% 1/10W
R113	1-216-073-00	s	METAL, CHIP 10k 5% 1/10W
R114	1-216-089-91	s	METAL, CHIP 47k 5% 1/10W
R115	1-216-049-91	s	METAL, CHIP 1k 5% 1/10W
R116	1-216-057-00	s	METAL, CHIP 2.2k 5% 1/10W
R117	1-216-073-00	s	METAL, CHIP 10k 5% 1/10W
R118	1-216-073-00	s	METAL, CHIP 10k 5% 1/10W
R119	1-216-089-91	s	METAL, CHIP 47k 5% 1/10W

(SV-184 BOARD; Suffix -11 to 13)

Ref. No. or Q'ty	Part No.	SP	Description
R120	1-216-073-00	s	METAL, CHIP 10k 5% 1/10W
R121	1-216-073-00	s	METAL, CHIP 10k 5% 1/10W
R122	1-216-089-91	s	METAL, CHIP 47k 5% 1/10W
R123	1-216-089-91	s	METAL, CHIP 47k 5% 1/10W
R124	1-216-049-91	s	METAL, CHIP 1k 5% 1/10W
R125	1-216-049-91	s	METAL, CHIP 1k 5% 1/10W
R126	1-216-049-91	s	METAL, CHIP 1k 5% 1/10W
R127	1-216-049-91	s	METAL, CHIP 1k 5% 1/10W
R128	1-216-089-91	s	METAL, CHIP 47k 5% 1/10W
R129	1-216-089-91	s	METAL, CHIP 47k 5% 1/10W
R130	1-216-073-00	s	METAL, CHIP 10k 5% 1/10W
R135	1-216-049-91	s	METAL, CHIP 1k 5% 1/10W
*3) R136	1-216-049-91	s	METAL, CHIP 1k 5% 1/10W
R137	1-216-049-91	s	METAL, CHIP 1k 5% 1/10W
R138	1-216-049-91	s	METAL, CHIP 1k 5% 1/10W
R139	1-216-049-91	s	METAL, CHIP 1k 5% 1/10W
R140	1-216-049-91	s	METAL, CHIP 1k 5% 1/10W
R141	1-216-049-91	s	METAL, CHIP 1k 5% 1/10W
R142	1-216-049-91	s	METAL, CHIP 1k 5% 1/10W
R143	1-216-073-00	s	METAL, CHIP 10k 5% 1/10W
R144	1-216-073-00	s	METAL, CHIP 10k 5% 1/10W
R145	1-216-073-00	s	METAL, CHIP 10k 5% 1/10W
R146	1-216-049-91	s	METAL, CHIP 1k 5% 1/10W
R147	1-216-295-91	s	RES, CHIP 0
R148	1-216-049-91	s	METAL, CHIP 1k 5% 1/10W
R149	1-216-037-00	s	METAL, CHIP 330 5% 1/10W
R150	1-216-049-91	s	METAL, CHIP 1k 5% 1/10W
R151	1-216-049-91	s	METAL, CHIP 1k 5% 1/10W
R152	1-216-073-00	s	METAL, CHIP 10k 5% 1/10W
R153	1-216-089-91	s	METAL, CHIP 47k 5% 1/10W
R154	1-216-089-91	s	METAL, CHIP 47k 5% 1/10W
R155	1-216-089-91	s	METAL, CHIP 47k 5% 1/10W
R156	1-216-089-91	s	METAL, CHIP 47k 5% 1/10W
R157	1-216-049-91	s	METAL, CHIP 1k 5% 1/10W
R158	1-216-089-91	s	METAL, CHIP 47k 5% 1/10W
R159	1-216-081-00	s	METAL, CHIP 22k 5% 1/10W
R160	1-216-085-00	s	METAL, CHIP 33k 5% 1/10W
R161	1-216-089-91	s	METAL, CHIP 47k 5% 1/10W
R162	1-216-109-00	s	METAL, CHIP 330k 5% 1/10W
*2) R163	1-216-089-91	s	METAL, CHIP 47k 5% 1/10W
R164	1-216-081-00	s	METAL, CHIP 22k 5% 1/10W
R165	1-216-089-91	s	METAL, CHIP 47k 5% 1/10W
R166	1-216-081-00	s	METAL, CHIP 22k 5% 1/10W
R167	1-216-049-91	s	METAL, CHIP 1k 5% 1/10W
R168	1-216-089-91	s	METAL, CHIP 47k 5% 1/10W
R169	1-216-049-91	s	METAL, CHIP 1k 5% 1/10W
R170	1-216-025-91	s	METAL, CHIP 100 5% 1/10W
R171	1-216-089-91	s	METAL, CHIP 47k 5% 1/10W
R172	1-216-025-91	s	METAL, CHIP 100 5% 1/10W
R173	1-216-089-91	s	METAL, CHIP 47k 5% 1/10W
R176	1-216-295-91	s	RES, CHIP 0
R177	1-216-073-00	s	METAL, CHIP 10k 5% 1/10W
R178	1-216-089-91	s	METAL, CHIP 47k 5% 1/10W
R179	1-216-049-91	s	METAL, CHIP 1k 5% 1/10W
R180	1-216-022-00	s	METAL, CHIP 75 5% 1/10W
R181	1-216-022-00	s	METAL, CHIP 75 5% 1/10W
R182	1-216-295-91	s	RES, CHIP 0
R183	1-216-295-91	s	RES, CHIP 0
R201	1-216-049-91	s	METAL, CHIP 1k 5% 1/10W

(SV-184 BOARD; Suffix -11 to 13)

Ref. No. or Q'ty	Part No.	SP	Description	
R202	1-216-049-91	s	METAL, CHIP 1k 5% 1/10W	
R205	1-216-073-00	s	METAL, CHIP 10k 5% 1/10W	
R206	1-216-073-00	s	METAL, CHIP 10k 5% 1/10W	
R207	1-216-073-00	s	METAL, CHIP 10k 5% 1/10W	
R208	1-216-073-00	s	METAL, CHIP 10k 5% 1/10W	
R209	1-216-073-00	s	METAL, CHIP 10k 5% 1/10W	
R210	1-216-073-00	s	METAL, CHIP 10k 5% 1/10W	
R211	1-216-073-00	s	METAL, CHIP 10k 5% 1/10W	
R212	1-216-073-00	s	METAL, CHIP 10k 5% 1/10W	
R213	1-216-089-91	s	METAL, CHIP 47k 5% 1/10W	
R214	1-216-073-00	s	METAL, CHIP 10k 5% 1/10W	
R215	1-216-089-91	s	METAL, CHIP 47k 5% 1/10W	
R216	1-216-089-91	s	METAL, CHIP 47k 5% 1/10W	
R217	1-216-089-91	s	METAL, CHIP 47k 5% 1/10W	
R218	1-216-097-91	s	METAL, CHIP 100k 5% 1/10W	
R219	1-216-097-91	s	METAL, CHIP 100k 5% 1/10W	
R220	1-216-097-91	s	METAL, CHIP 100k 5% 1/10W	
R221	1-216-073-00	s	METAL, CHIP 10k 5% 1/10W	
R222	1-216-073-00	s	METAL, CHIP 10k 5% 1/10W	
R223	1-216-049-91	s	METAL, CHIP 1k 5% 1/10W	
R224	1-216-049-91	s	METAL, CHIP 1k 5% 1/10W	
R225	1-216-049-91	s	METAL, CHIP 1k 5% 1/10W	
R226	1-216-097-91	s	METAL, CHIP 100k 5% 1/10W	
R227	1-216-097-91	s	METAL, CHIP 100k 5% 1/10W	
R228	1-216-097-91	s	METAL, CHIP 100k 5% 1/10W	
R229	1-216-049-91	s	METAL, CHIP 1k 5% 1/10W	
R231	1-216-121-91	s	METAL, CHIP 1M 5% 1/10W	
R232	1-216-049-91	s	METAL, CHIP 1k 5% 1/10W	
R233	1-216-049-91	s	METAL, CHIP 1k 5% 1/10W	
R234	1-216-049-91	s	METAL, CHIP 1k 5% 1/10W	
R235	1-216-049-91	s	METAL, CHIP 1k 5% 1/10W	
R236	1-216-049-91	s	METAL, CHIP 1k 5% 1/10W	
R237	1-216-049-91	s	METAL, CHIP 1k 5% 1/10W	
R238	1-216-081-00	s	METAL, CHIP 22k 5% 1/10W	*1)
	1-216-097-91	s	METAL, CHIP 100k 5% 1/10W	*2)
R239	1-216-081-00	s	METAL, CHIP 22k 5% 1/10W	
R240	1-216-105-91	s	METAL, CHIP 220k 5% 1/10W	
R241	1-216-105-91	s	METAL, CHIP 220k 5% 1/10W	
R242	1-216-073-00	s	METAL, CHIP 10k 5% 1/10W	*1)
R243	1-216-073-00	s	METAL, CHIP 10k 5% 1/10W	*1)
	1-216-295-91	s	RES, CHIP 0	*2)
R244	1-216-049-91	s	METAL, CHIP 1k 5% 1/10W	*1)
	1-216-097-91	s	METAL, CHIP 100k 5% 1/10W	*2)
R245	1-216-081-00	s	METAL, CHIP 22k 5% 1/10W	
R246	1-216-105-91	s	METAL, CHIP 220k 5% 1/10W	
R247	1-216-089-91	s	METAL, CHIP 47k 5% 1/10W	
R248	1-216-089-91	s	METAL, CHIP 47k 5% 1/10W	
R249	1-216-089-91	s	METAL, CHIP 47k 5% 1/10W	
R250	1-216-025-91	s	METAL, CHIP 100 5% 1/10W	
R251	1-216-025-91	s	METAL, CHIP 100 5% 1/10W	
R252	1-216-049-91	s	METAL, CHIP 1k 5% 1/10W	
R253	1-216-049-91	s	METAL, CHIP 1k 5% 1/10W	
R256	1-216-049-91	s	METAL, CHIP 1k 5% 1/10W	
R257	1-216-049-91	s	METAL, CHIP 1k 5% 1/10W	
R258	1-216-049-91	s	METAL, CHIP 1k 5% 1/10W	
R260	1-216-025-91	s	METAL, CHIP 100 5% 1/10W	

(SV-184 BOARD; Suffix -11 to 13)

Ref. No. or Q'ty	Part No.	SP	Description	
R261	1-216-025-91	s	METAL, CHIP 100 5% 1/10W	
R262	1-216-049-91	s	METAL, CHIP 1k 5% 1/10W	
R263	1-216-049-91	s	METAL, CHIP 1k 5% 1/10W	
R264	1-216-049-91	s	METAL, CHIP 1k 5% 1/10W	
R266	1-216-049-91	s	METAL, CHIP 1k 5% 1/10W	
R267	1-216-049-91	s	METAL, CHIP 1k 5% 1/10W	
R268	1-216-049-91	s	METAL, CHIP 1k 5% 1/10W	
R270	1-216-049-91	s	METAL, CHIP 1k 5% 1/10W	*1)
R271	1-216-049-91	s	METAL, CHIP 1k 5% 1/10W	
R272	1-216-049-91	s	METAL, CHIP 1k 5% 1/10W	
R273	1-216-049-91	s	METAL, CHIP 1k 5% 1/10W	
R274	1-216-049-91	s	METAL, CHIP 1k 5% 1/10W	
R275	1-216-049-91	s	METAL, CHIP 1k 5% 1/10W	
R276	1-216-295-91	s	RES, CHIP 0	*1)
	1-216-049-91	s	METAL, CHIP 1k 5% 1/10W	*2)
R277	1-216-295-91	s	RES, CHIP 0	
R278	1-216-295-91	s	RES, CHIP 0	
R279	1-216-089-91	s	METAL, CHIP 47k 5% 1/10W	
R280	1-216-089-91	s	METAL, CHIP 47k 5% 1/10W	
R281	1-216-068-00	s	METAL, CHIP 6.2k 5% 1/10W	
R282	1-216-075-00	s	METAL, CHIP 12k 5% 1/10W	
R283	1-216-068-00	s	METAL, CHIP 6.2k 5% 1/10W	
R284	1-216-295-91	s	RES, CHIP 0	
R285	1-216-295-91	s	RES, CHIP 0	
R286	1-216-097-91	s	METAL, CHIP 100k 5% 1/10W	
R287	1-216-089-91	s	METAL, CHIP 47k 5% 1/10W	
R288	1-216-049-91	s	METAL, CHIP 1k 5% 1/10W	
R289	1-216-089-91	s	METAL, CHIP 47k 5% 1/10W	
R290	1-216-089-91	s	METAL, CHIP 47k 5% 1/10W	
R291	1-216-049-91	s	METAL, CHIP 1k 5% 1/10W	
R292	1-216-049-91	s	METAL, CHIP 1k 5% 1/10W	
R296	1-216-049-91	s	METAL, CHIP 1k 5% 1/10W	
R297	1-216-049-91	s	METAL, CHIP 1k 5% 1/10W	
R315	1-216-073-00	s	METAL, CHIP 10k 5% 1/10W	
R316	1-216-073-00	s	METAL, CHIP 10k 5% 1/10W	
R317	1-216-073-00	s	METAL, CHIP 10k 5% 1/10W	
R318	1-216-073-00	s	METAL, CHIP 10k 5% 1/10W	
R319	1-216-073-00	s	METAL, CHIP 10k 5% 1/10W	
R320	1-216-081-00	s	METAL, CHIP 22k 5% 1/10W	
R321	1-216-073-00	s	METAL, CHIP 10k 5% 1/10W	
R322	1-216-081-00	s	METAL, CHIP 22k 5% 1/10W	
R323	1-216-089-91	s	METAL, CHIP 47k 5% 1/10W	
R324	1-216-089-91	s	METAL, CHIP 47k 5% 1/10W	
R325	1-216-093-00	s	METAL, CHIP 68k 5% 1/10W	*1)
	1-216-057-00	s	METAL, CHIP 2.2k 5% 1/10W	*2)
R327	1-216-073-00	s	METAL, CHIP 10k 5% 1/10W	
R328	1-216-073-00	s	METAL, CHIP 10k 5% 1/10W	
R329	1-216-097-91	s	METAL, CHIP 100k 5% 1/10W	
R330	1-216-089-91	s	METAL, CHIP 47k 5% 1/10W	
R331	1-216-073-00	s	METAL, CHIP 10k 5% 1/10W	
R332	1-216-073-00	s	METAL, CHIP 10k 5% 1/10W	
R333	1-216-073-00	s	METAL, CHIP 10k 5% 1/10W	
R334	1-216-113-00	s	METAL, CHIP 470k 5% 1/10W	*1)
R335	1-216-073-00	s	METAL, CHIP 10k 5% 1/10W	
R336	1-216-089-91	s	METAL, CHIP 47k 5% 1/10W	
R337	1-216-113-00	s	METAL, CHIP 470k 5% 1/10W	
R338	1-216-113-00	s	METAL, CHIP 470k 5% 1/10W	

(SV-184 BOARD; Suffix -11 to 13)

Ref. No. or Q'ty	Part No.	SP	Description
R339	1-216-057-00	s	METAL, CHIP 2.2k 5% 1/10W
R340	1-216-097-91	s	METAL, CHIP 100k 5% 1/10W
R341	1-216-057-00	s	METAL, CHIP 2.2k 5% 1/10W
R342	1-216-057-00	s	METAL, CHIP 2.2k 5% 1/10W
R343	1-216-073-00	s	METAL, CHIP 10k 5% 1/10W
R344	1-216-049-91	s	METAL, CHIP 1k 5% 1/10W
R345	1-216-073-00	s	METAL, CHIP 10k 5% 1/10W
R346	1-216-073-00	s	METAL, CHIP 10k 5% 1/10W
R347	1-216-105-91	s	METAL, CHIP 220k 5% 1/10W
R348	1-216-073-00	s	METAL, CHIP 10k 5% 1/10W
R349	1-215-863-11	s	METAL 100 5% 1W
R350	1-215-863-11	s	METAL 100 5% 1W
R351	1-216-079-00	s	METAL, CHIP 18k 5% 1/10W
R352	1-216-073-00	s	METAL, CHIP 10k 5% 1/10W
R353	1-216-103-00	s	METAL, CHIP 180k 5% 1/10W
R354	1-216-383-11	s	METAL 0.33 5% 3W
R355	1-216-073-00	s	METAL, CHIP 10k 5% 1/10W
R356	1-216-365-00	s	METAL 0.47 5% 2W
R357	1-216-073-00	s	METAL, CHIP 10k 5% 1/10W
R358	1-216-073-00	s	METAL, CHIP 10k 5% 1/10W
R359	1-216-073-00	s	METAL, CHIP 10k 5% 1/10W
R360	1-216-073-00	s	METAL, CHIP 10k 5% 1/10W
R361	1-216-089-91	s	METAL, CHIP 47k 5% 1/10W
R362	1-216-089-91	s	METAL, CHIP 47k 5% 1/10W
R363	1-216-049-91	s	METAL, CHIP 1k 5% 1/10W
R364	1-216-109-00	s	METAL, CHIP 330k 5% 1/10W
R365	1-216-109-00	s	METAL, CHIP 330k 5% 1/10W
R366	1-216-085-00	s	METAL, CHIP 33k 5% 1/10W
R367	1-216-085-00	s	METAL, CHIP 33k 5% 1/10W
R368	1-216-073-00	s	METAL, CHIP 10k 5% 1/10W
R369	1-216-073-00	s	METAL, CHIP 10k 5% 1/10W
R370	1-216-109-00	s	METAL, CHIP 330k 5% 1/10W
R371	1-216-109-00	s	METAL, CHIP 330k 5% 1/10W
R372	1-216-675-11	s	METAL, CHIP 10k 0.5% 1/10W
R373	1-216-675-11	s	METAL, CHIP 10k 0.5% 1/10W
R374	1-216-675-11	s	METAL, CHIP 10k 0.5% 1/10W
R375	1-216-675-11	s	METAL, CHIP 10k 0.5% 1/10W
R376	1-216-675-11	s	METAL, CHIP 10k 0.5% 1/10W
R377	1-216-675-11	s	METAL, CHIP 10k 0.5% 1/10W
R378	1-216-057-00	s	METAL, CHIP 2.2k 5% 1/10W
R379	1-216-057-00	s	METAL, CHIP 2.2k 5% 1/10W
R380	1-216-049-91	s	METAL, CHIP 1k 5% 1/10W
R381	1-216-049-91	s	METAL, CHIP 1k 5% 1/10W
R382	1-216-061-00	s	METAL, CHIP 3.3k 5% 1/10W
R383	1-216-061-00	s	METAL, CHIP 3.3k 5% 1/10W
R384	1-216-121-91	s	METAL, CHIP 1M 5% 1/10W
R385	1-216-121-91	s	METAL, CHIP 1M 5% 1/10W
R386	1-216-049-91	s	METAL, CHIP 1k 5% 1/10W
R387	1-216-049-91	s	METAL, CHIP 1k 5% 1/10W
R388	1-216-073-00	s	METAL, CHIP 10k 5% 1/10W
R389	1-216-073-00	s	METAL, CHIP 10k 5% 1/10W
R390	1-216-049-91	s	METAL, CHIP 1k 5% 1/10W
R391	1-216-049-91	s	METAL, CHIP 1k 5% 1/10W
R392	1-216-049-91	s	METAL, CHIP 1k 5% 1/10W
R393	1-216-073-00	s	METAL, CHIP 10k 5% 1/10W
R394	1-216-049-91	s	METAL, CHIP 1k 5% 1/10W
R395	1-216-049-91	s	METAL, CHIP 1k 5% 1/10W
R396	1-216-073-00	s	METAL, CHIP 10k 5% 1/10W
R397	1-216-049-91	s	METAL, CHIP 1k 5% 1/10W

(SV-184 BOARD; Suffix -11 to 13)

Ref. No. or Q'ty	Part No.	SP	Description
R398	1-215-863-11	s	METAL 100 5% 1W
R399	1-215-863-11	s	METAL 100 5% 1W
R400	1-215-889-00	s	METAL 330 5% 2W
R401	1-215-889-00	s	METAL 330 5% 2W
R402	1-215-889-00	s	METAL 330 5% 2W
R403	1-215-889-00	s	METAL 330 5% 2W
R404	1-215-863-11	s	METAL 100 5% 1W
R405	1-215-863-11	s	METAL 100 5% 1W
R406	1-216-049-91	s	METAL, CHIP 1k 5% 1/10W
R407	1-216-049-91	s	METAL, CHIP 1k 5% 1/10W
R408	1-216-049-91	s	METAL, CHIP 1k 5% 1/10W
R409	1-216-049-91	s	METAL, CHIP 1k 5% 1/10W
R410	1-216-365-00	s	METAL 0.47 5% 2W
R411	1-216-073-00	s	METAL, CHIP 10k 5% 1/10W
R412	1-216-089-91	s	METAL, CHIP 47k 5% 1/10W
R413	1-216-089-91	s	METAL, CHIP 47k 5% 1/10W
R414	1-216-365-00	s	METAL 0.47 5% 2W
R415	1-216-073-00	s	METAL, CHIP 10k 5% 1/10W
R416	1-216-365-00	s	METAL 0.47 5% 2W
R417	1-216-073-00	s	METAL, CHIP 10k 5% 1/10W
R418	1-216-365-00	s	METAL 0.47 5% 2W
R419	1-216-073-00	s	METAL, CHIP 10k 5% 1/10W
R420	1-216-073-00	s	METAL, CHIP 10k 5% 1/10W
R421	1-216-073-00	s	METAL, CHIP 10k 5% 1/10W
R422	1-216-089-91	s	METAL, CHIP 47k 5% 1/10W
R423	1-216-073-00	s	METAL, CHIP 10k 5% 1/10W
R424	1-216-089-91	s	METAL, CHIP 47k 5% 1/10W
R425	1-216-073-00	s	METAL, CHIP 10k 5% 1/10W
R426	1-216-089-91	s	METAL, CHIP 47k 5% 1/10W
R427	1-216-073-00	s	METAL, CHIP 10k 5% 1/10W
R428	1-216-089-91	s	METAL, CHIP 47k 5% 1/10W
R429	1-216-073-00	s	METAL, CHIP 10k 5% 1/10W
R430	1-216-089-91	s	METAL, CHIP 47k 5% 1/10W
R431	1-216-089-91	s	METAL, CHIP 47k 5% 1/10W
R432	1-216-073-00	s	METAL, CHIP 10k 5% 1/10W
R433	1-216-073-00	s	METAL, CHIP 10k 5% 1/10W
R434	1-216-365-00	s	METAL 0.47 5% 2W
R435	1-216-089-91	s	METAL, CHIP 47k 5% 1/10W
R436	1-216-089-91	s	METAL, CHIP 47k 5% 1/10W
R437	1-216-089-91	s	METAL, CHIP 47k 5% 1/10W
R438	1-216-365-00	s	METAL 0.47 5% 2W
R439	1-216-089-91	s	METAL, CHIP 47k 5% 1/10W
R440	1-216-001-00	s	METAL, CHIP 10 5% 1/10W
R441	1-216-097-91	s	METAL, CHIP 100k 5% 1/10W
R442	1-216-686-11	s	METAL, CHIP 30k 0.5% 1/10W
R443	1-216-665-11	s	METAL, CHIP 3.9k 0.5% 1/10W
R444	1-216-648-11	s	METAL, CHIP 750 0.5% 1/10W
R445	1-216-659-11	s	METAL, CHIP 2.2k 0.5% 1/10W
R446	1-216-659-11	s	METAL, CHIP 2.2k 0.5% 1/10W
R447	1-216-691-11	s	METAL, CHIP 47k 0.5% 1/10W
R448	1-216-691-11	s	METAL, CHIP 47k 0.5% 1/10W
R449	1-216-699-11	s	METAL, CHIP 100k 0.5% 1/10W
R450	1-216-675-11	s	METAL, CHIP 10k 0.5% 1/10W
R451	1-216-073-00	s	METAL, CHIP 10k 5% 1/10W
R452	1-218-764-11	s	METAL, CHIP 330k 0.5% 1/10W
R453	1-216-073-00	s	METAL, CHIP 10k 5% 1/10W
R454	1-216-073-00	s	METAL, CHIP 10k 5% 1/10W
R455	1-215-866-11	s	METAL 330 5% 1W
R456	1-216-057-00	s	METAL, CHIP 2.2k 5% 1/10W

(SV-184 BOARD; Suffix -11 to 13)

Ref. No. or Q'ty	Part No.	SP	Description	
R457	1-216-025-91	s	METAL, CHIP 100 5% 1/10W	
R458	1-218-764-11	s	METAL, CHIP 330k 0.5% 1/10W	
R460	1-218-764-11	s	METAL, CHIP 330k 0.5% 1/10W	
R461	1-216-049-91	s	METAL, CHIP 1k 5% 1/10W	
R462	1-216-073-00	s	METAL, CHIP 10k 5% 1/10W	
R463	1-216-073-00	s	METAL, CHIP 10k 5% 1/10W	
R464	1-216-073-00	s	METAL, CHIP 10k 5% 1/10W	
R465	1-216-073-00	s	METAL, CHIP 10k 5% 1/10W	
R466	1-216-073-00	s	METAL, CHIP 10k 5% 1/10W	
R467	1-216-073-00	s	METAL, CHIP 10k 5% 1/10W	
R468	1-216-025-91	s	METAL, CHIP 100 5% 1/10W	
R469	1-216-105-91	s	METAL, CHIP 220k 5% 1/10W	
R470	1-216-025-91	s	METAL, CHIP 100 5% 1/10W	
R471	1-215-863-11	s	METAL 100 5% 1W	
R472	1-215-867-00	s	METAL 470 5% 1W	
R473	1-215-868-00	s	METAL 680 5% 1W	
R474	1-216-383-11	s	METAL 0.33 5% 3W	
R475	1-216-383-11	s	METAL 0.33 5% 3W	
R476	1-216-383-11	s	METAL 0.33 5% 3W	
R477	1-216-061-00	s	METAL, CHIP 3.3k 5% 1/10W	
R478	1-216-385-11	s	METAL 0.47 5% 3W	
R479	1-216-073-00	s	METAL, CHIP 10k 5% 1/10W	
R480	1-216-073-00	s	METAL, CHIP 10k 5% 1/10W	
R481	1-216-073-00	s	METAL, CHIP 10k 5% 1/10W	
R482	1-216-097-91	s	METAL, CHIP 100k 5% 1/10W	
R500	1-216-065-91	s	METAL, CHIP 4.7k 5% 1/10W	*2)
R501	1-216-065-91	s	METAL, CHIP 4.7k 5% 1/10W	*2)
R502	1-216-113-00	s	METAL, CHIP 470k 5% 1/10W	*2)
R503	1-216-097-91	s	METAL, CHIP 100k 5% 1/10W	*2)
R504	1-216-073-00	s	METAL, CHIP 10k 5% 1/10W	*2)
R505	1-216-065-91	s	METAL, CHIP 4.7k 5% 1/10W	*4)
R506	1-216-065-91	s	METAL, CHIP 4.7k 5% 1/10W	*4)
R507	1-216-073-00	s	METAL, CHIP 10k 5% 1/10W	*4)
R508	1-216-097-91	s	METAL, CHIP 100k 5% 1/10W	*4)
R509	1-216-073-00	s	METAL, CHIP 10k 5% 1/10W	*4)
R510	1-216-073-00	s	METAL, CHIP 10k 5% 1/10W	*4)
R511	1-216-097-91	s	METAL, CHIP 100k 5% 1/10W	*4)
R512	1-216-073-00	s	METAL, CHIP 10k 5% 1/10W	*4)
R513	1-216-073-00	s	METAL, CHIP 10k 5% 1/10W	*4)
R514	1-216-097-91	s	METAL, CHIP 100k 5% 1/10W	*4)
R515	1-216-073-00	s	METAL, CHIP 10k 5% 1/10W	*4)
R516	1-216-073-00	s	METAL, CHIP 10k 5% 1/10W	*4)
R517	1-216-097-91	s	METAL, CHIP 100k 5% 1/10W	*4)
R518	1-216-073-00	s	METAL, CHIP 10k 5% 1/10W	*4)
RB1	1-239-308-11	s	RESISTOR BLOCK, CHIP 47k x 8	
RB102	1-239-308-11	s	RESISTOR BLOCK, CHIP 47k x 8	
RB103	1-239-308-11	s	RESISTOR BLOCK, CHIP 47k x 8	
RB201	1-239-389-11	s	RESISTOR BLOCK, CHIP 47k x 4	
S101	1-692-536-11	s	SWITCH, DIP, CHIP 8-CKT	
S201	1-692-535-11	s	SWITCH, DIP, CHIP 4-CKT	
X1	1-579-996-21	s	RESONATOR, CERAMIC 20.00MHz	
X101	1-579-996-21	s	RESONATOR, CERAMIC 20.00MHz	
X201	1-579-996-21	s	RESONATOR, CERAMIC 20.00MHz	

SY-241B BOARD

Ref. No.
or Q'ty Part No. SP Description

The parts marked * are different, depending on the product serial numbers, as shown below:

*1) Serial number; 10001 through 10120 (For DSR-60 J)
Serial number; 10001 through 10180 (For DSR-60 UC)
Serial number; 10001 through 10250 (For DSR-60P CE)
*2) Serial number; 10121 and higher (For DSR-60 J)
Serial number; 10181 and higher (For DSR-60 UC)
Serial number; 10251 and higher (For DSR-60P CE)
*3) Serial number; 10001 through 10420 (For DSR-60 J)
Serial number; 10001 through 10280 (For DSR-60 UC)
Serial number; 10001 through 10350 (For DSR-60P CE)
*4) Serial number; 10421 and higher (For DSR-60 J)
Serial number; 10281 and higher (For DSR-60 UC)
Serial number; 10351 and higher (For DSR-60P CE)
*5) Serial number; 10001 through 10620 (For DSR-60 J)
Serial number; 10001 through 10540 (For DSR-60 UC)
Serial number; 10001 through 10800 (For DSR-60P CE)
*6) Serial number; 10621 and higher (For DSR-60 J)
Serial number; 10541 and higher (For DSR-60 UC)
Serial number; 10801 and higher (For DSR-60P CE)

Ref. No. or Q'ty	Part No.	SP	Description
1pc	A-8312-953-A	s	MOUNTED CIRCUIT BOARD, SY-241B
1pc	7-621-759-45	s	+PSW, 2.6x6
1pc	3-179-084-01	s	LEVER (R), PRINTED CIRCUIT BOARD
1pc	3-179-085-01	s	LEVER (L), PRINTED CIRCUIT BOARD
C101	1-163-038-91	s	CERAMIC, CHIP 0.1uF 25V
C102	1-163-038-91	s	CERAMIC, CHIP 0.1uF 25V
C103	1-163-038-91	s	CERAMIC, CHIP 0.1uF 25V
C104	1-126-947-11	s	ELECT 47uF 20% 35V
C105	1-126-933-11	s	ELECT 100uF 20% 16V
C106	1-126-933-11	s	ELECT 100uF 20% 16V
C107	1-126-933-11	s	ELECT 100uF 20% 16V
C108	1-163-038-91	s	CERAMIC, CHIP 0.1uF 25V
C109	1-163-038-91	s	CERAMIC, CHIP 0.1uF 25V
C110	1-163-038-91	s	CERAMIC, CHIP 0.1uF 25V
C111	1-126-933-11	s	ELECT 100uF 20% 16V
C112	1-107-689-21	s	TANTALUM, CHIP 1uF 20% 35V
C113	1-163-038-91	s	CERAMIC, CHIP 0.1uF 25V
C114	1-163-038-91	s	CERAMIC, CHIP 0.1uF 25V
C115	1-163-251-11	s	CERAMIC, CHIP 100pF 5% 50V
C116	1-163-038-91	s	CERAMIC, CHIP 0.1uF 25V
C117	1-163-038-91	s	CERAMIC, CHIP 0.1uF 25V
C118	1-163-038-91	s	CERAMIC, CHIP 0.1uF 25V
C119	1-163-038-91	s	CERAMIC, CHIP 0.1uF 25V
C120	1-163-227-11	s	CERAMIC, CHIP 10pF 5% 50V
C121	1-163-227-11	s	CERAMIC, CHIP 10pF 5% 50V
C122	1-163-038-91	s	CERAMIC, CHIP 0.1uF 25V
C123	1-104-664-11	s	ELECT 47uF 20% 25V
C124	1-163-038-91	s	CERAMIC, CHIP 0.1uF 25V
C125	1-163-038-91	s	CERAMIC, CHIP 0.1uF 25V
C126	1-163-038-91	s	CERAMIC, CHIP 0.1uF 25V
C127	1-163-038-91	s	CERAMIC, CHIP 0.1uF 25V
C128	1-163-038-91	s	CERAMIC, CHIP 0.1uF 25V
C201	1-163-038-91	s	CERAMIC, CHIP 0.1uF 25V
C202	1-163-038-91	s	CERAMIC, CHIP 0.1uF 25V
C203	1-163-038-91	s	CERAMIC, CHIP 0.1uF 25V
C204	1-163-038-91	s	CERAMIC, CHIP 0.1uF 25V
C205	1-163-038-91	s	CERAMIC, CHIP 0.1uF 25V
C206	1-163-038-91	s	CERAMIC, CHIP 0.1uF 25V
C207	1-163-038-91	s	CERAMIC, CHIP 0.1uF 25V
C208	1-163-038-91	s	CERAMIC, CHIP 0.1uF 25V

(SY-241B BOARD)

Ref. No. or Q'ty	Part No.	SP	Description	
C209	1-163-038-91	s	CERAMIC, CHIP 0.1uF 25V	
C210	1-163-038-91	s	CERAMIC, CHIP 0.1uF 25V	
C213	1-163-038-91	s	CERAMIC, CHIP 0.1uF 25V	
C214	1-163-038-91	s	CERAMIC, CHIP 0.1uF 25V	
C301	1-163-133-00	s	CERAMIC, CHIP 470pF 5% 50V	
C302	1-104-664-11	s	ELECT 47uF 20% 25V	
C303	1-163-038-91	s	CERAMIC, CHIP 0.1uF 25V	
C304	1-163-038-91	s	CERAMIC, CHIP 0.1uF 25V	
C305	1-163-038-91	s	CERAMIC, CHIP 0.1uF 25V	
C306	1-163-038-91	s	CERAMIC, CHIP 0.1uF 25V	
C307	1-163-227-11	s	CERAMIC, CHIP 10pF 5% 50V	
C308	1-163-227-11	s	CERAMIC, CHIP 10pF 5% 50V	
C309	1-163-038-91	s	CERAMIC, CHIP 0.1uF 25V	
C310	1-163-038-91	s	CERAMIC, CHIP 0.1uF 25V	
C311	1-163-038-91	s	CERAMIC, CHIP 0.1uF 25V	
C312	1-163-038-91	s	CERAMIC, CHIP 0.1uF 25V	
C313	1-163-038-91	s	CERAMIC, CHIP 0.1uF 25V	
C314	1-163-038-91	s	CERAMIC, CHIP 0.1uF 25V	
C315	1-163-038-91	s	CERAMIC, CHIP 0.1uF 25V	
C316	1-163-038-91	s	CERAMIC, CHIP 0.1uF 25V	
C317	1-163-038-91	s	CERAMIC, CHIP 0.1uF 25V	
C318	1-163-038-91	s	CERAMIC, CHIP 0.1uF 25V	
C319	1-163-038-91	s	CERAMIC, CHIP 0.1uF 25V	
C320	1-163-038-91	s	CERAMIC, CHIP 0.1uF 25V	
C321	1-163-038-91	s	CERAMIC, CHIP 0.1uF 25V	
C322	1-163-038-91	s	CERAMIC, CHIP 0.1uF 25V	
C323	1-163-251-11	s	CERAMIC, CHIP 100pF 5% 50V	*2)
C406	1-163-038-91	s	CERAMIC, CHIP 0.1uF 25V	
C407	1-163-038-91	s	CERAMIC, CHIP 0.1uF 25V	
C411	1-163-038-91	s	CERAMIC, CHIP 0.1uF 25V	
C413	1-163-038-91	s	CERAMIC, CHIP 0.1uF 25V	
C416	1-163-038-91	s	CERAMIC, CHIP 0.1uF 25V	
C417	1-163-251-11	s	CERAMIC, CHIP 100pF 5% 50V	*2)
C418	1-163-251-11	s	CERAMIC, CHIP 100pF 5% 50V	*2)
CN1	1-778-889-11	o	CONNECTOR, BB 34P, FEMALE	
CN2	1-506-486-11	o	CONNECTOR 7P, MALE	*3)
	1-565-879-11	s	CONNECTOR 7P, MALE	*4)
CNI102	1-526-660-21	o	SOCKET, IC 32P	
CNI103	1-526-660-21	o	SOCKET, IC 32P	
CNI316	1-526-660-21	o	SOCKET, IC 32P	
CNI317	1-526-660-21	o	SOCKET, IC 32P	
CV101	1-141-389-11	s	CAP, TRIMMER 50pF	
E101	1-535-881-21	o	TERMINAL, TP	
E301	1-535-881-21	o	TERMINAL, TP	
E302	1-535-881-21	o	TERMINAL, TP	
FB101	1-412-364-11	s	INDUCTOR 0uH	*2)
FL302	1-233-314-11	s	FILTER, NOISE, CHIP	*2)
FL303	1-239-719-11	s	FILTER, NOISE, CHIP	*4)
IC101	8-759-525-99	s	IC HD6437021SC02X	
IC102	8-759-539-75	o	IC M27C1001-70F1-85SY102-V1.31	
IC103	8-759-539-76	o	IC M27C1001-70F1-85SY103-V1.31	
IC104	8-759-479-32	s	IC SN75C1168NS-E05	
IC105	8-759-192-25	s	IC UPD6453GT-635-E2	
IC106	8-759-186-44	s	IC TC74VHC125F	
IC107	8-759-186-47	s	IC TC74VHC138F(EL)	

(SY-241B BOARD)

Ref. No. or Q'ty	Part No.	SP	Description	
IC108	8-759-186-47	s	IC TC74VHC138F(EL)	
IC109	8-759-296-24	s	IC CY7C199-20VC	
IC110	8-759-296-24	s	IC CY7C199-20VC	
IC111	8-759-186-84	s	IC TC74VHC86F(EL)	
IC112	8-759-081-44	s	IC TC74VHC04F	
IC113	8-759-369-92	s	IC M51958AFP600D	
IC114	8-759-074-51	s	IC S-8054HNM-CQ-T1	*6)
IC201	8-759-186-47	s	IC TC74VHC138F(EL)	
IC202	8-759-186-63	s	IC TC74VHC245F(EL)	
IC203	8-759-186-63	s	IC TC74VHC245F(EL)	
IC204	8-759-186-63	s	IC TC74VHC245F(EL)	
IC206	8-759-186-32	s	IC TC74VHC21F	
IC208	8-759-053-58	s	IC IDT6116SA25SO	
IC209	8-759-095-41	s	IC CXD8176AQ	
IC210	8-759-053-58	s	IC IDT6116SA25SO	
IC211	8-759-095-41	s	IC CXD8176AQ	
IC212	8-759-926-69	s	IC SN74HC377ANS	
IC213	8-759-186-77	s	IC TC74VHC541F	
IC214	8-759-186-44	s	IC TC74VHC125F	
IC301	8-759-186-38	s	IC TC74VHC32F(EL)	
IC307	8-759-466-16	s	IC IDT7164S20Y-TL	
IC308	8-759-466-16	s	IC IDT7164S20Y-TL	
IC309	8-759-186-47	s	IC TC74VHC138F(EL)	
IC310	8-759-186-63	s	IC TC74VHC245F(EL)	
IC311	8-759-186-63	s	IC TC74VHC245F(EL)	
IC312	8-759-186-63	s	IC TC74VHC245F(EL)	
IC313	8-759-175-29	s	IC TC74VHC374F	
IC314	8-759-175-29	s	IC TC74VHC374F	
IC315	8-759-525-99	s	IC HD6437021SC02X	
IC316	8-759-539-85	o	IC M27C1001-70F1-60SY316-V1.30	
IC317	8-759-539-86	o	IC M27C1001-70F1-60SY317-V1.30	
IC403	8-759-186-77	s	IC TC74VHC541F	
IC407	8-759-186-38	s	IC TC74VHC32F(EL)	
IC408	8-759-175-29	s	IC TC74VHC374F	
IC409	8-759-186-63	s	IC TC74VHC245F(EL)	
IC413	8-759-175-29	s	IC TC74VHC374F	
IC414	8-759-927-12	s	IC SN74HCT244ANS	
IC415	8-759-272-21	s	IC TC74VHCT541F	
L101	1-412-533-21	s	INDUCTOR 47uH	
L102	1-412-533-21	s	INDUCTOR 47uH	
L103	1-408-779-41	s	INDUCTOR, CHIP 15uH	
PS101 ⚠	1-532-679-00	s	LINK, IC 0.6A	
PS102 ⚠	1-532-675-21	s	LINK, IC 1.5A	
PS103 ⚠	1-532-679-00	s	LINK, IC 0.6A	
Q101	8-729-029-14	s	TRANSISTOR DTC144EUA-T106	
Q401	8-729-029-14	s	TRANSISTOR DTC144EUA-T106	
R101	1-216-295-91	s	RES, CHIP 0	
R102	1-216-089-91	s	METAL, CHIP 47k 5% 1/10W	
R103	1-216-049-91	s	METAL, CHIP 1k 5% 1/10W	
R104	1-216-089-91	s	METAL, CHIP 47k 5% 1/10W	
R105	1-216-049-91	s	METAL, CHIP 1k 5% 1/10W	
R106	1-216-097-91	s	METAL, CHIP 100k 5% 1/10W	
R107	1-216-089-91	s	METAL, CHIP 47k 5% 1/10W	
R108	1-216-097-91	s	METAL, CHIP 100k 5% 1/10W	
R109	1-216-077-00	s	METAL, CHIP 15k 5% 1/10W	
R110	1-216-077-00	s	METAL, CHIP 15k 5% 1/10W	
R111	1-216-097-91	s	METAL, CHIP 100k 5% 1/10W	

(SY-241B BOARD)

Ref. No. or Q'ty	Part No.	SP	Description	
R112	1-216-097-91	s	METAL, CHIP 100k 5% 1/10W	
R113	1-216-689-11	s	METAL, CHIP 39k 0.5% 1/10W	*5)
	1-216-073-00	s	METAL, CHIP 10k 5% 1/10W	*6)
R114	1-216-680-11	s	METAL, CHIP 16k 0.5% 1/10W	*5)
R115	1-216-089-91	s	METAL, CHIP 47k 5% 1/10W	
R116	1-216-295-91	s	RES, CHIP 0	
R117	1-216-089-91	s	METAL, CHIP 47k 5% 1/10W	
R118	1-216-295-91	s	RES, CHIP 0	
R119	1-216-077-00	s	METAL, CHIP 15k 5% 1/10W	
R120	1-216-077-00	s	METAL, CHIP 15k 5% 1/10W	
R121	1-216-097-91	s	METAL, CHIP 100k 5% 1/10W	
R122	1-216-089-91	s	METAL, CHIP 47k 5% 1/10W	
R123	1-216-089-91	s	METAL, CHIP 47k 5% 1/10W	
R124	1-216-097-91	s	METAL, CHIP 100k 5% 1/10W	
R129	1-216-089-91	s	METAL, CHIP 47k 5% 1/10W	
R130	1-216-049-91	s	METAL, CHIP 1k 5% 1/10W	
R131	1-216-049-91	s	METAL, CHIP 1k 5% 1/10W	
R132	1-216-049-91	s	METAL, CHIP 1k 5% 1/10W	
R133	1-216-089-91	s	METAL, CHIP 47k 5% 1/10W	
R134	1-216-089-91	s	METAL, CHIP 47k 5% 1/10W	
R135	1-216-089-91	s	METAL, CHIP 47k 5% 1/10W	
R136	1-216-049-91	s	METAL, CHIP 1k 5% 1/10W	
R137	1-216-049-91	s	METAL, CHIP 1k 5% 1/10W	
R138	1-216-049-91	s	METAL, CHIP 1k 5% 1/10W	
R140	1-216-295-91	s	RES, CHIP 0	
R141	1-216-073-00	s	METAL, CHIP 10k 5% 1/10W	
R142	1-216-089-91	s	METAL, CHIP 47k 5% 1/10W	
R143	1-216-089-91	s	METAL, CHIP 47k 5% 1/10W	
R144	1-216-089-91	s	METAL, CHIP 47k 5% 1/10W	
R145	1-216-089-91	s	METAL, CHIP 47k 5% 1/10W	
R146	1-216-089-91	s	METAL, CHIP 47k 5% 1/10W	
R147	1-216-025-91	s	METAL, CHIP 100 5% 1/10W	
R148	1-216-025-91	s	METAL, CHIP 100 5% 1/10W	
R149	1-216-017-91	s	METAL, CHIP 47 5% 1/10W	*3)
	1-216-025-91	s	METAL, CHIP 100 5% 1/10W	*4)
R201	1-216-089-91	s	METAL, CHIP 47k 5% 1/10W	
R202	1-216-049-91	s	METAL, CHIP 1k 5% 1/10W	
R203	1-216-025-91	s	METAL, CHIP 100 5% 1/10W	
R204	1-216-025-91	s	METAL, CHIP 100 5% 1/10W	
R205	1-216-295-91	s	RES, CHIP 0	*2)
R206	1-216-295-91	s	RES, CHIP 0	*2)
R219	1-216-073-00	s	METAL, CHIP 10k 5% 1/10W	
R220	1-216-089-91	s	METAL, CHIP 47k 5% 1/10W	
R301	1-216-073-00	s	METAL, CHIP 10k 5% 1/10W	
R302	1-216-073-00	s	METAL, CHIP 10k 5% 1/10W	
R303	1-216-089-91	s	METAL, CHIP 47k 5% 1/10W	
R304	1-216-049-91	s	METAL, CHIP 1k 5% 1/10W	
R305	1-216-049-91	s	METAL, CHIP 1k 5% 1/10W	
R306	1-216-049-91	s	METAL, CHIP 1k 5% 1/10W	
R307	1-216-049-91	s	METAL, CHIP 1k 5% 1/10W	
R308	1-216-049-91	s	METAL, CHIP 1k 5% 1/10W	
R309	1-216-089-91	s	METAL, CHIP 47k 5% 1/10W	
R316	1-216-073-00	s	METAL, CHIP 10k 5% 1/10W	
R317	1-216-073-00	s	METAL, CHIP 10k 5% 1/10W	
R318	1-216-073-00	s	METAL, CHIP 10k 5% 1/10W	
R321	1-216-295-91	s	RES, CHIP 0	

(SY-241B BOARD)

Ref. No. or Q'ty	Part No.	SP	Description	
R324	1-216-295-91	s	RES, CHIP 0	
R325	1-216-089-91	s	METAL, CHIP 47k 5% 1/10W	
R326	1-216-089-91	s	METAL, CHIP 47k 5% 1/10W	
R327	1-216-089-91	s	METAL, CHIP 47k 5% 1/10W	
R328	1-216-089-91	s	METAL, CHIP 47k 5% 1/10W	
R329	1-216-025-91	s	METAL, CHIP 100 5% 1/10W	*3)
	1-216-017-91	s	METAL, CHIP 47 5% 1/10W	*4)
R330	1-216-025-91	s	METAL, CHIP 100 5% 1/10W	*1)
R331	1-216-025-91	s	METAL, CHIP 100 5% 1/10W	*1)
	1-216-017-91	s	METAL, CHIP 47 5% 1/10W	*2)
R332	1-216-022-00	s	METAL, CHIP 75 5% 1/10W	*2)
R405	1-216-089-91	s	METAL, CHIP 47k 5% 1/10W	
R406	1-216-089-91	s	METAL, CHIP 47k 5% 1/10W	
R408	1-216-073-00	s	METAL, CHIP 10k 5% 1/10W	
R413	1-216-073-00	s	METAL, CHIP 10k 5% 1/10W	
R414	1-216-073-00	s	METAL, CHIP 10k 5% 1/10W	
R415	1-216-022-00	s	METAL, CHIP 75 5% 1/10W	*2)
R416	1-216-022-00	s	METAL, CHIP 75 5% 1/10W	*2)
RB101	1-239-308-11	s	RESISTOR BLOCK, CHIP 47k x 8	
RB102	1-239-308-11	s	RESISTOR BLOCK, CHIP 47k x 8	
RB202	1-239-308-11	s	RESISTOR BLOCK, CHIP 47k x 8	
RB204	1-239-999-11	s	RESISTOR BLOCK, CHIP 1k x 4	
RB301	1-239-389-11	s	RESISTOR BLOCK, CHIP 47k x 4	
RB302	1-239-308-11	s	RESISTOR BLOCK, CHIP 47k x 8	
RB303	1-239-998-11	s	RESISTOR BLOCK, CHIP 100 x 4	
RB304	1-239-999-11	s	RESISTOR BLOCK, CHIP 1k x 4	
RB305	1-239-999-11	s	RESISTOR BLOCK, CHIP 1k x 4	
RB306	1-239-999-11	s	RESISTOR BLOCK, CHIP 1k x 4	
RB307	1-239-999-11	s	RESISTOR BLOCK, CHIP 1k x 4	
RB402	1-239-308-11	s	RESISTOR BLOCK, CHIP 47k x 8	
RB406	1-239-999-11	s	RESISTOR BLOCK, CHIP 1k x 4	
RB407	1-239-999-11	s	RESISTOR BLOCK, CHIP 1k x 4	
RB409	1-239-308-11	s	RESISTOR BLOCK, CHIP 47k x 8	
RB410	1-236-908-11	s	RESISTOR BLOCK, CHIP 10k x 4	
RB411	1-236-908-11	s	RESISTOR BLOCK, CHIP 10k x 4	
RB413	1-239-999-11	s	RESISTOR BLOCK, CHIP 1k x 4	
RB414	1-239-999-11	s	RESISTOR BLOCK, CHIP 1k x 4	
S101	1-572-473-11	s	SWITCH, PUSH	
S201	1-692-535-11	s	SWITCH, DIP, CHIP 4-CKT	
X101	1-767-559-11	s	CRYSTAL, CHIP 19.6608MHz	
X301	1-579-996-21	s	RESONATOR, CERAMIC 20.00MHz	

TC-90 BOARD(DSBK-130/130P)

Ref. No. or Q'ty	Part No.	SP	Description
1pc	4-812-134-11	s	RIVET (DIA. 3.5), NYLON
2pcs	7-621-759-45	s	+PSW, 2.6x6
C100	1-124-584-00	s	ELECT 100uF 20% 10V
C101	1-124-584-00	s	ELECT 100uF 20% 10V
C102	1-163-037-11	s	CERAMIC, CHIP 0.022uF 10% 25V
C103	1-163-037-11	s	CERAMIC, CHIP 0.022uF 10% 25V
C104	1-124-261-00	s	ELECT 10uF 20% 50V
C105	1-124-261-00	s	ELECT 10uF 20% 50V
C106	1-128-499-11	s	ELECT 220uF 20% 16V
C107	1-124-584-00	s	ELECT 100uF 20% 10V
C108	1-163-275-11	s	CERAMIC, CHIP 0.001uF 5% 50V
C109	1-163-037-11	s	CERAMIC, CHIP 0.022uF 10% 25V
C110	1-163-021-91	s	CERAMIC, CHIP 0.01uF 10% 50V
C111	1-163-251-11	s	CERAMIC, CHIP 100pF 5% 50V
C112	1-163-037-11	s	CERAMIC, CHIP 0.022uF 10% 25V
C113	1-163-235-11	s	CERAMIC, CHIP 22pF 5% 50V
C114	1-163-235-11	s	CERAMIC, CHIP 22pF 5% 50V
C115	1-163-133-00	s	CERAMIC, CHIP 470pF 5% 50V
C116	1-163-037-11	s	CERAMIC, CHIP 0.022uF 10% 25V
C117	1-163-037-11	s	CERAMIC, CHIP 0.022uF 10% 25V
C118	1-163-037-11	s	CERAMIC, CHIP 0.022uF 10% 25V
C119	1-163-037-11	s	CERAMIC, CHIP 0.022uF 10% 25V
C120	1-163-037-11	s	CERAMIC, CHIP 0.022uF 10% 25V
C121	1-163-037-11	s	CERAMIC, CHIP 0.022uF 10% 25V
C122	1-163-037-11	s	CERAMIC, CHIP 0.022uF 10% 25V
C123	1-163-037-11	s	CERAMIC, CHIP 0.022uF 10% 25V
C124	1-163-037-11	s	CERAMIC, CHIP 0.022uF 10% 25V
CN1	1-778-888-11	o	CONNECTOR, BB 34P, MALE
D100	8-719-941-23	s	DIODE DA204U
D101	8-719-941-23	s	DIODE DA204U
D102	8-719-941-23	s	DIODE DA204U
D103	8-719-941-23	s	DIODE DA204U
D104	8-719-941-23	s	DIODE DA204U
D105	8-719-941-23	s	DIODE DA204U
IC100	8-759-031-84	s	IC SC7S04F
IC101	8-759-100-96	s	IC UPC4558G2
IC102	8-759-186-38	s	IC TC74VHC32F(EL)
IC103	8-759-369-73	s	IC NJM4556AM
IC104	8-759-186-77	s	IC TC74VHC541F
IC105	8-759-700-07	s	IC NJM2903M
IC106	8-759-175-77	s	IC CXD8384Q
IC107	8-759-186-57	s	IC TC74VHC175F
Q100	8-729-028-91	s	TRANSISTOR DTA144EUA-T106
Q101	8-729-028-91	s	TRANSISTOR DTA144EUA-T106
Q102	8-729-422-44	s	TRANSISTOR 2SK663
Q103	8-729-422-44	s	TRANSISTOR 2SK663
R100	1-216-663-11	s	METAL, CHIP 3.3k 0.5% 1/10W
R101	1-216-648-11	s	METAL, CHIP 750 0.5% 1/10W
R102	1-216-089-91	s	METAL, CHIP 47k 5% 1/10W
R103	1-216-691-11	s	METAL, CHIP 47k 0.5% 1/10W
R104	1-216-691-11	s	METAL, CHIP 47k 0.5% 1/10W
R105	1-216-073-00	s	METAL, CHIP 10k 5% 1/10W
R106	1-216-659-11	s	METAL, CHIP 2.2k 0.5% 1/10W
R107	1-216-659-11	s	METAL, CHIP 2.2k 0.5% 1/10W
R108	1-216-624-11	s	METAL, CHIP 75 0.5% 1/10W
R109	1-216-699-11	s	METAL, CHIP 100k 0.5% 1/10W

(TC-90 BOARD(DSBK-130/130P))

Ref. No. or Q'ty	Part No.	SP	Description
R110	1-216-081-00	s	METAL, CHIP 22k 5% 1/10W
R111	1-216-071-00	s	METAL, CHIP 8.2k 5% 1/10W
R112	1-216-081-00	s	METAL, CHIP 22k 5% 1/10W
R113	1-216-049-91	s	METAL, CHIP 1k 5% 1/10W
R114	1-216-061-00	s	METAL, CHIP 3.3k 5% 1/10W
R115	1-216-699-11	s	METAL, CHIP 100k 0.5% 1/10W
R116	1-216-121-91	s	METAL, CHIP 1M 5% 1/10W
R117	1-216-121-91	s	METAL, CHIP 1M 5% 1/10W
R118	1-216-097-91	s	METAL, CHIP 100k 5% 1/10W
R119	1-216-049-91	s	METAL, CHIP 1k 5% 1/10W
R120	1-216-121-91	s	METAL, CHIP 1M 5% 1/10W
R121	1-216-121-91	s	METAL, CHIP 1M 5% 1/10W
R122	1-216-065-91	s	METAL, CHIP 4.7k 5% 1/10W
R123	1-216-097-91	s	METAL, CHIP 100k 5% 1/10W
R124	1-216-065-91	s	METAL, CHIP 4.7k 5% 1/10W
R125	1-216-065-91	s	METAL, CHIP 4.7k 5% 1/10W
R126	1-216-067-00	s	METAL, CHIP 5.6k 5% 1/10W
R127	1-216-065-91	s	METAL, CHIP 4.7k 5% 1/10W
R128	1-216-025-91	s	METAL, CHIP 100 5% 1/10W
R129	1-216-025-91	s	METAL, CHIP 100 5% 1/10W
R130	1-216-025-91	s	METAL, CHIP 100 5% 1/10W
R131	1-216-089-91	s	METAL, CHIP 47k 5% 1/10W
R132	1-216-025-91	s	METAL, CHIP 100 5% 1/10W
R133	1-216-089-91	s	METAL, CHIP 47k 5% 1/10W
R134	1-216-121-91	s	METAL, CHIP 1M 5% 1/10W
R135	1-216-037-00	s	METAL, CHIP 330 5% 1/10W
R136	1-216-295-91	s	RES, CHIP 0
R137	1-216-295-91	s	RES, CHIP 0
R138	1-216-049-91	s	METAL, CHIP 1k 5% 1/10W
R139	1-216-295-91	s	RES, CHIP 0
R140	1-216-295-91	s	RES, CHIP 0
R141	1-216-089-91	s	METAL, CHIP 47k 5% 1/10W
R142	1-216-089-91	s	METAL, CHIP 47k 5% 1/10W
R143	1-216-089-91	s	METAL, CHIP 47k 5% 1/10W
R144	1-216-089-91	s	METAL, CHIP 47k 5% 1/10W
R145	1-216-089-91	s	METAL, CHIP 47k 5% 1/10W
R146	1-216-089-91	s	METAL, CHIP 47k 5% 1/10W
R147	1-216-089-91	s	METAL, CHIP 47k 5% 1/10W
X100	1-579-993-21	s	CRYSTAL 13.5MHz

TR-93 BOARD

Ref. No. or Q'ty	Part No.	SP	Description
1pc	3-182-257-02	s	HOLDER, DME
CN31	1-566-759-11	o	CONNECTOR 4P, MALE
DM230	8-745-001-07	s	DME DM-230-1

FRAME(DSR-60/60P)

Ref. No. or Q'ty	Part No.	SP	Description
1pc	1-241-577-11	s	RES, VAR, CARBON 20k/20k
2pcs	1-454-337-21	s	SOLENOID
2pcs	1-454-787-12	s	SOLENOID
1pc	⚠ 1-468-214-12	s	REGULATOR, SWITCHING(for J,UC)
1pc	⚠ 1-468-214-22	s	REGULATOR, SWITCHING(for CE)
1pc	1-507-743-21	s	JACK, MINI STEREO
2pcs	1-698-847-12	s	MOTOR, DC (REEL)
1pc	1-698-881-11	s	MOTOR, DC (CAPSTAN)
1pc	1-762-551-11	s	SWITCH, PUSH
1pc	1-801-573-12	s	SENSOR, CONDENSATION
1pc	1-777-531-12	s	WIRE, FLEXIBLE CARD 11P (CN724/FP-75 board to CN714/KY-336B board)
2pcs	1-777-532-11	s	WIRE, FLEXIBLE CARD 36P (CN203/MS-43 board to CN503/MB-713 board) (CN206/MS-43 board to CN506/MB-713 board)
1pc	1-777-533-11	s	WIRE, FLEXIBLE CARD 13P (CN50/CC-75 board to CN505/MB-713 board)
1pc	1-777-534-11	s	WIRE, FLEXIBLE CARD 9P (CN204/MS-43 board to CN11/RM-159 board)
1pc	1-777-537-11	s	WIRE, FLEXIBLE CARD 36P (CN712/KY-336B board to CN702/MB-713 board)
1pc	1-777-731-11	s	WIRE, FLEXIBLE CARD 9P (CN209/MS-43 board to CN15/RM-160 board)
1pc	1-782-418-11	o	CABLE, FLAT 14P (CN201/PRE-39 board to CN801/MB-713 board)

HARNESS, SUB (FG)
(CN12/RM-159 board to CN41/SE-315 board)
(CN16/RM-159 board to CN61/SE-315 board)
2pcs 1-956-616-11 o HARNESS, SUB (FG)

HARNESS, SUB (THREADING)
(CN211/MS-43 board to CN21/PTC-88 board)
1pc 1-956-617-11 o HARNESS, SUB (THREADING)

HARNESS, SUB (HP-MB)
(CN731/HP-73 board to CN701/MB-713 board)
1pc 1-956-618-11 o HARNESS, SUB (HP-MB)

HARNESS, SUB (1TREG)
(CN24/PTC-86 board to CN31/TR-93 board)
1pc 1-956-620-11 o HARNESS, SUB (1TREG)

HARNESS, SUB (TH/UNTH)
(CN221/MS-43 board to CN220/PTC-84 board)
1pc 1-956-623-13 o HARNESS, SUB (TH/UNTH)

HARNESS, SUB (AC SW)
(CN903 and CN904/MB-713 board to CN4 and CN5/switching regulator)
1pc 1-956-621-11 s HARNESS, SUB (AC SW)
S1001 ⚠ 1-570-117-31 s SWITCH, ROCKER

FRAME(DSBK-100/100P)

Ref. No. or Q'ty	Part No.	SP	Description
1pc	1-750-881-11	s	CONNECTOR, BNC-MINI COAX, FEMALE
1pc	1-500-051-11	s	BEAD, FERRITE (DETOUCHABLE)
1pc	1-777-529-11	s	CABLE, COAXIAL
1pc	1-777-529-21	s	CABLE, COAXIAL

FRAME(DSBK-110/110P)

Ref. No. or Q'ty	Part No.	SP	Description
1pc	1-764-448-11	s	CONNECTOR, BNC-MINI COAX, FEMALE
1pc	1-957-801-11	s	HARNESS, SUB (QSDI OUT)

15-4. PACKING MATERIALS & SUPPLIED ACCESSORIES (DSR-80/80P)

SUPPLIED ACCESSORIES(DSR-60/60P)

Ref. No. or Q'ty		Part No.	SP	Description
1pc	⚠	1-551-812-11	s	CORD, POWER 3P(for UC)
1pc	⚠	1-557-161-11	s	CORD, POWER 2P(for J)
1pc	⚠	1-782-929-11	s	CORD, POWER 3P(for CE)
1pc		3-704-355-01	o	SHEET (STANDARD), PROTECTION
1pc		3-800-983-01	s	INSTRUCTION(for J)
1pc		3-859-820-01	s	MANUAL, INSTRUCTION (Japanese, for J)
1pc	⚠	3-859-820-11	s	MANUAL, INSTRUCTION (English, for UC,CE)
1pc		3-859-820-21	s	MANUAL, INSTRUCTION (French, for UC,CE)
1pc		3-859-820-31	s	MANUAL, INSTRUCTION (German, for CE)
1pc		3-859-820-41	s	MANUAL, INSTRUCTION (Italian, for CE)

SUPPLIED ACCESSORIES(DSBK-100/100P)

Ref. No. or Q'ty	Part No.	SP	Description
2pcs	7-621-759-45	s	+PSW, 2.6x6

SUPPLIED ACCESSORIES(DSBK-130/130P)

Ref. No. or Q'ty	Part No.	SP	Description
2pcs	7-621-759-45	s	+PSW, 2.6x6

15-5. OPTIONAL FIXTURES (DSR-60/60P)

Part No.	SP	Description
J-6080-029-A	o	SMALL DENTAL MIRROR
J-6082-373-A	o	DV TORQUE CASSETTE
J-6325-400-A	o	TORQUE DRIVER (3kg/cm)
J-6440-850-A	o	TAPE GUIDE ADJUSTMENT DRIVER
J-6442-570-A	o	REEL TABLE HEIGHT GAUGE
J-6442-470-A	o	REEL TABLE REFERENCE PLATE
J-6442-170-A	o	BREAK TORQUE GAUGE (CW)
J-6442-460-A	o	BREAK TORQUE GAUGE (CCW)
J-6442-610-A	o	EXTENSION BOARD, DJ-259
J-6442-620-A	o	EXTENSION BOARD, DJ-260
J-6443-360-A	o	D COVER
3-184-527-01	o	CLEANING CLOTH
7-651-000-10	o	GREASE, SGL-601 (NET 50g)
7-661-018-18	o	DIAMOND OIL NT-68
7-700-736-06	o	L SHAPED HEXAGON WRENCH (S=0.89mm)
7-700-751-01	o	NUTDRIVER (S=4.5mm)
8-967-999-02	o	ALIGNMENT TAPE, XH2-1AST
8-967-999-21	o	ALIGNMENT TAPE, XH5-1A (for NTSC)
8-967-999-25	o	ALIGNMENT TAPE, XH5-1AP (for PAL)
9-911-053-00	o	THICKNESS GAUGE
9-919-573-01	o	CLEANING LIQUID

15-6. ELECTRICAL PARTS LIST (DSR-80/80P)

CC-75 BOARD

Ref. No. or Q'ty	Part No.	SP	Description
C1	1-164-004-11	s	CERAMIC, CHIP 0.1uF 10% 25V
CN50	1-562-708-11	o	CONNECTOR, FPC 13P
CN51	1-580-472-11	s	CONNECTOR, FPC 5P
CN52	1-506-467-11	s	CONNECTOR 2P, MALE
PH1	8-719-991-24	s	PHOTO-INTERRUPTER GP1S23
PH2	8-719-991-24	s	PHOTO-INTERRUPTER GP1S23
PH3	8-719-991-24	s	PHOTO-INTERRUPTER GP1S23
R1	1-216-031-00	s	METAL, CHIP 180 5% 1/10W
R2	1-216-031-00	s	METAL, CHIP 180 5% 1/10W
R3	1-216-031-00	s	METAL, CHIP 180 5% 1/10W

CC-76 BOARD

Ref. No. or Q'ty	Part No.	SP	Description
CN53	1-750-248-21	o	CONNECTOR, FPC 5P
PH1	8-719-948-58	s	PHOTO-INTERRUPTER GP2S07B
PH2	8-719-948-58	s	PHOTO-INTERRUPTER GP2S07B
PH3	8-719-948-58	s	PHOTO-INTERRUPTER GP2S07B
R1	1-216-031-00	s	METAL, CHIP 180 5% 1/10W
R2	1-216-031-00	s	METAL, CHIP 180 5% 1/10W
R3	1-216-031-00	s	METAL, CHIP 180 5% 1/10W

CP-276A BOARD

Ref. No. or Q'ty	Part No.	SP	Description
1pc	A-8312-906-A	o	MOUNTED CIRCUIT BOARD, CP-276A
C1	1-126-933-11	s	ELECT 100uF 20% 16V
C2	1-126-933-11	s	ELECT 100uF 20% 16V
C3	1-126-964-11	s	ELECT 10uF 20% 50V
C4	1-163-809-11	s	CERAMIC, CHIP 0.047uF 10% 25V
C5	1-163-809-11	s	CERAMIC, CHIP 0.047uF 10% 25V
C6	1-163-809-11	s	CERAMIC, CHIP 0.047uF 10% 25V
C7	1-163-809-11	s	CERAMIC, CHIP 0.047uF 10% 25V
C8	1-163-809-11	s	CERAMIC, CHIP 0.047uF 10% 25V
CN1	1-778-665-11	s	CONNECTOR, BNC, FEMALE
CN2	1-778-665-11	s	CONNECTOR, BNC, FEMALE
CN3	1-778-665-11	s	CONNECTOR, BNC, FEMALE
CN4	1-766-596-11	s	JACK, PIN 1P, FEMALE
CN5	1-573-590-13	s	CONNECTOR, CIRCULAR 4P(S), FEMALE
CN6	1-573-590-13	s	CONNECTOR, CIRCULAR 4P(S), FEMALE
CN601	1-766-790-11	o	CONNECTOR, BB 12P, MALE
CN602	1-766-790-11	o	CONNECTOR, BB 12P, MALE
CN603	1-766-790-11	o	CONNECTOR, BB 12P, MALE
FL1	1-236-129-11	s	FILTER, NOISE
FL2	1-236-058-11	s	FILTER, NOISE
FL3	1-236-058-11	s	FILTER, NOISE
FL4	1-236-129-11	s	FILTER, NOISE
FL5	1-236-129-11	s	FILTER, NOISE
FL6	1-236-129-11	s	FILTER, NOISE
FL7	1-236-129-11	s	FILTER, NOISE
FL8	1-236-129-11	s	FILTER, NOISE
FL9	1-236-129-11	s	FILTER, NOISE
FL10	1-236-129-11	s	FILTER, NOISE
FL11	1-236-058-11	s	FILTER, NOISE
FL12	1-236-129-11	s	FILTER, NOISE
FL13	1-236-129-11	s	FILTER, NOISE
FL14	1-236-129-11	s	FILTER, NOISE
FL15	1-236-129-11	s	FILTER, NOISE
FL16	1-236-129-11	s	FILTER, NOISE
Q1	8-729-117-32	s	TRANSISTOR 2SC4177
Q2	8-729-907-46	s	TRANSISTOR IMZ1
Q3	8-729-904-41	s	TRANSISTOR FMY3
R1	1-216-624-11	s	METAL, CHIP 75 0.5% 1/10W
R2	1-216-624-11	s	METAL, CHIP 75 0.5% 1/10W
R3	1-216-625-11	s	METAL, CHIP 82 0.5% 1/10W
R4	1-216-625-11	s	METAL, CHIP 82 0.5% 1/10W
R5	1-216-025-91	s	METAL, CHIP 100 5% 1/10W
R6	1-216-077-00	s	METAL, CHIP 15k 5% 1/10W
R7	1-216-025-91	s	METAL, CHIP 100 5% 1/10W
R8	1-216-077-00	s	METAL, CHIP 15k 5% 1/10W
R9	1-216-009-00	s	METAL, CHIP 22 5% 1/10W
R10	1-216-045-00	s	METAL, CHIP 680 5% 1/10W
R11	1-216-081-00	s	METAL, CHIP 22k 5% 1/10W
R12	1-216-069-00	s	METAL, CHIP 6.8k 5% 1/10W
R13	1-216-625-11	s	METAL, CHIP 82 0.5% 1/10W
R14	1-216-625-11	s	METAL, CHIP 82 0.5% 1/10W
R15	1-216-625-11	s	METAL, CHIP 82 0.5% 1/10W
R16	1-216-079-00	s	METAL, CHIP 18k 5% 1/10W
R17	1-216-059-00	s	METAL, CHIP 2.7k 5% 1/10W
R18	1-216-045-00	s	METAL, CHIP 680 5% 1/10W
R19	1-216-009-00	s	METAL, CHIP 22 5% 1/10W

(CP-276A BOARD)

Ref. No. or Q'ty	Part No.	SP	Description
S1	1-570-157-51	s	SWITCH, SLIDE
S2	1-570-157-51	s	SWITCH, SLIDE
S3	1-570-157-51	s	SWITCH, SLIDE
S4	1-570-157-51	s	SWITCH, SLIDE

CP-281/281J BOARD

Ref. No. or Q'ty	Part No.	SP	Description
1pc	A-8277-860-A	o	MOUNTED CIRCUIT BOARD, CP-281 [For UC, CE]
1pc	A-8311-078-A	o	MOUNTED CIRCUIT BOARD, CP-281J [For J]
C1	1-164-004-11	s	CERAMIC, CHIP 0.1uF 10% 25V
C2	1-164-004-11	s	CERAMIC, CHIP 0.1uF 10% 25V
C3	1-164-004-11	s	CERAMIC, CHIP 0.1uF 10% 25V
C4	1-164-004-11	s	CERAMIC, CHIP 0.1uF 10% 25V
C51	1-126-935-11	s	ELECT 470uF 20% 16V
C52	1-126-935-11	s	ELECT 470uF 20% 16V
C61	1-126-935-11	s	ELECT 470uF 20% 16V
C62	1-126-935-11	s	ELECT 470uF 20% 16V
C71	1-126-935-11	s	ELECT 470uF 20% 16V
C72	1-126-935-11	s	ELECT 470uF 20% 16V
C81	1-126-935-11	s	ELECT 470uF 20% 16V
C82	1-126-935-11	s	ELECT 470uF 20% 16V
C91	1-124-589-11	s	ELECT 47uF 20% 16V
C92	1-164-004-11	s	CERAMIC, CHIP 0.1uF 10% 25V
C93	1-124-589-11	s	ELECT 47uF 20% 16V
C94	1-164-004-11	s	CERAMIC, CHIP 0.1uF 10% 25V
C100	1-124-242-00	s	ELECT 33uF 20% 25V
C101	1-124-242-00	s	ELECT 33uF 20% 25V
C102	1-124-242-00	s	ELECT 33uF 20% 25V
C103	1-124-242-00	s	ELECT 33uF 20% 25V
C104	1-163-275-11	s	CERAMIC, CHIP 0.001uF 5% 50V
C105	1-163-275-11	s	CERAMIC, CHIP 0.001uF 5% 50V
C106	1-124-242-00	s	ELECT 33uF 20% 25V
C107	1-124-242-00	s	ELECT 33uF 20% 25V
C108	1-163-239-11	s	CERAMIC, CHIP 33pF 5% 50V
C109	1-163-239-11	s	CERAMIC, CHIP 33pF 5% 50V
C110	1-163-239-11	s	CERAMIC, CHIP 33pF 5% 50V
C111	1-163-239-11	s	CERAMIC, CHIP 33pF 5% 50V
C112	1-163-113-00	s	CERAMIC, CHIP 68pF 5% 50V
C113	1-163-113-00	s	CERAMIC, CHIP 68pF 5% 50V
C114	1-163-113-00	s	CERAMIC, CHIP 68pF 5% 50V
C115	1-163-113-00	s	CERAMIC, CHIP 68pF 5% 50V
C116	1-124-242-00	s	ELECT 33uF 20% 25V
C117	1-124-242-00	s	ELECT 33uF 20% 25V
C200	1-124-242-00	s	ELECT 33uF 20% 25V
C201	1-124-242-00	s	ELECT 33uF 20% 25V
C202	1-124-242-00	s	ELECT 33uF 20% 25V
C203	1-124-242-00	s	ELECT 33uF 20% 25V
C204	1-163-275-11	s	CERAMIC, CHIP 0.001uF 5% 50V
C205	1-163-275-11	s	CERAMIC, CHIP 0.001uF 5% 50V
C206	1-124-242-00	s	ELECT 33uF 20% 25V
C207	1-124-242-00	s	ELECT 33uF 20% 25V
C208	1-163-239-11	s	CERAMIC, CHIP 33pF 5% 50V
C209	1-163-239-11	s	CERAMIC, CHIP 33pF 5% 50V
C210	1-163-239-11	s	CERAMIC, CHIP 33pF 5% 50V
C211	1-163-239-11	s	CERAMIC, CHIP 33pF 5% 50V
C212	1-163-113-00	s	CERAMIC, CHIP 68pF 5% 50V
C213	1-163-113-00	s	CERAMIC, CHIP 68pF 5% 50V
C214	1-163-113-00	s	CERAMIC, CHIP 68pF 5% 50V
C215	1-163-113-00	s	CERAMIC, CHIP 68pF 5% 50V
C216	1-124-242-00	s	ELECT 33uF 20% 25V
C217	1-124-242-00	s	ELECT 33uF 20% 25V

(CP-281/281J BOARD)

Ref. No. or Q'ty	Part No.	SP	Description	
CN21	1-750-786-11	s	CONNECTOR, XLR 3P, FEMALE	
CN22	1-750-785-11	s	CONNECTOR, XLR 3P, MALE	
CN23	1-750-786-11	s	CONNECTOR, XLR 3P, FEMALE	[For UC, CE]
CN23	1-750-785-11	s	CONNECTOR, XLR 3P, MALE	[For J]
CN24	1-750-786-11	s	CONNECTOR, XLR 3P, FEMALE	[For UC, CE]
CN24	1-750-785-11	s	CONNECTOR, XLR 3P, MALE	[For J]
CN25	1-750-785-11	s	CONNECTOR, XLR 3P, MALE	[For UC, CE]
CN25	1-750-786-11	s	CONNECTOR, XLR 3P, FEMALE	[For J]
CN26	1-750-785-11	s	CONNECTOR, XLR 3P, MALE	[For UC, CE]
CN26	1-750-786-11	s	CONNECTOR, XLR 3P, FEMALE	[For J]
CN604	1-766-790-11	o	CONNECTOR, BB 12P, MALE	
CN605	1-766-790-11	o	CONNECTOR, BB 12P, MALE	
CN606	1-766-790-11	o	CONNECTOR, BB 12P, MALE	
D100	8-719-941-23	s	DIODE DA204U	
D101	8-719-941-23	s	DIODE DA204U	
D102	8-719-941-23	s	DIODE DA204U	
D103	8-719-941-23	s	DIODE DA204U	
D200	8-719-941-23	s	DIODE DA204U	
D201	8-719-941-23	s	DIODE DA204U	
D202	8-719-941-23	s	DIODE DA204U	
D203	8-719-941-23	s	DIODE DA204U	
FL1	1-236-129-11	s	FILTER, NOISE	
FL2	1-236-129-11	s	FILTER, NOISE	
FL3	1-236-129-11	s	FILTER, NOISE	
FL4	1-236-129-11	s	FILTER, NOISE	
IC100	8-759-106-02	s	IC UPC4570G2	
IC101	8-759-106-02	s	IC UPC4570G2	
IC102	8-759-106-02	s	IC UPC4570G2	
IC103	8-759-106-02	s	IC UPC4570G2	
IC200	8-759-106-02	s	IC UPC4570G2	
IC201	8-759-106-02	s	IC UPC4570G2	
IC202	8-759-106-02	s	IC UPC4570G2	
IC203	8-759-106-02	s	IC UPC4570G2	
R1	1-216-033-00	s	METAL, CHIP 220 5% 1/10W	
R2	1-216-033-00	s	METAL, CHIP 220 5% 1/10W	
R3	1-216-033-00	s	METAL, CHIP 220 5% 1/10W	
R4	1-216-033-00	s	METAL, CHIP 220 5% 1/10W	
R11	1-216-295-91	s	RES, CHIP 0	[For UC, CE]
R12	1-216-295-91	s	RES, CHIP 0	[For UC, CE]
R13	1-216-295-91	s	RES, CHIP 0	[For J]
R14	1-216-295-91	s	RES, CHIP 0	[For J]
R15	1-216-646-11	s	METAL, CHIP 620 0.5% 1/10W	
R21	1-216-295-91	s	RES, CHIP 0	[For UC, CE]
R22	1-216-295-91	s	RES, CHIP 0	[For UC, CE]
R23	1-216-295-91	s	RES, CHIP 0	[For J]
R24	1-216-295-91	s	RES, CHIP 0	[For J]
R25	1-216-646-11	s	METAL, CHIP 620 0.5% 1/10W	
R31	1-216-295-91	s	RES, CHIP 0	[For UC, CE]
R32	1-216-295-91	s	RES, CHIP 0	[For UC, CE]

(CP-281/281J BOARD)

Ref. No. or Q'ty	Part No.	SP	Description	
R33	1-216-295-91	s	RES, CHIP 0	[For J]
R34	1-216-295-91	s	RES, CHIP 0	[For J]
R35	1-216-646-11	s	METAL, CHIP 620 0.5% 1/10W	
R41	1-216-295-91	s	RES, CHIP 0	[For UC, CE]
R42	1-216-295-91	s	RES, CHIP 0	[For UC, CE]
R43	1-216-295-91	s	RES, CHIP 0	[For J]
R44	1-216-295-91	s	RES, CHIP 0	[For J]
R45	1-216-646-11	s	METAL, CHIP 620 0.5% 1/10W	
R52	1-216-295-91	s	RES, CHIP 0	[For UC, CE]
R53	1-216-295-91	s	RES, CHIP 0	[For J]
R54	1-216-295-91	s	RES, CHIP 0	[For J]
R55	1-216-295-91	s	RES, CHIP 0	[For UC, CE]
R62	1-216-295-91	s	RES, CHIP 0	[For UC, CE]
R63	1-216-295-91	s	RES, CHIP 0	[For J]
R64	1-216-295-91	s	RES, CHIP 0	[For J]
R65	1-216-295-91	s	RES, CHIP 0	[For UC, CE]
R72	1-216-295-91	s	RES, CHIP 0	[For UC, CE]
R73	1-216-295-91	s	RES, CHIP 0	[For J]
R74	1-216-295-91	s	RES, CHIP 0	[For J]
R75	1-216-295-91	s	RES, CHIP 0	[For UC, CE]
R82	1-216-295-91	s	RES, CHIP 0	[For UC, CE]
R83	1-216-295-91	s	RES, CHIP 0	[For J]
R84	1-216-295-91	s	RES, CHIP 0	[For J]
R85	1-216-295-91	s	RES, CHIP 0	[For UC, CE]
R100	1-216-667-11	s	METAL, CHIP 4.7k 0.5% 1/10W	
R101	1-216-667-11	s	METAL, CHIP 4.7k 0.5% 1/10W	
R102	1-216-667-11	s	METAL, CHIP 4.7k 0.5% 1/10W	
R103	1-216-667-11	s	METAL, CHIP 4.7k 0.5% 1/10W	
R104	1-216-683-11	s	METAL, CHIP 22k 0.5% 1/10W	
R105	1-216-683-11	s	METAL, CHIP 22k 0.5% 1/10W	
R106	1-216-671-11	s	METAL, CHIP 6.8k 0.5% 1/10W	
R107	1-216-671-11	s	METAL, CHIP 6.8k 0.5% 1/10W	
R108	1-216-669-11	s	METAL, CHIP 5.6k 0.5% 1/10W	
R109	1-216-669-11	s	METAL, CHIP 5.6k 0.5% 1/10W	
R110	1-216-097-91	s	METAL, CHIP 100k 5% 1/10W	
R111	1-216-097-91	s	METAL, CHIP 100k 5% 1/10W	
R112	1-216-097-91	s	METAL, CHIP 100k 5% 1/10W	
R113	1-216-097-91	s	METAL, CHIP 100k 5% 1/10W	
R114	1-216-667-11	s	METAL, CHIP 4.7k 0.5% 1/10W	
R115	1-216-667-11	s	METAL, CHIP 4.7k 0.5% 1/10W	
R116	1-216-651-11	s	METAL, CHIP 1k 0.5% 1/10W	
R117	1-216-651-11	s	METAL, CHIP 1k 0.5% 1/10W	
R118	1-216-651-11	s	METAL, CHIP 1k 0.5% 1/10W	
R119	1-216-651-11	s	METAL, CHIP 1k 0.5% 1/10W	
R120	1-216-651-11	s	METAL, CHIP 1k 0.5% 1/10W	
R121	1-216-651-11	s	METAL, CHIP 1k 0.5% 1/10W	
R122	1-216-651-11	s	METAL, CHIP 1k 0.5% 1/10W	
R123	1-216-651-11	s	METAL, CHIP 1k 0.5% 1/10W	
R124	1-216-651-11	s	METAL, CHIP 1k 0.5% 1/10W	
R125	1-216-651-11	s	METAL, CHIP 1k 0.5% 1/10W	
R126	1-216-651-11	s	METAL, CHIP 1k 0.5% 1/10W	
R127	1-216-651-11	s	METAL, CHIP 1k 0.5% 1/10W	
R128	1-216-025-91	s	METAL, CHIP 100 5% 1/10W	
R129	1-216-057-00	s	METAL, CHIP 2.2k 5% 1/10W	
R130	1-216-025-91	s	METAL, CHIP 100 5% 1/10W	
R131	1-216-057-00	s	METAL, CHIP 2.2k 5% 1/10W	
R151	1-216-671-11	s	METAL, CHIP 6.8k 0.5% 1/10W	
R152	1-216-671-11	s	METAL, CHIP 6.8k 0.5% 1/10W	
R200	1-216-667-11	s	METAL, CHIP 4.7k 0.5% 1/10W	

(CP-281/281J BOARD)

Ref. No. or Q'ty	Part No.	SP	Description
R201	1-216-667-11	s	METAL, CHIP 4.7k 0.5% 1/10W
R202	1-216-667-11	s	METAL, CHIP 4.7k 0.5% 1/10W
R203	1-216-667-11	s	METAL, CHIP 4.7k 0.5% 1/10W
R204	1-216-683-11	s	METAL, CHIP 22k 0.5% 1/10W
R205	1-216-683-11	s	METAL, CHIP 22k 0.5% 1/10W
R206	1-216-671-11	s	METAL, CHIP 6.8k 0.5% 1/10W
R207	1-216-671-11	s	METAL, CHIP 6.8k 0.5% 1/10W
R208	1-216-669-11	s	METAL, CHIP 5.6k 0.5% 1/10W
R209	1-216-669-11	s	METAL, CHIP 5.6k 0.5% 1/10W
R210	1-216-097-91	s	METAL, CHIP 100k 5% 1/10W
R211	1-216-097-91	s	METAL, CHIP 100k 5% 1/10W
R212	1-216-097-91	s	METAL, CHIP 100k 5% 1/10W
R213	1-216-097-91	s	METAL, CHIP 100k 5% 1/10W
R214	1-216-667-11	s	METAL, CHIP 4.7k 0.5% 1/10W
R215	1-216-667-11	s	METAL, CHIP 4.7k 0.5% 1/10W
R216	1-216-651-11	s	METAL, CHIP 1k 0.5% 1/10W
R217	1-216-651-11	s	METAL, CHIP 1k 0.5% 1/10W
R218	1-216-651-11	s	METAL, CHIP 1k 0.5% 1/10W
R219	1-216-651-11	s	METAL, CHIP 1k 0.5% 1/10W
R220	1-216-651-11	s	METAL, CHIP 1k 0.5% 1/10W
R221	1-216-651-11	s	METAL, CHIP 1k 0.5% 1/10W
R222	1-216-651-11	s	METAL, CHIP 1k 0.5% 1/10W
R223	1-216-651-11	s	METAL, CHIP 1k 0.5% 1/10W
R224	1-216-651-11	s	METAL, CHIP 1k 0.5% 1/10W
R225	1-216-651-11	s	METAL, CHIP 1k 0.5% 1/10W
R226	1-216-651-11	s	METAL, CHIP 1k 0.5% 1/10W
R227	1-216-651-11	s	METAL, CHIP 1k 0.5% 1/10W
R228	1-216-025-91	s	METAL, CHIP 100 5% 1/10W
R229	1-216-057-00	s	METAL, CHIP 2.2k 5% 1/10W
R230	1-216-025-91	s	METAL, CHIP 100 5% 1/10W
R231	1-216-057-00	s	METAL, CHIP 2.2k 5% 1/10W
R251	1-216-671-11	s	METAL, CHIP 6.8k 0.5% 1/10W
R252	1-216-671-11	s	METAL, CHIP 6.8k 0.5% 1/10W
S1	1-570-157-11	s	SWITCH, SLIDE
S2	1-570-157-11	s	SWITCH, SLIDE
S3	1-570-157-11	s	SWITCH, SLIDE
S4	1-570-157-11	s	SWITCH, SLIDE
S100	1-692-505-11	s	SWITCH, SLIDE
S101	1-692-505-11	s	SWITCH, SLIDE
S200	1-692-505-11	s	SWITCH, SLIDE
S201	1-692-505-11	s	SWITCH, SLIDE
T1	1-437-194-21	s	TRANSFORMER, PULSE
T2	1-437-194-21	s	TRANSFORMER, PULSE
T3	1-437-194-21	s	TRANSFORMER, PULSE
T4	1-437-194-21	s	TRANSFORMER, PULSE

DA-119 BOARD; Suffix -13, 14

This list corresponds to the board suffix numbers -13 and -14.

Ref. No. or Q'ty	Part No.	SP	Description
1pc	A-8315-280-B	s	MOUNTED CIRCUIT BOARD, DA-119
1pc	7-621-759-45	s	+PSW, 2.6x6
1pc	3-179-084-01	s	LEVER (R), PRINTED CIRCUIT BOARD
1pc	3-179-085-01	s	LEVER (L), PRINTED CIRCUIT BOARD
C12	1-163-038-91	s	CERAMIC, CHIP 0.1uF 25V
C13	1-163-038-91	s	CERAMIC, CHIP 0.1uF 25V
C15	1-163-038-91	s	CERAMIC, CHIP 0.1uF 25V
C16	1-163-251-11	s	CERAMIC, CHIP 100pF 5% 50V
C17	1-163-251-11	s	CERAMIC, CHIP 100pF 5% 50V
C18	1-126-394-11	s	ELECT, CHIP 10uF 20% 16V
C19	1-126-394-11	s	ELECT, CHIP 10uF 20% 16V
C20	1-126-394-11	s	ELECT, CHIP 10uF 20% 16V
C21	1-126-394-11	s	ELECT, CHIP 10uF 20% 16V
C22	1-163-038-91	s	CERAMIC, CHIP 0.1uF 25V
C23	1-163-038-91	s	CERAMIC, CHIP 0.1uF 25V
C24	1-163-038-91	s	CERAMIC, CHIP 0.1uF 25V
C25	1-163-038-91	s	CERAMIC, CHIP 0.1uF 25V
C26	1-163-038-91	s	CERAMIC, CHIP 0.1uF 25V
C27	1-163-038-91	s	CERAMIC, CHIP 0.1uF 25V
C28	1-163-038-91	s	CERAMIC, CHIP 0.1uF 25V
C29	1-163-038-91	s	CERAMIC, CHIP 0.1uF 25V
C30	1-126-396-11	s	ELECT, CHIP 47uF 20% 16V
C31	1-126-394-11	s	ELECT, CHIP 10uF 20% 16V
C32	1-126-394-11	s	ELECT, CHIP 10uF 20% 16V
C33	1-126-396-11	s	ELECT, CHIP 47uF 20% 16V
C36	1-126-396-11	s	ELECT, CHIP 47uF 20% 16V
C51	1-163-038-91	s	CERAMIC, CHIP 0.1uF 25V
C52	1-163-038-91	s	CERAMIC, CHIP 0.1uF 25V
C53	1-163-038-91	s	CERAMIC, CHIP 0.1uF 25V
C54	1-163-038-91	s	CERAMIC, CHIP 0.1uF 25V
C55	1-163-038-91	s	CERAMIC, CHIP 0.1uF 25V
C56	1-163-038-91	s	CERAMIC, CHIP 0.1uF 25V
C57	1-163-038-91	s	CERAMIC, CHIP 0.1uF 25V
C58	1-163-038-91	s	CERAMIC, CHIP 0.1uF 25V
C59	1-163-038-91	s	CERAMIC, CHIP 0.1uF 25V
C60	1-163-038-91	s	CERAMIC, CHIP 0.1uF 25V
C61	1-126-394-11	s	ELECT, CHIP 10uF 20% 16V
C62	1-163-235-11	s	CERAMIC, CHIP 22pF 5% 50V
C101	1-163-113-00	s	CERAMIC, CHIP 68pF 5% 50V
C102	1-163-113-00	s	CERAMIC, CHIP 68pF 5% 50V
C103	1-163-113-00	s	CERAMIC, CHIP 68pF 5% 50V
C104	1-163-113-00	s	CERAMIC, CHIP 68pF 5% 50V
C105	1-163-113-00	s	CERAMIC, CHIP 68pF 5% 50V
C106	1-163-113-00	s	CERAMIC, CHIP 68pF 5% 50V
C107	1-163-113-00	s	CERAMIC, CHIP 68pF 5% 50V
C108	1-163-113-00	s	CERAMIC, CHIP 68pF 5% 50V
C109	1-126-397-11	s	ELECT, CHIP 33uF 20% 25V
C110	1-126-397-11	s	ELECT, CHIP 33uF 20% 25V
C111	1-126-397-11	s	ELECT, CHIP 33uF 20% 25V
C112	1-126-397-11	s	ELECT, CHIP 33uF 20% 25V
C113	1-126-395-11	s	ELECT, CHIP 22uF 20% 16V
C114	1-126-395-11	s	ELECT, CHIP 22uF 20% 16V
C115	1-126-391-11	s	ELECT, CHIP 47uF 20% 6.3V
C116	1-126-391-11	s	ELECT, CHIP 47uF 20% 6.3V
C117	1-126-391-11	s	ELECT, CHIP 47uF 20% 6.3V

(DA-119 BOARD; Suffix -13, 14)

Ref. No. or Q'ty	Part No.	SP	Description
C118	1-126-395-11	s	ELECT, CHIP 22uF 20% 16V
C119	1-126-391-11	s	ELECT, CHIP 47uF 20% 6.3V
C120	1-126-395-11	s	ELECT, CHIP 22uF 20% 16V
C121	1-126-391-11	s	ELECT, CHIP 47uF 20% 6.3V
C122	1-126-391-11	s	ELECT, CHIP 47uF 20% 6.3V
C123	1-126-391-11	s	ELECT, CHIP 47uF 20% 6.3V
C124	1-126-391-11	s	ELECT, CHIP 47uF 20% 6.3V
C125	1-163-251-11	s	CERAMIC, CHIP 100pF 5% 50V
C126	1-163-251-11	s	CERAMIC, CHIP 100pF 5% 50V
C127	1-163-259-91	s	CERAMIC, CHIP 220pF 5% 50V
C128	1-163-251-11	s	CERAMIC, CHIP 100pF 5% 50V
C129	1-163-259-91	s	CERAMIC, CHIP 220pF 5% 50V
C130	1-163-251-11	s	CERAMIC, CHIP 100pF 5% 50V
C131	1-163-259-91	s	CERAMIC, CHIP 220pF 5% 50V
C132	1-163-259-91	s	CERAMIC, CHIP 220pF 5% 50V
C133	1-126-394-11	s	ELECT, CHIP 10uF 20% 16V
C134	1-126-394-11	s	ELECT, CHIP 10uF 20% 16V
C135	1-126-391-11	s	ELECT, CHIP 47uF 20% 6.3V
C136	1-126-391-11	s	ELECT, CHIP 47uF 20% 6.3V
C137	1-163-038-91	s	CERAMIC, CHIP 0.1uF 25V
C138	1-163-038-91	s	CERAMIC, CHIP 0.1uF 25V
C139	1-163-017-00	s	CERAMIC, CHIP 0.0047uF 5% 50V
C140	1-163-017-00	s	CERAMIC, CHIP 0.0047uF 5% 50V
C141	1-163-017-00	s	CERAMIC, CHIP 0.0047uF 5% 50V
C142	1-163-017-00	s	CERAMIC, CHIP 0.0047uF 5% 50V
C143	1-163-017-00	s	CERAMIC, CHIP 0.0047uF 5% 50V
C144	1-163-017-00	s	CERAMIC, CHIP 0.0047uF 5% 50V
C145	1-163-017-00	s	CERAMIC, CHIP 0.0047uF 5% 50V
C146	1-163-017-00	s	CERAMIC, CHIP 0.0047uF 5% 50V
C147	1-126-391-11	s	ELECT, CHIP 47uF 20% 6.3V
C148	1-126-391-11	s	ELECT, CHIP 47uF 20% 6.3V
C149	1-126-391-11	s	ELECT, CHIP 47uF 20% 6.3V
C150	1-126-391-11	s	ELECT, CHIP 47uF 20% 6.3V
C151	1-126-391-11	s	ELECT, CHIP 47uF 20% 6.3V
C152	1-126-391-11	s	ELECT, CHIP 47uF 20% 6.3V
C153	1-163-038-91	s	CERAMIC, CHIP 0.1uF 25V
C154	1-163-038-91	s	CERAMIC, CHIP 0.1uF 25V
C155	1-126-391-11	s	ELECT, CHIP 47uF 20% 6.3V
C156	1-126-391-11	s	ELECT, CHIP 47uF 20% 6.3V
C157	1-163-038-91	s	CERAMIC, CHIP 0.1uF 25V
C158	1-163-038-91	s	CERAMIC, CHIP 0.1uF 25V
C159	1-163-038-91	s	CERAMIC, CHIP 0.1uF 25V
C160	1-163-038-91	s	CERAMIC, CHIP 0.1uF 25V
C161	1-126-394-11	s	ELECT, CHIP 10uF 20% 16V
C162	1-163-038-91	s	CERAMIC, CHIP 0.1uF 25V
C163	1-163-038-91	s	CERAMIC, CHIP 0.1uF 25V
C164	1-163-038-91	s	CERAMIC, CHIP 0.1uF 25V
C165	1-163-038-91	s	CERAMIC, CHIP 0.1uF 25V
C166	1-126-394-11	s	ELECT, CHIP 10uF 20% 16V
C167	1-163-038-91	s	CERAMIC, CHIP 0.1uF 25V
C168	1-163-251-11	s	CERAMIC, CHIP 100pF 5% 50V
C169	1-163-251-11	s	CERAMIC, CHIP 100pF 5% 50V
C170	1-163-251-11	s	CERAMIC, CHIP 100pF 5% 50V
C171	1-163-251-11	s	CERAMIC, CHIP 100pF 5% 50V
C172	1-163-121-00	s	CERAMIC, CHIP 150pF 5% 50V
C173	1-163-121-00	s	CERAMIC, CHIP 150pF 5% 50V
C174	1-163-121-00	s	CERAMIC, CHIP 150pF 5% 50V
C175	1-163-121-00	s	CERAMIC, CHIP 150pF 5% 50V
C176	1-163-038-91	s	CERAMIC, CHIP 0.1uF 25V

(DA-119 BOARD; Suffix -13, 14)

Ref. No. or Q'ty	Part No.	SP	Description
C177	1-163-038-91	s	CERAMIC, CHIP 0.1uF 25V
C178	1-163-038-91	s	CERAMIC, CHIP 0.1uF 25V
C179	1-163-038-91	s	CERAMIC, CHIP 0.1uF 25V
C180	1-163-038-91	s	CERAMIC, CHIP 0.1uF 25V
C201	1-126-394-11	s	ELECT, CHIP 10uF 20% 16V
C202	1-126-394-11	s	ELECT, CHIP 10uF 20% 16V
C203	1-163-038-91	s	CERAMIC, CHIP 0.1uF 25V
C204	1-163-038-91	s	CERAMIC, CHIP 0.1uF 25V
C205	1-163-038-91	s	CERAMIC, CHIP 0.1uF 25V
C206	1-163-038-91	s	CERAMIC, CHIP 0.1uF 25V
C207	1-163-038-91	s	CERAMIC, CHIP 0.1uF 25V
C208	1-163-038-91	s	CERAMIC, CHIP 0.1uF 25V
C209	1-163-038-91	s	CERAMIC, CHIP 0.1uF 25V
C210	1-163-038-91	s	CERAMIC, CHIP 0.1uF 25V
C211	1-163-038-91	s	CERAMIC, CHIP 0.1uF 25V
C212	1-163-038-91	s	CERAMIC, CHIP 0.1uF 25V
C213	1-163-038-91	s	CERAMIC, CHIP 0.1uF 25V
C214	1-163-038-91	s	CERAMIC, CHIP 0.1uF 25V
C215	1-163-038-91	s	CERAMIC, CHIP 0.1uF 25V
C220	1-126-394-11	s	ELECT, CHIP 10uF 20% 16V
C222	1-163-038-91	s	CERAMIC, CHIP 0.1uF 25V
C225	1-163-038-91	s	CERAMIC, CHIP 0.1uF 25V
C227	1-163-038-91	s	CERAMIC, CHIP 0.1uF 25V
C231	1-163-038-91	s	CERAMIC, CHIP 0.1uF 25V
C234	1-163-038-91	s	CERAMIC, CHIP 0.1uF 25V
C237	1-163-038-91	s	CERAMIC, CHIP 0.1uF 25V
C239	1-163-038-91	s	CERAMIC, CHIP 0.1uF 25V
C241	1-163-038-91	s	CERAMIC, CHIP 0.1uF 25V
C243	1-163-038-91	s	CERAMIC, CHIP 0.1uF 25V
C245	1-163-038-91	s	CERAMIC, CHIP 0.1uF 25V
C301	1-163-038-91	s	CERAMIC, CHIP 0.1uF 25V
C302	1-163-038-91	s	CERAMIC, CHIP 0.1uF 25V
C303	1-163-038-91	s	CERAMIC, CHIP 0.1uF 25V
C304	1-163-038-91	s	CERAMIC, CHIP 0.1uF 25V
C305	1-163-038-91	s	CERAMIC, CHIP 0.1uF 25V
C306	1-163-038-91	s	CERAMIC, CHIP 0.1uF 25V
C307	1-163-038-91	s	CERAMIC, CHIP 0.1uF 25V
C308	1-163-038-91	s	CERAMIC, CHIP 0.1uF 25V
C309	1-163-038-91	s	CERAMIC, CHIP 0.1uF 25V
C310	1-163-038-91	s	CERAMIC, CHIP 0.1uF 25V
C311	1-126-394-11	s	ELECT, CHIP 10uF 20% 16V
C312	1-163-038-91	s	CERAMIC, CHIP 0.1uF 25V
C313	1-163-038-91	s	CERAMIC, CHIP 0.1uF 25V
C314	1-126-394-11	s	ELECT, CHIP 10uF 20% 16V
C315	1-163-038-91	s	CERAMIC, CHIP 0.1uF 25V
C316	1-163-038-91	s	CERAMIC, CHIP 0.1uF 25V
C317	1-163-038-91	s	CERAMIC, CHIP 0.1uF 25V
C318	1-163-038-91	s	CERAMIC, CHIP 0.1uF 25V
C321	1-163-038-91	s	CERAMIC, CHIP 0.1uF 25V
C322	1-163-038-91	s	CERAMIC, CHIP 0.1uF 25V
C323	1-163-038-91	s	CERAMIC, CHIP 0.1uF 25V
C324	1-163-038-91	s	CERAMIC, CHIP 0.1uF 25V
C326	1-163-038-91	s	CERAMIC, CHIP 0.1uF 25V
C328	1-163-038-91	s	CERAMIC, CHIP 0.1uF 25V
C329	1-163-038-91	s	CERAMIC, CHIP 0.1uF 25V
C330	1-163-038-91	s	CERAMIC, CHIP 0.1uF 25V
C331	1-163-038-91	s	CERAMIC, CHIP 0.1uF 25V
C332	1-163-038-91	s	CERAMIC, CHIP 0.1uF 25V
C333	1-163-038-91	s	CERAMIC, CHIP 0.1uF 25V

(DA-119 BOARD; Suffix -13, 14)

Ref. No. or Q'ty	Part No.	SP	Description
C334	1-163-038-91	s	CERAMIC, CHIP 0.1uF 25V
C335	1-164-346-11	s	CERAMIC, CHIP 1uF 16V
C336	1-107-687-11	s	TANTALUM, CHIP 3.3uF 20% 20V
C337	1-107-687-11	s	TANTALUM, CHIP 3.3uF 20% 20V
C338	1-163-038-91	s	CERAMIC, CHIP 0.1uF 25V
C339	1-163-038-91	s	CERAMIC, CHIP 0.1uF 25V
C340	1-163-038-91	s	CERAMIC, CHIP 0.1uF 25V
C341	1-163-038-91	s	CERAMIC, CHIP 0.1uF 25V
C342	1-163-038-91	s	CERAMIC, CHIP 0.1uF 25V
C343	1-163-038-91	s	CERAMIC, CHIP 0.1uF 25V
C344	1-163-038-91	s	CERAMIC, CHIP 0.1uF 25V
C345	1-163-251-11	s	CERAMIC, CHIP 100pF 5% 50V
C346	1-163-038-91	s	CERAMIC, CHIP 0.1uF 25V
C347	1-163-251-11	s	CERAMIC, CHIP 100pF 5% 50V
C348	1-163-038-91	s	CERAMIC, CHIP 0.1uF 25V
C349	1-163-038-91	s	CERAMIC, CHIP 0.1uF 25V
C350	1-163-275-11	s	CERAMIC, CHIP 0.001uF 5% 50V
C351	1-163-275-11	s	CERAMIC, CHIP 0.001uF 5% 50V
C352	1-163-275-11	s	CERAMIC, CHIP 0.001uF 5% 50V
C353	1-163-275-11	s	CERAMIC, CHIP 0.001uF 5% 50V
C354	1-163-038-91	s	CERAMIC, CHIP 0.1uF 25V
C355	1-163-038-91	s	CERAMIC, CHIP 0.1uF 25V
C356	1-163-038-91	s	CERAMIC, CHIP 0.1uF 25V
C357	1-163-038-91	s	CERAMIC, CHIP 0.1uF 25V
C358	1-163-038-91	s	CERAMIC, CHIP 0.1uF 25V
C359	1-163-038-91	s	CERAMIC, CHIP 0.1uF 25V
C362	1-163-038-91	s	CERAMIC, CHIP 0.1uF 25V
C363	1-163-038-91	s	CERAMIC, CHIP 0.1uF 25V
C401	1-126-394-11	s	ELECT, CHIP 10uF 20% 16V
C402	1-126-394-11	s	ELECT, CHIP 10uF 20% 16V
C403	1-163-038-91	s	CERAMIC, CHIP 0.1uF 25V
C405	1-163-038-91	s	CERAMIC, CHIP 0.1uF 25V
C406	1-163-038-91	s	CERAMIC, CHIP 0.1uF 25V
C407	1-163-038-91	s	CERAMIC, CHIP 0.1uF 25V
C408	1-163-038-91	s	CERAMIC, CHIP 0.1uF 25V
C409	1-163-038-91	s	CERAMIC, CHIP 0.1uF 25V
C410	1-163-038-91	s	CERAMIC, CHIP 0.1uF 25V
C411	1-163-038-91	s	CERAMIC, CHIP 0.1uF 25V
C412	1-163-038-91	s	CERAMIC, CHIP 0.1uF 25V
C413	1-163-038-91	s	CERAMIC, CHIP 0.1uF 25V
C415	1-163-038-91	s	CERAMIC, CHIP 0.1uF 25V
C417	1-126-394-11	s	ELECT, CHIP 10uF 20% 16V
C420	1-163-038-91	s	CERAMIC, CHIP 0.1uF 25V
C426	1-163-038-91	s	CERAMIC, CHIP 0.1uF 25V
C427	1-163-038-91	s	CERAMIC, CHIP 0.1uF 25V
C428	1-163-038-91	s	CERAMIC, CHIP 0.1uF 25V
C430	1-163-038-91	s	CERAMIC, CHIP 0.1uF 25V
C434	1-163-038-91	s	CERAMIC, CHIP 0.1uF 25V
C435	1-163-038-91	s	CERAMIC, CHIP 0.1uF 25V
C437	1-163-038-91	s	CERAMIC, CHIP 0.1uF 25V
C440	1-163-038-91	s	CERAMIC, CHIP 0.1uF 25V
C441	1-163-038-91	s	CERAMIC, CHIP 0.1uF 25V
C447	1-163-038-91	s	CERAMIC, CHIP 0.1uF 25V
C501	1-163-038-91	s	CERAMIC, CHIP 0.1uF 25V
C502	1-163-038-91	s	CERAMIC, CHIP 0.1uF 25V
C503	1-163-038-91	s	CERAMIC, CHIP 0.1uF 25V
C504	1-163-038-91	s	CERAMIC, CHIP 0.1uF 25V
C505	1-163-038-91	s	CERAMIC, CHIP 0.1uF 25V
C506	1-163-038-91	s	CERAMIC, CHIP 0.1uF 25V

(DA-119 BOARD; Suffix -13, 14)

Ref. No. or Q'ty	Part No.	SP	Description
C507	1-163-038-91	s	CERAMIC, CHIP 0.1uF 25V
C508	1-163-038-91	s	CERAMIC, CHIP 0.1uF 25V
C509	1-163-038-91	s	CERAMIC, CHIP 0.1uF 25V
C510	1-163-038-91	s	CERAMIC, CHIP 0.1uF 25V
C511	1-163-038-91	s	CERAMIC, CHIP 0.1uF 25V
C512	1-163-235-11	s	CERAMIC, CHIP 22pF 5% 50V
C514	1-126-394-11	s	ELECT, CHIP 10uF 20% 16V
C516	1-163-038-91	s	CERAMIC, CHIP 0.1uF 25V
C518	1-163-038-91	s	CERAMIC, CHIP 0.1uF 25V
C519	1-163-038-91	s	CERAMIC, CHIP 0.1uF 25V
C520	1-163-038-91	s	CERAMIC, CHIP 0.1uF 25V
C521	1-107-687-11	s	TANTALUM, CHIP 3.3uF 20% 20V
C522	1-164-346-11	s	CERAMIC, CHIP 1uF 16V
C523	1-107-687-11	s	TANTALUM, CHIP 3.3uF 20% 20V
C525	1-163-038-91	s	CERAMIC, CHIP 0.1uF 25V
C526	1-163-038-91	s	CERAMIC, CHIP 0.1uF 25V
C527	1-163-038-91	s	CERAMIC, CHIP 0.1uF 25V
C528	1-163-038-91	s	CERAMIC, CHIP 0.1uF 25V
C529	1-163-038-91	s	CERAMIC, CHIP 0.1uF 25V
C530	1-163-038-91	s	CERAMIC, CHIP 0.1uF 25V
C531	1-163-038-91	s	CERAMIC, CHIP 0.1uF 25V
C532	1-163-251-11	s	CERAMIC, CHIP 100pF 5% 50V
C533	1-163-038-91	s	CERAMIC, CHIP 0.1uF 25V
C534	1-163-251-11	s	CERAMIC, CHIP 100pF 5% 50V
C535	1-163-038-91	s	CERAMIC, CHIP 0.1uF 25V
C536	1-163-038-91	s	CERAMIC, CHIP 0.1uF 25V
C537	1-163-275-11	s	CERAMIC, CHIP 0.001uF 5% 50V
C538	1-163-275-11	s	CERAMIC, CHIP 0.001uF 5% 50V
C539	1-163-275-11	s	CERAMIC, CHIP 0.001uF 5% 50V
C540	1-163-275-11	s	CERAMIC, CHIP 0.001uF 5% 50V
C541	1-163-038-91	s	CERAMIC, CHIP 0.1uF 25V
C542	1-163-038-91	s	CERAMIC, CHIP 0.1uF 25V
C543	1-163-038-91	s	CERAMIC, CHIP 0.1uF 25V
C544	1-163-038-91	s	CERAMIC, CHIP 0.1uF 25V
C545	1-163-038-91	s	CERAMIC, CHIP 0.1uF 25V
C546	1-163-038-91	s	CERAMIC, CHIP 0.1uF 25V
C547	1-163-038-91	s	CERAMIC, CHIP 0.1uF 25V
C551	1-163-038-91	s	CERAMIC, CHIP 0.1uF 25V
C553	1-163-038-91	s	CERAMIC, CHIP 0.1uF 25V
C554	1-163-038-91	s	CERAMIC, CHIP 0.1uF 25V
C555	1-163-038-91	s	CERAMIC, CHIP 0.1uF 25V
C556	1-163-038-91	s	CERAMIC, CHIP 0.1uF 25V
C557	1-163-038-91	s	CERAMIC, CHIP 0.1uF 25V
C558	1-163-038-91	s	CERAMIC, CHIP 0.1uF 25V
C559	1-163-038-91	s	CERAMIC, CHIP 0.1uF 25V
C560	1-163-038-91	s	CERAMIC, CHIP 0.1uF 25V
C561	1-163-038-91	s	CERAMIC, CHIP 0.1uF 25V
C562	1-163-038-91	s	CERAMIC, CHIP 0.1uF 25V
C563	1-163-038-91	s	CERAMIC, CHIP 0.1uF 25V
C564	1-126-394-11	s	ELECT, CHIP 10uF 20% 16V
C566	1-163-038-91	s	CERAMIC, CHIP 0.1uF 25V
C567	1-163-038-91	s	CERAMIC, CHIP 0.1uF 25V
C568	1-163-038-91	s	CERAMIC, CHIP 0.1uF 25V
C569	1-163-038-91	s	CERAMIC, CHIP 0.1uF 25V
C570	1-163-038-91	s	CERAMIC, CHIP 0.1uF 25V
C571	1-163-038-91	s	CERAMIC, CHIP 0.1uF 25V
C572	1-163-038-91	s	CERAMIC, CHIP 0.1uF 25V
C573	1-163-038-91	s	CERAMIC, CHIP 0.1uF 25V
C574	1-126-394-11	s	ELECT, CHIP 10uF 20% 16V

(DA-119 BOARD; Suffix -13, 14)

Ref. No. or Q'ty	Part No.	SP	Description
C575	1-163-038-91	s	CERAMIC, CHIP 0.1uF 25V
C576	1-163-038-91	s	CERAMIC, CHIP 0.1uF 25V
C577	1-163-038-91	s	CERAMIC, CHIP 0.1uF 25V
C578	1-163-038-91	s	CERAMIC, CHIP 0.1uF 25V
C579	1-163-038-91	s	CERAMIC, CHIP 0.1uF 25V
C580	1-163-038-91	s	CERAMIC, CHIP 0.1uF 25V
C581	1-126-396-11	s	ELECT, CHIP 47uF 20% 16V
C582	1-126-396-11	s	ELECT, CHIP 47uF 20% 16V
C583	1-163-038-91	s	CERAMIC, CHIP 0.1uF 25V
C584	1-163-038-91	s	CERAMIC, CHIP 0.1uF 25V
C585	1-163-038-91	s	CERAMIC, CHIP 0.1uF 25V
C586	1-163-038-91	s	CERAMIC, CHIP 0.1uF 25V
C587	1-126-396-11	s	ELECT, CHIP 47uF 20% 16V
C588	1-163-038-91	s	CERAMIC, CHIP 0.1uF 25V
C589	1-163-038-91	s	CERAMIC, CHIP 0.1uF 25V
C590	1-126-396-11	s	ELECT, CHIP 47uF 20% 16V
C591	1-163-038-91	s	CERAMIC, CHIP 0.1uF 25V
C592	1-163-038-91	s	CERAMIC, CHIP 0.1uF 25V
C601	1-163-251-11	s	CERAMIC, CHIP 100pF 5% 50V
C602	1-163-251-11	s	CERAMIC, CHIP 100pF 5% 50V
C603	1-163-251-11	s	CERAMIC, CHIP 100pF 5% 50V
C604	1-163-251-11	s	CERAMIC, CHIP 100pF 5% 50V
C605	1-163-139-00	s	CERAMIC, CHIP 820pF 5% 50V
C606	1-163-251-11	s	CERAMIC, CHIP 100pF 5% 50V
C607	1-126-396-11	s	ELECT, CHIP 47uF 20% 16V
C608	1-163-251-11	s	CERAMIC, CHIP 100pF 5% 50V
C609	1-126-400-11	s	ELECT, CHIP 22uF 20% 35V
C610	1-126-400-11	s	ELECT, CHIP 22uF 20% 35V
C611	1-163-235-11	s	CERAMIC, CHIP 22pF 5% 50V
C612	1-163-235-11	s	CERAMIC, CHIP 22pF 5% 50V
C613	1-126-400-11	s	ELECT, CHIP 22uF 20% 35V
C614	1-163-251-11	s	CERAMIC, CHIP 100pF 5% 50V
C615	1-163-251-11	s	CERAMIC, CHIP 100pF 5% 50V
C617	1-126-400-11	s	ELECT, CHIP 22uF 20% 35V
C619	1-126-394-11	s	ELECT, CHIP 10uF 20% 16V
C620	1-126-394-11	s	ELECT, CHIP 10uF 20% 16V
C621	1-163-275-11	s	CERAMIC, CHIP 0.001uF 5% 50V
C622	1-163-038-91	s	CERAMIC, CHIP 0.1uF 25V
C623	1-163-038-91	s	CERAMIC, CHIP 0.1uF 25V
C624	1-163-038-91	s	CERAMIC, CHIP 0.1uF 25V
C625	1-163-235-11	s	CERAMIC, CHIP 22pF 5% 50V
C701	1-163-251-11	s	CERAMIC, CHIP 100pF 5% 50V
C702	1-163-251-11	s	CERAMIC, CHIP 100pF 5% 50V
C703	1-163-251-11	s	CERAMIC, CHIP 100pF 5% 50V
C704	1-163-251-11	s	CERAMIC, CHIP 100pF 5% 50V
C705	1-163-139-00	s	CERAMIC, CHIP 820pF 5% 50V
C706	1-163-251-11	s	CERAMIC, CHIP 100pF 5% 50V
C707	1-126-396-11	s	ELECT, CHIP 47uF 20% 16V
C708	1-163-251-11	s	CERAMIC, CHIP 100pF 5% 50V
C709	1-126-400-11	s	ELECT, CHIP 22uF 20% 35V
C710	1-126-400-11	s	ELECT, CHIP 22uF 20% 35V
C711	1-163-235-11	s	CERAMIC, CHIP 22pF 5% 50V
C712	1-163-235-11	s	CERAMIC, CHIP 22pF 5% 50V
C713	1-126-400-11	s	ELECT, CHIP 22uF 20% 35V
C714	1-163-251-11	s	CERAMIC, CHIP 100pF 5% 50V
C715	1-163-251-11	s	CERAMIC, CHIP 100pF 5% 50V
C717	1-126-400-11	s	ELECT, CHIP 22uF 20% 35V
C719	1-163-275-11	s	CERAMIC, CHIP 0.001uF 5% 50V
C720	1-126-394-11	s	ELECT, CHIP 10uF 20% 16V

(DA-119 BOARD; Suffix -13, 14)

Ref. No. or Q'ty	Part No.	SP	Description
C721	1-126-394-11	s	ELECT, CHIP 10uF 20% 16V
C722	1-163-038-91	s	CERAMIC, CHIP 0.1uF 25V
C723	1-163-038-91	s	CERAMIC, CHIP 0.1uF 25V
C724	1-163-038-91	s	CERAMIC, CHIP 0.1uF 25V
C725	1-163-235-11	s	CERAMIC, CHIP 22pF 5% 50V
C801	1-163-251-11	s	CERAMIC, CHIP 100pF 5% 50V
C802	1-163-251-11	s	CERAMIC, CHIP 100pF 5% 50V
C803	1-163-251-11	s	CERAMIC, CHIP 100pF 5% 50V
C804	1-163-251-11	s	CERAMIC, CHIP 100pF 5% 50V
C805	1-163-139-00	s	CERAMIC, CHIP 820pF 5% 50V
C806	1-163-251-11	s	CERAMIC, CHIP 100pF 5% 50V
C807	1-126-396-11	s	ELECT, CHIP 47uF 20% 16V
C808	1-163-251-11	s	CERAMIC, CHIP 100pF 5% 50V
C809	1-126-400-11	s	ELECT, CHIP 22uF 20% 35V
C810	1-126-400-11	s	ELECT, CHIP 22uF 20% 35V
C811	1-163-235-11	s	CERAMIC, CHIP 22pF 5% 50V
C812	1-163-235-11	s	CERAMIC, CHIP 22pF 5% 50V
C813	1-126-400-11	s	ELECT, CHIP 22uF 20% 35V
C814	1-163-251-11	s	CERAMIC, CHIP 100pF 5% 50V
C815	1-163-251-11	s	CERAMIC, CHIP 100pF 5% 50V
C817	1-126-400-11	s	ELECT, CHIP 22uF 20% 35V
C819	1-163-275-11	s	CERAMIC, CHIP 0.001uF 5% 50V
C820	1-126-394-11	s	ELECT, CHIP 10uF 20% 16V
C821	1-126-394-11	s	ELECT, CHIP 10uF 20% 16V
C822	1-163-038-91	s	CERAMIC, CHIP 0.1uF 25V
C823	1-163-038-91	s	CERAMIC, CHIP 0.1uF 25V
C824	1-163-038-91	s	CERAMIC, CHIP 0.1uF 25V
C825	1-163-235-11	s	CERAMIC, CHIP 22pF 5% 50V
C901	1-163-251-11	s	CERAMIC, CHIP 100pF 5% 50V
C902	1-163-251-11	s	CERAMIC, CHIP 100pF 5% 50V
C903	1-163-251-11	s	CERAMIC, CHIP 100pF 5% 50V
C904	1-163-251-11	s	CERAMIC, CHIP 100pF 5% 50V
C905	1-163-139-00	s	CERAMIC, CHIP 820pF 5% 50V
C906	1-163-251-11	s	CERAMIC, CHIP 100pF 5% 50V
C907	1-126-396-11	s	ELECT, CHIP 47uF 20% 16V
C908	1-163-251-11	s	CERAMIC, CHIP 100pF 5% 50V
C909	1-126-400-11	s	ELECT, CHIP 22uF 20% 35V
C910	1-126-400-11	s	ELECT, CHIP 22uF 20% 35V
C911	1-163-235-11	s	CERAMIC, CHIP 22pF 5% 50V
C912	1-163-235-11	s	CERAMIC, CHIP 22pF 5% 50V
C913	1-126-400-11	s	ELECT, CHIP 22uF 20% 35V
C914	1-163-251-11	s	CERAMIC, CHIP 100pF 5% 50V
C915	1-163-251-11	s	CERAMIC, CHIP 100pF 5% 50V
C916	1-126-400-11	s	ELECT, CHIP 22uF 20% 35V
C919	1-163-275-11	s	CERAMIC, CHIP 0.001uF 5% 50V
C920	1-126-394-11	s	ELECT, CHIP 10uF 20% 16V
C921	1-126-394-11	s	ELECT, CHIP 10uF 20% 16V
C922	1-163-038-91	s	CERAMIC, CHIP 0.1uF 25V
C923	1-163-038-91	s	CERAMIC, CHIP 0.1uF 25V
C924	1-163-038-91	s	CERAMIC, CHIP 0.1uF 25V
C925	1-163-235-11	s	CERAMIC, CHIP 22pF 5% 50V
D101	8-719-989-22	s	LED CL-150R-CD, RED
D102	8-719-989-22	s	LED CL-150R-CD, RED
D103	8-719-989-22	s	LED CL-150R-CD, RED
D104	8-719-989-22	s	LED CL-150R-CD, RED
D301	8-719-041-39	s	DIODE KV1470
D302	8-719-041-39	s	DIODE KV1470
D501	8-719-041-39	s	DIODE KV1470

(DA-119 BOARD; Suffix -13, 14)

Ref. No. or Q'ty	Part No.	SP	Description
D502	8-719-041-39	s	DIODE KV1470
D601	8-719-801-48	s	DIODE 1SS193
D602	8-719-820-41	s	DIODE 1SS302
D603	8-719-820-41	s	DIODE 1SS302
D701	8-719-801-48	s	DIODE 1SS193
D702	8-719-820-41	s	DIODE 1SS302
D703	8-719-820-41	s	DIODE 1SS302
D801	8-719-801-48	s	DIODE 1SS193
D802	8-719-820-41	s	DIODE 1SS302
D803	8-719-820-41	s	DIODE 1SS302
D901	8-719-801-48	s	DIODE 1SS193
D902	8-719-820-41	s	DIODE 1SS302
D903	8-719-820-41	s	DIODE 1SS302
FL501	1-239-719-11	s	FILTER, NOISE, CHIP
FL502	1-239-719-11	s	FILTER, NOISE, CHIP
IC10	8-759-009-07	s	IC MC14053BF
IC11	8-759-009-06	s	IC MC14052BF
IC12	8-759-702-02	s	IC NJM062M
IC13	8-759-157-17	s	IC PQ05SZ1U
IC14	8-759-172-41	s	IC L78M09T-TL
IC15	8-759-068-03	s	IC NJM79L09UA
IC51	8-752-374-96	s	IC CXD2190R-T6
IC52	8-752-374-96	s	IC CXD2190R-T6
IC53	8-759-337-74	s	IC HM62V256LT8Z
IC54	8-759-337-74	s	IC HM62V256LT8Z
IC55	8-759-523-95	s	IC TC74VHC74FT(EL)
IC56	8-759-271-86	s	IC TC7SH04FU
IC101	8-759-700-94	s	IC NJM5532M
IC102	8-759-700-94	s	IC NJM5532M
IC103	8-759-700-94	s	IC NJM5532M
IC104	8-759-700-94	s	IC NJM5532M
IC105	8-759-357-73	s	IC TL32088CNS-E20
IC106	8-759-357-73	s	IC TL32088CNS-E20
IC107	8-759-357-74	s	IC TLC320AD58CDWR
IC108	8-759-357-74	s	IC TLC320AD58CDWR
IC109	8-759-524-09	s	IC TC74VHC153FT(EL)
IC110	8-759-524-09	s	IC TC74VHC153FT(EL)
IC111	8-759-524-09	s	IC TC74VHC153FT(EL)
IC112	8-759-524-09	s	IC TC74VHC153FT(EL)
IC113	8-759-524-09	s	IC TC74VHC153FT(EL)
IC114	8-759-524-09	s	IC TC74VHC153FT(EL)
IC116	8-759-523-43	s	IC TC74ACT157FT(EL)
IC117	8-759-490-41	s	IC TC74VHCT541AFT(EL)
IC118	8-759-326-71	s	IC CXD8517Q
IC119	8-759-326-71	s	IC CXD8517Q
IC120	8-759-524-19	s	IC TC74VHC164FT(EL)
IC121	8-759-491-46	s	IC TC74VHCT04FT(EL)
IC122	8-759-523-79	s	IC TC74VHC02FT(EL)
IC123	8-759-523-95	s	IC TC74VHC74FT(EL)
IC124	8-759-524-19	s	IC TC74VHC164FT(EL)
IC125	8-759-524-19	s	IC TC74VHC164FT(EL)
IC202	8-759-523-95	s	IC TC74VHC74FT(EL)
IC203	8-759-337-74	s	IC HM62V256LT8Z
IC204	8-759-337-74	s	IC HM62V256LT8Z
IC205	8-759-483-02	s	IC CXD8713Q
IC206	8-759-491-47	s	IC TC74VHCT08AFT(EL)
IC207	8-759-491-45	s	IC TC74VHCT00AFT(EL)
IC301	8-759-523-94	s	IC TC74VHC32FT(EL)

(DA-119 BOARD; Suffix -13, 14)

Ref. No. or Q'ty	Part No.	SP	Description
IC302	8-759-491-47	s	IC TC74VHCT08AFT(EL)
IC303	8-752-352-30	s	IC CXD2705AQ
IC304	8-752-352-30	s	IC CXD2705AQ
IC305	8-759-358-23	s	IC NN514256J-45-T
IC306	8-759-358-23	s	IC NN514256J-45-T
IC307	8-752-374-96	s	IC CXD2190R-T6
IC308	8-752-374-96	s	IC CXD2190R-T6
IC309	8-759-337-74	s	IC HM62V256LT8Z
IC310	8-759-337-74	s	IC HM62V256LT8Z
IC313	8-759-362-16	s	IC CXD2913AQ
IC314	8-759-362-16	s	IC CXD2913AQ
IC315	8-759-702-02	s	IC NJM062M
IC316	8-759-702-02	s	IC NJM062M
IC317	8-759-490-41	s	IC TC74VHCT541AFT(EL)
IC318	8-759-524-09	s	IC TC74VHC153FT(EL)
IC401	8-759-523-78	s	IC TC74VHC00FT(EL)
IC403	8-759-466-16	s	IC IDT7164S20Y-TL
IC406	8-759-337-74	s	IC HM62V256LT8Z
IC408	8-759-337-74	s	IC HM62V256LT8Z
IC412	8-759-524-50	s	IC TC74VHC541FT(EL)
IC501	8-759-186-51	s	IC TC74VHC157FS(EL)
IC502	8-752-374-96	s	IC CXD2190R-T6
IC503	8-752-374-96	s	IC CXD2190R-T6
IC504	8-759-337-74	s	IC HM62V256LT8Z
IC505	8-759-337-74	s	IC HM62V256LT8Z
IC509	8-759-362-16	s	IC CXD2913AQ
IC510	8-759-362-16	s	IC CXD2913AQ
IC511	8-759-702-02	s	IC NJM062M
IC512	8-759-702-02	s	IC NJM062M
IC513	8-759-523-95	s	IC TC74VHC74FT(EL)
IC514	8-759-271-86	s	IC TC7SH04FU
IC515	8-759-524-09	s	IC TC74VHC153FT(EL)
IC551	8-759-490-41	s	IC TC74VHCT541AFT(EL)
IC552	8-759-523-43	s	IC TC74ACT157FT(EL)
IC553	8-752-352-30	s	IC CXD2705AQ
IC554	8-752-352-30	s	IC CXD2705AQ
IC555	8-759-358-23	s	IC NN514256J-45-T
IC556	8-759-358-23	s	IC NN514256J-45-T
IC557	8-759-326-71	s	IC CXD8517Q
IC558	8-759-326-71	s	IC CXD8517Q
IC559	8-759-523-78	s	IC TC74VHC00FT(EL)
IC560	8-759-523-95	s	IC TC74VHC74FT(EL)
IC561	8-759-523-95	s	IC TC74VHC74FT(EL)
IC562	8-759-524-50	s	IC TC74VHC541FT(EL)
IC563	8-759-524-19	s	IC TC74VHC164FT(EL)
IC564	8-759-524-19	s	IC TC74VHC164FT(EL)
IC565	8-759-523-79	s	IC TC74VHC02FT(EL)
IC581	8-759-173-51	s	IC SM5872AS-ET
IC582	8-759-173-51	s	IC SM5872AS-ET
IC601	8-759-745-64	s	IC NJM4560M
IC602	8-759-745-64	s	IC NJM4560M
IC603	8-759-745-64	s	IC NJM4560M
IC604	8-759-745-64	s	IC NJM4560M
IC605	8-759-521-14	s	IC NJM5532S-D
IC701	8-759-745-64	s	IC NJM4560M
IC703	8-759-745-64	s	IC NJM4560M
IC704	8-759-745-64	s	IC NJM4560M
IC705	8-759-521-14	s	IC NJM5532S-D
IC801	8-759-745-64	s	IC NJM4560M

(DA-119 BOARD; Suffix -13, 14)

Ref. No. or Q'ty	Part No.	SP	Description
IC802	8-759-702-02	s	IC NJM062M
IC803	8-759-702-02	s	IC NJM062M
IC804	8-759-702-02	s	IC NJM062M
IC805	8-759-521-14	s	IC NJM5532S-D
IC901	8-759-745-64	s	IC NJM4560M
IC903	8-759-702-02	s	IC NJM062M
IC904	8-759-702-02	s	IC NJM062M
IC905	8-759-521-14	s	IC NJM5532S-D
L51	1-410-381-11	s	INDUCTOR, CHIP 10uH
L101	1-410-381-11	s	INDUCTOR, CHIP 10uH
L102	1-410-381-11	s	INDUCTOR, CHIP 10uH
L103	1-410-381-11	s	INDUCTOR, CHIP 10uH
L104	1-410-381-11	s	INDUCTOR, CHIP 10uH
L105	1-410-381-11	s	INDUCTOR, CHIP 10uH
L106	1-410-381-11	s	INDUCTOR, CHIP 10uH
L201	1-410-381-11	s	INDUCTOR, CHIP 10uH
L202	1-410-381-11	s	INDUCTOR, CHIP 10uH
L204	1-410-381-11	s	INDUCTOR, CHIP 10uH
L301	1-410-381-11	s	INDUCTOR, CHIP 10uH
L303	1-410-381-11	s	INDUCTOR, CHIP 10uH
L304	1-410-381-11	s	INDUCTOR, CHIP 10uH
L305	1-410-381-11	s	INDUCTOR, CHIP 10uH
L308	1-410-381-11	s	INDUCTOR, CHIP 10uH
L309	1-410-381-11	s	INDUCTOR, CHIP 10uH
L312	1-410-381-11	s	INDUCTOR, CHIP 10uH
L313	1-410-381-11	s	INDUCTOR, CHIP 10uH
L401	1-410-381-11	s	INDUCTOR, CHIP 10uH
L402	1-410-381-11	s	INDUCTOR, CHIP 10uH
L403	1-410-381-11	s	INDUCTOR, CHIP 10uH
L404	1-410-381-11	s	INDUCTOR, CHIP 10uH
L501	1-410-381-11	s	INDUCTOR, CHIP 10uH
L503	1-410-381-11	s	INDUCTOR, CHIP 10uH
L504	1-410-381-11	s	INDUCTOR, CHIP 10uH
L507	1-410-381-11	s	INDUCTOR, CHIP 10uH
L508	1-410-381-11	s	INDUCTOR, CHIP 10uH
L552	1-410-381-11	s	INDUCTOR, CHIP 10uH
L554	1-410-381-11	s	INDUCTOR, CHIP 10uH
L555	1-410-381-11	s	INDUCTOR, CHIP 10uH
L556	1-410-381-11	s	INDUCTOR, CHIP 10uH
L557	1-410-381-11	s	INDUCTOR, CHIP 10uH
L558	1-410-381-11	s	INDUCTOR, CHIP 10uH
L581	1-410-381-11	s	INDUCTOR, CHIP 10uH
L582	1-410-381-11	s	INDUCTOR, CHIP 10uH
L583	1-410-381-11	s	INDUCTOR, CHIP 10uH
L584	1-410-381-11	s	INDUCTOR, CHIP 10uH
LV301	1-411-984-11	s	COIL, VAR, CHIP
LV302	1-411-984-11	s	COIL, VAR, CHIP
LV501	1-411-984-11	s	COIL, VAR, CHIP
LV502	1-411-984-11	s	COIL, VAR, CHIP
PS10	⚠ 1-576-124-11	s	LINK, IC, CHIP 1A
PS11	⚠ 1-576-124-11	s	LINK, IC, CHIP 1A
PS12	⚠ 1-576-124-11	s	LINK, IC, CHIP 1A
PS13	⚠ 1-576-124-11	s	LINK, IC, CHIP 1A
PS15	⚠ 1-533-282-21	s	LINK, IC, CHIP 2A
PS16	⚠ 1-533-282-21	s	LINK, IC, CHIP 2A
PS17	⚠ 1-576-124-11	s	LINK, IC, CHIP 1A
Q10	1-801-806-11	s	TRANSISTOR DTC144EKA-T146

(DA-119 BOARD; Suffix -13, 14)

Ref. No. or Q'ty	Part No.	SP	Description
Q11	1-801-806-11	s	TRANSISTOR DTC144EKA-T146
Q12	1-801-806-11	s	TRANSISTOR DTC144EKA-T146
Q13	8-729-027-38	s	TRANSISTOR DTA144EKA-T146
Q14	8-729-117-32	s	TRANSISTOR 2SC4177
Q15	1-801-806-11	s	TRANSISTOR DTC144EKA-T146
Q16	8-729-202-38	s	TRANSISTOR 2SC3326N
Q17	8-729-202-38	s	TRANSISTOR 2SC3326N
Q18	8-729-202-38	s	TRANSISTOR 2SC3326N
Q19	8-729-027-38	s	TRANSISTOR DTA144EKA-T146
Q101	8-729-202-38	s	TRANSISTOR 2SC3326N
Q102	8-729-202-38	s	TRANSISTOR 2SC3326N
Q103	8-729-202-38	s	TRANSISTOR 2SC3326N
Q104	8-729-202-38	s	TRANSISTOR 2SC3326N
Q105	8-729-202-38	s	TRANSISTOR 2SC3326N
Q106	8-729-202-38	s	TRANSISTOR 2SC3326N
Q107	8-729-202-38	s	TRANSISTOR 2SC3326N
Q108	8-729-202-38	s	TRANSISTOR 2SC3326N
Q581	1-801-806-11	s	TRANSISTOR DTC144EKA-T146
Q582	1-801-806-11	s	TRANSISTOR DTC144EKA-T146
Q583	1-801-806-11	s	TRANSISTOR DTC144EKA-T146
Q584	1-801-806-11	s	TRANSISTOR DTC144EKA-T146
Q585	1-801-806-11	s	TRANSISTOR DTC144EKA-T146
Q586	8-729-027-38	s	TRANSISTOR DTA144EKA-T146
Q587	8-729-027-38	s	TRANSISTOR DTA144EKA-T146
Q588	8-729-027-38	s	TRANSISTOR DTA144EKA-T146
Q589	8-729-027-38	s	TRANSISTOR DTA144EKA-T146
Q590	8-729-027-38	s	TRANSISTOR DTA144EKA-T146
Q601	8-729-202-38	s	TRANSISTOR 2SC3326N
Q602	8-729-202-38	s	TRANSISTOR 2SC3326N
Q603	8-729-202-38	s	TRANSISTOR 2SC3326N
Q604	8-729-202-38	s	TRANSISTOR 2SC3326N
Q605	8-729-202-38	s	TRANSISTOR 2SC3326N
Q701	8-729-202-38	s	TRANSISTOR 2SC3326N
Q702	8-729-202-38	s	TRANSISTOR 2SC3326N
Q703	8-729-202-38	s	TRANSISTOR 2SC3326N
Q704	8-729-202-38	s	TRANSISTOR 2SC3326N
Q705	8-729-202-38	s	TRANSISTOR 2SC3326N
Q801	8-729-202-38	s	TRANSISTOR 2SC3326N
Q802	8-729-202-38	s	TRANSISTOR 2SC3326N
Q803	8-729-202-38	s	TRANSISTOR 2SC3326N
Q804	8-729-202-38	s	TRANSISTOR 2SC3326N
Q805	8-729-202-38	s	TRANSISTOR 2SC3326N
Q901	8-729-202-38	s	TRANSISTOR 2SC3326N
Q902	8-729-202-38	s	TRANSISTOR 2SC3326N
Q903	8-729-202-38	s	TRANSISTOR 2SC3326N
Q904	8-729-202-38	s	TRANSISTOR 2SC3326N
Q905	8-729-202-38	s	TRANSISTOR 2SC3326N
R11	1-216-073-00	s	METAL, CHIP 10k 5% 1/10W
R12	1-216-073-00	s	METAL, CHIP 10k 5% 1/10W
R13	1-216-073-00	s	METAL, CHIP 10k 5% 1/10W
R14	1-216-073-00	s	METAL, CHIP 10k 5% 1/10W
R15	1-216-073-00	s	METAL, CHIP 10k 5% 1/10W
R16	1-216-057-00	s	METAL, CHIP 2.2k 5% 1/10W
R17	1-216-057-00	s	METAL, CHIP 2.2k 5% 1/10W
R18	1-216-025-91	s	METAL, CHIP 100 5% 1/10W
R19	1-216-081-00	s	METAL, CHIP 22k 5% 1/10W
R20	1-216-081-00	s	METAL, CHIP 22k 5% 1/10W
R21	1-216-025-91	s	METAL, CHIP 100 5% 1/10W

(DA-119 BOARD; Suffix -13, 14)

Ref. No. or Q'ty	Part No.	SP	Description
R22	1-216-073-00	s	METAL, CHIP 10k 5% 1/10W
R23	1-216-057-00	s	METAL, CHIP 2.2k 5% 1/10W
R24	1-216-025-91	s	METAL, CHIP 100 5% 1/10W
R25	1-216-073-00	s	METAL, CHIP 10k 5% 1/10W
R26	1-216-073-00	s	METAL, CHIP 10k 5% 1/10W
R27	1-216-073-00	s	METAL, CHIP 10k 5% 1/10W
R28	1-216-073-00	s	METAL, CHIP 10k 5% 1/10W
R29	1-216-073-00	s	METAL, CHIP 10k 5% 1/10W
R30	1-216-073-00	s	METAL, CHIP 10k 5% 1/10W
R31	1-216-073-00	s	METAL, CHIP 10k 5% 1/10W
R101	1-208-806-11	s	METAL, CHIP 10k 0.5% 1/10W
R102	1-208-806-11	s	METAL, CHIP 10k 0.5% 1/10W
R103	1-208-806-11	s	METAL, CHIP 10k 0.5% 1/10W
R104	1-208-806-11	s	METAL, CHIP 10k 0.5% 1/10W
R105	1-208-806-11	s	METAL, CHIP 10k 0.5% 1/10W
R106	1-208-806-11	s	METAL, CHIP 10k 0.5% 1/10W
R107	1-208-806-11	s	METAL, CHIP 10k 0.5% 1/10W
R108	1-208-806-11	s	METAL, CHIP 10k 0.5% 1/10W
R111	1-208-806-11	s	METAL, CHIP 10k 0.5% 1/10W
R112	1-208-806-11	s	METAL, CHIP 10k 0.5% 1/10W
R113	1-208-806-11	s	METAL, CHIP 10k 0.5% 1/10W
R114	1-208-806-11	s	METAL, CHIP 10k 0.5% 1/10W
R115	1-208-806-11	s	METAL, CHIP 10k 0.5% 1/10W
R116	1-208-806-11	s	METAL, CHIP 10k 0.5% 1/10W
R117	1-208-806-11	s	METAL, CHIP 10k 0.5% 1/10W
R118	1-208-806-11	s	METAL, CHIP 10k 0.5% 1/10W
R119	1-216-073-00	s	METAL, CHIP 10k 5% 1/10W
R120	1-216-073-00	s	METAL, CHIP 10k 5% 1/10W
R121	1-216-073-00	s	METAL, CHIP 10k 5% 1/10W
R122	1-216-073-00	s	METAL, CHIP 10k 5% 1/10W
R123	1-208-798-11	s	METAL, CHIP 4.7k 0.5% 1/10W
R124	1-216-073-00	s	METAL, CHIP 10k 5% 1/10W
R125	1-208-798-11	s	METAL, CHIP 4.7k 0.5% 1/10W
R126	1-216-073-00	s	METAL, CHIP 10k 5% 1/10W
R127	1-208-798-11	s	METAL, CHIP 4.7k 0.5% 1/10W
R128	1-216-073-00	s	METAL, CHIP 10k 5% 1/10W
R129	1-208-798-11	s	METAL, CHIP 4.7k 0.5% 1/10W
R130	1-216-073-00	s	METAL, CHIP 10k 5% 1/10W
R131	1-208-798-11	s	METAL, CHIP 4.7k 0.5% 1/10W
R132	1-208-798-11	s	METAL, CHIP 4.7k 0.5% 1/10W
R133	1-208-798-11	s	METAL, CHIP 4.7k 0.5% 1/10W
R134	1-208-798-11	s	METAL, CHIP 4.7k 0.5% 1/10W
R135	1-208-805-11	s	METAL, CHIP 9.1k 0.5% 1/10W
R136	1-208-805-11	s	METAL, CHIP 9.1k 0.5% 1/10W
R137	1-208-805-11	s	METAL, CHIP 9.1k 0.5% 1/10W
R138	1-208-805-11	s	METAL, CHIP 9.1k 0.5% 1/10W
R139	1-216-073-00	s	METAL, CHIP 10k 5% 1/10W
R140	1-216-073-00	s	METAL, CHIP 10k 5% 1/10W
R141	1-216-073-00	s	METAL, CHIP 10k 5% 1/10W
R142	1-216-073-00	s	METAL, CHIP 10k 5% 1/10W
R143	1-208-798-11	s	METAL, CHIP 4.7k 0.5% 1/10W
R144	1-208-798-11	s	METAL, CHIP 4.7k 0.5% 1/10W
R145	1-208-798-11	s	METAL, CHIP 4.7k 0.5% 1/10W
R146	1-208-798-11	s	METAL, CHIP 4.7k 0.5% 1/10W
R147	1-208-798-11	s	METAL, CHIP 4.7k 0.5% 1/10W
R148	1-208-798-11	s	METAL, CHIP 4.7k 0.5% 1/10W
R149	1-208-798-11	s	METAL, CHIP 4.7k 0.5% 1/10W
R150	1-208-798-11	s	METAL, CHIP 4.7k 0.5% 1/10W
R151	1-216-073-00	s	METAL, CHIP 10k 5% 1/10W

(DA-119 BOARD; Suffix -13, 14)

Ref. No. or Q'ty	Part No.	SP	Description
R152	1-216-073-00	s	METAL, CHIP 10k 5% 1/10W
R153	1-216-073-00	s	METAL, CHIP 10k 5% 1/10W
R154	1-216-073-00	s	METAL, CHIP 10k 5% 1/10W
R155	1-208-799-11	s	METAL, CHIP 5.1k 0.5% 1/10W
R156	1-208-799-11	s	METAL, CHIP 5.1k 0.5% 1/10W
R157	1-208-799-11	s	METAL, CHIP 5.1k 0.5% 1/10W
R158	1-208-799-11	s	METAL, CHIP 5.1k 0.5% 1/10W
R159	1-208-806-11	s	METAL, CHIP 10k 0.5% 1/10W
R160	1-208-806-11	s	METAL, CHIP 10k 0.5% 1/10W
R161	1-208-806-11	s	METAL, CHIP 10k 0.5% 1/10W
R162	1-208-806-11	s	METAL, CHIP 10k 0.5% 1/10W
R163	1-216-091-00	s	METAL, CHIP 56k 5% 1/10W
R164	1-216-091-00	s	METAL, CHIP 56k 5% 1/10W
R165	1-216-091-00	s	METAL, CHIP 56k 5% 1/10W
R166	1-216-091-00	s	METAL, CHIP 56k 5% 1/10W
R167	1-216-025-91	s	METAL, CHIP 100 5% 1/10W
R168	1-216-025-91	s	METAL, CHIP 100 5% 1/10W
R169	1-216-049-91	s	METAL, CHIP 1k 5% 1/10W
R170	1-216-049-91	s	METAL, CHIP 1k 5% 1/10W
R171	1-216-049-91	s	METAL, CHIP 1k 5% 1/10W
R172	1-216-049-91	s	METAL, CHIP 1k 5% 1/10W
R202	1-216-025-91	s	METAL, CHIP 100 5% 1/10W
R203	1-216-025-91	s	METAL, CHIP 100 5% 1/10W
R205	1-216-025-91	s	METAL, CHIP 100 5% 1/10W
R206	1-216-025-91	s	METAL, CHIP 100 5% 1/10W
R207	1-216-025-91	s	METAL, CHIP 100 5% 1/10W
R208	1-216-025-91	s	METAL, CHIP 100 5% 1/10W
R209	1-216-025-91	s	METAL, CHIP 100 5% 1/10W
R210	1-216-025-91	s	METAL, CHIP 100 5% 1/10W
R211	1-216-025-91	s	METAL, CHIP 100 5% 1/10W
R212	1-216-025-91	s	METAL, CHIP 100 5% 1/10W
R213	1-216-025-91	s	METAL, CHIP 100 5% 1/10W
R218	1-216-025-91	s	METAL, CHIP 100 5% 1/10W
R301	1-216-025-91	s	METAL, CHIP 100 5% 1/10W
R303	1-216-025-91	s	METAL, CHIP 100 5% 1/10W
R304	1-216-049-91	s	METAL, CHIP 1k 5% 1/10W
R318	1-216-097-91	s	METAL, CHIP 100k 5% 1/10W
R319	1-216-091-00	s	METAL, CHIP 56k 5% 1/10W
R320	1-216-097-91	s	METAL, CHIP 100k 5% 1/10W
R321	1-216-089-91	s	METAL, CHIP 47k 5% 1/10W
R322	1-216-089-91	s	METAL, CHIP 47k 5% 1/10W
R324	1-216-089-91	s	METAL, CHIP 47k 5% 1/10W
R325	1-216-037-00	s	METAL, CHIP 330 5% 1/10W
R326	1-216-077-00	s	METAL, CHIP 15k 5% 1/10W
R327	1-216-089-91	s	METAL, CHIP 47k 5% 1/10W
R328	1-216-089-91	s	METAL, CHIP 47k 5% 1/10W
R329	1-216-089-91	s	METAL, CHIP 47k 5% 1/10W
R330	1-216-089-91	s	METAL, CHIP 47k 5% 1/10W
R331	1-216-089-91	s	METAL, CHIP 47k 5% 1/10W
R333	1-216-089-91	s	METAL, CHIP 47k 5% 1/10W
R334	1-216-089-91	s	METAL, CHIP 47k 5% 1/10W
R335	1-216-089-91	s	METAL, CHIP 47k 5% 1/10W
R336	1-216-089-91	s	METAL, CHIP 47k 5% 1/10W
R337	1-216-073-00	s	METAL, CHIP 10k 5% 1/10W
R338	1-216-025-91	s	METAL, CHIP 100 5% 1/10W
R404	1-216-295-91	s	RES, CHIP 0
R416	1-216-089-91	s	METAL, CHIP 47k 5% 1/10W
R428	1-216-295-91	s	RES, CHIP 0
R429	1-216-295-91	s	RES, CHIP 0

(DA-119 BOARD; Suffix -13, 14)

Ref. No. or Q'ty	Part No.	SP	Description
R430	1-216-295-91	s	RES, CHIP 0
R431	1-216-295-91	s	RES, CHIP 0
R432	1-216-295-91	s	RES, CHIP 0
R433	1-216-295-91	s	RES, CHIP 0
R440	1-216-025-91	s	METAL, CHIP 100 5% 1/10W
R441	1-216-089-91	s	METAL, CHIP 47k 5% 1/10W
R442	1-216-295-91	s	RES, CHIP 0
R501	1-216-025-91	s	METAL, CHIP 100 5% 1/10W
R502	1-216-025-91	s	METAL, CHIP 100 5% 1/10W
R503	1-216-025-91	s	METAL, CHIP 100 5% 1/10W
R504	1-216-295-91	s	RES, CHIP 0
R506	1-216-295-91	s	RES, CHIP 0
R511	1-216-073-00	s	METAL, CHIP 10k 5% 1/10W
R513	1-216-097-91	s	METAL, CHIP 100k 5% 1/10W
R514	1-216-089-91	s	METAL, CHIP 47k 5% 1/10W
R515	1-216-097-91	s	METAL, CHIP 100k 5% 1/10W
R516	1-216-091-00	s	METAL, CHIP 56k 5% 1/10W
R517	1-216-089-91	s	METAL, CHIP 47k 5% 1/10W
R518	1-216-037-00	s	METAL, CHIP 330 5% 1/10W
R519	1-216-089-91	s	METAL, CHIP 47k 5% 1/10W
R521	1-216-089-91	s	METAL, CHIP 47k 5% 1/10W
R522	1-216-077-00	s	METAL, CHIP 15k 5% 1/10W
R523	1-216-089-91	s	METAL, CHIP 47k 5% 1/10W
R524	1-216-089-91	s	METAL, CHIP 47k 5% 1/10W
R525	1-216-089-91	s	METAL, CHIP 47k 5% 1/10W
R526	1-216-089-91	s	METAL, CHIP 47k 5% 1/10W
R527	1-216-089-91	s	METAL, CHIP 47k 5% 1/10W
R528	1-216-089-91	s	METAL, CHIP 47k 5% 1/10W
R529	1-216-089-91	s	METAL, CHIP 47k 5% 1/10W
R530	1-216-089-91	s	METAL, CHIP 47k 5% 1/10W
R531	1-216-295-91	s	RES, CHIP 0
R532	1-216-073-00	s	METAL, CHIP 10k 5% 1/10W
R555	1-216-049-91	s	METAL, CHIP 1k 5% 1/10W
R556	1-216-025-91	s	METAL, CHIP 100 5% 1/10W
R557	1-216-025-91	s	METAL, CHIP 100 5% 1/10W
R558	1-216-025-91	s	METAL, CHIP 100 5% 1/10W
R581	1-216-049-91	s	METAL, CHIP 1k 5% 1/10W
R582	1-216-081-00	s	METAL, CHIP 22k 5% 1/10W
R583	1-216-081-00	s	METAL, CHIP 22k 5% 1/10W
R584	1-216-081-00	s	METAL, CHIP 22k 5% 1/10W
R585	1-216-081-00	s	METAL, CHIP 22k 5% 1/10W
R586	1-216-073-00	s	METAL, CHIP 10k 5% 1/10W
R601	1-208-806-11	s	METAL, CHIP 10k 0.5% 1/10W
R602	1-208-806-11	s	METAL, CHIP 10k 0.5% 1/10W
R603	1-208-806-11	s	METAL, CHIP 10k 0.5% 1/10W
R604	1-208-806-11	s	METAL, CHIP 10k 0.5% 1/10W
R605	1-208-815-11	s	METAL, CHIP 24k 0.5% 1/10W
R606	1-208-815-11	s	METAL, CHIP 24k 0.5% 1/10W
R607	1-208-808-11	s	METAL, CHIP 12k 0.5% 1/10W
R608	1-208-808-11	s	METAL, CHIP 12k 0.5% 1/10W
R609	1-208-814-11	s	METAL, CHIP 22k 0.5% 1/10W
R610	1-216-073-00	s	METAL, CHIP 10k 5% 1/10W
R611	1-208-814-11	s	METAL, CHIP 22k 0.5% 1/10W
R612	1-208-798-11	s	METAL, CHIP 4.7k 0.5% 1/10W
R613	1-208-805-11	s	METAL, CHIP 9.1k 0.5% 1/10W
R614	1-208-798-11	s	METAL, CHIP 4.7k 0.5% 1/10W
R615	1-216-073-00	s	METAL, CHIP 10k 5% 1/10W
R616	1-208-806-11	s	METAL, CHIP 10k 0.5% 1/10W
R617	1-216-073-00	s	METAL, CHIP 10k 5% 1/10W

(DA-119 BOARD; Suffix -13, 14)

Ref. No. or Q'ty	Part No.	SP	Description
R618	1-208-804-11	s	METAL, CHIP 8.2k 0.5% 1/10W
R619	1-208-805-11	s	METAL, CHIP 9.1k 0.5% 1/10W
R620	1-208-798-11	s	METAL, CHIP 4.7k 0.5% 1/10W
R621	1-216-073-00	s	METAL, CHIP 10k 5% 1/10W
R622	1-208-808-11	s	METAL, CHIP 12k 0.5% 1/10W
R623	1-208-798-11	s	METAL, CHIP 4.7k 0.5% 1/10W
R624	1-208-806-11	s	METAL, CHIP 10k 0.5% 1/10W
R625	1-208-806-11	s	METAL, CHIP 10k 0.5% 1/10W
R626	1-208-798-11	s	METAL, CHIP 4.7k 0.5% 1/10W
R627	1-208-798-11	s	METAL, CHIP 4.7k 0.5% 1/10W
R628	1-208-798-11	s	METAL, CHIP 4.7k 0.5% 1/10W
R629	1-208-798-11	s	METAL, CHIP 4.7k 0.5% 1/10W
R630	1-208-806-11	s	METAL, CHIP 10k 0.5% 1/10W
R631	1-208-806-11	s	METAL, CHIP 10k 0.5% 1/10W
R632	1-216-049-91	s	METAL, CHIP 1k 5% 1/10W
R633	1-208-806-11	s	METAL, CHIP 10k 0.5% 1/10W
R635	1-216-049-91	s	METAL, CHIP 1k 5% 1/10W
R637	1-208-750-11	s	METAL, CHIP 47 0.5% 1/10W
R638	1-216-097-91	s	METAL, CHIP 100k 5% 1/10W
R639	1-216-097-91	s	METAL, CHIP 100k 5% 1/10W
R640	1-208-806-11	s	METAL, CHIP 10k 0.5% 1/10W
R641	1-208-750-11	s	METAL, CHIP 47 0.5% 1/10W
R642	1-220-242-11	s	METAL, CHIP 22 5% 1/4W
R645	1-220-242-11	s	METAL, CHIP 22 5% 1/4W
R648	1-216-037-00	s	METAL, CHIP 330 5% 1/10W
R649	1-216-073-00	s	METAL, CHIP 10k 5% 1/10W
R701	1-208-806-11	s	METAL, CHIP 10k 0.5% 1/10W
R702	1-208-806-11	s	METAL, CHIP 10k 0.5% 1/10W
R703	1-208-806-11	s	METAL, CHIP 10k 0.5% 1/10W
R704	1-208-806-11	s	METAL, CHIP 10k 0.5% 1/10W
R705	1-208-815-11	s	METAL, CHIP 24k 0.5% 1/10W
R706	1-208-815-11	s	METAL, CHIP 24k 0.5% 1/10W
R707	1-208-808-11	s	METAL, CHIP 12k 0.5% 1/10W
R708	1-208-808-11	s	METAL, CHIP 12k 0.5% 1/10W
R709	1-208-814-11	s	METAL, CHIP 22k 0.5% 1/10W
R710	1-216-073-00	s	METAL, CHIP 10k 5% 1/10W
R711	1-208-814-11	s	METAL, CHIP 22k 0.5% 1/10W
R712	1-208-798-11	s	METAL, CHIP 4.7k 0.5% 1/10W
R713	1-208-805-11	s	METAL, CHIP 9.1k 0.5% 1/10W
R714	1-208-798-11	s	METAL, CHIP 4.7k 0.5% 1/10W
R715	1-216-073-00	s	METAL, CHIP 10k 5% 1/10W
R716	1-208-806-11	s	METAL, CHIP 10k 0.5% 1/10W
R717	1-216-073-00	s	METAL, CHIP 10k 5% 1/10W
R718	1-208-804-11	s	METAL, CHIP 8.2k 0.5% 1/10W
R719	1-208-805-11	s	METAL, CHIP 9.1k 0.5% 1/10W
R720	1-208-798-11	s	METAL, CHIP 4.7k 0.5% 1/10W
R721	1-216-073-00	s	METAL, CHIP 10k 5% 1/10W
R722	1-208-808-11	s	METAL, CHIP 12k 0.5% 1/10W
R723	1-208-798-11	s	METAL, CHIP 4.7k 0.5% 1/10W
R724	1-208-806-11	s	METAL, CHIP 10k 0.5% 1/10W
R725	1-208-806-11	s	METAL, CHIP 10k 0.5% 1/10W
R726	1-208-798-11	s	METAL, CHIP 4.7k 0.5% 1/10W
R727	1-208-798-11	s	METAL, CHIP 4.7k 0.5% 1/10W
R728	1-208-798-11	s	METAL, CHIP 4.7k 0.5% 1/10W
R729	1-208-798-11	s	METAL, CHIP 4.7k 0.5% 1/10W
R730	1-208-806-11	s	METAL, CHIP 10k 0.5% 1/10W
R731	1-208-806-11	s	METAL, CHIP 10k 0.5% 1/10W
R732	1-216-049-91	s	METAL, CHIP 1k 5% 1/10W
R733	1-208-806-11	s	METAL, CHIP 10k 0.5% 1/10W

(DA-119 BOARD; Suffix -13, 14)

Ref. No. or Q'ty	Part No.	SP	Description
R735	1-216-049-91	s	METAL, CHIP 1k 5% 1/10W
R737	1-208-750-11	s	METAL, CHIP 47 0.5% 1/10W
R738	1-216-097-91	s	METAL, CHIP 100k 5% 1/10W
R739	1-216-097-91	s	METAL, CHIP 100k 5% 1/10W
R740	1-208-806-11	s	METAL, CHIP 10k 0.5% 1/10W
R741	1-208-750-11	s	METAL, CHIP 47 0.5% 1/10W
R744	1-220-242-11	s	METAL, CHIP 22 5% 1/4W
R747	1-220-242-11	s	METAL, CHIP 22 5% 1/4W
R748	1-216-037-00	s	METAL, CHIP 330 5% 1/10W
R749	1-216-073-00	s	METAL, CHIP 10k 5% 1/10W
R801	1-208-806-11	s	METAL, CHIP 10k 0.5% 1/10W
R802	1-208-806-11	s	METAL, CHIP 10k 0.5% 1/10W
R803	1-208-806-11	s	METAL, CHIP 10k 0.5% 1/10W
R804	1-208-806-11	s	METAL, CHIP 10k 0.5% 1/10W
R805	1-208-815-11	s	METAL, CHIP 24k 0.5% 1/10W
R806	1-208-815-11	s	METAL, CHIP 24k 0.5% 1/10W
R807	1-208-808-11	s	METAL, CHIP 12k 0.5% 1/10W
R808	1-208-808-11	s	METAL, CHIP 12k 0.5% 1/10W
R809	1-208-814-11	s	METAL, CHIP 22k 0.5% 1/10W
R810	1-216-073-00	s	METAL, CHIP 10k 5% 1/10W
R811	1-208-814-11	s	METAL, CHIP 22k 0.5% 1/10W
R812	1-208-798-11	s	METAL, CHIP 4.7k 0.5% 1/10W
R813	1-208-805-11	s	METAL, CHIP 9.1k 0.5% 1/10W
R814	1-208-798-11	s	METAL, CHIP 4.7k 0.5% 1/10W
R815	1-216-073-00	s	METAL, CHIP 10k 5% 1/10W
R816	1-208-806-11	s	METAL, CHIP 10k 0.5% 1/10W
R817	1-216-073-00	s	METAL, CHIP 10k 5% 1/10W
R818	1-208-804-11	s	METAL, CHIP 8.2k 0.5% 1/10W
R819	1-208-805-11	s	METAL, CHIP 9.1k 0.5% 1/10W
R820	1-208-798-11	s	METAL, CHIP 4.7k 0.5% 1/10W
R821	1-216-073-00	s	METAL, CHIP 10k 5% 1/10W
R822	1-208-808-11	s	METAL, CHIP 12k 0.5% 1/10W
R823	1-208-798-11	s	METAL, CHIP 4.7k 0.5% 1/10W
R824	1-208-806-11	s	METAL, CHIP 10k 0.5% 1/10W
R825	1-208-806-11	s	METAL, CHIP 10k 0.5% 1/10W
R826	1-208-798-11	s	METAL, CHIP 4.7k 0.5% 1/10W
R827	1-208-798-11	s	METAL, CHIP 4.7k 0.5% 1/10W
R828	1-208-798-11	s	METAL, CHIP 4.7k 0.5% 1/10W
R829	1-208-798-11	s	METAL, CHIP 4.7k 0.5% 1/10W
R830	1-208-806-11	s	METAL, CHIP 10k 0.5% 1/10W
R831	1-208-806-11	s	METAL, CHIP 10k 0.5% 1/10W
R832	1-216-049-91	s	METAL, CHIP 1k 5% 1/10W
R833	1-208-806-11	s	METAL, CHIP 10k 0.5% 1/10W
R835	1-216-049-91	s	METAL, CHIP 1k 5% 1/10W
R837	1-208-750-11	s	METAL, CHIP 47 0.5% 1/10W
R838	1-216-097-91	s	METAL, CHIP 100k 5% 1/10W
R839	1-216-097-91	s	METAL, CHIP 100k 5% 1/10W
R840	1-208-806-11	s	METAL, CHIP 10k 0.5% 1/10W
R841	1-208-750-11	s	METAL, CHIP 47 0.5% 1/10W
R844	1-220-242-11	s	METAL, CHIP 22 5% 1/4W
R845	1-220-242-11	s	METAL, CHIP 22 5% 1/4W
R848	1-216-037-00	s	METAL, CHIP 330 5% 1/10W
R849	1-216-073-00	s	METAL, CHIP 10k 5% 1/10W
R901	1-208-806-11	s	METAL, CHIP 10k 0.5% 1/10W
R902	1-208-806-11	s	METAL, CHIP 10k 0.5% 1/10W
R903	1-208-806-11	s	METAL, CHIP 10k 0.5% 1/10W
R904	1-208-806-11	s	METAL, CHIP 10k 0.5% 1/10W
R905	1-208-815-11	s	METAL, CHIP 24k 0.5% 1/10W
R906	1-208-815-11	s	METAL, CHIP 24k 0.5% 1/10W

(DA-119 BOARD; Suffix -13, 14)

Ref. No. or Q'ty	Part No.	SP	Description
R907	1-208-808-11	s	METAL, CHIP 12k 0.5% 1/10W
R908	1-208-808-11	s	METAL, CHIP 12k 0.5% 1/10W
R909	1-208-814-11	s	METAL, CHIP 22k 0.5% 1/10W
R910	1-216-073-00	s	METAL, CHIP 10k 5% 1/10W
R911	1-208-814-11	s	METAL, CHIP 22k 0.5% 1/10W
R912	1-208-798-11	s	METAL, CHIP 4.7k 0.5% 1/10W
R913	1-208-805-11	s	METAL, CHIP 9.1k 0.5% 1/10W
R914	1-208-798-11	s	METAL, CHIP 4.7k 0.5% 1/10W
R915	1-216-073-00	s	METAL, CHIP 10k 5% 1/10W
R916	1-208-806-11	s	METAL, CHIP 10k 0.5% 1/10W
R917	1-216-073-00	s	METAL, CHIP 10k 5% 1/10W
R918	1-208-804-11	s	METAL, CHIP 8.2k 0.5% 1/10W
R919	1-208-805-11	s	METAL, CHIP 9.1k 0.5% 1/10W
R920	1-208-798-11	s	METAL, CHIP 4.7k 0.5% 1/10W
R921	1-216-073-00	s	METAL, CHIP 10k 5% 1/10W
R922	1-208-808-11	s	METAL, CHIP 12k 0.5% 1/10W
R923	1-208-798-11	s	METAL, CHIP 4.7k 0.5% 1/10W
R924	1-208-806-11	s	METAL, CHIP 10k 0.5% 1/10W
R925	1-208-806-11	s	METAL, CHIP 10k 0.5% 1/10W
R926	1-208-798-11	s	METAL, CHIP 4.7k 0.5% 1/10W
R927	1-208-798-11	s	METAL, CHIP 4.7k 0.5% 1/10W
R928	1-208-798-11	s	METAL, CHIP 4.7k 0.5% 1/10W
R929	1-208-798-11	s	METAL, CHIP 4.7k 0.5% 1/10W
R930	1-208-806-11	s	METAL, CHIP 10k 0.5% 1/10W
R931	1-208-806-11	s	METAL, CHIP 10k 0.5% 1/10W
R932	1-216-049-91	s	METAL, CHIP 1k 5% 1/10W
R933	1-208-806-11	s	METAL, CHIP 10k 0.5% 1/10W
R935	1-216-049-91	s	METAL, CHIP 1k 5% 1/10W
R937	1-208-750-11	s	METAL, CHIP 47 0.5% 1/10W
R938	1-216-097-91	s	METAL, CHIP 100k 5% 1/10W
R939	1-216-097-91	s	METAL, CHIP 100k 5% 1/10W
R940	1-208-806-11	s	METAL, CHIP 10k 0.5% 1/10W
R941	1-208-750-11	s	METAL, CHIP 47 0.5% 1/10W
R942	1-220-242-11	s	METAL, CHIP 22 5% 1/4W
R947	1-220-242-11	s	METAL, CHIP 22 5% 1/4W
R948	1-216-037-00	s	METAL, CHIP 330 5% 1/10W
R949	1-216-073-00	s	METAL, CHIP 10k 5% 1/10W
RB101	1-239-412-11	s	RESISTOR BLOCK, CHIP 100 x 4
RB102	1-239-412-11	s	RESISTOR BLOCK, CHIP 100 x 4
RB103	1-239-412-11	s	RESISTOR BLOCK, CHIP 100 x 4
RB201	1-239-412-11	s	RESISTOR BLOCK, CHIP 100 x 4
RB202	1-239-389-11	s	RESISTOR BLOCK, CHIP 47k x 4
RB203	1-239-389-11	s	RESISTOR BLOCK, CHIP 47k x 4
RB301	1-239-308-11	s	RESISTOR BLOCK, CHIP 47K x 8
RB302	1-239-412-11	s	RESISTOR BLOCK, CHIP 100 x 4
RB303	1-239-412-11	s	RESISTOR BLOCK, CHIP 100 x 4
RB304	1-239-412-11	s	RESISTOR BLOCK, CHIP 100 x 4
RB305	1-239-412-11	s	RESISTOR BLOCK, CHIP 100 x 4
RB401	1-239-412-11	s	RESISTOR BLOCK, CHIP 100 x 4
RB402	1-239-412-11	s	RESISTOR BLOCK, CHIP 100 x 4
RB403	1-239-412-11	s	RESISTOR BLOCK, CHIP 100 x 4
RB405	1-239-389-11	s	RESISTOR BLOCK, CHIP 47k x 4
RB406	1-239-389-11	s	RESISTOR BLOCK, CHIP 47k x 4
RB408	1-239-389-11	s	RESISTOR BLOCK, CHIP 47k x 4
RB409	1-239-389-11	s	RESISTOR BLOCK, CHIP 47k x 4
RB501	1-239-308-11	s	RESISTOR BLOCK, CHIP 47K x 8
RB502	1-239-412-11	s	RESISTOR BLOCK, CHIP 100 x 4
RB503	1-239-412-11	s	RESISTOR BLOCK, CHIP 100 x 4

(DA-119 BOARD; Suffix -13, 14)

Ref. No. or Q'ty	Part No.	SP	Description
RB504	1-239-412-11	s	RESISTOR BLOCK, CHIP 100 x 4
RB505	1-239-412-11	s	RESISTOR BLOCK, CHIP 100 x 4
RB551	1-239-412-11	s	RESISTOR BLOCK, CHIP 100 x 4
RB552	1-239-412-11	s	RESISTOR BLOCK, CHIP 100 x 4
RV601	1-241-264-11	s	RES, ADJ, METAL 10k
RV701	1-241-264-11	s	RES, ADJ, METAL 10k
RV801	1-241-264-11	s	RES, ADJ, METAL 10k
RV901	1-241-264-11	s	RES, ADJ, METAL 10k
RY601	1-515-716-11	s	RELAY (TQ2-5V)
RY701	1-515-716-11	s	RELAY (TQ2-5V)
RY801	1-515-716-11	s	RELAY (TQ2-5V)
RY901	1-515-716-11	s	RELAY (TQ2-5V)

DA-119 BOARD; Suffix -12

This list corresponds to the board suffix number -12.

Ref. No. or Q'ty	Part No.	SP	Description
1pc	A-8315-280-B	s	MOUNTED CIRCUIT BOARD, DA-119
1pc	7-621-759-45	s	+PSW, 2.6x6
1pc	3-179-084-01	s	LEVER (R), PRINTED CIRCUIT BOARD
1pc	3-179-085-01	s	LEVER (L), PRINTED CIRCUIT BOARD
C12	1-163-038-91	s	CERAMIC, CHIP 0.1uF 25V
C13	1-163-038-91	s	CERAMIC, CHIP 0.1uF 25V
C15	1-163-038-91	s	CERAMIC, CHIP 0.1uF 25V
C16	1-163-251-11	s	CERAMIC, CHIP 100pF 5% 50V
C17	1-163-251-11	s	CERAMIC, CHIP 100pF 5% 50V
C18	1-126-394-11	s	ELECT, CHIP 10uF 20% 16V
C19	1-126-394-11	s	ELECT, CHIP 10uF 20% 16V
C20	1-126-394-11	s	ELECT, CHIP 10uF 20% 16V
C21	1-126-394-11	s	ELECT, CHIP 10uF 20% 16V
C22	1-163-038-91	s	CERAMIC, CHIP 0.1uF 25V
C23	1-163-038-91	s	CERAMIC, CHIP 0.1uF 25V
C24	1-163-038-91	s	CERAMIC, CHIP 0.1uF 25V
C25	1-163-038-91	s	CERAMIC, CHIP 0.1uF 25V
C26	1-163-038-91	s	CERAMIC, CHIP 0.1uF 25V
C27	1-163-038-91	s	CERAMIC, CHIP 0.1uF 25V
C28	1-163-038-91	s	CERAMIC, CHIP 0.1uF 25V
C29	1-163-038-91	s	CERAMIC, CHIP 0.1uF 25V
C30	1-126-396-11	s	ELECT, CHIP 47uF 20% 16V
C31	1-126-394-11	s	ELECT, CHIP 10uF 20% 16V
C32	1-126-394-11	s	ELECT, CHIP 10uF 20% 16V
C33	1-126-396-11	s	ELECT, CHIP 47uF 20% 16V
C36	1-126-396-11	s	ELECT, CHIP 47uF 20% 16V
C51	1-163-038-91	s	CERAMIC, CHIP 0.1uF 25V
C52	1-163-038-91	s	CERAMIC, CHIP 0.1uF 25V
C53	1-163-038-91	s	CERAMIC, CHIP 0.1uF 25V
C54	1-163-038-91	s	CERAMIC, CHIP 0.1uF 25V
C55	1-163-038-91	s	CERAMIC, CHIP 0.1uF 25V
C56	1-163-038-91	s	CERAMIC, CHIP 0.1uF 25V
C57	1-163-038-91	s	CERAMIC, CHIP 0.1uF 25V
C58	1-163-038-91	s	CERAMIC, CHIP 0.1uF 25V
C59	1-163-038-91	s	CERAMIC, CHIP 0.1uF 25V
C60	1-163-038-91	s	CERAMIC, CHIP 0.1uF 25V
C61	1-126-394-11	s	ELECT, CHIP 10uF 20% 16V
C62	1-163-235-11	s	CERAMIC, CHIP 22pF 5% 50V
C101	1-163-113-00	s	CERAMIC, CHIP 68pF 5% 50V
C102	1-163-113-00	s	CERAMIC, CHIP 68pF 5% 50V
C103	1-163-113-00	s	CERAMIC, CHIP 68pF 5% 50V
C104	1-163-113-00	s	CERAMIC, CHIP 68pF 5% 50V
C105	1-163-113-00	s	CERAMIC, CHIP 68pF 5% 50V
C106	1-163-113-00	s	CERAMIC, CHIP 68pF 5% 50V
C107	1-163-113-00	s	CERAMIC, CHIP 68pF 5% 50V
C108	1-163-113-00	s	CERAMIC, CHIP 68pF 5% 50V
C109	1-126-397-11	s	ELECT, CHIP 33uF 20% 25V
C110	1-126-397-11	s	ELECT, CHIP 33uF 20% 25V
C111	1-126-397-11	s	ELECT, CHIP 33uF 20% 25V
C112	1-126-397-11	s	ELECT, CHIP 33uF 20% 25V
C113	1-126-395-11	s	ELECT, CHIP 22uF 20% 16V
C114	1-126-395-11	s	ELECT, CHIP 22uF 20% 16V
C115	1-126-391-11	s	ELECT, CHIP 47uF 20% 6.3V
C116	1-126-391-11	s	ELECT, CHIP 47uF 20% 6.3V
C117	1-126-391-11	s	ELECT, CHIP 47uF 20% 6.3V
C118	1-126-395-11	s	ELECT, CHIP 22uF 20% 16V
C119	1-126-391-11	s	ELECT, CHIP 47uF 20% 6.3V

(DA-119 BOARD; Suffix -12)

Ref. No. or Q'ty	Part No.	SP	Description
C120	1-126-395-11	s	ELECT, CHIP 22uF 20% 16V
C121	1-126-391-11	s	ELECT, CHIP 47uF 20% 6.3V
C122	1-126-391-11	s	ELECT, CHIP 47uF 20% 6.3V
C123	1-126-391-11	s	ELECT, CHIP 47uF 20% 6.3V
C124	1-126-391-11	s	ELECT, CHIP 47uF 20% 6.3V
C125	1-163-251-11	s	CERAMIC, CHIP 100pF 5% 50V
C126	1-163-251-11	s	CERAMIC, CHIP 100pF 5% 50V
C127	1-163-259-91	s	CERAMIC, CHIP 220pF 5% 50V
C128	1-163-251-11	s	CERAMIC, CHIP 100pF 5% 50V
C129	1-163-259-91	s	CERAMIC, CHIP 220pF 5% 50V
C130	1-163-251-11	s	CERAMIC, CHIP 100pF 5% 50V
C131	1-163-259-91	s	CERAMIC, CHIP 220pF 5% 50V
C132	1-163-259-91	s	CERAMIC, CHIP 220pF 5% 50V
C133	1-126-394-11	s	ELECT, CHIP 10uF 20% 16V
C134	1-126-394-11	s	ELECT, CHIP 10uF 20% 16V
C135	1-126-391-11	s	ELECT, CHIP 47uF 20% 6.3V
C136	1-126-391-11	s	ELECT, CHIP 47uF 20% 6.3V
C137	1-163-038-91	s	CERAMIC, CHIP 0.1uF 25V
C138	1-163-038-91	s	CERAMIC, CHIP 0.1uF 25V
C139	1-163-017-00	s	CERAMIC, CHIP 0.0047uF 5% 50V
C140	1-163-017-00	s	CERAMIC, CHIP 0.0047uF 5% 50V
C141	1-163-017-00	s	CERAMIC, CHIP 0.0047uF 5% 50V
C142	1-163-017-00	s	CERAMIC, CHIP 0.0047uF 5% 50V
C143	1-163-017-00	s	CERAMIC, CHIP 0.0047uF 5% 50V
C144	1-163-017-00	s	CERAMIC, CHIP 0.0047uF 5% 50V
C145	1-163-017-00	s	CERAMIC, CHIP 0.0047uF 5% 50V
C146	1-163-017-00	s	CERAMIC, CHIP 0.0047uF 5% 50V
C147	1-126-391-11	s	ELECT, CHIP 47uF 20% 6.3V
C148	1-126-391-11	s	ELECT, CHIP 47uF 20% 6.3V
C149	1-126-391-11	s	ELECT, CHIP 47uF 20% 6.3V
C150	1-126-391-11	s	ELECT, CHIP 47uF 20% 6.3V
C151	1-126-391-11	s	ELECT, CHIP 47uF 20% 6.3V
C152	1-126-391-11	s	ELECT, CHIP 47uF 20% 6.3V
C153	1-163-038-91	s	CERAMIC, CHIP 0.1uF 25V
C154	1-163-038-91	s	CERAMIC, CHIP 0.1uF 25V
C155	1-126-391-11	s	ELECT, CHIP 47uF 20% 6.3V
C156	1-126-391-11	s	ELECT, CHIP 47uF 20% 6.3V
C157	1-163-038-91	s	CERAMIC, CHIP 0.1uF 25V
C158	1-163-038-91	s	CERAMIC, CHIP 0.1uF 25V
C159	1-163-038-91	s	CERAMIC, CHIP 0.1uF 25V
C160	1-163-038-91	s	CERAMIC, CHIP 0.1uF 25V
C161	1-126-394-11	s	ELECT, CHIP 10uF 20% 16V
C162	1-163-038-91	s	CERAMIC, CHIP 0.1uF 25V
C163	1-163-038-91	s	CERAMIC, CHIP 0.1uF 25V
C164	1-163-038-91	s	CERAMIC, CHIP 0.1uF 25V
C165	1-163-038-91	s	CERAMIC, CHIP 0.1uF 25V
C166	1-126-394-11	s	ELECT, CHIP 10uF 20% 16V
C167	1-163-038-91	s	CERAMIC, CHIP 0.1uF 25V
C168	1-163-251-11	s	CERAMIC, CHIP 100pF 5% 50V
C169	1-163-251-11	s	CERAMIC, CHIP 100pF 5% 50V
C170	1-163-251-11	s	CERAMIC, CHIP 100pF 5% 50V
C171	1-163-251-11	s	CERAMIC, CHIP 100pF 5% 50V
C172	1-163-121-00	s	CERAMIC, CHIP 150pF 5% 50V
C173	1-163-121-00	s	CERAMIC, CHIP 150pF 5% 50V
C174	1-163-121-00	s	CERAMIC, CHIP 150pF 5% 50V
C175	1-163-121-00	s	CERAMIC, CHIP 150pF 5% 50V
C176	1-163-038-91	s	CERAMIC, CHIP 0.1uF 25V
C177	1-163-038-91	s	CERAMIC, CHIP 0.1uF 25V
C178	1-163-038-91	s	CERAMIC, CHIP 0.1uF 25V

(DA-119 BOARD; Suffix -12)

Ref. No. or Q'ty	Part No.	SP	Description
C179	1-163-038-91	s	CERAMIC, CHIP 0.1uF 25V
C180	1-163-038-91	s	CERAMIC, CHIP 0.1uF 25V
C201	1-126-394-11	s	ELECT, CHIP 10uF 20% 16V
C202	1-126-394-11	s	ELECT, CHIP 10uF 20% 16V
C203	1-163-038-91	s	CERAMIC, CHIP 0.1uF 25V
C204	1-163-038-91	s	CERAMIC, CHIP 0.1uF 25V
C205	1-163-038-91	s	CERAMIC, CHIP 0.1uF 25V
C206	1-163-038-91	s	CERAMIC, CHIP 0.1uF 25V
C207	1-163-038-91	s	CERAMIC, CHIP 0.1uF 25V
C208	1-163-038-91	s	CERAMIC, CHIP 0.1uF 25V
C209	1-163-038-91	s	CERAMIC, CHIP 0.1uF 25V
C210	1-163-038-91	s	CERAMIC, CHIP 0.1uF 25V
C211	1-163-038-91	s	CERAMIC, CHIP 0.1uF 25V
C212	1-163-038-91	s	CERAMIC, CHIP 0.1uF 25V
C213	1-163-038-91	s	CERAMIC, CHIP 0.1uF 25V
C214	1-163-038-91	s	CERAMIC, CHIP 0.1uF 25V
C215	1-163-038-91	s	CERAMIC, CHIP 0.1uF 25V
C220	1-126-394-11	s	ELECT, CHIP 10uF 20% 16V
C222	1-163-038-91	s	CERAMIC, CHIP 0.1uF 25V
C225	1-163-038-91	s	CERAMIC, CHIP 0.1uF 25V
C227	1-163-038-91	s	CERAMIC, CHIP 0.1uF 25V
C231	1-163-038-91	s	CERAMIC, CHIP 0.1uF 25V
C234	1-163-038-91	s	CERAMIC, CHIP 0.1uF 25V
C237	1-163-038-91	s	CERAMIC, CHIP 0.1uF 25V
C239	1-163-038-91	s	CERAMIC, CHIP 0.1uF 25V
C241	1-163-038-91	s	CERAMIC, CHIP 0.1uF 25V
C243	1-163-038-91	s	CERAMIC, CHIP 0.1uF 25V
C245	1-163-038-91	s	CERAMIC, CHIP 0.1uF 25V
C301	1-163-038-91	s	CERAMIC, CHIP 0.1uF 25V
C302	1-163-038-91	s	CERAMIC, CHIP 0.1uF 25V
C303	1-163-038-91	s	CERAMIC, CHIP 0.1uF 25V
C304	1-163-038-91	s	CERAMIC, CHIP 0.1uF 25V
C305	1-163-038-91	s	CERAMIC, CHIP 0.1uF 25V
C306	1-163-038-91	s	CERAMIC, CHIP 0.1uF 25V
C307	1-163-038-91	s	CERAMIC, CHIP 0.1uF 25V
C308	1-163-038-91	s	CERAMIC, CHIP 0.1uF 25V
C309	1-163-038-91	s	CERAMIC, CHIP 0.1uF 25V
C310	1-163-038-91	s	CERAMIC, CHIP 0.1uF 25V
C311	1-126-394-11	s	ELECT, CHIP 10uF 20% 16V
C312	1-163-038-91	s	CERAMIC, CHIP 0.1uF 25V
C313	1-163-038-91	s	CERAMIC, CHIP 0.1uF 25V
C314	1-126-394-11	s	ELECT, CHIP 10uF 20% 16V
C315	1-163-038-91	s	CERAMIC, CHIP 0.1uF 25V
C316	1-163-038-91	s	CERAMIC, CHIP 0.1uF 25V
C317	1-163-038-91	s	CERAMIC, CHIP 0.1uF 25V
C318	1-163-038-91	s	CERAMIC, CHIP 0.1uF 25V
C321	1-163-038-91	s	CERAMIC, CHIP 0.1uF 25V
C322	1-163-038-91	s	CERAMIC, CHIP 0.1uF 25V
C323	1-163-038-91	s	CERAMIC, CHIP 0.1uF 25V
C324	1-163-038-91	s	CERAMIC, CHIP 0.1uF 25V
C326	1-163-038-91	s	CERAMIC, CHIP 0.1uF 25V
C328	1-163-038-91	s	CERAMIC, CHIP 0.1uF 25V
C329	1-163-038-91	s	CERAMIC, CHIP 0.1uF 25V
C330	1-163-038-91	s	CERAMIC, CHIP 0.1uF 25V
C331	1-163-038-91	s	CERAMIC, CHIP 0.1uF 25V
C332	1-163-038-91	s	CERAMIC, CHIP 0.1uF 25V
C333	1-163-038-91	s	CERAMIC, CHIP 0.1uF 25V
C334	1-163-038-91	s	CERAMIC, CHIP 0.1uF 25V
C335	1-164-346-11	s	CERAMIC, CHIP 1uF 16V

(DA-119 BOARD; Suffix -12)

Ref. No. or Q'ty	Part No.	SP	Description
C336	1-107-687-11	s	TANTALUM, CHIP 3.3uF 20% 20V
C337	1-107-687-11	s	TANTALUM, CHIP 3.3uF 20% 20V
C338	1-163-038-91	s	CERAMIC, CHIP 0.1uF 25V
C339	1-163-038-91	s	CERAMIC, CHIP 0.1uF 25V
C340	1-163-038-91	s	CERAMIC, CHIP 0.1uF 25V
C341	1-163-038-91	s	CERAMIC, CHIP 0.1uF 25V
C342	1-163-038-91	s	CERAMIC, CHIP 0.1uF 25V
C343	1-163-038-91	s	CERAMIC, CHIP 0.1uF 25V
C344	1-163-038-91	s	CERAMIC, CHIP 0.1uF 25V
C345	1-163-251-11	s	CERAMIC, CHIP 100pF 5% 50V
C346	1-163-038-91	s	CERAMIC, CHIP 0.1uF 25V
C347	1-163-251-11	s	CERAMIC, CHIP 100pF 5% 50V
C348	1-163-038-91	s	CERAMIC, CHIP 0.1uF 25V
C349	1-163-038-91	s	CERAMIC, CHIP 0.1uF 25V
C350	1-163-275-11	s	CERAMIC, CHIP 0.001uF 5% 50V
C351	1-163-275-11	s	CERAMIC, CHIP 0.001uF 5% 50V
C352	1-163-275-11	s	CERAMIC, CHIP 0.001uF 5% 50V
C353	1-163-275-11	s	CERAMIC, CHIP 0.001uF 5% 50V
C354	1-163-038-91	s	CERAMIC, CHIP 0.1uF 25V
C355	1-163-038-91	s	CERAMIC, CHIP 0.1uF 25V
C356	1-163-038-91	s	CERAMIC, CHIP 0.1uF 25V
C357	1-163-038-91	s	CERAMIC, CHIP 0.1uF 25V
C358	1-163-038-91	s	CERAMIC, CHIP 0.1uF 25V
C359	1-163-038-91	s	CERAMIC, CHIP 0.1uF 25V
C362	1-163-038-91	s	CERAMIC, CHIP 0.1uF 25V
C363	1-163-038-91	s	CERAMIC, CHIP 0.1uF 25V
C401	1-126-394-11	s	ELECT, CHIP 10uF 20% 16V
C402	1-126-394-11	s	ELECT, CHIP 10uF 20% 16V
C403	1-163-038-91	s	CERAMIC, CHIP 0.1uF 25V
C405	1-163-038-91	s	CERAMIC, CHIP 0.1uF 25V
C406	1-163-038-91	s	CERAMIC, CHIP 0.1uF 25V
C407	1-163-038-91	s	CERAMIC, CHIP 0.1uF 25V
C408	1-163-038-91	s	CERAMIC, CHIP 0.1uF 25V
C409	1-163-038-91	s	CERAMIC, CHIP 0.1uF 25V
C410	1-163-038-91	s	CERAMIC, CHIP 0.1uF 25V
C411	1-163-038-91	s	CERAMIC, CHIP 0.1uF 25V
C412	1-163-038-91	s	CERAMIC, CHIP 0.1uF 25V
C413	1-163-038-91	s	CERAMIC, CHIP 0.1uF 25V
C415	1-163-038-91	s	CERAMIC, CHIP 0.1uF 25V
C417	1-126-394-11	s	ELECT, CHIP 10uF 20% 16V
C420	1-163-038-91	s	CERAMIC, CHIP 0.1uF 25V
C426	1-163-038-91	s	CERAMIC, CHIP 0.1uF 25V
C427	1-163-038-91	s	CERAMIC, CHIP 0.1uF 25V
C428	1-163-038-91	s	CERAMIC, CHIP 0.1uF 25V
C430	1-163-038-91	s	CERAMIC, CHIP 0.1uF 25V
C434	1-163-038-91	s	CERAMIC, CHIP 0.1uF 25V
C435	1-163-038-91	s	CERAMIC, CHIP 0.1uF 25V
C437	1-163-038-91	s	CERAMIC, CHIP 0.1uF 25V
C440	1-163-038-91	s	CERAMIC, CHIP 0.1uF 25V
C441	1-163-038-91	s	CERAMIC, CHIP 0.1uF 25V
C447	1-163-038-91	s	CERAMIC, CHIP 0.1uF 25V
C501	1-163-038-91	s	CERAMIC, CHIP 0.1uF 25V
C502	1-163-038-91	s	CERAMIC, CHIP 0.1uF 25V
C503	1-163-038-91	s	CERAMIC, CHIP 0.1uF 25V
C504	1-163-038-91	s	CERAMIC, CHIP 0.1uF 25V
C505	1-163-038-91	s	CERAMIC, CHIP 0.1uF 25V
C506	1-163-038-91	s	CERAMIC, CHIP 0.1uF 25V
C507	1-163-038-91	s	CERAMIC, CHIP 0.1uF 25V
C508	1-163-038-91	s	CERAMIC, CHIP 0.1uF 25V

(DA-119 BOARD; Suffix -12)

Ref. No. or Q'ty	Part No.	SP	Description
C509	1-163-038-91	s	CERAMIC, CHIP 0.1uF 25V
C510	1-163-038-91	s	CERAMIC, CHIP 0.1uF 25V
C511	1-163-038-91	s	CERAMIC, CHIP 0.1uF 25V
C512	1-163-235-11	s	CERAMIC, CHIP 22pF 5% 50V
C514	1-126-394-11	s	ELECT, CHIP 10uF 20% 16V
C516	1-163-038-91	s	CERAMIC, CHIP 0.1uF 25V
C518	1-163-038-91	s	CERAMIC, CHIP 0.1uF 25V
C519	1-163-038-91	s	CERAMIC, CHIP 0.1uF 25V
C520	1-163-038-91	s	CERAMIC, CHIP 0.1uF 25V
C521	1-107-687-11	s	TANTALUM, CHIP 3.3uF 20% 20V
C522	1-164-346-11	s	CERAMIC, CHIP 1uF 16V
C523	1-107-687-11	s	TANTALUM, CHIP 3.3uF 20% 20V
C525	1-163-038-91	s	CERAMIC, CHIP 0.1uF 25V
C526	1-163-038-91	s	CERAMIC, CHIP 0.1uF 25V
C527	1-163-038-91	s	CERAMIC, CHIP 0.1uF 25V
C528	1-163-038-91	s	CERAMIC, CHIP 0.1uF 25V
C529	1-163-038-91	s	CERAMIC, CHIP 0.1uF 25V
C530	1-163-038-91	s	CERAMIC, CHIP 0.1uF 25V
C531	1-163-038-91	s	CERAMIC, CHIP 0.1uF 25V
C532	1-163-251-11	s	CERAMIC, CHIP 100pF 5% 50V
C533	1-163-038-91	s	CERAMIC, CHIP 0.1uF 25V
C534	1-163-251-11	s	CERAMIC, CHIP 100pF 5% 50V
C535	1-163-038-91	s	CERAMIC, CHIP 0.1uF 25V
C536	1-163-038-91	s	CERAMIC, CHIP 0.1uF 25V
C537	1-163-275-11	s	CERAMIC, CHIP 0.001uF 5% 50V
C538	1-163-275-11	s	CERAMIC, CHIP 0.001uF 5% 50V
C539	1-163-275-11	s	CERAMIC, CHIP 0.001uF 5% 50V
C540	1-163-275-11	s	CERAMIC, CHIP 0.001uF 5% 50V
C541	1-163-038-91	s	CERAMIC, CHIP 0.1uF 25V
C542	1-163-038-91	s	CERAMIC, CHIP 0.1uF 25V
C543	1-163-038-91	s	CERAMIC, CHIP 0.1uF 25V
C544	1-163-038-91	s	CERAMIC, CHIP 0.1uF 25V
C545	1-163-038-91	s	CERAMIC, CHIP 0.1uF 25V
C546	1-163-038-91	s	CERAMIC, CHIP 0.1uF 25V
C547	1-163-038-91	s	CERAMIC, CHIP 0.1uF 25V
C551	1-163-038-91	s	CERAMIC, CHIP 0.1uF 25V
C553	1-163-038-91	s	CERAMIC, CHIP 0.1uF 25V
C554	1-163-038-91	s	CERAMIC, CHIP 0.1uF 25V
C555	1-163-038-91	s	CERAMIC, CHIP 0.1uF 25V
C556	1-163-038-91	s	CERAMIC, CHIP 0.1uF 25V
C557	1-163-038-91	s	CERAMIC, CHIP 0.1uF 25V
C558	1-163-038-91	s	CERAMIC, CHIP 0.1uF 25V
C559	1-163-038-91	s	CERAMIC, CHIP 0.1uF 25V
C560	1-163-038-91	s	CERAMIC, CHIP 0.1uF 25V
C561	1-163-038-91	s	CERAMIC, CHIP 0.1uF 25V
C562	1-163-038-91	s	CERAMIC, CHIP 0.1uF 25V
C563	1-163-038-91	s	CERAMIC, CHIP 0.1uF 25V
C564	1-126-394-11	s	ELECT, CHIP 10uF 20% 16V
C566	1-163-038-91	s	CERAMIC, CHIP 0.1uF 25V
C567	1-163-038-91	s	CERAMIC, CHIP 0.1uF 25V
C568	1-163-038-91	s	CERAMIC, CHIP 0.1uF 25V
C569	1-163-038-91	s	CERAMIC, CHIP 0.1uF 25V
C570	1-163-038-91	s	CERAMIC, CHIP 0.1uF 25V
C571	1-163-038-91	s	CERAMIC, CHIP 0.1uF 25V
C572	1-163-038-91	s	CERAMIC, CHIP 0.1uF 25V
C573	1-163-038-91	s	CERAMIC, CHIP 0.1uF 25V
C574	1-126-394-11	s	ELECT, CHIP 10uF 20% 16V
C575	1-163-038-91	s	CERAMIC, CHIP 0.1uF 25V
C576	1-163-038-91	s	CERAMIC, CHIP 0.1uF 25V

(DA-119 BOARD; Suffix -12)

Ref. No. or Q'ty	Part No.	SP	Description
C577	1-163-038-91	s	CERAMIC, CHIP 0.1uF 25V
C578	1-163-038-91	s	CERAMIC, CHIP 0.1uF 25V
C579	1-163-038-91	s	CERAMIC, CHIP 0.1uF 25V
C580	1-163-038-91	s	CERAMIC, CHIP 0.1uF 25V
C581	1-126-396-11	s	ELECT, CHIP 47uF 20% 16V
C582	1-126-396-11	s	ELECT, CHIP 47uF 20% 16V
C583	1-163-038-91	s	CERAMIC, CHIP 0.1uF 25V
C584	1-163-038-91	s	CERAMIC, CHIP 0.1uF 25V
C585	1-163-038-91	s	CERAMIC, CHIP 0.1uF 25V
C586	1-163-038-91	s	CERAMIC, CHIP 0.1uF 25V
C587	1-126-396-11	s	ELECT, CHIP 47uF 20% 16V
C588	1-163-038-91	s	CERAMIC, CHIP 0.1uF 25V
C589	1-163-038-91	s	CERAMIC, CHIP 0.1uF 25V
C590	1-126-396-11	s	ELECT, CHIP 47uF 20% 16V
C591	1-163-038-91	s	CERAMIC, CHIP 0.1uF 25V
C592	1-163-038-91	s	CERAMIC, CHIP 0.1uF 25V
C601	1-163-251-11	s	CERAMIC, CHIP 100pF 5% 50V
C602	1-163-251-11	s	CERAMIC, CHIP 100pF 5% 50V
C603	1-163-251-11	s	CERAMIC, CHIP 100pF 5% 50V
C604	1-163-251-11	s	CERAMIC, CHIP 100pF 5% 50V
C605	1-163-139-00	s	CERAMIC, CHIP 820pF 5% 50V
C606	1-163-251-11	s	CERAMIC, CHIP 100pF 5% 50V
C607	1-126-396-11	s	ELECT, CHIP 47uF 20% 16V
C608	1-163-251-11	s	CERAMIC, CHIP 100pF 5% 50V
C609	1-126-400-11	s	ELECT, CHIP 22uF 20% 35V
C610	1-126-400-11	s	ELECT, CHIP 22uF 20% 35V
C611	1-163-235-11	s	CERAMIC, CHIP 22pF 5% 50V
C612	1-163-235-11	s	CERAMIC, CHIP 22pF 5% 50V
C613	1-126-400-11	s	ELECT, CHIP 22uF 20% 35V
C614	1-163-251-11	s	CERAMIC, CHIP 100pF 5% 50V
C615	1-163-251-11	s	CERAMIC, CHIP 100pF 5% 50V
C617	1-126-400-11	s	ELECT, CHIP 22uF 20% 35V
C619	1-126-394-11	s	ELECT, CHIP 10uF 20% 16V
C620	1-126-394-11	s	ELECT, CHIP 10uF 20% 16V
C621	1-163-275-11	s	CERAMIC, CHIP 0.001uF 5% 50V
C622	1-163-038-91	s	CERAMIC, CHIP 0.1uF 25V
C623	1-163-038-91	s	CERAMIC, CHIP 0.1uF 25V
C624	1-163-038-91	s	CERAMIC, CHIP 0.1uF 25V
C625	1-163-235-11	s	CERAMIC, CHIP 22pF 5% 50V
C701	1-163-251-11	s	CERAMIC, CHIP 100pF 5% 50V
C702	1-163-251-11	s	CERAMIC, CHIP 100pF 5% 50V
C703	1-163-251-11	s	CERAMIC, CHIP 100pF 5% 50V
C704	1-163-251-11	s	CERAMIC, CHIP 100pF 5% 50V
C705	1-163-139-00	s	CERAMIC, CHIP 820pF 5% 50V
C706	1-163-251-11	s	CERAMIC, CHIP 100pF 5% 50V
C707	1-126-396-11	s	ELECT, CHIP 47uF 20% 16V
C708	1-163-251-11	s	CERAMIC, CHIP 100pF 5% 50V
C709	1-126-400-11	s	ELECT, CHIP 22uF 20% 35V
C710	1-126-400-11	s	ELECT, CHIP 22uF 20% 35V
C711	1-163-235-11	s	CERAMIC, CHIP 22pF 5% 50V
C712	1-163-235-11	s	CERAMIC, CHIP 22pF 5% 50V
C713	1-126-400-11	s	ELECT, CHIP 22uF 20% 35V
C714	1-163-251-11	s	CERAMIC, CHIP 100pF 5% 50V
C715	1-163-251-11	s	CERAMIC, CHIP 100pF 5% 50V
C717	1-126-400-11	s	ELECT, CHIP 22uF 20% 35V
C719	1-163-275-11	s	CERAMIC, CHIP 0.001uF 5% 50V
C720	1-126-394-11	s	ELECT, CHIP 10uF 20% 16V
C721	1-126-394-11	s	ELECT, CHIP 10uF 20% 16V
C722	1-163-038-91	s	CERAMIC, CHIP 0.1uF 25V

(DA-119 BOARD; Suffix -12)

Ref. No. or Q'ty	Part No.	SP	Description
C723	1-163-038-91	s	CERAMIC, CHIP 0.1uF 25V
C724	1-163-038-91	s	CERAMIC, CHIP 0.1uF 25V
C725	1-163-235-11	s	CERAMIC, CHIP 22pF 5% 50V
C801	1-163-251-11	s	CERAMIC, CHIP 100pF 5% 50V
C802	1-163-251-11	s	CERAMIC, CHIP 100pF 5% 50V
C803	1-163-251-11	s	CERAMIC, CHIP 100pF 5% 50V
C804	1-163-251-11	s	CERAMIC, CHIP 100pF 5% 50V
C805	1-163-139-00	s	CERAMIC, CHIP 820pF 5% 50V
C806	1-163-251-11	s	CERAMIC, CHIP 100pF 5% 50V
C807	1-126-396-11	s	ELECT, CHIP 47uF 20% 16V
C808	1-163-251-11	s	CERAMIC, CHIP 100pF 5% 50V
C809	1-126-400-11	s	ELECT, CHIP 22uF 20% 35V
C810	1-126-400-11	s	ELECT, CHIP 22uF 20% 35V
C811	1-163-235-11	s	CERAMIC, CHIP 22pF 5% 50V
C812	1-163-235-11	s	CERAMIC, CHIP 22pF 5% 50V
C813	1-126-400-11	s	ELECT, CHIP 22uF 20% 35V
C814	1-163-251-11	s	CERAMIC, CHIP 100pF 5% 50V
C815	1-163-251-11	s	CERAMIC, CHIP 100pF 5% 50V
C817	1-126-400-11	s	ELECT, CHIP 22uF 20% 35V
C819	1-163-275-11	s	CERAMIC, CHIP 0.001uF 5% 50V
C820	1-126-394-11	s	ELECT, CHIP 10uF 20% 16V
C821	1-126-394-11	s	ELECT, CHIP 10uF 20% 16V
C822	1-163-038-91	s	CERAMIC, CHIP 0.1uF 25V
C823	1-163-038-91	s	CERAMIC, CHIP 0.1uF 25V
C824	1-163-038-91	s	CERAMIC, CHIP 0.1uF 25V
C825	1-163-235-11	s	CERAMIC, CHIP 22pF 5% 50V
C901	1-163-251-11	s	CERAMIC, CHIP 100pF 5% 50V
C902	1-163-251-11	s	CERAMIC, CHIP 100pF 5% 50V
C903	1-163-251-11	s	CERAMIC, CHIP 100pF 5% 50V
C904	1-163-251-11	s	CERAMIC, CHIP 100pF 5% 50V
C905	1-163-139-00	s	CERAMIC, CHIP 820pF 5% 50V
C906	1-163-251-11	s	CERAMIC, CHIP 100pF 5% 50V
C907	1-126-396-11	s	ELECT, CHIP 47uF 20% 16V
C908	1-163-251-11	s	CERAMIC, CHIP 100pF 5% 50V
C909	1-126-400-11	s	ELECT, CHIP 22uF 20% 35V
C910	1-126-400-11	s	ELECT, CHIP 22uF 20% 35V
C911	1-163-235-11	s	CERAMIC, CHIP 22pF 5% 50V
C912	1-163-235-11	s	CERAMIC, CHIP 22pF 5% 50V
C913	1-126-400-11	s	ELECT, CHIP 22uF 20% 35V
C914	1-163-251-11	s	CERAMIC, CHIP 100pF 5% 50V
C915	1-163-251-11	s	CERAMIC, CHIP 100pF 5% 50V
C916	1-126-400-11	s	ELECT, CHIP 22uF 20% 35V
C919	1-163-275-11	s	CERAMIC, CHIP 0.001uF 5% 50V
C920	1-126-394-11	s	ELECT, CHIP 10uF 20% 16V
C921	1-126-394-11	s	ELECT, CHIP 10uF 20% 16V
C922	1-163-038-91	s	CERAMIC, CHIP 0.1uF 25V
C923	1-163-038-91	s	CERAMIC, CHIP 0.1uF 25V
C924	1-163-038-91	s	CERAMIC, CHIP 0.1uF 25V
C925	1-163-235-11	s	CERAMIC, CHIP 22pF 5% 50V
D101	8-719-989-22	s	LED CL-150R-CD, RED
D102	8-719-989-22	s	LED CL-150R-CD, RED
D103	8-719-989-22	s	LED CL-150R-CD, RED
D104	8-719-989-22	s	LED CL-150R-CD, RED
D301	8-719-041-39	s	DIODE KV1470
D302	8-719-041-39	s	DIODE KV1470
D501	8-719-041-39	s	DIODE KV1470
D502	8-719-041-39	s	DIODE KV1470
D601	8-719-801-48	s	DIODE 1SS193
D602	8-719-820-41	s	DIODE 1SS302

(DA-119 BOARD; Suffix -12)

Ref. No. or Q'ty	Part No.	SP	Description
D603	8-719-820-41	s	DIODE 1SS302
D701	8-719-801-48	s	DIODE 1SS193
D702	8-719-820-41	s	DIODE 1SS302
D703	8-719-820-41	s	DIODE 1SS302
D801	8-719-801-48	s	DIODE 1SS193
D802	8-719-820-41	s	DIODE 1SS302
D803	8-719-820-41	s	DIODE 1SS302
D901	8-719-801-48	s	DIODE 1SS193
D902	8-719-820-41	s	DIODE 1SS302
D903	8-719-820-41	s	DIODE 1SS302
FL501	1-239-719-11	s	FILTER, NOISE, CHIP
FL502	1-239-719-11	s	FILTER, NOISE, CHIP
IC10	8-759-009-07	s	IC MC14053BF
IC11	8-759-009-06	s	IC MC14052BF
IC12	8-759-702-02	s	IC NJM062M
IC13	8-759-157-17	s	IC PQ05SZ1U
IC14	8-759-172-41	s	IC L78M09T-TL
IC15	8-759-068-03	s	IC NJM79L09UA
IC51	8-752-374-96	s	IC CXD2190R-T6
IC52	8-752-374-96	s	IC CXD2190R-T6
IC53	8-759-337-74	s	IC HM62V256LT8Z
IC54	8-759-337-74	s	IC HM62V256LT8Z
IC55	8-759-523-95	s	IC TC74VHC74FT(EL)
IC56	8-759-271-86	s	IC TC7SH04FU
IC101	8-759-700-94	s	IC NJM5532M
IC102	8-759-700-94	s	IC NJM5532M
IC103	8-759-700-94	s	IC NJM5532M
IC104	8-759-700-94	s	IC NJM5532M
IC105	8-759-357-73	s	IC TL32088CNS-E20
IC106	8-759-357-73	s	IC TL32088CNS-E20
IC107	8-759-357-74	s	IC TLC320AD58CDWR
IC108	8-759-357-74	s	IC TLC320AD58CDWR
IC109	8-759-524-09	s	IC TC74VHC153FT(EL)
IC110	8-759-524-09	s	IC TC74VHC153FT(EL)
IC111	8-759-524-09	s	IC TC74VHC153FT(EL)
IC112	8-759-524-09	s	IC TC74VHC153FT(EL)
IC113	8-759-524-09	s	IC TC74VHC153FT(EL)
IC114	8-759-524-09	s	IC TC74VHC153FT(EL)
IC116	8-759-523-43	s	IC TC74ACT157FT(EL)
IC117	8-759-490-41	s	IC TC74VHCT541AFT(EL)
IC118	8-759-326-71	s	IC CXD8517Q
IC119	8-759-326-71	s	IC CXD8517Q
IC120	8-759-524-19	s	IC TC74VHC164FT(EL)
IC121	8-759-491-46	s	IC TC74VHCT04FT(EL)
IC122	8-759-523-79	s	IC TC74VHC02FT(EL)
IC123	8-759-523-95	s	IC TC74VHC74FT(EL)
IC124	8-759-524-19	s	IC TC74VHC164FT(EL)
IC125	8-759-524-19	s	IC TC74VHC164FT(EL)
IC202	8-759-523-95	s	IC TC74VHC74FT(EL)
IC203	8-759-337-74	s	IC HM62V256LT8Z
IC204	8-759-337-74	s	IC HM62V256LT8Z
IC205	8-759-483-02	s	IC CXD8713Q
IC206	8-759-491-47	s	IC TC74VHCT08AFT(EL)
IC207	8-759-491-45	s	IC TC74VHCT00AFT(EL)
IC301	8-759-523-94	s	IC TC74VHC32FT(EL)
IC302	8-759-491-47	s	IC TC74VHCT08AFT(EL)
IC303	8-752-352-30	s	IC CXD2705AQ
IC304	8-752-352-30	s	IC CXD2705AQ

(DA-119 BOARD; Suffix -12)

Ref. No. or Q'ty	Part No.	SP	Description
IC305	8-759-358-23	s	IC MN514256J-45-T
IC306	8-759-358-23	s	IC MN514256J-45-T
IC307	8-752-374-96	s	IC CXD2190R-T6
IC308	8-752-374-96	s	IC CXD2190R-T6
IC309	8-759-337-74	s	IC HM62V256LT8Z
IC310	8-759-337-74	s	IC HM62V256LT8Z
IC313	8-759-362-16	s	IC CXD2913AQ
IC314	8-759-362-16	s	IC CXD2913AQ
IC315	8-759-702-02	s	IC NJM062M
IC316	8-759-702-02	s	IC NJM062M
IC317	8-759-490-41	s	IC TC74VHCT541AFT(EL)
IC318	8-759-524-09	s	IC TC74VHC153FT(EL)
IC401	8-759-523-78	s	IC TC74VHC00FT(EL)
IC403	8-759-466-16	s	IC IDT7164S20Y-TL
IC406	8-759-337-74	s	IC HM62V256LT8Z
IC408	8-759-337-74	s	IC HM62V256LT8Z
IC412	8-759-524-50	s	IC TC74VHC541FT(EL)
IC501	8-759-186-51	s	IC TC74VHC157FS(EL)
IC502	8-752-374-96	s	IC CXD2190R-T6
IC503	8-752-374-96	s	IC CXD2190R-T6
IC504	8-759-337-74	s	IC HM62V256LT8Z
IC505	8-759-337-74	s	IC HM62V256LT8Z
IC509	8-759-362-16	s	IC CXD2913AQ
IC510	8-759-362-16	s	IC CXD2913AQ
IC511	8-759-702-02	s	IC NJM062M
IC512	8-759-702-02	s	IC NJM062M
IC513	8-759-523-95	s	IC TC74VHC74FT(EL)
IC514	8-759-271-86	s	IC TC7SH04FU
IC515	8-759-524-09	s	IC TC74VHC153FT(EL)
IC551	8-759-490-41	s	IC TC74VHCT541AFT(EL)
IC552	8-759-523-43	s	IC TC74ACT157FT(EL)
IC553	8-752-352-30	s	IC CXD2705AQ
IC554	8-752-352-30	s	IC CXD2705AQ
IC555	8-759-358-23	s	IC MN514256J-45-T
IC556	8-759-358-23	s	IC MN514256J-45-T
IC557	8-759-326-71	s	IC CXD8517Q
IC558	8-759-326-71	s	IC CXD8517Q
IC559	8-759-523-78	s	IC TC74VHC00FT(EL)
IC560	8-759-523-95	s	IC TC74VHC74FT(EL)
IC561	8-759-523-95	s	IC TC74VHC74FT(EL)
IC562	8-759-524-50	s	IC TC74VHC541FT(EL)
IC563	8-759-524-19	s	IC TC74VHC164FT(EL)
IC564	8-759-524-19	s	IC TC74VHC164FT(EL)
IC565	8-759-523-79	s	IC TC74VHC02FT(EL)
IC581	8-759-173-51	s	IC SM5872AS-ET
IC582	8-759-173-51	s	IC SM5872AS-ET
IC601	8-759-745-64	s	IC NJM4560M
IC602	8-759-745-64	s	IC NJM4560M
IC603	8-759-745-64	s	IC NJM4560M
IC604	8-759-745-64	s	IC NJM4560M
IC605	8-759-521-14	s	IC NJM5532S-D
IC701	8-759-745-64	s	IC NJM4560M
IC703	8-759-745-64	s	IC NJM4560M
IC704	8-759-745-64	s	IC NJM4560M
IC705	8-759-521-14	s	IC NJM5532S-D
IC801	8-759-745-64	s	IC NJM4560M
IC802	8-759-702-02	s	IC NJM062M
IC803	8-759-702-02	s	IC NJM062M
IC804	8-759-702-02	s	IC NJM062M

(DA-119 BOARD; Suffix -12)

Ref. No. or Q'ty	Part No.	SP	Description
IC805	8-759-521-14	s	IC NJM5532S-D
IC901	8-759-745-64	s	IC NJM4560M
IC903	8-759-702-02	s	IC NJM062M
IC904	8-759-702-02	s	IC NJM062M
IC905	8-759-521-14	s	IC NJM5532S-D
L51	1-410-381-11	s	INDUCTOR, CHIP 10uH
L101	1-410-381-11	s	INDUCTOR, CHIP 10uH
L102	1-410-381-11	s	INDUCTOR, CHIP 10uH
L103	1-410-381-11	s	INDUCTOR, CHIP 10uH
L104	1-410-381-11	s	INDUCTOR, CHIP 10uH
L105	1-410-381-11	s	INDUCTOR, CHIP 10uH
L106	1-410-381-11	s	INDUCTOR, CHIP 10uH
L201	1-410-381-11	s	INDUCTOR, CHIP 10uH
L202	1-410-381-11	s	INDUCTOR, CHIP 10uH
L204	1-410-381-11	s	INDUCTOR, CHIP 10uH
L301	1-410-381-11	s	INDUCTOR, CHIP 10uH
L303	1-410-381-11	s	INDUCTOR, CHIP 10uH
L304	1-410-381-11	s	INDUCTOR, CHIP 10uH
L305	1-410-381-11	s	INDUCTOR, CHIP 10uH
L308	1-410-381-11	s	INDUCTOR, CHIP 10uH
L309	1-410-381-11	s	INDUCTOR, CHIP 10uH
L312	1-410-381-11	s	INDUCTOR, CHIP 10uH
L313	1-410-381-11	s	INDUCTOR, CHIP 10uH
L401	1-410-381-11	s	INDUCTOR, CHIP 10uH
L402	1-410-381-11	s	INDUCTOR, CHIP 10uH
L403	1-410-381-11	s	INDUCTOR, CHIP 10uH
L404	1-410-381-11	s	INDUCTOR, CHIP 10uH
L501	1-410-381-11	s	INDUCTOR, CHIP 10uH
L503	1-410-381-11	s	INDUCTOR, CHIP 10uH
L504	1-410-381-11	s	INDUCTOR, CHIP 10uH
L507	1-410-381-11	s	INDUCTOR, CHIP 10uH
L508	1-410-381-11	s	INDUCTOR, CHIP 10uH
L552	1-410-381-11	s	INDUCTOR, CHIP 10uH
L554	1-410-381-11	s	INDUCTOR, CHIP 10uH
L555	1-410-381-11	s	INDUCTOR, CHIP 10uH
L556	1-410-381-11	s	INDUCTOR, CHIP 10uH
L557	1-410-381-11	s	INDUCTOR, CHIP 10uH
L558	1-410-381-11	s	INDUCTOR, CHIP 10uH
L581	1-410-381-11	s	INDUCTOR, CHIP 10uH
L582	1-410-381-11	s	INDUCTOR, CHIP 10uH
L583	1-410-381-11	s	INDUCTOR, CHIP 10uH
L584	1-410-381-11	s	INDUCTOR, CHIP 10uH
LV301	1-411-984-11	s	COIL, VAR, CHIP
LV302	1-411-984-11	s	COIL, VAR, CHIP
LV501	1-411-984-11	s	COIL, VAR, CHIP
LV502	1-411-984-11	s	COIL, VAR, CHIP
PS10	⚠ 1-576-124-11	s	LINK, IC, CHIP 1A
PS11	⚠ 1-576-124-11	s	LINK, IC, CHIP 1A
PS12	⚠ 1-576-124-11	s	LINK, IC, CHIP 1A
PS13	⚠ 1-576-124-11	s	LINK, IC, CHIP 1A
PS15	⚠ 1-533-282-21	s	LINK, IC, CHIP 2A
PS16	⚠ 1-533-282-21	s	LINK, IC, CHIP 2A
PS17	⚠ 1-576-124-11	s	LINK, IC, CHIP 1A
Q10	1-801-806-11	s	TRANSISTOR DTC144EKA-T146
Q11	1-801-806-11	s	TRANSISTOR DTC144EKA-T146
Q12	1-801-806-11	s	TRANSISTOR DTC144EKA-T146
Q13	8-729-027-38	s	TRANSISTOR DTA144EKA-T146
Q14	8-729-117-32	s	TRANSISTOR 2SC4177

(DA-119 BOARD; Suffix -12)

Ref. No. or Q'ty	Part No.	SP	Description
Q15	1-801-806-11	s	TRANSISTOR DTC144EKA-T146
Q16	8-729-202-38	s	TRANSISTOR 2SC3326N
Q17	8-729-202-38	s	TRANSISTOR 2SC3326N
Q18	8-729-202-38	s	TRANSISTOR 2SC3326N
Q19	8-729-027-38	s	TRANSISTOR DTA144EKA-T146
Q101	8-729-202-38	s	TRANSISTOR 2SC3326N
Q102	8-729-202-38	s	TRANSISTOR 2SC3326N
Q103	8-729-202-38	s	TRANSISTOR 2SC3326N
Q104	8-729-202-38	s	TRANSISTOR 2SC3326N
Q105	8-729-202-38	s	TRANSISTOR 2SC3326N
Q106	8-729-202-38	s	TRANSISTOR 2SC3326N
Q107	8-729-202-38	s	TRANSISTOR 2SC3326N
Q108	8-729-202-38	s	TRANSISTOR 2SC3326N
Q581	1-801-806-11	s	TRANSISTOR DTC144EKA-T146
Q582	1-801-806-11	s	TRANSISTOR DTC144EKA-T146
Q583	1-801-806-11	s	TRANSISTOR DTC144EKA-T146
Q584	1-801-806-11	s	TRANSISTOR DTC144EKA-T146
Q585	1-801-806-11	s	TRANSISTOR DTC144EKA-T146
Q586	8-729-027-38	s	TRANSISTOR DTA144EKA-T146
Q587	8-729-027-38	s	TRANSISTOR DTA144EKA-T146
Q588	8-729-027-38	s	TRANSISTOR DTA144EKA-T146
Q589	8-729-027-38	s	TRANSISTOR DTA144EKA-T146
Q590	8-729-027-38	s	TRANSISTOR DTA144EKA-T146
Q601	8-729-202-38	s	TRANSISTOR 2SC3326N
Q602	8-729-202-38	s	TRANSISTOR 2SC3326N
Q603	8-729-202-38	s	TRANSISTOR 2SC3326N
Q604	8-729-202-38	s	TRANSISTOR 2SC3326N
Q605	8-729-202-38	s	TRANSISTOR 2SC3326N
Q701	8-729-202-38	s	TRANSISTOR 2SC3326N
Q702	8-729-202-38	s	TRANSISTOR 2SC3326N
Q703	8-729-202-38	s	TRANSISTOR 2SC3326N
Q704	8-729-202-38	s	TRANSISTOR 2SC3326N
Q705	8-729-202-38	s	TRANSISTOR 2SC3326N
Q801	8-729-202-38	s	TRANSISTOR 2SC3326N
Q802	8-729-202-38	s	TRANSISTOR 2SC3326N
Q803	8-729-202-38	s	TRANSISTOR 2SC3326N
Q804	8-729-202-38	s	TRANSISTOR 2SC3326N
Q805	8-729-202-38	s	TRANSISTOR 2SC3326N
Q901	8-729-202-38	s	TRANSISTOR 2SC3326N
Q902	8-729-202-38	s	TRANSISTOR 2SC3326N
Q903	8-729-202-38	s	TRANSISTOR 2SC3326N
Q904	8-729-202-38	s	TRANSISTOR 2SC3326N
Q905	8-729-202-38	s	TRANSISTOR 2SC3326N
R11	1-216-073-00	s	METAL, CHIP 10k 5% 1/10W
R12	1-216-073-00	s	METAL, CHIP 10k 5% 1/10W
R13	1-216-073-00	s	METAL, CHIP 10k 5% 1/10W
R14	1-216-073-00	s	METAL, CHIP 10k 5% 1/10W
R15	1-216-073-00	s	METAL, CHIP 10k 5% 1/10W
R16	1-216-057-00	s	METAL, CHIP 2.2k 5% 1/10W
R17	1-216-057-00	s	METAL, CHIP 2.2k 5% 1/10W
R18	1-216-025-91	s	METAL, CHIP 100 5% 1/10W
R19	1-216-081-00	s	METAL, CHIP 22k 5% 1/10W
R20	1-216-081-00	s	METAL, CHIP 22k 5% 1/10W
R21	1-216-025-91	s	METAL, CHIP 100 5% 1/10W
R22	1-216-073-00	s	METAL, CHIP 10k 5% 1/10W
R23	1-216-057-00	s	METAL, CHIP 2.2k 5% 1/10W
R24	1-216-025-91	s	METAL, CHIP 100 5% 1/10W
R25	1-216-073-00	s	METAL, CHIP 10k 5% 1/10W

(DA-119 BOARD; Suffix -12)

Ref. No. or Q'ty	Part No.	SP	Description
R26	1-216-073-00	s	METAL, CHIP 10k 5% 1/10W
R27	1-216-073-00	s	METAL, CHIP 10k 5% 1/10W
R28	1-216-073-00	s	METAL, CHIP 10k 5% 1/10W
R29	1-216-073-00	s	METAL, CHIP 10k 5% 1/10W
R30	1-216-073-00	s	METAL, CHIP 10k 5% 1/10W
R31	1-216-073-00	s	METAL, CHIP 10k 5% 1/10W
R101	1-216-675-11	s	METAL, CHIP 10k 0.5% 1/10W
R102	1-216-675-11	s	METAL, CHIP 10k 0.5% 1/10W
R103	1-216-675-11	s	METAL, CHIP 10k 0.5% 1/10W
R104	1-216-675-11	s	METAL, CHIP 10k 0.5% 1/10W
R105	1-216-675-11	s	METAL, CHIP 10k 0.5% 1/10W
R106	1-216-675-11	s	METAL, CHIP 10k 0.5% 1/10W
R107	1-216-675-11	s	METAL, CHIP 10k 0.5% 1/10W
R108	1-216-675-11	s	METAL, CHIP 10k 0.5% 1/10W
R111	1-216-675-11	s	METAL, CHIP 10k 0.5% 1/10W
R112	1-216-675-11	s	METAL, CHIP 10k 0.5% 1/10W
R113	1-216-675-11	s	METAL, CHIP 10k 0.5% 1/10W
R114	1-216-675-11	s	METAL, CHIP 10k 0.5% 1/10W
R115	1-216-675-11	s	METAL, CHIP 10k 0.5% 1/10W
R116	1-216-675-11	s	METAL, CHIP 10k 0.5% 1/10W
R117	1-216-675-11	s	METAL, CHIP 10k 0.5% 1/10W
R118	1-216-675-11	s	METAL, CHIP 10k 0.5% 1/10W
R119	1-216-073-00	s	METAL, CHIP 10k 5% 1/10W
R120	1-216-073-00	s	METAL, CHIP 10k 5% 1/10W
R121	1-216-073-00	s	METAL, CHIP 10k 5% 1/10W
R122	1-216-073-00	s	METAL, CHIP 10k 5% 1/10W
R123	1-216-667-11	s	METAL, CHIP 4.7k 0.5% 1/10W
R124	1-216-073-00	s	METAL, CHIP 10k 5% 1/10W
R125	1-216-667-11	s	METAL, CHIP 4.7k 0.5% 1/10W
R126	1-216-073-00	s	METAL, CHIP 10k 5% 1/10W
R127	1-216-667-11	s	METAL, CHIP 4.7k 0.5% 1/10W
R128	1-216-073-00	s	METAL, CHIP 10k 5% 1/10W
R129	1-216-667-11	s	METAL, CHIP 4.7k 0.5% 1/10W
R130	1-216-073-00	s	METAL, CHIP 10k 5% 1/10W
R131	1-216-667-11	s	METAL, CHIP 4.7k 0.5% 1/10W
R132	1-216-667-11	s	METAL, CHIP 4.7k 0.5% 1/10W
R133	1-216-667-11	s	METAL, CHIP 4.7k 0.5% 1/10W
R134	1-216-667-11	s	METAL, CHIP 4.7k 0.5% 1/10W
R135	1-216-674-11	s	METAL, CHIP 9.1k 0.5% 1/10W
R136	1-216-674-11	s	METAL, CHIP 9.1k 0.5% 1/10W
R137	1-216-674-11	s	METAL, CHIP 9.1k 0.5% 1/10W
R138	1-216-674-11	s	METAL, CHIP 9.1k 0.5% 1/10W
R139	1-216-073-00	s	METAL, CHIP 10k 5% 1/10W
R140	1-216-073-00	s	METAL, CHIP 10k 5% 1/10W
R141	1-216-073-00	s	METAL, CHIP 10k 5% 1/10W
R142	1-216-073-00	s	METAL, CHIP 10k 5% 1/10W
R143	1-216-667-11	s	METAL, CHIP 4.7k 0.5% 1/10W
R144	1-216-667-11	s	METAL, CHIP 4.7k 0.5% 1/10W
R145	1-216-667-11	s	METAL, CHIP 4.7k 0.5% 1/10W
R146	1-216-667-11	s	METAL, CHIP 4.7k 0.5% 1/10W
R147	1-216-667-11	s	METAL, CHIP 4.7k 0.5% 1/10W
R148	1-216-667-11	s	METAL, CHIP 4.7k 0.5% 1/10W
R149	1-216-667-11	s	METAL, CHIP 4.7k 0.5% 1/10W
R150	1-216-667-11	s	METAL, CHIP 4.7k 0.5% 1/10W
R151	1-216-073-00	s	METAL, CHIP 10k 5% 1/10W
R152	1-216-073-00	s	METAL, CHIP 10k 5% 1/10W
R153	1-216-073-00	s	METAL, CHIP 10k 5% 1/10W
R154	1-216-073-00	s	METAL, CHIP 10k 5% 1/10W
R155	1-216-668-11	s	METAL, CHIP 5.1k 0.5% 1/10W

(DA-119 BOARD; Suffix -12)

Ref. No. or Q'ty	Part No.	SP	Description
R156	1-216-668-11	s	METAL, CHIP 5.1k 0.5% 1/10W
R157	1-216-668-11	s	METAL, CHIP 5.1k 0.5% 1/10W
R158	1-216-668-11	s	METAL, CHIP 5.1k 0.5% 1/10W
R159	1-216-675-11	s	METAL, CHIP 10k 0.5% 1/10W
R160	1-216-675-11	s	METAL, CHIP 10k 0.5% 1/10W
R161	1-216-675-11	s	METAL, CHIP 10k 0.5% 1/10W
R162	1-216-675-11	s	METAL, CHIP 10k 0.5% 1/10W
R163	1-216-091-00	s	METAL, CHIP 56k 5% 1/10W
R164	1-216-091-00	s	METAL, CHIP 56k 5% 1/10W
R165	1-216-091-00	s	METAL, CHIP 56k 5% 1/10W
R166	1-216-091-00	s	METAL, CHIP 56k 5% 1/10W
R167	1-216-025-91	s	METAL, CHIP 100 5% 1/10W
R168	1-216-025-91	s	METAL, CHIP 100 5% 1/10W
R169	1-216-049-91	s	METAL, CHIP 1k 5% 1/10W
R170	1-216-049-91	s	METAL, CHIP 1k 5% 1/10W
R171	1-216-049-91	s	METAL, CHIP 1k 5% 1/10W
R172	1-216-049-91	s	METAL, CHIP 1k 5% 1/10W
R202	1-216-025-91	s	METAL, CHIP 100 5% 1/10W
R203	1-216-025-91	s	METAL, CHIP 100 5% 1/10W
R205	1-216-025-91	s	METAL, CHIP 100 5% 1/10W
R206	1-216-025-91	s	METAL, CHIP 100 5% 1/10W
R207	1-216-025-91	s	METAL, CHIP 100 5% 1/10W
R208	1-216-025-91	s	METAL, CHIP 100 5% 1/10W
R209	1-216-025-91	s	METAL, CHIP 100 5% 1/10W
R210	1-216-025-91	s	METAL, CHIP 100 5% 1/10W
R211	1-216-025-91	s	METAL, CHIP 100 5% 1/10W
R212	1-216-025-91	s	METAL, CHIP 100 5% 1/10W
R213	1-216-025-91	s	METAL, CHIP 100 5% 1/10W
R218	1-216-025-91	s	METAL, CHIP 100 5% 1/10W
R301	1-216-025-91	s	METAL, CHIP 100 5% 1/10W
R303	1-216-025-91	s	METAL, CHIP 100 5% 1/10W
R304	1-216-049-91	s	METAL, CHIP 1k 5% 1/10W
R318	1-216-097-91	s	METAL, CHIP 100k 5% 1/10W
R319	1-216-091-00	s	METAL, CHIP 56k 5% 1/10W
R320	1-216-097-91	s	METAL, CHIP 100k 5% 1/10W
R321	1-216-089-91	s	METAL, CHIP 47k 5% 1/10W
R322	1-216-089-91	s	METAL, CHIP 47k 5% 1/10W
R324	1-216-089-91	s	METAL, CHIP 47k 5% 1/10W
R325	1-216-037-00	s	METAL, CHIP 330 5% 1/10W
R326	1-216-077-00	s	METAL, CHIP 15k 5% 1/10W
R327	1-216-089-91	s	METAL, CHIP 47k 5% 1/10W
R328	1-216-089-91	s	METAL, CHIP 47k 5% 1/10W
R329	1-216-089-91	s	METAL, CHIP 47k 5% 1/10W
R330	1-216-089-91	s	METAL, CHIP 47k 5% 1/10W
R331	1-216-089-91	s	METAL, CHIP 47k 5% 1/10W
R333	1-216-089-91	s	METAL, CHIP 47k 5% 1/10W
R334	1-216-089-91	s	METAL, CHIP 47k 5% 1/10W
R335	1-216-089-91	s	METAL, CHIP 47k 5% 1/10W
R336	1-216-089-91	s	METAL, CHIP 47k 5% 1/10W
R337	1-216-073-00	s	METAL, CHIP 10k 5% 1/10W
R338	1-216-025-91	s	METAL, CHIP 100 5% 1/10W
R404	1-216-295-91	s	RES, CHIP 0
R416	1-216-089-91	s	METAL, CHIP 47k 5% 1/10W
R428	1-216-295-91	s	RES, CHIP 0
R429	1-216-295-91	s	RES, CHIP 0
R430	1-216-295-91	s	RES, CHIP 0
R431	1-216-295-91	s	RES, CHIP 0
R432	1-216-295-91	s	RES, CHIP 0
R433	1-216-295-91	s	RES, CHIP 0

(DA-119 BOARD; Suffix -12)

Ref. No. or Q'ty	Part No.	SP	Description
R440	1-216-025-91	s	METAL, CHIP 100 5% 1/10W
R441	1-216-089-91	s	METAL, CHIP 47k 5% 1/10W
R442	1-216-295-91	s	RES, CHIP 0
R501	1-216-025-91	s	METAL, CHIP 100 5% 1/10W
R502	1-216-025-91	s	METAL, CHIP 100 5% 1/10W
R503	1-216-025-91	s	METAL, CHIP 100 5% 1/10W
R504	1-216-295-91	s	RES, CHIP 0
R506	1-216-295-91	s	RES, CHIP 0
R511	1-216-073-00	s	METAL, CHIP 10k 5% 1/10W
R513	1-216-097-91	s	METAL, CHIP 100k 5% 1/10W
R514	1-216-089-91	s	METAL, CHIP 47k 5% 1/10W
R515	1-216-097-91	s	METAL, CHIP 100k 5% 1/10W
R516	1-216-091-00	s	METAL, CHIP 56k 5% 1/10W
R517	1-216-089-91	s	METAL, CHIP 47k 5% 1/10W
R518	1-216-037-00	s	METAL, CHIP 330 5% 1/10W
R519	1-216-089-91	s	METAL, CHIP 47k 5% 1/10W
R521	1-216-089-91	s	METAL, CHIP 47k 5% 1/10W
R522	1-216-077-00	s	METAL, CHIP 15k 5% 1/10W
R523	1-216-089-91	s	METAL, CHIP 47k 5% 1/10W
R524	1-216-089-91	s	METAL, CHIP 47k 5% 1/10W
R525	1-216-089-91	s	METAL, CHIP 47k 5% 1/10W
R526	1-216-089-91	s	METAL, CHIP 47k 5% 1/10W
R527	1-216-089-91	s	METAL, CHIP 47k 5% 1/10W
R528	1-216-089-91	s	METAL, CHIP 47k 5% 1/10W
R529	1-216-089-91	s	METAL, CHIP 47k 5% 1/10W
R530	1-216-089-91	s	METAL, CHIP 47k 5% 1/10W
R531	1-216-295-91	s	RES, CHIP 0
R532	1-216-073-00	s	METAL, CHIP 10k 5% 1/10W
R555	1-216-049-91	s	METAL, CHIP 1k 5% 1/10W
R556	1-216-025-91	s	METAL, CHIP 100 5% 1/10W
R557	1-216-025-91	s	METAL, CHIP 100 5% 1/10W
R558	1-216-025-91	s	METAL, CHIP 100 5% 1/10W
R581	1-216-049-91	s	METAL, CHIP 1k 5% 1/10W
R582	1-216-081-00	s	METAL, CHIP 22k 5% 1/10W
R583	1-216-081-00	s	METAL, CHIP 22k 5% 1/10W
R584	1-216-081-00	s	METAL, CHIP 22k 5% 1/10W
R585	1-216-081-00	s	METAL, CHIP 22k 5% 1/10W
R586	1-216-073-00	s	METAL, CHIP 10k 5% 1/10W
R601	1-216-675-11	s	METAL, CHIP 10k 0.5% 1/10W
R602	1-216-675-11	s	METAL, CHIP 10k 0.5% 1/10W
R603	1-216-675-11	s	METAL, CHIP 10k 0.5% 1/10W
R604	1-216-675-11	s	METAL, CHIP 10k 0.5% 1/10W
R605	1-216-684-11	s	METAL, CHIP 24k 0.5% 1/10W
R606	1-216-684-11	s	METAL, CHIP 24k 0.5% 1/10W
R607	1-216-677-11	s	METAL, CHIP 12k 0.5% 1/10W
R608	1-216-677-11	s	METAL, CHIP 12k 0.5% 1/10W
R609	1-216-683-11	s	METAL, CHIP 22k 0.5% 1/10W
R610	1-216-073-00	s	METAL, CHIP 10k 5% 1/10W
R611	1-216-683-11	s	METAL, CHIP 22k 0.5% 1/10W
R612	1-216-667-11	s	METAL, CHIP 4.7k 0.5% 1/10W
R613	1-216-674-11	s	METAL, CHIP 9.1k 0.5% 1/10W
R614	1-216-667-11	s	METAL, CHIP 4.7k 0.5% 1/10W
R615	1-216-073-00	s	METAL, CHIP 10k 5% 1/10W
R616	1-216-675-11	s	METAL, CHIP 10k 0.5% 1/10W
R617	1-216-073-00	s	METAL, CHIP 10k 5% 1/10W
R618	1-216-673-11	s	METAL, CHIP 8.2k 0.5% 1/10W
R619	1-216-674-11	s	METAL, CHIP 9.1k 0.5% 1/10W
R620	1-216-667-11	s	METAL, CHIP 4.7k 0.5% 1/10W
R621	1-216-073-00	s	METAL, CHIP 10k 5% 1/10W

(DA-119 BOARD; Suffix -12)

Ref. No. or Q'ty	Part No.	SP	Description
R622	1-216-677-11	s	METAL, CHIP 12k 0.5% 1/10W
R623	1-216-667-11	s	METAL, CHIP 4.7k 0.5% 1/10W
R624	1-216-675-11	s	METAL, CHIP 10k 0.5% 1/10W
R625	1-216-675-11	s	METAL, CHIP 10k 0.5% 1/10W
R626	1-216-667-11	s	METAL, CHIP 4.7k 0.5% 1/10W
R627	1-216-667-11	s	METAL, CHIP 4.7k 0.5% 1/10W
R628	1-216-667-11	s	METAL, CHIP 4.7k 0.5% 1/10W
R629	1-216-667-11	s	METAL, CHIP 4.7k 0.5% 1/10W
R630	1-216-675-11	s	METAL, CHIP 10k 0.5% 1/10W
R631	1-216-675-11	s	METAL, CHIP 10k 0.5% 1/10W
R632	1-216-049-91	s	METAL, CHIP 1k 5% 1/10W
R633	1-216-675-11	s	METAL, CHIP 10k 0.5% 1/10W
R635	1-216-049-91	s	METAL, CHIP 1k 5% 1/10W
R637	1-216-619-11	s	METAL, CHIP 47 0.5% 1/10W
R638	1-216-097-91	s	METAL, CHIP 100k 5% 1/10W
R639	1-216-097-91	s	METAL, CHIP 100k 5% 1/10W
R640	1-216-675-11	s	METAL, CHIP 10k 0.5% 1/10W
R641	1-216-619-11	s	METAL, CHIP 47 0.5% 1/10W
R642	1-220-242-11	s	METAL, CHIP 22 5% 1/4W
R645	1-220-242-11	s	METAL, CHIP 22 5% 1/4W
R648	1-216-037-00	s	METAL, CHIP 330 5% 1/10W
R649	1-216-073-00	s	METAL, CHIP 10k 5% 1/10W
R701	1-216-675-11	s	METAL, CHIP 10k 0.5% 1/10W
R702	1-216-675-11	s	METAL, CHIP 10k 0.5% 1/10W
R703	1-216-675-11	s	METAL, CHIP 10k 0.5% 1/10W
R704	1-216-675-11	s	METAL, CHIP 10k 0.5% 1/10W
R705	1-216-684-11	s	METAL, CHIP 24k 0.5% 1/10W
R706	1-216-684-11	s	METAL, CHIP 24k 0.5% 1/10W
R707	1-216-677-11	s	METAL, CHIP 12k 0.5% 1/10W
R708	1-216-677-11	s	METAL, CHIP 12k 0.5% 1/10W
R709	1-216-683-11	s	METAL, CHIP 22k 0.5% 1/10W
R710	1-216-073-00	s	METAL, CHIP 10k 5% 1/10W
R711	1-216-683-11	s	METAL, CHIP 22k 0.5% 1/10W
R712	1-216-667-11	s	METAL, CHIP 4.7k 0.5% 1/10W
R713	1-216-674-11	s	METAL, CHIP 9.1k 0.5% 1/10W
R714	1-216-667-11	s	METAL, CHIP 4.7k 0.5% 1/10W
R715	1-216-073-00	s	METAL, CHIP 10k 5% 1/10W
R716	1-216-675-11	s	METAL, CHIP 10k 0.5% 1/10W
R717	1-216-073-00	s	METAL, CHIP 10k 5% 1/10W
R718	1-216-673-11	s	METAL, CHIP 8.2k 0.5% 1/10W
R719	1-216-674-11	s	METAL, CHIP 9.1k 0.5% 1/10W
R720	1-216-667-11	s	METAL, CHIP 4.7k 0.5% 1/10W
R721	1-216-073-00	s	METAL, CHIP 10k 5% 1/10W
R722	1-216-677-11	s	METAL, CHIP 12k 0.5% 1/10W
R723	1-216-667-11	s	METAL, CHIP 4.7k 0.5% 1/10W
R724	1-216-675-11	s	METAL, CHIP 10k 0.5% 1/10W
R725	1-216-675-11	s	METAL, CHIP 10k 0.5% 1/10W
R726	1-216-667-11	s	METAL, CHIP 4.7k 0.5% 1/10W
R727	1-216-667-11	s	METAL, CHIP 4.7k 0.5% 1/10W
R728	1-216-667-11	s	METAL, CHIP 4.7k 0.5% 1/10W
R729	1-216-667-11	s	METAL, CHIP 4.7k 0.5% 1/10W
R730	1-216-675-11	s	METAL, CHIP 10k 0.5% 1/10W
R731	1-216-675-11	s	METAL, CHIP 10k 0.5% 1/10W
R732	1-216-049-91	s	METAL, CHIP 1k 5% 1/10W
R733	1-216-675-11	s	METAL, CHIP 10k 0.5% 1/10W
R735	1-216-049-91	s	METAL, CHIP 1k 5% 1/10W
R737	1-216-619-11	s	METAL, CHIP 47 0.5% 1/10W
R738	1-216-097-91	s	METAL, CHIP 100k 5% 1/10W
R739	1-216-097-91	s	METAL, CHIP 100k 5% 1/10W

(DA-119 BOARD; Suffix -12)

Ref. No. or Q'ty	Part No.	SP	Description
R740	1-216-675-11	s	METAL, CHIP 10k 0.5% 1/10W
R741	1-216-619-11	s	METAL, CHIP 47 0.5% 1/10W
R744	1-220-242-11	s	METAL, CHIP 22 5% 1/4W
R747	1-220-242-11	s	METAL, CHIP 22 5% 1/4W
R748	1-216-037-00	s	METAL, CHIP 330 5% 1/10W
R749	1-216-073-00	s	METAL, CHIP 10k 5% 1/10W
R801	1-216-675-11	s	METAL, CHIP 10k 0.5% 1/10W
R802	1-216-675-11	s	METAL, CHIP 10k 0.5% 1/10W
R803	1-216-675-11	s	METAL, CHIP 10k 0.5% 1/10W
R804	1-216-675-11	s	METAL, CHIP 10k 0.5% 1/10W
R805	1-216-684-11	s	METAL, CHIP 24k 0.5% 1/10W
R806	1-216-684-11	s	METAL, CHIP 24k 0.5% 1/10W
R807	1-216-677-11	s	METAL, CHIP 12k 0.5% 1/10W
R808	1-216-677-11	s	METAL, CHIP 12k 0.5% 1/10W
R809	1-216-683-11	s	METAL, CHIP 22k 0.5% 1/10W
R810	1-216-073-00	s	METAL, CHIP 10k 5% 1/10W
R811	1-216-683-11	s	METAL, CHIP 22k 0.5% 1/10W
R812	1-216-667-11	s	METAL, CHIP 4.7k 0.5% 1/10W
R813	1-216-674-11	s	METAL, CHIP 9.1k 0.5% 1/10W
R814	1-216-667-11	s	METAL, CHIP 4.7k 0.5% 1/10W
R815	1-216-073-00	s	METAL, CHIP 10k 5% 1/10W
R816	1-216-675-11	s	METAL, CHIP 10k 0.5% 1/10W
R817	1-216-073-00	s	METAL, CHIP 10k 5% 1/10W
R818	1-216-673-11	s	METAL, CHIP 8.2k 0.5% 1/10W
R819	1-216-674-11	s	METAL, CHIP 9.1k 0.5% 1/10W
R820	1-216-667-11	s	METAL, CHIP 4.7k 0.5% 1/10W
R821	1-216-073-00	s	METAL, CHIP 10k 5% 1/10W
R822	1-216-677-11	s	METAL, CHIP 12k 0.5% 1/10W
R823	1-216-667-11	s	METAL, CHIP 4.7k 0.5% 1/10W
R824	1-216-675-11	s	METAL, CHIP 10k 0.5% 1/10W
R825	1-216-675-11	s	METAL, CHIP 10k 0.5% 1/10W
R826	1-216-667-11	s	METAL, CHIP 4.7k 0.5% 1/10W
R827	1-216-667-11	s	METAL, CHIP 4.7k 0.5% 1/10W
R828	1-216-667-11	s	METAL, CHIP 4.7k 0.5% 1/10W
R829	1-216-667-11	s	METAL, CHIP 4.7k 0.5% 1/10W
R830	1-216-675-11	s	METAL, CHIP 10k 0.5% 1/10W
R831	1-216-675-11	s	METAL, CHIP 10k 0.5% 1/10W
R832	1-216-049-91	s	METAL, CHIP 1k 5% 1/10W
R833	1-216-675-11	s	METAL, CHIP 10k 0.5% 1/10W
R835	1-216-049-91	s	METAL, CHIP 1k 5% 1/10W
R837	1-216-619-11	s	METAL, CHIP 47 0.5% 1/10W
R838	1-216-097-91	s	METAL, CHIP 100k 5% 1/10W
R839	1-216-097-91	s	METAL, CHIP 100k 5% 1/10W
R840	1-216-675-11	s	METAL, CHIP 10k 0.5% 1/10W
R841	1-216-619-11	s	METAL, CHIP 47 0.5% 1/10W
R844	1-220-242-11	s	METAL, CHIP 22 5% 1/4W
R845	1-220-242-11	s	METAL, CHIP 22 5% 1/4W
R848	1-216-037-00	s	METAL, CHIP 330 5% 1/10W
R849	1-216-073-00	s	METAL, CHIP 10k 5% 1/10W
R901	1-216-675-11	s	METAL, CHIP 10k 0.5% 1/10W
R902	1-216-675-11	s	METAL, CHIP 10k 0.5% 1/10W
R903	1-216-675-11	s	METAL, CHIP 10k 0.5% 1/10W
R904	1-216-675-11	s	METAL, CHIP 10k 0.5% 1/10W
R905	1-216-684-11	s	METAL, CHIP 24k 0.5% 1/10W
R906	1-216-684-11	s	METAL, CHIP 24k 0.5% 1/10W
R907	1-216-677-11	s	METAL, CHIP 12k 0.5% 1/10W
R908	1-216-677-11	s	METAL, CHIP 12k 0.5% 1/10W
R909	1-216-683-11	s	METAL, CHIP 22k 0.5% 1/10W
R910	1-216-073-00	s	METAL, CHIP 10k 5% 1/10W

(DA-119 BOARD; Suffix -12)

Ref. No. or Q'ty	Part No.	SP	Description
R911	1-216-683-11	s	METAL, CHIP 22k 0.5% 1/10W
R912	1-216-667-11	s	METAL, CHIP 4.7k 0.5% 1/10W
R913	1-216-674-11	s	METAL, CHIP 9.1k 0.5% 1/10W
R914	1-216-667-11	s	METAL, CHIP 4.7k 0.5% 1/10W
R915	1-216-073-00	s	METAL, CHIP 10k 5% 1/10W
R916	1-216-675-11	s	METAL, CHIP 10k 0.5% 1/10W
R917	1-216-073-00	s	METAL, CHIP 10k 5% 1/10W
R918	1-216-673-11	s	METAL, CHIP 8.2k 0.5% 1/10W
R919	1-216-674-11	s	METAL, CHIP 9.1k 0.5% 1/10W
R920	1-216-667-11	s	METAL, CHIP 4.7k 0.5% 1/10W
R921	1-216-073-00	s	METAL, CHIP 10k 5% 1/10W
R922	1-216-677-11	s	METAL, CHIP 12k 0.5% 1/10W
R923	1-216-667-11	s	METAL, CHIP 4.7k 0.5% 1/10W
R924	1-216-675-11	s	METAL, CHIP 10k 0.5% 1/10W
R925	1-216-675-11	s	METAL, CHIP 10k 0.5% 1/10W
R926	1-216-667-11	s	METAL, CHIP 4.7k 0.5% 1/10W
R927	1-216-667-11	s	METAL, CHIP 4.7k 0.5% 1/10W
R928	1-216-667-11	s	METAL, CHIP 4.7k 0.5% 1/10W
R929	1-216-667-11	s	METAL, CHIP 4.7k 0.5% 1/10W
R930	1-216-675-11	s	METAL, CHIP 10k 0.5% 1/10W
R931	1-216-675-11	s	METAL, CHIP 10k 0.5% 1/10W
R932	1-216-049-91	s	METAL, CHIP 1k 5% 1/10W
R933	1-216-675-11	s	METAL, CHIP 10k 0.5% 1/10W
R935	1-216-049-91	s	METAL, CHIP 1k 5% 1/10W
R937	1-216-619-11	s	METAL, CHIP 47 0.5% 1/10W
R938	1-216-097-91	s	METAL, CHIP 100k 5% 1/10W
R939	1-216-097-91	s	METAL, CHIP 100k 5% 1/10W
R940	1-216-675-11	s	METAL, CHIP 10k 0.5% 1/10W
R941	1-216-619-11	s	METAL, CHIP 47 0.5% 1/10W
R942	1-220-242-11	s	METAL, CHIP 22 5% 1/4W
R947	1-220-242-11	s	METAL, CHIP 22 5% 1/4W
R948	1-216-037-00	s	METAL, CHIP 330 5% 1/10W
R949	1-216-073-00	s	METAL, CHIP 10k 5% 1/10W
RB101	1-239-412-11	s	RESISTOR BLOCK, CHIP 100 x 4
RB102	1-239-412-11	s	RESISTOR BLOCK, CHIP 100 x 4
RB103	1-239-412-11	s	RESISTOR BLOCK, CHIP 100 x 4
RB201	1-239-412-11	s	RESISTOR BLOCK, CHIP 100 x 4
RB202	1-239-389-11	s	RESISTOR BLOCK, CHIP 47k x 4
RB203	1-239-389-11	s	RESISTOR BLOCK, CHIP 47k x 4
RB301	1-239-308-11	s	RESISTOR BLOCK, CHIP 47K x 8
RB302	1-239-412-11	s	RESISTOR BLOCK, CHIP 100 x 4
RB303	1-239-412-11	s	RESISTOR BLOCK, CHIP 100 x 4
RB304	1-239-412-11	s	RESISTOR BLOCK, CHIP 100 x 4
RB305	1-239-412-11	s	RESISTOR BLOCK, CHIP 100 x 4
RB401	1-239-412-11	s	RESISTOR BLOCK, CHIP 100 x 4
RB402	1-239-412-11	s	RESISTOR BLOCK, CHIP 100 x 4
RB403	1-239-412-11	s	RESISTOR BLOCK, CHIP 100 x 4
RB405	1-239-389-11	s	RESISTOR BLOCK, CHIP 47k x 4
RB406	1-239-389-11	s	RESISTOR BLOCK, CHIP 47k x 4
RB408	1-239-389-11	s	RESISTOR BLOCK, CHIP 47k x 4
RB409	1-239-389-11	s	RESISTOR BLOCK, CHIP 47k x 4
RB501	1-239-308-11	s	RESISTOR BLOCK, CHIP 47K x 8
RB502	1-239-412-11	s	RESISTOR BLOCK, CHIP 100 x 4
RB503	1-239-412-11	s	RESISTOR BLOCK, CHIP 100 x 4
RB504	1-239-412-11	s	RESISTOR BLOCK, CHIP 100 x 4
RB505	1-239-412-11	s	RESISTOR BLOCK, CHIP 100 x 4
RB551	1-239-412-11	s	RESISTOR BLOCK, CHIP 100 x 4
RB552	1-239-412-11	s	RESISTOR BLOCK, CHIP 100 x 4

(DA-119 BOARD; Suffix -12)

Ref. No. or Q'ty	Part No.	SP	Description
RV601	1-241-264-11	s	RES, ADJ, METAL 10k
RV701	1-241-264-11	s	RES, ADJ, METAL 10k
RV801	1-241-264-11	s	RES, ADJ, METAL 10k
RV901	1-241-264-11	s	RES, ADJ, METAL 10k
RY601	1-515-716-11	s	RELAY (TQ2-5V)
RY701	1-515-716-11	s	RELAY (TQ2-5V)
RY801	1-515-716-11	s	RELAY (TQ2-5V)
RY901	1-515-716-11	s	RELAY (TQ2-5V)

DA-119 BOARD; Suffix -11

Ref. No.
or Q'ty Part No. SP Description

This list corresponds to the board suffix number -11.

1pc A-8315-280-B s MOUNTED CIRCUIT BOARD, DA-119

The DA-119 board with board suffix number -11 includes the DUS-108 board.
See the list in the DUS-108 board for details.

Ref. No. or Q'ty	Part No.	SP	Description
1pc	7-621-759-45	s	+PSW, 2.6X6
1pc	3-179-084-01	s	LEVER (R), PRINTED CIRCUIT BOARD
1pc	3-179-085-01	s	LEVER (L), PRINTED CIRCUIT BOARD
C10	1-163-038-91	s	CERAMIC, CHIP 0.1uF 25V
C12	1-163-038-91	s	CERAMIC, CHIP 0.1uF 25V
C13	1-163-038-91	s	CERAMIC, CHIP 0.1uF 25V
C14	1-163-038-91	s	CERAMIC, CHIP 0.1uF 25V
C15	1-163-038-91	s	CERAMIC, CHIP 0.1uF 25V
C16	1-163-251-11	s	CERAMIC, CHIP 100pF 5% 50V
C17	1-163-251-11	s	CERAMIC, CHIP 100pF 5% 50V
C18	1-126-394-11	s	ELECT, CHIP 10uF 20% 16V
C19	1-126-394-11	s	ELECT, CHIP 10uF 20% 16V
C20	1-126-394-11	s	ELECT, CHIP 10uF 20% 16V
C21	1-126-394-11	s	ELECT, CHIP 10uF 20% 16V
C22	1-163-038-91	s	CERAMIC, CHIP 0.1uF 25V
C23	1-163-038-91	s	CERAMIC, CHIP 0.1uF 25V
C24	1-163-038-91	s	CERAMIC, CHIP 0.1uF 25V
C25	1-163-038-91	s	CERAMIC, CHIP 0.1uF 25V
C26	1-163-038-91	s	CERAMIC, CHIP 0.1uF 25V
C27	1-163-038-91	s	CERAMIC, CHIP 0.1uF 25V
C28	1-163-038-91	s	CERAMIC, CHIP 0.1uF 25V
C29	1-163-038-91	s	CERAMIC, CHIP 0.1uF 25V
C30	1-126-396-11	s	ELECT, CHIP 47uF 20% 16V
C31	1-126-394-11	s	ELECT, CHIP 10uF 20% 16V
C32	1-126-394-11	s	ELECT, CHIP 10uF 20% 16V
C33	1-126-396-11	s	ELECT, CHIP 47uF 20% 16V
C36	1-126-396-11	s	ELECT, CHIP 47uF 20% 16V
C51	1-163-038-91	s	CERAMIC, CHIP 0.1uF 25V
C52	1-163-038-91	s	CERAMIC, CHIP 0.1uF 25V
C53	1-163-038-91	s	CERAMIC, CHIP 0.1uF 25V
C54	1-163-038-91	s	CERAMIC, CHIP 0.1uF 25V
C55	1-163-038-91	s	CERAMIC, CHIP 0.1uF 25V
C56	1-163-038-91	s	CERAMIC, CHIP 0.1uF 25V
C57	1-163-038-91	s	CERAMIC, CHIP 0.1uF 25V
C58	1-163-038-91	s	CERAMIC, CHIP 0.1uF 25V
C59	1-163-038-91	s	CERAMIC, CHIP 0.1uF 25V
C60	1-163-038-91	s	CERAMIC, CHIP 0.1uF 25V
C61	1-126-394-11	s	ELECT, CHIP 10uF 20% 16V
C101	1-163-113-00	s	CERAMIC, CHIP 68pF 5% 50V
C102	1-163-113-00	s	CERAMIC, CHIP 68pF 5% 50V
C103	1-163-113-00	s	CERAMIC, CHIP 68pF 5% 50V
C104	1-163-113-00	s	CERAMIC, CHIP 68pF 5% 50V
C105	1-163-113-00	s	CERAMIC, CHIP 68pF 5% 50V
C106	1-163-113-00	s	CERAMIC, CHIP 68pF 5% 50V
C107	1-163-113-00	s	CERAMIC, CHIP 68pF 5% 50V
C108	1-163-113-00	s	CERAMIC, CHIP 68pF 5% 50V
C109	1-126-397-11	s	ELECT, CHIP 33uF 20% 25V
C110	1-126-397-11	s	ELECT, CHIP 33uF 20% 25V
C111	1-126-397-11	s	ELECT, CHIP 33uF 20% 25V
C112	1-126-397-11	s	ELECT, CHIP 33uF 20% 25V
C113	1-126-395-11	s	ELECT, CHIP 22uF 20% 16V

(DA-119 BOARD; Suffix -11)

Ref. No. or Q'ty	Part No.	SP	Description
C114	1-126-395-11	s	ELECT, CHIP 22uF 20% 16V
C115	1-126-391-11	s	ELECT, CHIP 47uF 20% 6.3V
C116	1-126-391-11	s	ELECT, CHIP 47uF 20% 6.3V
C117	1-126-391-11	s	ELECT, CHIP 47uF 20% 6.3V
C118	1-126-395-11	s	ELECT, CHIP 22uF 20% 16V
C119	1-126-391-11	s	ELECT, CHIP 47uF 20% 6.3V
C120	1-126-395-11	s	ELECT, CHIP 22uF 20% 16V
C121	1-126-391-11	s	ELECT, CHIP 47uF 20% 6.3V
C122	1-126-391-11	s	ELECT, CHIP 47uF 20% 6.3V
C123	1-126-391-11	s	ELECT, CHIP 47uF 20% 6.3V
C124	1-126-391-11	s	ELECT, CHIP 47uF 20% 6.3V
C125	1-163-251-11	s	CERAMIC, CHIP 100pF 5% 50V
C126	1-163-251-11	s	CERAMIC, CHIP 100pF 5% 50V
C127	1-163-259-91	s	CERAMIC, CHIP 220pF 5% 50V
C128	1-163-251-11	s	CERAMIC, CHIP 100pF 5% 50V
C129	1-163-259-91	s	CERAMIC, CHIP 220pF 5% 50V
C130	1-163-251-11	s	CERAMIC, CHIP 100pF 5% 50V
C131	1-163-259-91	s	CERAMIC, CHIP 220pF 5% 50V
C132	1-163-259-91	s	CERAMIC, CHIP 220pF 5% 50V
C133	1-126-394-11	s	ELECT, CHIP 10uF 20% 16V
C134	1-126-394-11	s	ELECT, CHIP 10uF 20% 16V
C135	1-126-391-11	s	ELECT, CHIP 47uF 20% 6.3V
C136	1-126-391-11	s	ELECT, CHIP 47uF 20% 6.3V
C137	1-163-038-91	s	CERAMIC, CHIP 0.1uF 25V
C138	1-163-038-91	s	CERAMIC, CHIP 0.1uF 25V
C139	1-163-017-00	s	CERAMIC, CHIP 0.0047uF 5% 50V
C140	1-163-017-00	s	CERAMIC, CHIP 0.0047uF 5% 50V
C141	1-163-017-00	s	CERAMIC, CHIP 0.0047uF 5% 50V
C142	1-163-017-00	s	CERAMIC, CHIP 0.0047uF 5% 50V
C143	1-163-017-00	s	CERAMIC, CHIP 0.0047uF 5% 50V
C144	1-163-017-00	s	CERAMIC, CHIP 0.0047uF 5% 50V
C145	1-163-017-00	s	CERAMIC, CHIP 0.0047uF 5% 50V
C146	1-163-017-00	s	CERAMIC, CHIP 0.0047uF 5% 50V
C147	1-126-391-11	s	ELECT, CHIP 47uF 20% 6.3V
C148	1-126-391-11	s	ELECT, CHIP 47uF 20% 6.3V
C149	1-126-391-11	s	ELECT, CHIP 47uF 20% 6.3V
C150	1-126-391-11	s	ELECT, CHIP 47uF 20% 6.3V
C151	1-126-391-11	s	ELECT, CHIP 47uF 20% 6.3V
C152	1-126-391-11	s	ELECT, CHIP 47uF 20% 6.3V
C153	1-163-038-91	s	CERAMIC, CHIP 0.1uF 25V
C154	1-163-038-91	s	CERAMIC, CHIP 0.1uF 25V
C155	1-126-391-11	s	ELECT, CHIP 47uF 20% 6.3V
C156	1-126-391-11	s	ELECT, CHIP 47uF 20% 6.3V
C157	1-163-038-91	s	CERAMIC, CHIP 0.1uF 25V
C158	1-163-038-91	s	CERAMIC, CHIP 0.1uF 25V
C159	1-163-038-91	s	CERAMIC, CHIP 0.1uF 25V
C160	1-163-038-91	s	CERAMIC, CHIP 0.1uF 25V
C161	1-126-394-11	s	ELECT, CHIP 10uF 20% 16V
C162	1-163-038-91	s	CERAMIC, CHIP 0.1uF 25V
C163	1-163-038-91	s	CERAMIC, CHIP 0.1uF 25V
C165	1-163-038-91	s	CERAMIC, CHIP 0.1uF 25V
C166	1-126-394-11	s	ELECT, CHIP 10uF 20% 16V
C167	1-163-038-91	s	CERAMIC, CHIP 0.1uF 25V
C168	1-163-251-11	s	CERAMIC, CHIP 100pF 5% 50V
C169	1-163-251-11	s	CERAMIC, CHIP 100pF 5% 50V
C170	1-163-251-11	s	CERAMIC, CHIP 100pF 5% 50V
C171	1-163-251-11	s	CERAMIC, CHIP 100pF 5% 50V
C172	1-163-121-00	s	CERAMIC, CHIP 150pF 5% 50V
C173	1-163-121-00	s	CERAMIC, CHIP 150pF 5% 50V

(DA-119 BOARD; Suffix -11)

Ref. No. or Q'ty	Part No.	SP	Description
C174	1-163-121-00	s	CERAMIC, CHIP 150pF 5% 50V
C175	1-163-121-00	s	CERAMIC, CHIP 150pF 5% 50V
C176	1-163-038-91	s	CERAMIC, CHIP 0.1uF 25V
C177	1-163-038-91	s	CERAMIC, CHIP 0.1uF 25V
C201	1-126-394-11	s	ELECT, CHIP 10uF 20% 16V
C202	1-126-394-11	s	ELECT, CHIP 10uF 20% 16V
C203	1-163-038-91	s	CERAMIC, CHIP 0.1uF 25V
C204	1-163-038-91	s	CERAMIC, CHIP 0.1uF 25V
C205	1-163-038-91	s	CERAMIC, CHIP 0.1uF 25V
C206	1-163-038-91	s	CERAMIC, CHIP 0.1uF 25V
C207	1-163-038-91	s	CERAMIC, CHIP 0.1uF 25V
C208	1-163-038-91	s	CERAMIC, CHIP 0.1uF 25V
C209	1-163-038-91	s	CERAMIC, CHIP 0.1uF 25V
C210	1-163-038-91	s	CERAMIC, CHIP 0.1uF 25V
C211	1-163-038-91	s	CERAMIC, CHIP 0.1uF 25V
C212	1-163-038-91	s	CERAMIC, CHIP 0.1uF 25V
C213	1-163-038-91	s	CERAMIC, CHIP 0.1uF 25V
C214	1-163-038-91	s	CERAMIC, CHIP 0.1uF 25V
C215	1-163-038-91	s	CERAMIC, CHIP 0.1uF 25V
C216	1-126-394-11	s	ELECT, CHIP 10uF 20% 16V
C217	1-163-038-91	s	CERAMIC, CHIP 0.1uF 25V
C218	1-126-394-11	s	ELECT, CHIP 10uF 20% 16V
C219	1-163-038-91	s	CERAMIC, CHIP 0.1uF 25V
C220	1-126-394-11	s	ELECT, CHIP 10uF 20% 16V
C221	1-163-038-91	s	CERAMIC, CHIP 0.1uF 25V
C222	1-163-038-91	s	CERAMIC, CHIP 0.1uF 25V
C223	1-163-038-91	s	CERAMIC, CHIP 0.1uF 25V
C224	1-163-038-91	s	CERAMIC, CHIP 0.1uF 25V
C225	1-163-038-91	s	CERAMIC, CHIP 0.1uF 25V
C226	1-163-038-91	s	CERAMIC, CHIP 0.1uF 25V
C227	1-163-038-91	s	CERAMIC, CHIP 0.1uF 25V
C228	1-163-038-91	s	CERAMIC, CHIP 0.1uF 25V
C229	1-163-038-91	s	CERAMIC, CHIP 0.1uF 25V
C230	1-163-038-91	s	CERAMIC, CHIP 0.1uF 25V
C231	1-163-038-91	s	CERAMIC, CHIP 0.1uF 25V
C232	1-163-038-91	s	CERAMIC, CHIP 0.1uF 25V
C233	1-163-038-91	s	CERAMIC, CHIP 0.1uF 25V
C234	1-163-038-91	s	CERAMIC, CHIP 0.1uF 25V
C235	1-163-038-91	s	CERAMIC, CHIP 0.1uF 25V
C236	1-163-038-91	s	CERAMIC, CHIP 0.1uF 25V
C237	1-163-038-91	s	CERAMIC, CHIP 0.1uF 25V
C238	1-163-038-91	s	CERAMIC, CHIP 0.1uF 25V
C239	1-163-038-91	s	CERAMIC, CHIP 0.1uF 25V
C240	1-163-038-91	s	CERAMIC, CHIP 0.1uF 25V
C241	1-163-038-91	s	CERAMIC, CHIP 0.1uF 25V
C242	1-163-038-91	s	CERAMIC, CHIP 0.1uF 25V
C243	1-163-038-91	s	CERAMIC, CHIP 0.1uF 25V
C245	1-163-038-91	s	CERAMIC, CHIP 0.1uF 25V
C301	1-163-038-91	s	CERAMIC, CHIP 0.1uF 25V
C302	1-163-038-91	s	CERAMIC, CHIP 0.1uF 25V
C303	1-163-038-91	s	CERAMIC, CHIP 0.1uF 25V
C304	1-163-038-91	s	CERAMIC, CHIP 0.1uF 25V
C305	1-163-038-91	s	CERAMIC, CHIP 0.1uF 25V
C306	1-163-038-91	s	CERAMIC, CHIP 0.1uF 25V
C307	1-163-038-91	s	CERAMIC, CHIP 0.1uF 25V
C308	1-163-038-91	s	CERAMIC, CHIP 0.1uF 25V
C309	1-163-038-91	s	CERAMIC, CHIP 0.1uF 25V
C310	1-163-038-91	s	CERAMIC, CHIP 0.1uF 25V
C311	1-126-394-11	s	ELECT, CHIP 10uF 20% 16V

(DA-119 BOARD; Suffix -11)

Ref. No. or Q'ty	Part No.	SP	Description
C312	1-163-038-91	s	CERAMIC, CHIP 0.1uF 25V
C313	1-163-038-91	s	CERAMIC, CHIP 0.1uF 25V
C314	1-126-394-11	s	ELECT, CHIP 10uF 20% 16V
C315	1-163-038-91	s	CERAMIC, CHIP 0.1uF 25V
C316	1-163-038-91	s	CERAMIC, CHIP 0.1uF 25V
C317	1-163-038-91	s	CERAMIC, CHIP 0.1uF 25V
C318	1-163-038-91	s	CERAMIC, CHIP 0.1uF 25V
C321	1-163-038-91	s	CERAMIC, CHIP 0.1uF 25V
C322	1-163-038-91	s	CERAMIC, CHIP 0.1uF 25V
C323	1-163-038-91	s	CERAMIC, CHIP 0.1uF 25V
C324	1-163-038-91	s	CERAMIC, CHIP 0.1uF 25V
C326	1-163-038-91	s	CERAMIC, CHIP 0.1uF 25V
C328	1-163-038-91	s	CERAMIC, CHIP 0.1uF 25V
C329	1-163-038-91	s	CERAMIC, CHIP 0.1uF 25V
C330	1-163-038-91	s	CERAMIC, CHIP 0.1uF 25V
C331	1-163-038-91	s	CERAMIC, CHIP 0.1uF 25V
C332	1-163-038-91	s	CERAMIC, CHIP 0.1uF 25V
C333	1-163-038-91	s	CERAMIC, CHIP 0.1uF 25V
C334	1-163-038-91	s	CERAMIC, CHIP 0.1uF 25V
C335	1-164-346-11	s	CERAMIC, CHIP 1uF 16V
C337	1-164-346-11	s	CERAMIC, CHIP 1uF 16V
C338	1-163-038-91	s	CERAMIC, CHIP 0.1uF 25V
C339	1-163-038-91	s	CERAMIC, CHIP 0.1uF 25V
C340	1-163-038-91	s	CERAMIC, CHIP 0.1uF 25V
C341	1-163-038-91	s	CERAMIC, CHIP 0.1uF 25V
C342	1-163-038-91	s	CERAMIC, CHIP 0.1uF 25V
C343	1-163-038-91	s	CERAMIC, CHIP 0.1uF 25V
C344	1-163-038-91	s	CERAMIC, CHIP 0.1uF 25V
C345	1-163-251-11	s	CERAMIC, CHIP 100pF 5% 50V
C346	1-163-038-91	s	CERAMIC, CHIP 0.1uF 25V
C347	1-163-251-11	s	CERAMIC, CHIP 100pF 5% 50V
C348	1-163-038-91	s	CERAMIC, CHIP 0.1uF 25V
C349	1-163-038-91	s	CERAMIC, CHIP 0.1uF 25V
C350	1-163-275-11	s	CERAMIC, CHIP 0.001uF 5% 50V
C351	1-163-275-11	s	CERAMIC, CHIP 0.001uF 5% 50V
C352	1-163-275-11	s	CERAMIC, CHIP 0.001uF 5% 50V
C353	1-163-275-11	s	CERAMIC, CHIP 0.001uF 5% 50V
C354	1-163-038-91	s	CERAMIC, CHIP 0.1uF 25V
C355	1-163-038-91	s	CERAMIC, CHIP 0.1uF 25V
C356	1-163-038-91	s	CERAMIC, CHIP 0.1uF 25V
C357	1-163-038-91	s	CERAMIC, CHIP 0.1uF 25V
C358	1-163-038-91	s	CERAMIC, CHIP 0.1uF 25V
C359	1-163-038-91	s	CERAMIC, CHIP 0.1uF 25V
C360	1-163-038-91	s	CERAMIC, CHIP 0.1uF 25V
C362	1-163-038-91	s	CERAMIC, CHIP 0.1uF 25V
C363	1-163-038-91	s	CERAMIC, CHIP 0.1uF 25V
C401	1-126-394-11	s	ELECT, CHIP 10uF 20% 16V
C402	1-126-394-11	s	ELECT, CHIP 10uF 20% 16V
C403	1-163-038-91	s	CERAMIC, CHIP 0.1uF 25V
C405	1-163-038-91	s	CERAMIC, CHIP 0.1uF 25V
C406	1-163-038-91	s	CERAMIC, CHIP 0.1uF 25V
C407	1-163-038-91	s	CERAMIC, CHIP 0.1uF 25V
C408	1-163-038-91	s	CERAMIC, CHIP 0.1uF 25V
C409	1-163-038-91	s	CERAMIC, CHIP 0.1uF 25V
C410	1-163-038-91	s	CERAMIC, CHIP 0.1uF 25V
C411	1-163-038-91	s	CERAMIC, CHIP 0.1uF 25V
C412	1-163-038-91	s	CERAMIC, CHIP 0.1uF 25V
C413	1-163-038-91	s	CERAMIC, CHIP 0.1uF 25V
C415	1-163-038-91	s	CERAMIC, CHIP 0.1uF 25V

(DA-119 BOARD; Suffix -11)

Ref. No. or Q'ty	Part No.	SP	Description
C417	1-126-394-11	s	ELECT, CHIP 10uF 20% 16V
C420	1-163-038-91	s	CERAMIC, CHIP 0.1uF 25V
C426	1-163-038-91	s	CERAMIC, CHIP 0.1uF 25V
C427	1-163-038-91	s	CERAMIC, CHIP 0.1uF 25V
C428	1-163-038-91	s	CERAMIC, CHIP 0.1uF 25V
C430	1-163-038-91	s	CERAMIC, CHIP 0.1uF 25V
C434	1-163-038-91	s	CERAMIC, CHIP 0.1uF 25V
C435	1-163-038-91	s	CERAMIC, CHIP 0.1uF 25V
C437	1-163-038-91	s	CERAMIC, CHIP 0.1uF 25V
C440	1-163-038-91	s	CERAMIC, CHIP 0.1uF 25V
C441	1-163-038-91	s	CERAMIC, CHIP 0.1uF 25V
C442	1-163-038-91	s	CERAMIC, CHIP 0.1uF 25V
C443	1-163-038-91	s	CERAMIC, CHIP 0.1uF 25V
C444	1-163-038-91	s	CERAMIC, CHIP 0.1uF 25V
C445	1-163-038-91	s	CERAMIC, CHIP 0.1uF 25V
C447	1-163-038-91	s	CERAMIC, CHIP 0.1uF 25V
C501	1-163-038-91	s	CERAMIC, CHIP 0.1uF 25V
C502	1-163-038-91	s	CERAMIC, CHIP 0.1uF 25V
C503	1-163-038-91	s	CERAMIC, CHIP 0.1uF 25V
C504	1-163-038-91	s	CERAMIC, CHIP 0.1uF 25V
C505	1-163-038-91	s	CERAMIC, CHIP 0.1uF 25V
C506	1-163-038-91	s	CERAMIC, CHIP 0.1uF 25V
C507	1-163-038-91	s	CERAMIC, CHIP 0.1uF 25V
C508	1-163-038-91	s	CERAMIC, CHIP 0.1uF 25V
C509	1-163-038-91	s	CERAMIC, CHIP 0.1uF 25V
C510	1-163-038-91	s	CERAMIC, CHIP 0.1uF 25V
C511	1-163-038-91	s	CERAMIC, CHIP 0.1uF 25V
C514	1-126-394-11	s	ELECT, CHIP 10uF 20% 16V
C516	1-163-038-91	s	CERAMIC, CHIP 0.1uF 25V
C518	1-163-038-91	s	CERAMIC, CHIP 0.1uF 25V
C519	1-163-038-91	s	CERAMIC, CHIP 0.1uF 25V
C520	1-163-038-91	s	CERAMIC, CHIP 0.1uF 25V
C521	1-164-346-11	s	CERAMIC, CHIP 1uF 16V
C522	1-164-346-11	s	CERAMIC, CHIP 1uF 16V
C525	1-163-038-91	s	CERAMIC, CHIP 0.1uF 25V
C526	1-163-038-91	s	CERAMIC, CHIP 0.1uF 25V
C527	1-163-038-91	s	CERAMIC, CHIP 0.1uF 25V
C528	1-163-038-91	s	CERAMIC, CHIP 0.1uF 25V
C529	1-163-038-91	s	CERAMIC, CHIP 0.1uF 25V
C530	1-163-038-91	s	CERAMIC, CHIP 0.1uF 25V
C531	1-163-038-91	s	CERAMIC, CHIP 0.1uF 25V
C532	1-163-251-11	s	CERAMIC, CHIP 100pF 5% 50V
C533	1-163-038-91	s	CERAMIC, CHIP 0.1uF 25V
C534	1-163-251-11	s	CERAMIC, CHIP 100pF 5% 50V
C535	1-163-038-91	s	CERAMIC, CHIP 0.1uF 25V
C536	1-163-038-91	s	CERAMIC, CHIP 0.1uF 25V
C537	1-163-275-11	s	CERAMIC, CHIP 0.001uF 5% 50V
C538	1-163-275-11	s	CERAMIC, CHIP 0.001uF 5% 50V
C539	1-163-275-11	s	CERAMIC, CHIP 0.001uF 5% 50V
C540	1-163-275-11	s	CERAMIC, CHIP 0.001uF 5% 50V
C541	1-163-038-91	s	CERAMIC, CHIP 0.1uF 25V
C542	1-163-038-91	s	CERAMIC, CHIP 0.1uF 25V
C543	1-163-038-91	s	CERAMIC, CHIP 0.1uF 25V
C544	1-163-038-91	s	CERAMIC, CHIP 0.1uF 25V
C545	1-163-038-91	s	CERAMIC, CHIP 0.1uF 25V
C546	1-163-038-91	s	CERAMIC, CHIP 0.1uF 25V
C547	1-163-038-91	s	CERAMIC, CHIP 0.1uF 25V
C551	1-163-038-91	s	CERAMIC, CHIP 0.1uF 25V
C553	1-163-038-91	s	CERAMIC, CHIP 0.1uF 25V

(DA-119 BOARD; Suffix -11)

Ref. No. or Q'ty	Part No.	SP	Description
C554	1-163-038-91	s	CERAMIC, CHIP 0.1uF 25V
C555	1-163-038-91	s	CERAMIC, CHIP 0.1uF 25V
C556	1-163-038-91	s	CERAMIC, CHIP 0.1uF 25V
C557	1-163-038-91	s	CERAMIC, CHIP 0.1uF 25V
C558	1-163-038-91	s	CERAMIC, CHIP 0.1uF 25V
C559	1-163-038-91	s	CERAMIC, CHIP 0.1uF 25V
C560	1-163-038-91	s	CERAMIC, CHIP 0.1uF 25V
C561	1-163-038-91	s	CERAMIC, CHIP 0.1uF 25V
C562	1-163-038-91	s	CERAMIC, CHIP 0.1uF 25V
C563	1-163-038-91	s	CERAMIC, CHIP 0.1uF 25V
C564	1-126-394-11	s	ELECT, CHIP 10uF 20% 16V
C566	1-163-038-91	s	CERAMIC, CHIP 0.1uF 25V
C567	1-163-038-91	s	CERAMIC, CHIP 0.1uF 25V
C568	1-163-038-91	s	CERAMIC, CHIP 0.1uF 25V
C569	1-163-038-91	s	CERAMIC, CHIP 0.1uF 25V
C570	1-163-038-91	s	CERAMIC, CHIP 0.1uF 25V
C571	1-163-038-91	s	CERAMIC, CHIP 0.1uF 25V
C572	1-163-038-91	s	CERAMIC, CHIP 0.1uF 25V
C573	1-163-038-91	s	CERAMIC, CHIP 0.1uF 25V
C574	1-126-394-11	s	ELECT, CHIP 10uF 20% 16V
C575	1-163-038-91	s	CERAMIC, CHIP 0.1uF 25V
C576	1-163-038-91	s	CERAMIC, CHIP 0.1uF 25V
C577	1-163-038-91	s	CERAMIC, CHIP 0.1uF 25V
C581	1-126-396-11	s	ELECT, CHIP 47uF 20% 16V
C582	1-126-396-11	s	ELECT, CHIP 47uF 20% 16V
C583	1-163-038-91	s	CERAMIC, CHIP 0.1uF 25V
C584	1-163-038-91	s	CERAMIC, CHIP 0.1uF 25V
C585	1-163-038-91	s	CERAMIC, CHIP 0.1uF 25V
C586	1-163-038-91	s	CERAMIC, CHIP 0.1uF 25V
C587	1-126-396-11	s	ELECT, CHIP 47uF 20% 16V
C588	1-163-038-91	s	CERAMIC, CHIP 0.1uF 25V
C589	1-163-038-91	s	CERAMIC, CHIP 0.1uF 25V
C590	1-126-396-11	s	ELECT, CHIP 47uF 20% 16V
C591	1-163-038-91	s	CERAMIC, CHIP 0.1uF 25V
C592	1-163-038-91	s	CERAMIC, CHIP 0.1uF 25V
C601	1-163-251-11	s	CERAMIC, CHIP 100pF 5% 50V
C602	1-163-251-11	s	CERAMIC, CHIP 100pF 5% 50V
C603	1-163-251-11	s	CERAMIC, CHIP 100pF 5% 50V
C604	1-163-251-11	s	CERAMIC, CHIP 100pF 5% 50V
C605	1-163-139-00	s	CERAMIC, CHIP 820pF 5% 50V
C606	1-163-251-11	s	CERAMIC, CHIP 100pF 5% 50V
C607	1-126-396-11	s	ELECT, CHIP 47uF 20% 16V
C608	1-163-251-11	s	CERAMIC, CHIP 100pF 5% 50V
C609	1-126-400-11	s	ELECT, CHIP 22uF 20% 35V
C610	1-126-400-11	s	ELECT, CHIP 22uF 20% 35V
C611	1-163-235-11	s	CERAMIC, CHIP 22pF 5% 50V
C612	1-163-235-11	s	CERAMIC, CHIP 22pF 5% 50V
C613	1-126-400-11	s	ELECT, CHIP 22uF 20% 35V
C614	1-163-251-11	s	CERAMIC, CHIP 100pF 5% 50V
C615	1-163-251-11	s	CERAMIC, CHIP 100pF 5% 50V
C617	1-126-400-11	s	ELECT, CHIP 22uF 20% 35V
C619	1-126-394-11	s	ELECT, CHIP 10uF 20% 16V
C620	1-126-394-11	s	ELECT, CHIP 10uF 20% 16V
C621	1-163-275-11	s	CERAMIC, CHIP 0.001uF 5% 50V
C622	1-163-038-91	s	CERAMIC, CHIP 0.1uF 25V
C623	1-163-038-91	s	CERAMIC, CHIP 0.1uF 25V
C624	1-163-038-91	s	CERAMIC, CHIP 0.1uF 25V
C625	1-163-235-11	s	CERAMIC, CHIP 22pF 5% 50V
C701	1-163-251-11	s	CERAMIC, CHIP 100pF 5% 50V

(DA-119 BOARD; Suffix -11)

Ref. No. or Q'ty	Part No.	SP	Description
C702	1-163-251-11	s	CERAMIC, CHIP 100pF 5% 50V
C703	1-163-251-11	s	CERAMIC, CHIP 100pF 5% 50V
C704	1-163-251-11	s	CERAMIC, CHIP 100pF 5% 50V
C705	1-163-139-00	s	CERAMIC, CHIP 820pF 5% 50V
C706	1-163-251-11	s	CERAMIC, CHIP 100pF 5% 50V
C707	1-126-396-11	s	ELECT, CHIP 47uF 20% 16V
C708	1-163-251-11	s	CERAMIC, CHIP 100pF 5% 50V
C709	1-126-400-11	s	ELECT, CHIP 22uF 20% 35V
C710	1-126-400-11	s	ELECT, CHIP 22uF 20% 35V
C711	1-163-235-11	s	CERAMIC, CHIP 22pF 5% 50V
C712	1-163-235-11	s	CERAMIC, CHIP 22pF 5% 50V
C713	1-126-400-11	s	ELECT, CHIP 22uF 20% 35V
C714	1-163-251-11	s	CERAMIC, CHIP 100pF 5% 50V
C715	1-163-251-11	s	CERAMIC, CHIP 100pF 5% 50V
C717	1-126-400-11	s	ELECT, CHIP 22uF 20% 35V
C719	1-163-275-11	s	CERAMIC, CHIP 0.001uF 5% 50V
C720	1-126-394-11	s	ELECT, CHIP 10uF 20% 16V
C721	1-126-394-11	s	ELECT, CHIP 10uF 20% 16V
C722	1-163-038-91	s	CERAMIC, CHIP 0.1uF 25V
C723	1-163-038-91	s	CERAMIC, CHIP 0.1uF 25V
C724	1-163-038-91	s	CERAMIC, CHIP 0.1uF 25V
C725	1-163-235-11	s	CERAMIC, CHIP 22pF 5% 50V
C801	1-163-251-11	s	CERAMIC, CHIP 100pF 5% 50V
C802	1-163-251-11	s	CERAMIC, CHIP 100pF 5% 50V
C803	1-163-251-11	s	CERAMIC, CHIP 100pF 5% 50V
C804	1-163-251-11	s	CERAMIC, CHIP 100pF 5% 50V
C805	1-163-139-00	s	CERAMIC, CHIP 820pF 5% 50V
C806	1-163-251-11	s	CERAMIC, CHIP 100pF 5% 50V
C807	1-126-396-11	s	ELECT, CHIP 47uF 20% 16V
C808	1-163-251-11	s	CERAMIC, CHIP 100pF 5% 50V
C809	1-126-400-11	s	ELECT, CHIP 22uF 20% 35V
C810	1-126-400-11	s	ELECT, CHIP 22uF 20% 35V
C811	1-163-235-11	s	CERAMIC, CHIP 22pF 5% 50V
C812	1-163-235-11	s	CERAMIC, CHIP 22pF 5% 50V
C813	1-126-400-11	s	ELECT, CHIP 22uF 20% 35V
C814	1-163-251-11	s	CERAMIC, CHIP 100pF 5% 50V
C815	1-163-251-11	s	CERAMIC, CHIP 100pF 5% 50V
C817	1-126-400-11	s	ELECT, CHIP 22uF 20% 35V
C819	1-163-275-11	s	CERAMIC, CHIP 0.001uF 5% 50V
C820	1-126-394-11	s	ELECT, CHIP 10uF 20% 16V
C821	1-126-394-11	s	ELECT, CHIP 10uF 20% 16V
C822	1-163-038-91	s	CERAMIC, CHIP 0.1uF 25V
C823	1-163-038-91	s	CERAMIC, CHIP 0.1uF 25V
C824	1-163-038-91	s	CERAMIC, CHIP 0.1uF 25V
C825	1-163-235-11	s	CERAMIC, CHIP 22pF 5% 50V
C901	1-163-251-11	s	CERAMIC, CHIP 100pF 5% 50V
C902	1-163-251-11	s	CERAMIC, CHIP 100pF 5% 50V
C903	1-163-251-11	s	CERAMIC, CHIP 100pF 5% 50V
C904	1-163-251-11	s	CERAMIC, CHIP 100pF 5% 50V
C905	1-163-139-00	s	CERAMIC, CHIP 820pF 5% 50V
C906	1-163-251-11	s	CERAMIC, CHIP 100pF 5% 50V
C907	1-126-396-11	s	ELECT, CHIP 47uF 20% 16V
C908	1-163-251-11	s	CERAMIC, CHIP 100pF 5% 50V
C909	1-126-400-11	s	ELECT, CHIP 22uF 20% 35V
C910	1-126-400-11	s	ELECT, CHIP 22uF 20% 35V
C911	1-163-235-11	s	CERAMIC, CHIP 22pF 5% 50V
C912	1-163-235-11	s	CERAMIC, CHIP 22pF 5% 50V
C913	1-126-400-11	s	ELECT, CHIP 22uF 20% 35V
C914	1-163-251-11	s	CERAMIC, CHIP 100pF 5% 50V

(DA-119 BOARD; Suffix -11)

Ref. No. or Q'ty	Part No.	SP	Description
C915	1-163-251-11	s	CERAMIC, CHIP 100pF 5% 50V
C916	1-126-400-11	s	ELECT, CHIP 22uF 20% 35V
C919	1-163-275-11	s	CERAMIC, CHIP 0.001uF 5% 50V
C920	1-126-394-11	s	ELECT, CHIP 10uF 20% 16V
C921	1-126-394-11	s	ELECT, CHIP 10uF 20% 16V
C922	1-163-038-91	s	CERAMIC, CHIP 0.1uF 25V
C923	1-163-038-91	s	CERAMIC, CHIP 0.1uF 25V
C924	1-163-038-91	s	CERAMIC, CHIP 0.1uF 25V
C925	1-163-235-11	s	CERAMIC, CHIP 22pF 5% 50V
CNI204	1-251-350-11	o	SOCKET, IC (PLCC) 32P
D101	8-719-989-22	s	LED CL-150R-CD, RED
D102	8-719-989-22	s	LED CL-150R-CD, RED
D103	8-719-989-22	s	LED CL-150R-CD, RED
D104	8-719-989-22	s	LED CL-150R-CD, RED
D201	8-719-404-35	s	DIODE MA141WK
D301	8-719-041-39	s	DIODE KV1470
D302	8-719-041-39	s	DIODE KV1470
D501	8-719-041-39	s	DIODE KV1470
D502	8-719-041-39	s	DIODE KV1470
D601	8-719-801-48	s	DIODE 1SS193
D602	8-719-820-41	s	DIODE 1SS302
D603	8-719-820-41	s	DIODE 1SS302
D701	8-719-801-48	s	DIODE 1SS193
D702	8-719-820-41	s	DIODE 1SS302
D703	8-719-820-41	s	DIODE 1SS302
D801	8-719-801-48	s	DIODE 1SS193
D802	8-719-820-41	s	DIODE 1SS302
D803	8-719-820-41	s	DIODE 1SS302
D901	8-719-801-48	s	DIODE 1SS193
D902	8-719-820-41	s	DIODE 1SS302
D903	8-719-820-41	s	DIODE 1SS302
IC10	8-759-300-71	s	IC HD14053BFP
IC11	8-759-009-06	s	IC MC14052BF
IC12	8-759-702-02	s	IC NJM062M
IC13	8-759-157-17	s	IC PQ05SZ1U
IC14	8-759-172-41	s	IC L78M09T-TL
IC15	8-759-068-03	s	IC NJM79L09UA
IC51	8-752-374-96	s	IC CXD2190R-T6
IC52	8-752-374-96	s	IC CXD2190R-T6
IC53	8-759-337-74	s	IC HM62V256LT8Z
IC54	8-759-337-74	s	IC HM62V256LT8Z
IC101	8-759-700-94	s	IC NJM5532M
IC102	8-759-700-94	s	IC NJM5532M
IC103	8-759-700-94	s	IC NJM5532M
IC104	8-759-700-94	s	IC NJM5532M
IC105	8-759-357-73	s	IC TL32088CNS-E20
IC106	8-759-357-73	s	IC TL32088CNS-E20
IC107	8-759-357-74	s	IC TLC320AD58CDWR
IC108	8-759-357-74	s	IC TLC320AD58CDWR
IC109	8-759-079-73	s	IC TC74VHC153FS(EL)
IC110	8-759-079-73	s	IC TC74VHC153FS(EL)
IC111	8-759-079-73	s	IC TC74VHC153FS(EL)
IC112	8-759-079-73	s	IC TC74VHC153FS(EL)
IC113	8-759-079-73	s	IC TC74VHC153FS(EL)
IC114	8-759-079-73	s	IC TC74VHC153FS(EL)
IC116	8-759-335-02	s	IC TC74ACT157FS(EL)
IC117	8-759-080-03	s	IC TC74VHCT541FS(EL)

(DA-119 BOARD; Suffix -11)

Ref. No. or Q'ty	Part No.	SP	Description
IC118	8-759-326-71	s	IC CXD8517Q
IC119	8-759-326-71	s	IC CXD8517Q
IC202	8-759-337-74	s	IC HM62V256LT8Z
IC203	8-759-337-74	s	IC HM62V256LT8Z
IC205	8-759-455-76	s	IC EPF81500ARC240-3
IC206	8-759-079-53	s	IC TC74VHCT08FS(EL)
IC207	8-759-079-47	s	IC TC74VHCT00FS(EL)
IC301	8-759-079-60	s	IC TC74VHC32FS(EL)
IC302	8-759-079-53	s	IC TC74VHCT08FS(EL)
IC303	8-752-352-30	s	IC CXD2705AQ
IC304	8-752-352-30	s	IC CXD2705AQ
IC305	8-759-358-23	s	IC NN514256J-45-T
IC306	8-759-358-23	s	IC NN514256J-45-T
IC307	8-752-374-96	s	IC CXD2190R-T6
IC308	8-752-374-96	s	IC CXD2190R-T6
IC309	8-759-337-74	s	IC HM62V256LT8Z
IC310	8-759-337-74	s	IC HM62V256LT8Z
IC313	8-759-362-16	s	IC CXD2913AQ
IC314	8-759-362-16	s	IC CXD2913AQ
IC315	8-759-702-02	s	IC NJM062M
IC316	8-759-702-02	s	IC NJM062M
IC317	8-759-080-03	s	IC TC74VHCT541FS(EL)
IC401	8-759-079-46	s	IC TC74VHC00FS(EL)
IC402	8-759-079-61	s	IC TC74VHC74FS(EL)
IC403	8-759-253-96	s	IC IDT7164S20Y
IC405	8-759-079-61	s	IC TC74VHC74FS(EL)
IC406	8-759-337-74	s	IC HM62V256LT8Z
IC408	8-759-337-74	s	IC HM62V256LT8Z
IC409	8-759-079-61	s	IC TC74VHC74FS(EL)
IC410	8-759-079-52	s	IC TC74VHC08FS(EL)
IC411	8-759-079-61	s	IC TC74VHC74FS(EL)
IC412	8-759-080-02	s	IC TC74VHC541FS(EL)
IC501	8-759-186-51	s	IC TC74VHC157F
IC502	8-752-374-96	s	IC CXD2190R-T6
IC503	8-752-374-96	s	IC CXD2190R-T6
IC504	8-759-337-74	s	IC HM62V256LT8Z
IC505	8-759-337-74	s	IC HM62V256LT8Z
IC509	8-759-362-16	s	IC CXD2913AQ
IC510	8-759-362-16	s	IC CXD2913AQ
IC511	8-759-702-02	s	IC NJM062M
IC512	8-759-702-02	s	IC NJM062M
IC551	8-759-080-03	s	IC TC74VHCT541FS(EL)
IC552	8-759-335-02	s	IC TC74ACT157FS(EL)
IC553	8-752-352-30	s	IC CXD2705AQ
IC554	8-752-352-30	s	IC CXD2705AQ
IC555	8-759-358-23	s	IC NN514256J-45-T
IC556	8-759-358-23	s	IC NN514256J-45-T
IC557	8-759-326-71	s	IC CXD8517Q
IC558	8-759-326-71	s	IC CXD8517Q
IC559	8-759-079-46	s	IC TC74VHC00FS(EL)
IC560	8-759-079-61	s	IC TC74VHC74FS(EL)
IC561	8-759-079-61	s	IC TC74VHC74FS(EL)
IC562	8-759-080-02	s	IC TC74VHC541FS(EL)
IC581	8-759-173-51	s	IC SM5872AS-ET
IC582	8-759-173-51	s	IC SM5872AS-ET
IC601	8-759-745-64	s	IC NJM4560M
IC602	8-759-745-64	s	IC NJM4560M
IC603	8-759-745-64	s	IC NJM4560M
IC604	8-759-745-64	s	IC NJM4560M

(DA-119 BOARD; Suffix -11)

Ref. No. or Q'ty	Part No.	SP	Description
IC605	8-759-521-14	s	IC NJM5532S-D
IC701	8-759-745-64	s	IC NJM4560M
IC703	8-759-745-64	s	IC NJM4560M
IC704	8-759-745-64	s	IC NJM4560M
IC705	8-759-521-14	s	IC NJM5532S-D
IC801	8-759-745-64	s	IC NJM4560M
IC802	8-759-702-02	s	IC NJM062M
IC803	8-759-702-02	s	IC NJM062M
IC804	8-759-702-02	s	IC NJM062M
IC805	8-759-521-14	s	IC NJM5532S-D
IC901	8-759-745-64	s	IC NJM4560M
IC903	8-759-702-02	s	IC NJM062M
IC904	8-759-702-02	s	IC NJM062M
IC905	8-759-521-14	s	IC NJM5532S-D
L51	1-410-381-11	s	INDUCTOR, CHIP 10uH
L101	1-410-381-11	s	INDUCTOR, CHIP 10uH
L102	1-410-381-11	s	INDUCTOR, CHIP 10uH
L103	1-410-381-11	s	INDUCTOR, CHIP 10uH
L104	1-410-381-11	s	INDUCTOR, CHIP 10uH
L105	1-410-381-11	s	INDUCTOR, CHIP 10uH
L106	1-410-381-11	s	INDUCTOR, CHIP 10uH
L201	1-410-381-11	s	INDUCTOR, CHIP 10uH
L202	1-410-381-11	s	INDUCTOR, CHIP 10uH
L203	1-410-381-11	s	INDUCTOR, CHIP 10uH
L204	1-410-381-11	s	INDUCTOR, CHIP 10uH
L301	1-410-381-11	s	INDUCTOR, CHIP 10uH
L303	1-410-381-11	s	INDUCTOR, CHIP 10uH
L304	1-410-381-11	s	INDUCTOR, CHIP 10uH
L305	1-410-381-11	s	INDUCTOR, CHIP 10uH
L306	1-410-381-11	s	INDUCTOR, CHIP 10uH
L307	1-410-381-11	s	INDUCTOR, CHIP 10uH
L308	1-410-381-11	s	INDUCTOR, CHIP 10uH
L309	1-410-381-11	s	INDUCTOR, CHIP 10uH
L310	1-410-381-11	s	INDUCTOR, CHIP 10uH
L311	1-410-381-11	s	INDUCTOR, CHIP 10uH
L312	1-410-381-11	s	INDUCTOR, CHIP 10uH
L313	1-410-381-11	s	INDUCTOR, CHIP 10uH
L401	1-410-381-11	s	INDUCTOR, CHIP 10uH
L402	1-410-381-11	s	INDUCTOR, CHIP 10uH
L403	1-410-381-11	s	INDUCTOR, CHIP 10uH
L404	1-410-381-11	s	INDUCTOR, CHIP 10uH
L501	1-410-381-11	s	INDUCTOR, CHIP 10uH
L503	1-410-381-11	s	INDUCTOR, CHIP 10uH
L504	1-410-381-11	s	INDUCTOR, CHIP 10uH
L505	1-410-381-11	s	INDUCTOR, CHIP 10uH
L506	1-410-381-11	s	INDUCTOR, CHIP 10uH
L507	1-410-381-11	s	INDUCTOR, CHIP 10uH
L508	1-410-381-11	s	INDUCTOR, CHIP 10uH
L509	1-410-381-11	s	INDUCTOR, CHIP 10uH
L510	1-410-381-11	s	INDUCTOR, CHIP 10uH
L551	1-410-381-11	s	INDUCTOR, CHIP 10uH
L552	1-410-381-11	s	INDUCTOR, CHIP 10uH
L554	1-410-381-11	s	INDUCTOR, CHIP 10uH
L555	1-410-381-11	s	INDUCTOR, CHIP 10uH
L556	1-410-381-11	s	INDUCTOR, CHIP 10uH
L557	1-410-381-11	s	INDUCTOR, CHIP 10uH
L558	1-410-381-11	s	INDUCTOR, CHIP 10uH
L581	1-410-381-11	s	INDUCTOR, CHIP 10uH
L582	1-410-381-11	s	INDUCTOR, CHIP 10uH

(DA-119 BOARD; Suffix -11)

Ref. No. or Q'ty	Part No.	SP	Description
L583	1-410-381-11	s	INDUCTOR, CHIP 10uH
L584	1-410-381-11	s	INDUCTOR, CHIP 10uH
LV301	1-411-984-11	s	COIL, VAR, CHIP
LV302	1-411-984-11	s	COIL, VAR, CHIP
LV501	1-411-984-11	s	COIL, VAR, CHIP
LV502	1-411-984-11	s	COIL, VAR, CHIP
PS10	⚠ 1-576-124-11	s	LINK, IC, CHIP 1A
PS11	⚠ 1-576-124-11	s	LINK, IC, CHIP 1A
PS12	⚠ 1-576-124-11	s	LINK, IC, CHIP 1A
PS13	⚠ 1-576-124-11	s	LINK, IC, CHIP 1A
PS15	⚠ 1-533-282-21	s	LINK, IC, CHIP 2A
PS16	⚠ 1-533-282-21	s	LINK, IC, CHIP 2A
PS17	⚠ 1-576-124-11	s	LINK, IC, CHIP 1A
Q10	8-729-027-59	s	TRANSISTOR DTC144EKA-T146
Q11	8-729-027-59	s	TRANSISTOR DTC144EKA-T146
Q12	8-729-027-59	s	TRANSISTOR DTC144EKA-T146
Q13	8-729-027-38	s	TRANSISTOR DTA144EKA-T146
Q14	8-729-117-32	s	TRANSISTOR 2SC4177
Q15	8-729-027-59	s	TRANSISTOR DTC144EKA-T146
Q16	8-729-202-38	s	TRANSISTOR 2SC3326N
Q17	8-729-202-38	s	TRANSISTOR 2SC3326N
Q18	8-729-202-38	s	TRANSISTOR 2SC3326N
Q19	8-729-027-38	s	TRANSISTOR DTA144EKA-T146
Q101	8-729-202-38	s	TRANSISTOR 2SC3326N
Q102	8-729-202-38	s	TRANSISTOR 2SC3326N
Q103	8-729-202-38	s	TRANSISTOR 2SC3326N
Q104	8-729-202-38	s	TRANSISTOR 2SC3326N
Q105	8-729-202-38	s	TRANSISTOR 2SC3326N
Q106	8-729-202-38	s	TRANSISTOR 2SC3326N
Q107	8-729-202-38	s	TRANSISTOR 2SC3326N
Q108	8-729-202-38	s	TRANSISTOR 2SC3326N
Q581	8-729-027-59	s	TRANSISTOR DTC144EKA-T146
Q582	8-729-027-59	s	TRANSISTOR DTC144EKA-T146
Q583	8-729-027-59	s	TRANSISTOR DTC144EKA-T146
Q584	8-729-027-59	s	TRANSISTOR DTC144EKA-T146
Q585	8-729-027-59	s	TRANSISTOR DTC144EKA-T146
Q586	8-729-027-38	s	TRANSISTOR DTA144EKA-T146
Q587	8-729-027-38	s	TRANSISTOR DTA144EKA-T146
Q588	8-729-027-38	s	TRANSISTOR DTA144EKA-T146
Q589	8-729-027-38	s	TRANSISTOR DTA144EKA-T146
Q590	8-729-027-38	s	TRANSISTOR DTA144EKA-T146
Q601	8-729-202-38	s	TRANSISTOR 2SC3326N
Q602	8-729-202-38	s	TRANSISTOR 2SC3326N
Q603	8-729-202-38	s	TRANSISTOR 2SC3326N
Q604	8-729-202-38	s	TRANSISTOR 2SC3326N
Q605	8-729-202-38	s	TRANSISTOR 2SC3326N
Q701	8-729-202-38	s	TRANSISTOR 2SC3326N
Q702	8-729-202-38	s	TRANSISTOR 2SC3326N
Q703	8-729-202-38	s	TRANSISTOR 2SC3326N
Q704	8-729-202-38	s	TRANSISTOR 2SC3326N
Q705	8-729-202-38	s	TRANSISTOR 2SC3326N
Q801	8-729-202-38	s	TRANSISTOR 2SC3326N
Q802	8-729-202-38	s	TRANSISTOR 2SC3326N
Q803	8-729-202-38	s	TRANSISTOR 2SC3326N
Q804	8-729-202-38	s	TRANSISTOR 2SC3326N
Q805	8-729-202-38	s	TRANSISTOR 2SC3326N
Q901	8-729-202-38	s	TRANSISTOR 2SC3326N
Q902	8-729-202-38	s	TRANSISTOR 2SC3326N

(DA-119 BOARD; Suffix -11)

Ref. No. or Q'ty	Part No.	SP	Description
Q903	8-729-202-38	s	TRANSISTOR 2SC3326N
Q904	8-729-202-38	s	TRANSISTOR 2SC3326N
Q905	8-729-202-38	s	TRANSISTOR 2SC3326N
R11	1-216-073-00	s	METAL, CHIP 10k 5% 1/10W
R12	1-216-073-00	s	METAL, CHIP 10k 5% 1/10W
R13	1-216-073-00	s	METAL, CHIP 10k 5% 1/10W
R14	1-216-073-00	s	METAL, CHIP 10k 5% 1/10W
R15	1-216-073-00	s	METAL, CHIP 10k 5% 1/10W
R16	1-216-057-00	s	METAL, CHIP 2.2k 5% 1/10W
R17	1-216-057-00	s	METAL, CHIP 2.2k 5% 1/10W
R18	1-216-025-91	s	METAL, CHIP 100 5% 1/10W
R19	1-216-081-00	s	METAL, CHIP 22k 5% 1/10W
R20	1-216-081-00	s	METAL, CHIP 22k 5% 1/10W
R21	1-216-025-91	s	METAL, CHIP 100 5% 1/10W
R23	1-216-057-00	s	METAL, CHIP 2.2k 5% 1/10W
R24	1-216-025-91	s	METAL, CHIP 100 5% 1/10W
R25	1-216-073-00	s	METAL, CHIP 10k 5% 1/10W
R26	1-216-073-00	s	METAL, CHIP 10k 5% 1/10W
R27	1-216-073-00	s	METAL, CHIP 10k 5% 1/10W
R28	1-216-073-00	s	METAL, CHIP 10k 5% 1/10W
R29	1-216-073-00	s	METAL, CHIP 10k 5% 1/10W
R30	1-216-073-00	s	METAL, CHIP 10k 5% 1/10W
R31	1-216-073-00	s	METAL, CHIP 10k 5% 1/10W
R101	1-216-675-11	s	METAL, CHIP 10k 0.5% 1/10W
R102	1-216-675-11	s	METAL, CHIP 10k 0.5% 1/10W
R103	1-216-675-11	s	METAL, CHIP 10k 0.5% 1/10W
R104	1-216-675-11	s	METAL, CHIP 10k 0.5% 1/10W
R105	1-216-675-11	s	METAL, CHIP 10k 0.5% 1/10W
R106	1-216-675-11	s	METAL, CHIP 10k 0.5% 1/10W
R107	1-216-675-11	s	METAL, CHIP 10k 0.5% 1/10W
R108	1-216-675-11	s	METAL, CHIP 10k 0.5% 1/10W
R111	1-216-675-11	s	METAL, CHIP 10k 0.5% 1/10W
R112	1-216-675-11	s	METAL, CHIP 10k 0.5% 1/10W
R113	1-216-675-11	s	METAL, CHIP 10k 0.5% 1/10W
R114	1-216-675-11	s	METAL, CHIP 10k 0.5% 1/10W
R115	1-216-675-11	s	METAL, CHIP 10k 0.5% 1/10W
R116	1-216-675-11	s	METAL, CHIP 10k 0.5% 1/10W
R117	1-216-675-11	s	METAL, CHIP 10k 0.5% 1/10W
R118	1-216-675-11	s	METAL, CHIP 10k 0.5% 1/10W
R119	1-216-073-00	s	METAL, CHIP 10k 5% 1/10W
R120	1-216-073-00	s	METAL, CHIP 10k 5% 1/10W
R121	1-216-073-00	s	METAL, CHIP 10k 5% 1/10W
R122	1-216-073-00	s	METAL, CHIP 10k 5% 1/10W
R123	1-216-667-11	s	METAL, CHIP 4.7k 0.5% 1/10W
R124	1-216-073-00	s	METAL, CHIP 10k 5% 1/10W
R125	1-216-667-11	s	METAL, CHIP 4.7k 0.5% 1/10W
R126	1-216-073-00	s	METAL, CHIP 10k 5% 1/10W
R127	1-216-667-11	s	METAL, CHIP 4.7k 0.5% 1/10W
R128	1-216-073-00	s	METAL, CHIP 10k 5% 1/10W
R129	1-216-667-11	s	METAL, CHIP 4.7k 0.5% 1/10W
R130	1-216-073-00	s	METAL, CHIP 10k 5% 1/10W
R131	1-216-667-11	s	METAL, CHIP 4.7k 0.5% 1/10W
R132	1-216-667-11	s	METAL, CHIP 4.7k 0.5% 1/10W
R133	1-216-667-11	s	METAL, CHIP 4.7k 0.5% 1/10W
R134	1-216-667-11	s	METAL, CHIP 4.7k 0.5% 1/10W
R135	1-216-674-11	s	METAL, CHIP 9.1k 0.5% 1/10W
R136	1-216-674-11	s	METAL, CHIP 9.1k 0.5% 1/10W
R137	1-216-674-11	s	METAL, CHIP 9.1k 0.5% 1/10W

(DA-119 BOARD; Suffix -11)

Ref. No. or Q'ty	Part No.	SP	Description
R138	1-216-674-11	s	METAL, CHIP 9.1k 0.5% 1/10W
R139	1-216-073-00	s	METAL, CHIP 10k 5% 1/10W
R140	1-216-073-00	s	METAL, CHIP 10k 5% 1/10W
R141	1-216-073-00	s	METAL, CHIP 10k 5% 1/10W
R142	1-216-073-00	s	METAL, CHIP 10k 5% 1/10W
R143	1-216-667-11	s	METAL, CHIP 4.7k 0.5% 1/10W
R144	1-216-667-11	s	METAL, CHIP 4.7k 0.5% 1/10W
R145	1-216-667-11	s	METAL, CHIP 4.7k 0.5% 1/10W
R146	1-216-667-11	s	METAL, CHIP 4.7k 0.5% 1/10W
R147	1-216-667-11	s	METAL, CHIP 4.7k 0.5% 1/10W
R148	1-216-667-11	s	METAL, CHIP 4.7k 0.5% 1/10W
R149	1-216-667-11	s	METAL, CHIP 4.7k 0.5% 1/10W
R150	1-216-667-11	s	METAL, CHIP 4.7k 0.5% 1/10W
R151	1-216-073-00	s	METAL, CHIP 10k 5% 1/10W
R152	1-216-073-00	s	METAL, CHIP 10k 5% 1/10W
R153	1-216-073-00	s	METAL, CHIP 10k 5% 1/10W
R154	1-216-073-00	s	METAL, CHIP 10k 5% 1/10W
R155	1-216-668-11	s	METAL, CHIP 5.1k 0.5% 1/10W
R156	1-216-668-11	s	METAL, CHIP 5.1k 0.5% 1/10W
R157	1-216-668-11	s	METAL, CHIP 5.1k 0.5% 1/10W
R158	1-216-668-11	s	METAL, CHIP 5.1k 0.5% 1/10W
R159	1-216-675-11	s	METAL, CHIP 10k 0.5% 1/10W
R160	1-216-675-11	s	METAL, CHIP 10k 0.5% 1/10W
R161	1-216-675-11	s	METAL, CHIP 10k 0.5% 1/10W
R162	1-216-675-11	s	METAL, CHIP 10k 0.5% 1/10W
R163	1-216-091-00	s	METAL, CHIP 56k 5% 1/10W
R164	1-216-091-00	s	METAL, CHIP 56k 5% 1/10W
R165	1-216-091-00	s	METAL, CHIP 56k 5% 1/10W
R166	1-216-091-00	s	METAL, CHIP 56k 5% 1/10W
R167	1-216-025-91	s	METAL, CHIP 100 5% 1/10W
R168	1-216-025-91	s	METAL, CHIP 100 5% 1/10W
R169	1-216-049-91	s	METAL, CHIP 1k 5% 1/10W
R170	1-216-049-91	s	METAL, CHIP 1k 5% 1/10W
R171	1-216-049-91	s	METAL, CHIP 1k 5% 1/10W
R172	1-216-049-91	s	METAL, CHIP 1k 5% 1/10W
R202	1-216-025-91	s	METAL, CHIP 100 5% 1/10W
R203	1-216-025-91	s	METAL, CHIP 100 5% 1/10W
R205	1-216-025-91	s	METAL, CHIP 100 5% 1/10W
R206	1-216-025-91	s	METAL, CHIP 100 5% 1/10W
R207	1-216-025-91	s	METAL, CHIP 100 5% 1/10W
R208	1-216-025-91	s	METAL, CHIP 100 5% 1/10W
R209	1-216-025-91	s	METAL, CHIP 100 5% 1/10W
R210	1-216-025-91	s	METAL, CHIP 100 5% 1/10W
R211	1-216-025-91	s	METAL, CHIP 100 5% 1/10W
R212	1-216-025-91	s	METAL, CHIP 100 5% 1/10W
R213	1-216-025-91	s	METAL, CHIP 100 5% 1/10W
R214	1-216-073-00	s	METAL, CHIP 10k 5% 1/10W
R215	1-216-025-91	s	METAL, CHIP 100 5% 1/10W
R216	1-216-049-91	s	METAL, CHIP 1k 5% 1/10W
R217	1-216-089-91	s	METAL, CHIP 47k 5% 1/10W
R218	1-216-025-91	s	METAL, CHIP 100 5% 1/10W
R219	1-216-049-91	s	METAL, CHIP 1k 5% 1/10W
R301	1-216-025-91	s	METAL, CHIP 100 5% 1/10W
R303	1-216-025-91	s	METAL, CHIP 100 5% 1/10W
R304	1-216-049-91	s	METAL, CHIP 1k 5% 1/10W
R305	1-216-295-91	s	RES, CHIP 0
R306	1-216-295-91	s	RES, CHIP 0
R315	1-216-295-91	s	RES, CHIP 0
R316	1-216-073-00	s	METAL, CHIP 10k 5% 1/10W

(DA-119 BOARD; Suffix -11)

Ref. No. or Q'ty	Part No.	SP	Description
R317	1-216-073-00	s	METAL, CHIP 10k 5% 1/10W
R318	1-216-097-91	s	METAL, CHIP 100k 5% 1/10W
R319	1-216-091-00	s	METAL, CHIP 56k 5% 1/10W
R320	1-216-097-91	s	METAL, CHIP 100k 5% 1/10W
R321	1-216-091-00	s	METAL, CHIP 56k 5% 1/10W
R322	1-216-089-91	s	METAL, CHIP 47k 5% 1/10W
R324	1-216-089-91	s	METAL, CHIP 47k 5% 1/10W
R325	1-216-049-91	s	METAL, CHIP 1k 5% 1/10W
R326	1-216-077-00	s	METAL, CHIP 15k 5% 1/10W
R327	1-216-089-91	s	METAL, CHIP 47k 5% 1/10W
R328	1-216-089-91	s	METAL, CHIP 47k 5% 1/10W
R329	1-216-089-91	s	METAL, CHIP 47k 5% 1/10W
R330	1-216-089-91	s	METAL, CHIP 47k 5% 1/10W
R331	1-216-089-91	s	METAL, CHIP 47k 5% 1/10W
R333	1-216-089-91	s	METAL, CHIP 47k 5% 1/10W
R334	1-216-089-91	s	METAL, CHIP 47k 5% 1/10W
R335	1-216-089-91	s	METAL, CHIP 47k 5% 1/10W
R336	1-216-089-91	s	METAL, CHIP 47k 5% 1/10W
R337	1-216-073-00	s	METAL, CHIP 10k 5% 1/10W
R338	1-216-025-91	s	METAL, CHIP 100 5% 1/10W
R404	1-216-025-91	s	METAL, CHIP 100 5% 1/10W
R411	1-216-295-91	s	RES, CHIP 0
R416	1-216-089-91	s	METAL, CHIP 47k 5% 1/10W
R428	1-216-295-91	s	RES, CHIP 0
R429	1-216-295-91	s	RES, CHIP 0
R430	1-216-295-91	s	RES, CHIP 0
R431	1-216-295-91	s	RES, CHIP 0
R432	1-216-295-91	s	RES, CHIP 0
R433	1-216-295-91	s	RES, CHIP 0
R440	1-216-025-91	s	METAL, CHIP 100 5% 1/10W
R441	1-216-089-91	s	METAL, CHIP 47k 5% 1/10W
R442	1-216-025-91	s	METAL, CHIP 100 5% 1/10W
R501	1-216-025-91	s	METAL, CHIP 100 5% 1/10W
R502	1-216-025-91	s	METAL, CHIP 100 5% 1/10W
R503	1-216-025-91	s	METAL, CHIP 100 5% 1/10W
R504	1-216-295-91	s	RES, CHIP 0
R506	1-216-295-91	s	RES, CHIP 0
R513	1-216-097-91	s	METAL, CHIP 100k 5% 1/10W
R514	1-216-091-00	s	METAL, CHIP 56k 5% 1/10W
R515	1-216-097-91	s	METAL, CHIP 100k 5% 1/10W
R516	1-216-091-00	s	METAL, CHIP 56k 5% 1/10W
R517	1-216-089-91	s	METAL, CHIP 47k 5% 1/10W
R518	1-216-049-91	s	METAL, CHIP 1k 5% 1/10W
R519	1-216-089-91	s	METAL, CHIP 47k 5% 1/10W
R521	1-216-089-91	s	METAL, CHIP 47k 5% 1/10W
R522	1-216-077-00	s	METAL, CHIP 15k 5% 1/10W
R523	1-216-089-91	s	METAL, CHIP 47k 5% 1/10W
R524	1-216-089-91	s	METAL, CHIP 47k 5% 1/10W
R525	1-216-089-91	s	METAL, CHIP 47k 5% 1/10W
R526	1-216-089-91	s	METAL, CHIP 47k 5% 1/10W
R527	1-216-089-91	s	METAL, CHIP 47k 5% 1/10W
R528	1-216-089-91	s	METAL, CHIP 47k 5% 1/10W
R529	1-216-089-91	s	METAL, CHIP 47k 5% 1/10W
R530	1-216-089-91	s	METAL, CHIP 47k 5% 1/10W
R531	1-216-295-91	s	RES, CHIP 0
R532	1-216-073-00	s	METAL, CHIP 10k 5% 1/10W
R555	1-216-049-91	s	METAL, CHIP 1k 5% 1/10W
R556	1-216-025-91	s	METAL, CHIP 100 5% 1/10W
R557	1-216-025-91	s	METAL, CHIP 100 5% 1/10W

(DA-119 BOARD; Suffix -11)

Ref. No. or Q'ty	Part No.	SP	Description
R558	1-216-025-91	s	METAL, CHIP 100 5% 1/10W
R581	1-216-049-91	s	METAL, CHIP 1k 5% 1/10W
R582	1-216-081-00	s	METAL, CHIP 22k 5% 1/10W
R583	1-216-081-00	s	METAL, CHIP 22k 5% 1/10W
R584	1-216-081-00	s	METAL, CHIP 22k 5% 1/10W
R585	1-216-081-00	s	METAL, CHIP 22k 5% 1/10W
R586	1-216-073-00	s	METAL, CHIP 10k 5% 1/10W
R601	1-216-675-11	s	METAL, CHIP 10k 0.5% 1/10W
R602	1-216-675-11	s	METAL, CHIP 10k 0.5% 1/10W
R603	1-216-675-11	s	METAL, CHIP 10k 0.5% 1/10W
R604	1-216-675-11	s	METAL, CHIP 10k 0.5% 1/10W
R605	1-216-684-91	s	METAL, CHIP 24k 0.5% 1/10W
R606	1-216-684-91	s	METAL, CHIP 24k 0.5% 1/10W
R607	1-216-677-11	s	METAL, CHIP 12k 0.5% 1/10W
R608	1-216-677-11	s	METAL, CHIP 12k 0.5% 1/10W
R609	1-216-683-11	s	METAL, CHIP 22k 0.5% 1/10W
R610	1-216-073-00	s	METAL, CHIP 10k 5% 1/10W
R611	1-216-683-11	s	METAL, CHIP 22k 0.5% 1/10W
R612	1-216-667-11	s	METAL, CHIP 4.7k 0.5% 1/10W
R613	1-216-674-11	s	METAL, CHIP 9.1k 0.5% 1/10W
R614	1-216-667-11	s	METAL, CHIP 4.7k 0.5% 1/10W
R615	1-216-073-00	s	METAL, CHIP 10k 5% 1/10W
R616	1-216-675-11	s	METAL, CHIP 10k 0.5% 1/10W
R617	1-216-073-00	s	METAL, CHIP 10k 5% 1/10W
R618	1-216-673-11	s	METAL, CHIP 8.2k 0.5% 1/10W
R619	1-216-674-11	s	METAL, CHIP 9.1k 0.5% 1/10W
R620	1-216-667-11	s	METAL, CHIP 4.7k 0.5% 1/10W
R621	1-216-073-00	s	METAL, CHIP 10k 5% 1/10W
R622	1-216-677-11	s	METAL, CHIP 12k 0.5% 1/10W
R623	1-216-667-11	s	METAL, CHIP 4.7k 0.5% 1/10W
R624	1-216-675-11	s	METAL, CHIP 10k 0.5% 1/10W
R625	1-216-675-11	s	METAL, CHIP 10k 0.5% 1/10W
R626	1-216-667-11	s	METAL, CHIP 4.7k 0.5% 1/10W
R627	1-216-667-11	s	METAL, CHIP 4.7k 0.5% 1/10W
R628	1-216-667-11	s	METAL, CHIP 4.7k 0.5% 1/10W
R629	1-216-667-11	s	METAL, CHIP 4.7k 0.5% 1/10W
R630	1-216-675-11	s	METAL, CHIP 10k 0.5% 1/10W
R631	1-216-675-11	s	METAL, CHIP 10k 0.5% 1/10W
R632	1-216-651-11	s	METAL, CHIP 1k 0.5% 1/10W
R633	1-216-675-11	s	METAL, CHIP 10k 0.5% 1/10W
R635	1-216-651-11	s	METAL, CHIP 1k 0.5% 1/10W
R637	1-216-619-11	s	METAL, CHIP 47 0.5% 1/10W
R638	1-216-097-91	s	METAL, CHIP 100k 5% 1/10W
R639	1-216-097-91	s	METAL, CHIP 100k 5% 1/10W
R640	1-216-675-11	s	METAL, CHIP 10k 0.5% 1/10W
R641	1-216-619-11	s	METAL, CHIP 47 0.5% 1/10W
R642	1-220-242-11	s	METAL, CHIP 22 5% 1/4W
R645	1-220-242-11	s	METAL, CHIP 22 5% 1/4W
R648	1-216-037-00	s	METAL, CHIP 330 5% 1/10W
R649	1-216-073-00	s	METAL, CHIP 10k 5% 1/10W
R701	1-216-675-11	s	METAL, CHIP 10k 0.5% 1/10W
R702	1-216-675-11	s	METAL, CHIP 10k 0.5% 1/10W
R703	1-216-675-11	s	METAL, CHIP 10k 0.5% 1/10W
R704	1-216-675-11	s	METAL, CHIP 10k 0.5% 1/10W
R705	1-216-684-91	s	METAL, CHIP 24k 0.5% 1/10W
R706	1-216-684-91	s	METAL, CHIP 24k 0.5% 1/10W
R707	1-216-677-11	s	METAL, CHIP 12k 0.5% 1/10W
R708	1-216-677-11	s	METAL, CHIP 12k 0.5% 1/10W
R709	1-216-683-11	s	METAL, CHIP 22k 0.5% 1/10W

(DA-119 BOARD; Suffix -11)

Ref. No. or Q'ty	Part No.	SP	Description
R710	1-216-073-00	s	METAL, CHIP 10k 5% 1/10W
R711	1-216-683-11	s	METAL, CHIP 22k 0.5% 1/10W
R712	1-216-667-11	s	METAL, CHIP 4.7k 0.5% 1/10W
R713	1-216-674-11	s	METAL, CHIP 9.1k 0.5% 1/10W
R714	1-216-667-11	s	METAL, CHIP 4.7k 0.5% 1/10W
R715	1-216-073-00	s	METAL, CHIP 10k 5% 1/10W
R716	1-216-675-11	s	METAL, CHIP 10k 0.5% 1/10W
R717	1-216-073-00	s	METAL, CHIP 10k 5% 1/10W
R718	1-216-673-11	s	METAL, CHIP 8.2k 0.5% 1/10W
R719	1-216-674-11	s	METAL, CHIP 9.1k 0.5% 1/10W
R720	1-216-667-11	s	METAL, CHIP 4.7k 0.5% 1/10W
R721	1-216-073-00	s	METAL, CHIP 10k 5% 1/10W
R722	1-216-677-11	s	METAL, CHIP 12k 0.5% 1/10W
R723	1-216-667-11	s	METAL, CHIP 4.7k 0.5% 1/10W
R724	1-216-675-11	s	METAL, CHIP 10k 0.5% 1/10W
R725	1-216-675-11	s	METAL, CHIP 10k 0.5% 1/10W
R726	1-216-667-11	s	METAL, CHIP 4.7k 0.5% 1/10W
R727	1-216-667-11	s	METAL, CHIP 4.7k 0.5% 1/10W
R728	1-216-667-11	s	METAL, CHIP 4.7k 0.5% 1/10W
R729	1-216-667-11	s	METAL, CHIP 4.7k 0.5% 1/10W
R730	1-216-675-11	s	METAL, CHIP 10k 0.5% 1/10W
R731	1-216-675-11	s	METAL, CHIP 10k 0.5% 1/10W
R732	1-216-651-11	s	METAL, CHIP 1k 0.5% 1/10W
R733	1-216-675-11	s	METAL, CHIP 10k 0.5% 1/10W
R735	1-216-651-11	s	METAL, CHIP 1k 0.5% 1/10W
R737	1-216-619-11	s	METAL, CHIP 47 0.5% 1/10W
R738	1-216-097-91	s	METAL, CHIP 100k 5% 1/10W
R739	1-216-097-91	s	METAL, CHIP 100k 5% 1/10W
R740	1-216-675-11	s	METAL, CHIP 10k 0.5% 1/10W
R741	1-216-619-11	s	METAL, CHIP 47 0.5% 1/10W
R744	1-220-242-11	s	METAL, CHIP 22 5% 1/4W
R747	1-220-242-11	s	METAL, CHIP 22 5% 1/4W
R748	1-216-037-00	s	METAL, CHIP 330 5% 1/10W
R749	1-216-073-00	s	METAL, CHIP 10k 5% 1/10W
R801	1-216-675-11	s	METAL, CHIP 10k 0.5% 1/10W
R802	1-216-675-11	s	METAL, CHIP 10k 0.5% 1/10W
R803	1-216-675-11	s	METAL, CHIP 10k 0.5% 1/10W
R804	1-216-675-11	s	METAL, CHIP 10k 0.5% 1/10W
R805	1-216-684-91	s	METAL, CHIP 24k 0.5% 1/10W
R806	1-216-684-91	s	METAL, CHIP 24k 0.5% 1/10W
R807	1-216-677-11	s	METAL, CHIP 12k 0.5% 1/10W
R808	1-216-677-11	s	METAL, CHIP 12k 0.5% 1/10W
R809	1-216-677-11	s	METAL, CHIP 12k 0.5% 1/10W
R810	1-216-073-00	s	METAL, CHIP 10k 5% 1/10W
R811	1-216-683-11	s	METAL, CHIP 22k 0.5% 1/10W
R812	1-216-667-11	s	METAL, CHIP 4.7k 0.5% 1/10W
R813	1-216-674-11	s	METAL, CHIP 9.1k 0.5% 1/10W
R814	1-216-667-11	s	METAL, CHIP 4.7k 0.5% 1/10W
R815	1-216-073-00	s	METAL, CHIP 10k 5% 1/10W
R816	1-216-675-11	s	METAL, CHIP 10k 0.5% 1/10W
R817	1-216-073-00	s	METAL, CHIP 10k 5% 1/10W
R818	1-216-673-11	s	METAL, CHIP 8.2k 0.5% 1/10W
R819	1-216-674-11	s	METAL, CHIP 9.1k 0.5% 1/10W
R820	1-216-667-11	s	METAL, CHIP 4.7k 0.5% 1/10W
R821	1-216-073-00	s	METAL, CHIP 10k 5% 1/10W
R822	1-216-677-11	s	METAL, CHIP 12k 0.5% 1/10W
R823	1-216-667-11	s	METAL, CHIP 4.7k 0.5% 1/10W
R824	1-216-675-11	s	METAL, CHIP 10k 0.5% 1/10W
R825	1-216-675-11	s	METAL, CHIP 10k 0.5% 1/10W

(DA-119 BOARD; Suffix -11)

Ref. No. or Q'ty	Part No.	SP	Description
R826	1-216-667-11	s	METAL, CHIP 4.7k 0.5% 1/10W
R827	1-216-667-11	s	METAL, CHIP 4.7k 0.5% 1/10W
R828	1-216-667-11	s	METAL, CHIP 4.7k 0.5% 1/10W
R829	1-216-667-11	s	METAL, CHIP 4.7k 0.5% 1/10W
R830	1-216-675-11	s	METAL, CHIP 10k 0.5% 1/10W
R831	1-216-675-11	s	METAL, CHIP 10k 0.5% 1/10W
R832	1-216-651-11	s	METAL, CHIP 1k 0.5% 1/10W
R833	1-216-675-11	s	METAL, CHIP 10k 0.5% 1/10W
R835	1-216-651-11	s	METAL, CHIP 1k 0.5% 1/10W
R837	1-216-619-11	s	METAL, CHIP 47 0.5% 1/10W
R838	1-216-097-91	s	METAL, CHIP 100k 5% 1/10W
R839	1-216-097-91	s	METAL, CHIP 100k 5% 1/10W
R840	1-216-675-11	s	METAL, CHIP 10k 0.5% 1/10W
R841	1-216-619-11	s	METAL, CHIP 47 0.5% 1/10W
R844	1-220-242-11	s	METAL, CHIP 22 5% 1/4W
R845	1-220-242-11	s	METAL, CHIP 22 5% 1/4W
R848	1-216-037-00	s	METAL, CHIP 330 5% 1/10W
R849	1-216-073-00	s	METAL, CHIP 10k 5% 1/10W
R901	1-216-675-11	s	METAL, CHIP 10k 0.5% 1/10W
R902	1-216-675-11	s	METAL, CHIP 10k 0.5% 1/10W
R903	1-216-675-11	s	METAL, CHIP 10k 0.5% 1/10W
R904	1-216-675-11	s	METAL, CHIP 10k 0.5% 1/10W
R905	1-216-684-91	s	METAL, CHIP 24k 0.5% 1/10W
R906	1-216-684-91	s	METAL, CHIP 24k 0.5% 1/10W
R907	1-216-677-11	s	METAL, CHIP 12k 0.5% 1/10W
R908	1-216-677-11	s	METAL, CHIP 12k 0.5% 1/10W
R909	1-216-683-11	s	METAL, CHIP 22k 0.5% 1/10W
R910	1-216-073-00	s	METAL, CHIP 10k 5% 1/10W
R911	1-216-683-11	s	METAL, CHIP 22k 0.5% 1/10W
R912	1-216-667-11	s	METAL, CHIP 4.7k 0.5% 1/10W
R913	1-216-674-11	s	METAL, CHIP 9.1k 0.5% 1/10W
R914	1-216-667-11	s	METAL, CHIP 4.7k 0.5% 1/10W
R915	1-216-073-00	s	METAL, CHIP 10k 5% 1/10W
R916	1-216-675-11	s	METAL, CHIP 10k 0.5% 1/10W
R917	1-216-073-00	s	METAL, CHIP 10k 5% 1/10W
R918	1-216-673-11	s	METAL, CHIP 8.2k 0.5% 1/10W
R919	1-216-674-11	s	METAL, CHIP 9.1k 0.5% 1/10W
R920	1-216-667-11	s	METAL, CHIP 4.7k 0.5% 1/10W
R921	1-216-073-00	s	METAL, CHIP 10k 5% 1/10W
R922	1-216-677-11	s	METAL, CHIP 12k 0.5% 1/10W
R923	1-216-667-11	s	METAL, CHIP 4.7k 0.5% 1/10W
R924	1-216-675-11	s	METAL, CHIP 10k 0.5% 1/10W
R925	1-216-675-11	s	METAL, CHIP 10k 0.5% 1/10W
R926	1-216-667-11	s	METAL, CHIP 4.7k 0.5% 1/10W
R927	1-216-667-11	s	METAL, CHIP 4.7k 0.5% 1/10W
R928	1-216-667-11	s	METAL, CHIP 4.7k 0.5% 1/10W
R929	1-216-667-11	s	METAL, CHIP 4.7k 0.5% 1/10W
R930	1-216-675-11	s	METAL, CHIP 10k 0.5% 1/10W
R931	1-216-675-11	s	METAL, CHIP 10k 0.5% 1/10W
R932	1-216-651-11	s	METAL, CHIP 1k 0.5% 1/10W
R933	1-216-675-11	s	METAL, CHIP 10k 0.5% 1/10W
R935	1-216-651-11	s	METAL, CHIP 1k 0.5% 1/10W
R937	1-216-619-11	s	METAL, CHIP 47 0.5% 1/10W
R938	1-216-097-91	s	METAL, CHIP 100k 5% 1/10W
R939	1-216-097-91	s	METAL, CHIP 100k 5% 1/10W
R940	1-216-675-11	s	METAL, CHIP 10k 0.5% 1/10W
R941	1-216-619-11	s	METAL, CHIP 47 0.5% 1/10W
R942	1-220-242-11	s	METAL, CHIP 22 5% 1/4W
R947	1-220-242-11	s	METAL, CHIP 22 5% 1/4W

(DA-119 BOARD; Suffix -11)

Ref. No. or Q'ty	Part No.	SP	Description
R948	1-216-037-00	s	METAL, CHIP 330 5% 1/10W
R949	1-216-073-00	s	METAL, CHIP 10k 5% 1/10W
RB101	1-239-412-11	s	RESISTOR BLOCK, CHIP 100 x 4
RB102	1-239-412-11	s	RESISTOR BLOCK, CHIP 100 x 4
RB103	1-239-412-11	s	RESISTOR BLOCK, CHIP 100 x 4
RB201	1-239-412-11	s	RESISTOR BLOCK, CHIP 100 x 4
RB202	1-239-389-11	s	RESISTOR BLOCK, CHIP 47k x 4
RB203	1-239-389-11	s	RESISTOR BLOCK, CHIP 47k x 4
RB301	1-239-308-11	s	RESISTOR BLOCK, CHIP 47k x 8
RB302	1-239-412-11	s	RESISTOR BLOCK, CHIP 100 x 4
RB303	1-239-412-11	s	RESISTOR BLOCK, CHIP 100 x 4
RB304	1-239-412-11	s	RESISTOR BLOCK, CHIP 100 x 4
RB305	1-239-412-11	s	RESISTOR BLOCK, CHIP 100 x 4
RB401	1-239-412-11	s	RESISTOR BLOCK, CHIP 100 x 4
RB402	1-239-412-11	s	RESISTOR BLOCK, CHIP 100 x 4
RB403	1-239-412-11	s	RESISTOR BLOCK, CHIP 100 x 4
RB404	1-239-389-11	s	RESISTOR BLOCK, CHIP 47k x 4
RB405	1-239-389-11	s	RESISTOR BLOCK, CHIP 47k x 4
RB406	1-239-389-11	s	RESISTOR BLOCK, CHIP 47k x 4
RB407	1-239-389-11	s	RESISTOR BLOCK, CHIP 47k x 4
RB408	1-239-389-11	s	RESISTOR BLOCK, CHIP 47k x 4
RB409	1-239-389-11	s	RESISTOR BLOCK, CHIP 47k x 4
RB410	1-239-389-11	s	RESISTOR BLOCK, CHIP 47k x 4
RB501	1-239-308-11	s	RESISTOR BLOCK, CHIP 47k x 8
RB502	1-239-412-11	s	RESISTOR BLOCK, CHIP 100 x 4
RB503	1-239-412-11	s	RESISTOR BLOCK, CHIP 100 x 4
RB504	1-239-412-11	s	RESISTOR BLOCK, CHIP 100 x 4
RB505	1-239-412-11	s	RESISTOR BLOCK, CHIP 100 x 4
RB551	1-239-412-11	s	RESISTOR BLOCK, CHIP 100 x 4
RB552	1-239-412-11	s	RESISTOR BLOCK, CHIP 100 x 4
RV601	1-241-264-11	s	RES, ADJ, METAL 10k
RV701	1-241-264-11	s	RES, ADJ, METAL 10k
RV801	1-241-264-11	s	RES, ADJ, METAL 10k
RV901	1-241-264-11	s	RES, ADJ, METAL 10k
RY601	1-515-716-11	s	RELAY
RY701	1-515-716-11	s	RELAY
RY801	1-515-716-11	s	RELAY
RY901	1-515-716-11	s	RELAY

DUS-101 BOARD

The IO-149/A board has the DUS-101 board, depending on the product serial numbers, as shown below:

Serial number; 10001 through 10430 (For DSR-80 J)
Serial number; 10001 through 10470 (For DSR-80 UC)
Serial number; 10001 through 10320 (For DSR-80P CE)

Ref. No. or Q'ty	Part No.	SP	Description
1pc	A-8316-077-A	o	MOUNTED CIRCUIT BOARD, DUS-101
C1	1-163-259-91	s	CERAMIC, CHIP 220pF 5% 50V
C2	1-163-275-11	s	CERAMIC, CHIP 0.001uF 5% 50V
C3	1-163-038-91	s	CERAMIC, CHIP 0.1uF 25V
C4	1-163-038-91	s	CERAMIC, CHIP 0.1uF 25V
D1	8-719-941-09	s	DIODE DAP202U
IC1	8-759-032-01	s	IC MC74HC00AF
IC2	8-759-032-23	s	IC MC74HC74AF
R1	1-216-073-00	s	METAL, CHIP 10k 5% 1/10W
R2	1-216-081-00	s	METAL, CHIP 22k 5% 1/10W

DUS-108 BOARD

The DA-119 board has the DUS-108 board, depending on the product serial numbers, as shown below:

Serial number; 10001 through 10430 (For DSR-80 J)
Serial number; 10001 through 10470 (For DSR-80 UC)
Serial number; 10001 through 10320 (For DSR-80P CE)

Ref. No. or Q'ty	Part No.	SP	Description
1pc	A-8316-289-A	s	MOUNTED CIRCUIT BOARD, DUS-108
C1	1-109-994-11	s	CERAMIC, CHIP 2.2uF 10% 10V
C2	1-163-243-11	s	CERAMIC, CHIP 47pF 5% 50V
C3	1-164-004-11	s	CERAMIC, CHIP 0.1uF 10% 25V
C4	1-164-004-11	s	CERAMIC, CHIP 0.1uF 10% 25V
C5	1-164-004-11	s	CERAMIC, CHIP 0.1uF 10% 25V
C6	1-164-004-11	s	CERAMIC, CHIP 0.1uF 10% 25V
IC1	8-759-329-61	s	IC SN74LS123NS-E05
IC2	8-759-050-92	s	IC SN74HC164APW-E05
IC3	8-759-049-58	s	IC SN74HC04APW-E05
IC4	8-759-049-56	s	IC SN74HC02APW-E05
IC5	8-759-049-98	s	IC SN74HC74APW-E05
IC6	8-759-050-92	s	IC SN74HC164APW-E05
R1	1-216-683-11	s	METAL, CHIP 22k 0.5% 1/10W
R2	1-216-683-11	s	METAL, CHIP 22k 0.5% 1/10W
R3	1-216-049-91	s	METAL, CHIP 1k 5% 1/10W
R5	1-216-683-11	s	METAL, CHIP 22k 0.5% 1/10W
R6	1-218-760-11	s	METAL, CHIP 220k 0.5% 1/10W

DUS-131 BOARD

Ref. No. or Q'ty	Part No.	SP	Description

The RP-101 board has the DUS-131 board, depending on the product serial numbers, as shown below:

Serial number; 10431 through 10780 (For DSR-80 J)
Serial number; 10471 through 11750 (For DSR-80 UC)
Serial number; 10321 through 11470 (For DSR-80P CE)

C1001	1-104-851-11	s	TANTALUM, CHIP 10uF 20% 10V
C1002	1-163-038-91	s	CERAMIC, CHIP 0.1uF 25V
IC1001	8-759-196-97	s	IC TC7SH32FU-TE85R

DV-15/15A BOARD; Suffix -13, 14

Ref. No. or Q'ty	Part No.	SP	Description

This list corresponds to the board suffix numbers -13 and -14.

1pc	A-8315-282-A	s	MOUNTED CIRCUIT BOARD, DV-15 [For NTSC]
1pc	A-8315-301-A	s	MOUNTED CIRCUIT BOARD, DV-15A [For PAL]
1pc	7-621-759-45	s	+PSW, 2.6x6
1pc	3-179-084-01	s	LEVER (R), PRINTED CIRCUIT BOARD
1pc	3-179-085-01	s	LEVER (L), PRINTED CIRCUIT BOARD
C11	1-163-038-91	s	CERAMIC, CHIP 0.1uF 25V
C12	1-163-038-91	s	CERAMIC, CHIP 0.1uF 25V
C13	1-163-038-91	s	CERAMIC, CHIP 0.1uF 25V
C14	1-126-394-11	s	ELECT, CHIP 10uF 20% 16V
C15	1-126-396-11	s	ELECT, CHIP 47uF 20% 16V
C16	1-163-038-91	s	CERAMIC, CHIP 0.1uF 25V
C101	1-163-222-11	s	CERAMIC, CHIP 5pF 50V
C102	1-163-222-11	s	CERAMIC, CHIP 5pF 50V
C103	1-163-038-91	s	CERAMIC, CHIP 0.1uF 25V
C104	1-126-394-11	s	ELECT, CHIP 10uF 20% 16V
C105	1-163-038-91	s	CERAMIC, CHIP 0.1uF 25V
C106	1-163-038-91	s	CERAMIC, CHIP 0.1uF 25V
C107	1-163-038-91	s	CERAMIC, CHIP 0.1uF 25V
C108	1-163-275-11	s	CERAMIC, CHIP 0.001uF 5% 50V
C109	1-163-809-11	s	CERAMIC, CHIP 0.047uF 10% 25V
C110	1-163-275-11	s	CERAMIC, CHIP 0.001uF 5% 50V
C111	1-163-275-11	s	CERAMIC, CHIP 0.001uF 5% 50V
C112	1-135-179-21	s	TANTALUM, CHIP 2.2uF 10% 16V
C113	1-163-251-11	s	CERAMIC, CHIP 100pF 5% 50V
C114	1-163-038-91	s	CERAMIC, CHIP 0.1uF 25V
C115	1-126-394-11	s	ELECT, CHIP 10uF 20% 16V
C116	1-163-038-91	s	CERAMIC, CHIP 0.1uF 25V
C117	1-163-038-91	s	CERAMIC, CHIP 0.1uF 25V
C118	1-163-038-91	s	CERAMIC, CHIP 0.1uF 25V
C119	1-163-275-11	s	CERAMIC, CHIP 0.001uF 5% 50V
C120	1-163-809-11	s	CERAMIC, CHIP 0.047uF 10% 25V
C121	1-163-275-11	s	CERAMIC, CHIP 0.001uF 5% 50V
C122	1-163-275-11	s	CERAMIC, CHIP 0.001uF 5% 50V
C123	1-135-179-21	s	TANTALUM, CHIP 2.2uF 10% 16V
C124	1-163-038-91	s	CERAMIC, CHIP 0.1uF 25V
C151	1-163-038-91	s	CERAMIC, CHIP 0.1uF 25V
C152	1-163-038-91	s	CERAMIC, CHIP 0.1uF 25V
C153	1-163-038-91	s	CERAMIC, CHIP 0.1uF 25V
C154	1-163-038-91	s	CERAMIC, CHIP 0.1uF 25V
C155	1-163-038-91	s	CERAMIC, CHIP 0.1uF 25V
C156	1-163-038-91	s	CERAMIC, CHIP 0.1uF 25V
C201	1-126-394-11	s	ELECT, CHIP 10uF 20% 16V
C202	1-163-038-91	s	CERAMIC, CHIP 0.1uF 25V
C203	1-163-038-91	s	CERAMIC, CHIP 0.1uF 25V
C204	1-126-394-11	s	ELECT, CHIP 10uF 20% 16V
C205	1-126-401-11	s	ELECT, CHIP 1uF 20% 50V
C206	1-163-038-91	s	CERAMIC, CHIP 0.1uF 25V
C208	1-164-182-11	s	CERAMIC, CHIP 0.0033uF 10% 100V
C210	1-164-182-11	s	CERAMIC, CHIP 0.0033uF 10% 100V
C211	1-163-251-11	s	CERAMIC, CHIP 100pF 5% 50V

(DV-15/15A BOARD; Suffix -13, 14)

Ref. No. or Q'ty	Part No.	SP	Description
C212	1-104-912-11	s	TANTALUM, CHIP 3.3uF 20% 16V
C213	1-163-089-00	s	CERAMIC, CHIP 6pF 50V
C214	1-163-251-11	s	CERAMIC, CHIP 100pF 5% 50V
C215	1-163-231-11	s	CERAMIC, CHIP 15pF 5% 50V
C216	1-163-038-91	s	CERAMIC, CHIP 0.1uF 25V
C217	1-163-251-11	s	CERAMIC, CHIP 100pF 5% 50V
C218	1-163-038-91	s	CERAMIC, CHIP 0.1uF 25V
C230	1-163-038-91	s	CERAMIC, CHIP 0.1uF 25V
C231	1-163-038-91	s	CERAMIC, CHIP 0.1uF 25V
C240	1-163-038-91	s	CERAMIC, CHIP 0.1uF 25V
C241	1-163-038-91	s	CERAMIC, CHIP 0.1uF 25V [For NTSC]
C243	1-126-394-11	s	ELECT, CHIP 10uF 20% 16V [For NTSC]
C246	1-163-038-91	s	CERAMIC, CHIP 0.1uF 25V [For NTSC]
C247	1-163-038-91	s	CERAMIC, CHIP 0.1uF 25V [For NTSC]
C248	1-163-227-11	s	CERAMIC, CHIP 10pF 5% 50V[For NTSC]
C249	1-163-227-11	s	CERAMIC, CHIP 10pF 5% 50V[For NTSC]
C250	1-135-190-21	s	TANTALUM, CHIP 0.1uF 20% 20V[For NTSC]
C251	1-126-396-11	s	ELECT, CHIP 47uF 20% 16V
C252	1-126-396-11	s	ELECT, CHIP 47uF 20% 16V
C253	1-163-038-91	s	CERAMIC, CHIP 0.1uF 25V
C254	1-163-038-91	s	CERAMIC, CHIP 0.1uF 25V
C255	1-126-394-11	s	ELECT, CHIP 10uF 20% 16V [For NTSC]
C256	1-104-851-11	s	TANTALUM, CHIP 10uF 20% 10V
C257	1-104-851-11	s	TANTALUM, CHIP 10uF 20% 10V
C258	1-104-851-11	s	TANTALUM, CHIP 10uF 20% 10V
C259	1-104-851-11	s	TANTALUM, CHIP 10uF 20% 10V
C260	1-163-038-91	s	CERAMIC, CHIP 0.1uF 25V
C261	1-163-227-11	s	CERAMIC, CHIP 10pF 5% 50V
C262	1-163-038-91	s	CERAMIC, CHIP 0.1uF 25V
C263	1-163-227-11	s	CERAMIC, CHIP 10pF 5% 50V
C264	1-163-038-91	s	CERAMIC, CHIP 0.1uF 25V
C265	1-163-251-11	s	CERAMIC, CHIP 100pF 5% 50V
C266	1-163-038-91	s	CERAMIC, CHIP 0.1uF 25V
C269	1-163-038-91	s	CERAMIC, CHIP 0.1uF 25V
C270	1-135-145-11	s	TANTALUM, CHIP 0.47uF 10% 35V
C273	1-163-251-11	s	CERAMIC, CHIP 100pF 5% 50V
C276	1-126-396-11	s	ELECT, CHIP 47uF 20% 16V
C278	1-163-038-91	s	CERAMIC, CHIP 0.1uF 25V
C279	1-163-038-91	s	CERAMIC, CHIP 0.1uF 25V
C281	1-163-038-91	s	CERAMIC, CHIP 0.1uF 25V
C282	1-163-038-91	s	CERAMIC, CHIP 0.1uF 25V
C283	1-163-251-11	s	CERAMIC, CHIP 100pF 5% 50V
C284	1-163-038-91	s	CERAMIC, CHIP 0.1uF 25V
C285	1-163-227-11	s	CERAMIC, CHIP 10pF 5% 50V
C286	1-163-038-91	s	CERAMIC, CHIP 0.1uF 25V
C287	1-163-038-91	s	CERAMIC, CHIP 0.1uF 25V
C289	1-163-038-91	s	CERAMIC, CHIP 0.1uF 25V
C290	1-163-038-91	s	CERAMIC, CHIP 0.1uF 25V
C291	1-163-275-11	s	CERAMIC, CHIP 0.001uF 5% 50V
C292	1-163-038-91	s	CERAMIC, CHIP 0.1uF 25V
C293	1-163-038-91	s	CERAMIC, CHIP 0.1uF 25V
C294	1-135-145-11	s	TANTALUM, CHIP 0.47uF 10% 35V
C298	1-163-038-91	s	CERAMIC, CHIP 0.1uF 25V
C299	1-163-038-91	s	CERAMIC, CHIP 0.1uF 25V
C300	1-163-038-91	s	CERAMIC, CHIP 0.1uF 25V
C301	1-126-394-11	s	ELECT, CHIP 10uF 20% 16V
C302	1-163-038-91	s	CERAMIC, CHIP 0.1uF 25V
C303	1-163-038-91	s	CERAMIC, CHIP 0.1uF 25V
C304	1-163-038-91	s	CERAMIC, CHIP 0.1uF 25V

(DV-15/15A BOARD; Suffix -13, 14)

Ref. No. or Q'ty	Part No.	SP	Description
C305	1-163-235-11	s	CERAMIC, CHIP 22pF 5% 50V
C311	1-163-038-91	s	CERAMIC, CHIP 0.1uF 25V
C312	1-163-038-91	s	CERAMIC, CHIP 0.1uF 25V
C313	1-163-038-91	s	CERAMIC, CHIP 0.1uF 25V
C315	1-163-038-91	s	CERAMIC, CHIP 0.1uF 25V
C316	1-163-038-91	s	CERAMIC, CHIP 0.1uF 25V
C317	1-163-038-91	s	CERAMIC, CHIP 0.1uF 25V
C319	1-163-038-91	s	CERAMIC, CHIP 0.1uF 25V
C320	1-163-038-91	s	CERAMIC, CHIP 0.1uF 25V
C321	1-163-038-91	s	CERAMIC, CHIP 0.1uF 25V
C323	1-163-038-91	s	CERAMIC, CHIP 0.1uF 25V
C324	1-163-038-91	s	CERAMIC, CHIP 0.1uF 25V
C325	1-163-038-91	s	CERAMIC, CHIP 0.1uF 25V
C326	1-163-038-91	s	CERAMIC, CHIP 0.1uF 25V
C327	1-163-038-91	s	CERAMIC, CHIP 0.1uF 25V
C328	1-163-038-91	s	CERAMIC, CHIP 0.1uF 25V
C329	1-126-396-11	s	ELECT, CHIP 47uF 20% 16V
C330	1-163-038-91	s	CERAMIC, CHIP 0.1uF 25V
C351	1-163-038-91	s	CERAMIC, CHIP 0.1uF 25V
C352	1-163-038-91	s	CERAMIC, CHIP 0.1uF 25V
C353	1-163-038-91	s	CERAMIC, CHIP 0.1uF 25V
C354	1-163-038-91	s	CERAMIC, CHIP 0.1uF 25V
C355	1-163-038-91	s	CERAMIC, CHIP 0.1uF 25V
C356	1-163-038-91	s	CERAMIC, CHIP 0.1uF 25V
C357	1-163-038-91	s	CERAMIC, CHIP 0.1uF 25V
C358	1-163-038-91	s	CERAMIC, CHIP 0.1uF 25V
C359	1-163-038-91	s	CERAMIC, CHIP 0.1uF 25V
C360	1-163-038-91	s	CERAMIC, CHIP 0.1uF 25V
C401	1-163-038-91	s	CERAMIC, CHIP 0.1uF 25V
C402	1-163-038-91	s	CERAMIC, CHIP 0.1uF 25V
C403	1-163-038-91	s	CERAMIC, CHIP 0.1uF 25V
C404	1-163-038-91	s	CERAMIC, CHIP 0.1uF 25V
C405	1-163-038-91	s	CERAMIC, CHIP 0.1uF 25V
C406	1-163-038-91	s	CERAMIC, CHIP 0.1uF 25V
C407	1-163-038-91	s	CERAMIC, CHIP 0.1uF 25V
C408	1-163-038-91	s	CERAMIC, CHIP 0.1uF 25V
C409	1-163-038-91	s	CERAMIC, CHIP 0.1uF 25V
C410	1-163-038-91	s	CERAMIC, CHIP 0.1uF 25V
C411	1-163-038-91	s	CERAMIC, CHIP 0.1uF 25V
C412	1-163-038-91	s	CERAMIC, CHIP 0.1uF 25V
C413	1-163-038-91	s	CERAMIC, CHIP 0.1uF 25V
C414	1-163-038-91	s	CERAMIC, CHIP 0.1uF 25V
C415	1-163-038-91	s	CERAMIC, CHIP 0.1uF 25V
C416	1-163-038-91	s	CERAMIC, CHIP 0.1uF 25V
C417	1-163-038-91	s	CERAMIC, CHIP 0.1uF 25V
C418	1-163-038-91	s	CERAMIC, CHIP 0.1uF 25V
C419	1-126-394-11	s	ELECT, CHIP 10uF 20% 16V
C420	1-126-394-11	s	ELECT, CHIP 10uF 20% 16V
C421	1-163-038-91	s	CERAMIC, CHIP 0.1uF 25V
C422	1-163-038-91	s	CERAMIC, CHIP 0.1uF 25V
C451	1-163-038-91	s	CERAMIC, CHIP 0.1uF 25V
C452	1-163-038-91	s	CERAMIC, CHIP 0.1uF 25V
C453	1-163-038-91	s	CERAMIC, CHIP 0.1uF 25V
C454	1-163-038-91	s	CERAMIC, CHIP 0.1uF 25V
C455	1-163-038-91	s	CERAMIC, CHIP 0.1uF 25V
C456	1-163-038-91	s	CERAMIC, CHIP 0.1uF 25V
C457	1-163-227-11	s	CERAMIC, CHIP 10pF 5% 50V
C458	1-163-038-91	s	CERAMIC, CHIP 0.1uF 25V
C459	1-163-038-91	s	CERAMIC, CHIP 0.1uF 25V

(DV-15/15A BOARD; Suffix -13, 14)

Ref. No. or Q'ty	Part No.	SP	Description	
C460	1-126-396-11	s	ELECT, CHIP 47uF 20% 16V	
C461	1-163-038-91	s	CERAMIC, CHIP 0.1uF 25V	
C462	1-163-038-91	s	CERAMIC, CHIP 0.1uF 25V	
C463	1-163-038-91	s	CERAMIC, CHIP 0.1uF 25V	
C501	1-163-038-91	s	CERAMIC, CHIP 0.1uF 25V	
C503	1-163-038-91	s	CERAMIC, CHIP 0.1uF 25V	
C504	1-163-038-91	s	CERAMIC, CHIP 0.1uF 25V	
C505	1-163-038-91	s	CERAMIC, CHIP 0.1uF 25V	
C506	1-163-038-91	s	CERAMIC, CHIP 0.1uF 25V	
C507	1-163-038-91	s	CERAMIC, CHIP 0.1uF 25V	
C508	1-163-038-91	s	CERAMIC, CHIP 0.1uF 25V	
C509	1-126-396-11	s	ELECT, CHIP 47uF 20% 16V	
C510	1-163-038-91	s	CERAMIC, CHIP 0.1uF 25V	
C512	1-163-038-91	s	CERAMIC, CHIP 0.1uF 25V	
C513	1-163-038-91	s	CERAMIC, CHIP 0.1uF 25V	
C514	1-163-038-91	s	CERAMIC, CHIP 0.1uF 25V	
C515	1-163-038-91	s	CERAMIC, CHIP 0.1uF 25V	
C516	1-163-038-91	s	CERAMIC, CHIP 0.1uF 25V	
C517	1-163-038-91	s	CERAMIC, CHIP 0.1uF 25V	
C518	1-163-038-91	s	CERAMIC, CHIP 0.1uF 25V	
C519	1-163-038-91	s	CERAMIC, CHIP 0.1uF 25V	
C551	1-163-038-91	s	CERAMIC, CHIP 0.1uF 25V	
C552	1-126-396-11	s	ELECT, CHIP 47uF 20% 16V	
C553	1-163-038-91	s	CERAMIC, CHIP 0.1uF 25V	
C554	1-163-038-91	s	CERAMIC, CHIP 0.1uF 25V	
C555	1-163-038-91	s	CERAMIC, CHIP 0.1uF 25V	
C556	1-163-038-91	s	CERAMIC, CHIP 0.1uF 25V	
C557	1-163-038-91	s	CERAMIC, CHIP 0.1uF 25V	[For NTSC]
C559	1-163-038-91	s	CERAMIC, CHIP 0.1uF 25V	[For NTSC]
C560	1-163-038-91	s	CERAMIC, CHIP 0.1uF 25V	[For NTSC]
C561	1-163-038-91	s	CERAMIC, CHIP 0.1uF 25V	[For NTSC]
C562	1-163-038-91	s	CERAMIC, CHIP 0.1uF 25V	[For NTSC]
C563	1-163-038-91	s	CERAMIC, CHIP 0.1uF 25V	[For NTSC]
C565	1-163-038-91	s	CERAMIC, CHIP 0.1uF 25V	
C566	1-163-038-91	s	CERAMIC, CHIP 0.1uF 25V	
C567	1-163-038-91	s	CERAMIC, CHIP 0.1uF 25V	
C568	1-163-038-91	s	CERAMIC, CHIP 0.1uF 25V	
C569	1-163-038-91	s	CERAMIC, CHIP 0.1uF 25V	
C570	1-163-038-91	s	CERAMIC, CHIP 0.1uF 25V	
C572	1-163-038-91	s	CERAMIC, CHIP 0.1uF 25V	[For NTSC]
C573	1-163-038-91	s	CERAMIC, CHIP 0.1uF 25V	[For NTSC]
C575	1-163-038-91	s	CERAMIC, CHIP 0.1uF 25V	[For NTSC]
C576	1-163-038-91	s	CERAMIC, CHIP 0.1uF 25V	[For NTSC]
D101	8-719-041-39	s	DIODE KV1470	
D102	8-719-027-95	s	DIODE HSM88WK	
D103	8-719-041-39	s	DIODE KV1470	
D104	8-719-027-95	s	DIODE HSM88WK	
D151	8-719-941-04	s	DIODE SB007-03CP	
D201	8-719-041-39	s	DIODE KV1470	
D251	8-719-941-04	s	DIODE SB007-03CP	
D252	8-719-941-04	s	DIODE SB007-03CP	
D253	8-719-941-04	s	DIODE SB007-03CP	
FL251	1-233-314-11	s	FILTER, NOISE, CHIP	
FL351	1-233-674-21	s	FILTER BLOCK, NOISE, CHIP	
FL352	1-233-674-21	s	FILTER BLOCK, NOISE, CHIP	
FL353	1-239-719-11	s	FILTER, NOISE, CHIP	
FL354	1-239-719-11	s	FILTER, NOISE, CHIP	
FL451	1-233-674-21	s	FILTER BLOCK, NOISE, CHIP	

(DV-15/15A BOARD; Suffix -13, 14)

Ref. No. or Q'ty	Part No.	SP	Description	
FL452	1-233-674-21	s	FILTER BLOCK, NOISE, CHIP	
FL453	1-233-674-21	s	FILTER BLOCK, NOISE, CHIP	
FL501	1-233-314-11	s	FILTER, NOISE, CHIP	
IC11	8-759-157-17	s	IC PQ05SZ1U	
IC101	8-752-375-05	s	IC CXD2191R-T6	
IC102	8-752-375-05	s	IC CXD2191R-T6	
IC103	8-759-186-63	s	IC TC74VHC245F(EL)	
IC151	8-759-186-39	s	IC TC74VHC74F(EL)	
IC152	8-759-186-77	s	IC TC74VHC541F	
IC154	8-759-186-77	s	IC TC74VHC541F	
IC201	8-759-198-63	s	IC S-81230SG-QB-T1	
IC202	8-759-343-09	s	IC CXD2193AR-ER	
IC204	8-759-186-51	s	IC TC74VHC157FS(EL)	
IC205	8-759-349-01	s	IC MC68HC68VBIFB	[For NTSC]
IC206	8-759-081-48	s	IC TC74VHC08F	
IC207	8-759-081-44	s	IC TC74VHC04F	
IC240	8-759-082-61	s	IC TC4W53FU	
IC251	8-759-702-02	s	IC NJM062M	
IC252	8-759-186-39	s	IC TC74VHC74F(EL)	
IC253	8-759-702-02	s	IC NJM062M	
IC256	8-759-447-90	s	IC TLC5733AIPM	
IC257	8-752-376-32	s	IC CXD2310AR-T4	
IC261	8-759-927-18	s	IC SN74HCT541ANS	
IC262	8-759-457-61	s	IC CXD8628BR	
IC264	8-759-927-18	s	IC SN74HCT541ANS	
IC280	8-759-929-26	s	IC TL431CPS	
IC301	8-759-327-31	s	IC CXD2183R	[For PAL]
IC302	8-752-378-68	s	IC CXD3101R	
IC303	8-759-328-28	s	IC ZA4024	
IC304	8-759-426-26	s	IC CXD8608R	
IC305	8-759-328-28	s	IC ZA4024	
IC351	8-759-186-63	s	IC TC74VHC245F(EL)	
IC352	8-759-186-63	s	IC TC74VHC245F(EL)	
IC353	8-759-337-30	s	IC UPD482445LGW-B10-E2	
IC354	8-759-385-90	s	IC CXD2187AR	
IC355	8-759-186-63	s	IC TC74VHC245F(EL)	
IC356	8-759-186-63	s	IC TC74VHC245F(EL)	
IC401	8-759-175-27	s	IC TC74VHC574F	
IC402	8-759-175-27	s	IC TC74VHC574F	
IC403	8-759-175-27	s	IC TC74VHC574F	
IC404	8-759-175-27	s	IC TC74VHC574F	
IC405	8-759-167-20	s	IC UPD42280GU-30	
IC406	8-759-167-20	s	IC UPD42280GU-30	
IC407	8-759-186-77	s	IC TC74VHC541F	
IC408	8-759-186-77	s	IC TC74VHC541F	
IC409	8-759-447-98	s	IC CXD8627AR	
IC410	8-759-196-97	s	IC TC7SH32FU-TE85R	
IC411	8-759-167-20	s	IC UPD42280GU-30	
IC412	8-759-167-20	s	IC UPD42280GU-30	
IC413	8-759-186-77	s	IC TC74VHC541F	
IC414	8-759-186-77	s	IC TC74VHC541F	
IC415	8-759-167-20	s	IC UPD42280GU-30	
IC416	8-759-167-20	s	IC UPD42280GU-30	
IC417	8-759-186-77	s	IC TC74VHC541F	
IC418	8-759-186-77	s	IC TC74VHC541F	
IC451	8-759-337-30	s	IC UPD482445LGW-B10-E2	
IC452	8-759-385-90	s	IC CXD2187AR	
IC453	8-759-186-63	s	IC TC74VHC245F(EL)	

(DV-15/15A BOARD; Suffix -13, 14)

Ref. No. or Q'ty	Part No.	SP	Description	
IC454	8-759-186-63	s	IC TC74VHC245F(EL)	
IC455	8-759-186-63	s	IC TC74VHC245F(EL)	
IC456	8-759-081-42	s	IC TC74VHC00F	
IC501	8-759-328-28	s	IC ZA4024	
IC502	8-759-426-26	s	IC CXD8608R	
IC503	8-759-328-28	s	IC ZA4024	
IC504	8-752-378-68	s	IC CXD3101R	
IC505	8-759-327-31	s	IC CXD2183R	[For PAL]
IC551	8-759-457-61	s	IC CXD8628BR	
IC552	8-759-382-18	s	IC CXD2182AR	[For NTSC]
IC553	8-759-186-39	s	IC TC74VHC74F(EL)	[For NTSC]
IC554	8-759-186-39	s	IC TC74VHC74F(EL)	[For NTSC]
IC557	8-759-081-42	s	IC TC74VHC00F	[For NTSC]
IC558	8-759-186-84	s	IC TC74VHC86F(EL)	[For NTSC]
IC559	8-759-081-48	s	IC TC74VHC08F	
IC560	8-759-186-63	s	IC TC74VHC245F(EL)	
IC562	8-759-186-63	s	IC TC74VHC245F(EL)	
IC563	8-759-186-51	s	IC TC74VHC157FS(EL)	
IC564	8-759-186-51	s	IC TC74VHC157FS(EL)	
L11	1-412-364-11	s	FILTER, NOISE, CHIP	
L101	1-410-381-11	s	INDUCTOR, CHIP 10uH	
L102	1-410-740-31	s	INDUCTOR, CHIP 0.82uH	
L103	1-410-381-11	s	INDUCTOR, CHIP 10uH	
L104	1-410-740-31	s	INDUCTOR, CHIP 0.82uH	
L105	1-410-381-11	s	INDUCTOR, CHIP 10uH	
L151	1-410-381-11	s	INDUCTOR, CHIP 10uH	
L153	1-410-381-11	s	INDUCTOR, CHIP 10uH	
L201	1-410-381-11	s	INDUCTOR, CHIP 10uH	
L202	1-410-378-11	s	INDUCTOR, CHIP 5.6uH	
L203	1-410-381-11	s	INDUCTOR, CHIP 10uH	
L242	1-410-381-11	s	INDUCTOR, CHIP 10uH	
L251	1-410-381-11	s	INDUCTOR, CHIP 10uH	
L252	1-410-381-11	s	INDUCTOR, CHIP 10uH	
L253	1-410-740-31	s	INDUCTOR, CHIP 0.82uH	
L254	1-410-740-31	s	INDUCTOR, CHIP 0.82uH	
L255	1-410-381-11	s	INDUCTOR, CHIP 10uH	
L303	1-410-740-31	s	INDUCTOR, CHIP 0.82uH	
L351	1-410-381-11	s	INDUCTOR, CHIP 10uH	
L352	1-410-740-31	s	INDUCTOR, CHIP 0.82uH	
L353	1-410-381-11	s	INDUCTOR, CHIP 10uH	
L401	1-410-381-11	s	INDUCTOR, CHIP 10uH	
L402	1-410-381-11	s	INDUCTOR, CHIP 10uH	
L451	1-410-740-31	s	INDUCTOR, CHIP 0.82uH	
L452	1-410-740-31	s	INDUCTOR, CHIP 0.82uH	
L502	1-410-740-31	s	INDUCTOR, CHIP 0.82uH	
L551	1-410-740-31	s	INDUCTOR, CHIP 0.82uH	
L553	1-410-381-11	s	INDUCTOR, CHIP 10uH	
PS11	⚠ 1-533-282-21	s	LINK, IC, CHIP 2A	
PS12	⚠ 1-533-282-21	s	LINK, IC, CHIP 2A	
PS13	⚠ 1-576-124-11	s	LINK, IC, CHIP 1A	
PS14	⚠ 1-576-124-11	s	LINK, IC, CHIP 1A	
Q201	1-801-806-11	s	TRANSISTOR DTC144EKA-T146	
Q202	8-729-027-38	s	TRANSISTOR DTA144EKA-T146	
Q241	8-729-117-32	s	TRANSISTOR 2SC4177	[For NTSC]
Q250	8-729-026-55	s	TRANSISTOR FMY4A-T148	
Q251	8-729-140-63	s	TRANSISTOR 2SA1611-M5M6	[For NTSC]
Q252	8-729-117-32	s	TRANSISTOR 2SC4177	[For NTSC]
Q253	8-729-026-55	s	TRANSISTOR FMY4A-T148	

(DV-15/15A BOARD; Suffix -13, 14)

Ref. No. or Q'ty	Part No.	SP	Description	
Q254	8-729-117-32	s	TRANSISTOR 2SC4177	
Q255	8-729-140-63	s	TRANSISTOR 2SA1611-M5M6	
Q256	8-729-117-32	s	TRANSISTOR 2SC4177	
Q258	8-729-140-63	s	TRANSISTOR 2SA1611-M5M6	
Q301	1-801-806-11	s	TRANSISTOR DTC144EKA-T146	
Q551	8-729-027-38	s	TRANSISTOR DTA144EKA-T146	[For NTSC]
Q552	8-729-027-38	s	TRANSISTOR DTA144EKA-T146	[For NTSC]
R101	1-216-089-91	s	METAL, CHIP 47k 5% 1/10W	
R102	1-216-025-91	s	METAL, CHIP 100 5% 1/10W	
R103	1-216-025-91	s	METAL, CHIP 100 5% 1/10W	
R104	1-216-041-00	s	METAL, CHIP 470 5% 1/10W	
R105	1-216-073-00	s	METAL, CHIP 10k 5% 1/10W	
R106	1-216-065-91	s	METAL, CHIP 4.7k 5% 1/10W	
R107	1-216-073-00	s	METAL, CHIP 10k 5% 1/10W	
R108	1-216-017-91	s	METAL, CHIP 47 5% 1/10W	
R109	1-216-121-91	s	METAL, CHIP 1M 5% 1/10W	
R110	1-216-041-00	s	METAL, CHIP 470 5% 1/10W	
R111	1-216-073-00	s	METAL, CHIP 10k 5% 1/10W	
R112	1-216-065-91	s	METAL, CHIP 4.7k 5% 1/10W	
R113	1-216-073-00	s	METAL, CHIP 10k 5% 1/10W	
R114	1-216-017-91	s	METAL, CHIP 47 5% 1/10W	
R115	1-216-025-91	s	METAL, CHIP 100 5% 1/10W	
R116	1-216-025-91	s	METAL, CHIP 100 5% 1/10W	
R151	1-216-025-91	s	METAL, CHIP 100 5% 1/10W	
R152	1-216-025-91	s	METAL, CHIP 100 5% 1/10W	
R153	1-216-025-91	s	METAL, CHIP 100 5% 1/10W	
R154	1-216-073-00	s	METAL, CHIP 10k 5% 1/10W	
R161	1-216-025-91	s	METAL, CHIP 100 5% 1/10W	
R162	1-216-025-91	s	METAL, CHIP 100 5% 1/10W	
R163	1-216-025-91	s	METAL, CHIP 100 5% 1/10W	
R166	1-216-025-91	s	METAL, CHIP 100 5% 1/10W	
R201	1-216-025-91	s	METAL, CHIP 100 5% 1/10W	
R202	1-216-025-91	s	METAL, CHIP 100 5% 1/10W	
R203	1-216-025-91	s	METAL, CHIP 100 5% 1/10W	
R204	1-216-089-91	s	METAL, CHIP 47k 5% 1/10W	
R205	1-216-295-91	s	RES, CHIP 0	
R206	1-216-295-91	s	RES, CHIP 0	
R207	1-216-057-00	s	METAL, CHIP 2.2k 5% 1/10W	
R208	1-216-085-00	s	METAL, CHIP 33k 5% 1/10W	
R209	1-216-085-00	s	METAL, CHIP 33k 5% 1/10W	
R210	1-216-025-91	s	METAL, CHIP 100 5% 1/10W	
R211	1-216-295-91	s	RES, CHIP 0	
R212	1-216-085-00	s	METAL, CHIP 33k 5% 1/10W	
R213	1-216-085-00	s	METAL, CHIP 33k 5% 1/10W	
R214	1-216-295-91	s	RES, CHIP 0	
R215	1-216-295-91	s	RES, CHIP 0	
R216	1-216-017-91	s	METAL, CHIP 47 5% 1/10W	
R217	1-216-295-91	s	RES, CHIP 0	
R218	1-216-295-91	s	RES, CHIP 0	
R220	1-216-085-00	s	METAL, CHIP 33k 5% 1/10W	
R221	1-216-085-00	s	METAL, CHIP 33k 5% 1/10W	
R222	1-216-295-91	s	RES, CHIP 0	
R223	1-216-049-91	s	METAL, CHIP 1k 5% 1/10W	
R224	1-216-073-00	s	METAL, CHIP 10k 5% 1/10W	
R225	1-216-295-91	s	RES, CHIP 0	
R226	1-216-073-00	s	METAL, CHIP 10k 5% 1/10W	
R227	1-216-687-11	s	METAL, CHIP 33k 0.5% 1/10W	
R231	1-216-295-91	s	RES, CHIP 0	[For NTSC]

(DV-15/15A BOARD; Suffix -13, 14)

Ref. No. or Q'ty	Part No.	SP	Description
R233	1-216-073-00	s	METAL, CHIP 10k 5% 1/10W
R234	1-216-049-91	s	METAL, CHIP 1k 5% 1/10W
R241	1-216-037-00	s	METAL, CHIP 330 5% 1/10W [For NTSC]
R244	1-216-113-00	s	METAL, CHIP 470k 5% 1/10W[For NTSC]
R245	1-216-025-91	s	METAL, CHIP 100 5% 1/10W
R246	1-216-049-91	s	METAL, CHIP 1k 5% 1/10W
R250	1-216-022-00	s	METAL, CHIP 75 5% 1/10W
R251	1-216-295-91	s	RES, CHIP 0
R252	1-216-295-91	s	RES, CHIP 0
R253	1-216-657-11	s	METAL, CHIP 1.8k 0.5% 1/10W [For NTSC]
R254	1-216-659-11	s	METAL, CHIP 2.2k 0.5% 1/10W [For NTSC]
R255	1-216-057-00	s	METAL, CHIP 2.2k 5% 1/10W
R256	1-216-057-00	s	METAL, CHIP 2.2k 5% 1/10W
R257	1-216-001-00	s	METAL, CHIP 10 5% 1/10W
R258	1-216-097-91	s	METAL, CHIP 100k 5% 1/10W
R259	1-216-022-00	s	METAL, CHIP 75 5% 1/10W
R260	1-216-041-00	s	METAL, CHIP 470 5% 1/10W [For NTSC]
R261	1-216-057-00	s	METAL, CHIP 2.2k 5% 1/10W
R262	1-216-295-91	s	RES, CHIP 0
R263	1-216-081-00	s	METAL, CHIP 22k 5% 1/10W [For NTSC]
R264	1-216-025-91	s	METAL, CHIP 100 5% 1/10W
R265	1-216-025-91	s	METAL, CHIP 100 5% 1/10W
R266	1-216-057-00	s	METAL, CHIP 2.2k 5% 1/10W
R267	1-216-001-00	s	METAL, CHIP 10 5% 1/10W
R268	1-216-025-91	s	METAL, CHIP 100 5% 1/10W
R269	1-216-017-91	s	METAL, CHIP 47 5% 1/10W
R270	1-216-073-00	s	METAL, CHIP 10k 5% 1/10W
R271	1-216-037-00	s	METAL, CHIP 330 5% 1/10W
R272	1-216-017-91	s	METAL, CHIP 47 5% 1/10W
R273	1-216-017-91	s	METAL, CHIP 47 5% 1/10W
R274	1-216-037-00	s	METAL, CHIP 330 5% 1/10W
R281	1-216-037-00	s	METAL, CHIP 330 5% 1/10W
R284	1-216-047-91	s	METAL, CHIP 820 5% 1/10W
R289	1-216-677-11	s	METAL, CHIP 12k 0.5% 1/10W
R290	1-216-677-11	s	METAL, CHIP 12k 0.5% 1/10W
R292	1-216-025-91	s	METAL, CHIP 100 5% 1/10W
R293	1-216-677-11	s	METAL, CHIP 12k 0.5% 1/10W
R294	1-216-682-11	s	METAL, CHIP 20k 0.5% 1/10W
R295	1-216-047-91	s	METAL, CHIP 820 5% 1/10W
R296	1-216-025-91	s	METAL, CHIP 100 5% 1/10W
R297	1-216-025-91	s	METAL, CHIP 100 5% 1/10W
R298	1-216-025-91	s	METAL, CHIP 100 5% 1/10W
R311	1-216-025-91	s	METAL, CHIP 100 5% 1/10W [For NTSC]
R312	1-216-295-91	s	RES, CHIP 0 [For NTSC]
R351	1-216-025-91	s	METAL, CHIP 100 5% 1/10W
R354	1-216-089-91	s	METAL, CHIP 47k 5% 1/10W
R356	1-216-089-91	s	METAL, CHIP 47k 5% 1/10W
R357	1-216-025-91	s	METAL, CHIP 100 5% 1/10W
R358	1-216-025-91	s	METAL, CHIP 100 5% 1/10W
R359	1-216-025-91	s	METAL, CHIP 100 5% 1/10W
R364	1-216-025-91	s	METAL, CHIP 100 5% 1/10W
R365	1-216-025-91	s	METAL, CHIP 100 5% 1/10W
R366	1-216-025-91	s	METAL, CHIP 100 5% 1/10W
R401	1-216-295-91	s	RES, CHIP 0
R403	1-216-295-91	s	RES, CHIP 0

(DV-15/15A BOARD; Suffix -13, 14)

Ref. No. or Q'ty	Part No.	SP	Description
R408	1-216-073-00	s	METAL, CHIP 10k 5% 1/10W
R451	1-216-089-91	s	METAL, CHIP 47k 5% 1/10W
R452	1-216-089-91	s	METAL, CHIP 47k 5% 1/10W
R453	1-216-295-91	s	RES, CHIP 0
R454	1-216-073-00	s	METAL, CHIP 10k 5% 1/10W
R461	1-216-025-91	s	METAL, CHIP 100 5% 1/10W
R462	1-216-025-91	s	METAL, CHIP 100 5% 1/10W
R463	1-216-025-91	s	METAL, CHIP 100 5% 1/10W
R512	1-216-025-91	s	METAL, CHIP 100 5% 1/10W
R556	1-216-295-91	s	RES, CHIP 0 [For PAL]
R557	1-216-295-91	s	RES, CHIP 0 [For PAL]
R558	1-216-295-91	s	RES, CHIP 0 [For PAL]
R560	1-216-295-91	s	RES, CHIP 0 [For PAL]
R561	1-216-295-91	s	RES, CHIP 0 [For PAL]
R575	1-216-073-00	s	METAL, CHIP 10k 5% 1/10W [For NTSC]
R576	1-216-073-00	s	METAL, CHIP 10k 5% 1/10W [For NTSC]
RB101	1-239-308-11	s	RESISTOR BLOCK, CHIP 47k x 8
RB102	1-239-998-11	s	RESISTOR BLOCK, CHIP 100 x 4
RB103	1-239-998-11	s	RESISTOR BLOCK, CHIP 100 x 4
RB151	1-239-998-11	s	RESISTOR BLOCK, CHIP 100 x 4
RB152	1-239-998-11	s	RESISTOR BLOCK, CHIP 100 x 4
RB153	1-239-998-11	s	RESISTOR BLOCK, CHIP 100 x 4
RB201	1-239-998-11	s	RESISTOR BLOCK, CHIP 100 x 4
RB202	1-239-998-11	s	RESISTOR BLOCK, CHIP 100 x 4
RB203	1-239-998-11	s	RESISTOR BLOCK, CHIP 100 x 4
RB204	1-239-308-11	s	RESISTOR BLOCK, CHIP 47k x 8
RB251	1-239-998-11	s	RESISTOR BLOCK, CHIP 100 x 4
RB301	1-239-998-11	s	RESISTOR BLOCK, CHIP 100 x 4 [For NTSC]
RB302	1-239-998-11	s	RESISTOR BLOCK, CHIP 100 x 4 [For NTSC]
RB354	1-239-998-11	s	RESISTOR BLOCK, CHIP 100 x 4
RB355	1-239-998-11	s	RESISTOR BLOCK, CHIP 100 x 4
RB356	1-239-998-11	s	RESISTOR BLOCK, CHIP 100 x 4
RB451	1-239-998-11	s	RESISTOR BLOCK, CHIP 100 x 4
RB452	1-239-998-11	s	RESISTOR BLOCK, CHIP 100 x 4
RB453	1-239-998-11	s	RESISTOR BLOCK, CHIP 100 x 4
RB454	1-239-998-11	s	RESISTOR BLOCK, CHIP 100 x 4
RB455	1-239-308-11	s	RESISTOR BLOCK, CHIP 47k x 8
RB456	1-239-998-11	s	RESISTOR BLOCK, CHIP 100 x 4
RB457	1-239-998-11	s	RESISTOR BLOCK, CHIP 100 x 4
RB458	1-239-998-11	s	RESISTOR BLOCK, CHIP 100 x 4
RB501	1-239-998-11	s	RESISTOR BLOCK, CHIP 100 x 4 [For NTSC]
RB502	1-239-998-11	s	RESISTOR BLOCK, CHIP 100 x 4 [For NTSC]
RB551	1-239-998-11	s	RESISTOR BLOCK, CHIP 100 x 4
RB552	1-239-998-11	s	RESISTOR BLOCK, CHIP 100 x 4
RB553	1-239-998-11	s	RESISTOR BLOCK, CHIP 100 x 4
RB554	1-239-998-11	s	RESISTOR BLOCK, CHIP 100 x 4
RB555	1-239-998-11	s	RESISTOR BLOCK, CHIP 100 x 4
RB556	1-239-998-11	s	RESISTOR BLOCK, CHIP 100 x 4

(DV-15/15A BOARD; Suffix -13, 14)

Ref. No. or Q'ty	Part No.	SP	Description
RV201	1-241-264-11	s	RES, ADJ, METAL 10k
X101	1-760-654-21	s	CRYSTAL, CHIP 13.50MHz
X241	1-579-466-11	s	CRYSTAL, CHIP 3.579545MHz [For NTSC]

DV-15/15A BOARD; Suffix -11, 12

This list corresponds to the board suffix numbers -11 and -12.

Ref. No. or Q'ty	Part No.	SP	Description
1pc	A-8315-282-A	s	MOUNTED CIRCUIT BOARD, DV-15 [For NTSC]
1pc	A-8315-301-A	s	MOUNTED CIRCUIT BOARD, DV-15A [For PAL]
1pc	7-621-759-45	s	+PSW, 2.6x6
1pc	3-179-084-01	s	LEVER (R), PRINTED CIRCUIT BOARD
1pc	3-179-085-01	s	LEVER (L), PRINTED CIRCUIT BOARD
C11	1-163-038-91	s	CERAMIC, CHIP 0.1uF 25V
C12	1-163-038-91	s	CERAMIC, CHIP 0.1uF 25V
C13	1-163-038-91	s	CERAMIC, CHIP 0.1uF 25V
C14	1-126-394-11	s	ELECT, CHIP 10uF 20% 16V
C15	1-126-396-11	s	ELECT, CHIP 47uF 20% 16V
C16	1-163-038-91	s	CERAMIC, CHIP 0.1uF 25V
C101	1-163-222-11	s	CERAMIC, CHIP 5pF 50V
C102	1-163-222-11	s	CERAMIC, CHIP 5pF 50V
C103	1-163-038-91	s	CERAMIC, CHIP 0.1uF 25V
C104	1-126-394-11	s	ELECT, CHIP 10uF 20% 16V
C105	1-163-038-91	s	CERAMIC, CHIP 0.1uF 25V
C106	1-163-038-91	s	CERAMIC, CHIP 0.1uF 25V
C107	1-163-038-91	s	CERAMIC, CHIP 0.1uF 25V
C108	1-163-275-11	s	CERAMIC, CHIP 0.001uF 5% 50V
C109	1-163-809-11	s	CERAMIC, CHIP 0.047uF 10% 25V
C110	1-163-275-11	s	CERAMIC, CHIP 0.001uF 5% 50V
C111	1-163-275-11	s	CERAMIC, CHIP 0.001uF 5% 50V
C112	1-135-179-21	s	TANTALUM, CHIP 2.2uF 10% 16V
C113	1-163-251-11	s	CERAMIC, CHIP 100pF 5% 50V
C114	1-163-038-91	s	CERAMIC, CHIP 0.1uF 25V
C115	1-126-394-11	s	ELECT, CHIP 10uF 20% 16V
C116	1-163-038-91	s	CERAMIC, CHIP 0.1uF 25V
C117	1-163-038-91	s	CERAMIC, CHIP 0.1uF 25V
C118	1-163-038-91	s	CERAMIC, CHIP 0.1uF 25V
C119	1-163-275-11	s	CERAMIC, CHIP 0.001uF 5% 50V
C120	1-163-809-11	s	CERAMIC, CHIP 0.047uF 10% 25V
C121	1-163-275-11	s	CERAMIC, CHIP 0.001uF 5% 50V
C122	1-163-275-11	s	CERAMIC, CHIP 0.001uF 5% 50V
C123	1-135-179-21	s	TANTALUM, CHIP 2.2uF 10% 16V
C124	1-163-038-91	s	CERAMIC, CHIP 0.1uF 25V
C151	1-163-038-91	s	CERAMIC, CHIP 0.1uF 25V
C152	1-163-038-91	s	CERAMIC, CHIP 0.1uF 25V
C153	1-163-038-91	s	CERAMIC, CHIP 0.1uF 25V
C154	1-163-038-91	s	CERAMIC, CHIP 0.1uF 25V
C155	1-163-038-91	s	CERAMIC, CHIP 0.1uF 25V
C156	1-163-038-91	s	CERAMIC, CHIP 0.1uF 25V
C201	1-126-394-11	s	ELECT, CHIP 10uF 20% 16V
C202	1-163-038-91	s	CERAMIC, CHIP 0.1uF 25V
C203	1-163-038-91	s	CERAMIC, CHIP 0.1uF 25V
C204	1-126-394-11	s	ELECT, CHIP 10uF 20% 16V
C205	1-126-401-11	s	ELECT, CHIP 1uF 20% 50V
C206	1-163-038-91	s	CERAMIC, CHIP 0.1uF 25V
C208	1-164-182-11	s	CERAMIC, CHIP 3300pF 10% 100V
C210	1-164-182-11	s	CERAMIC, CHIP 3300pF 10% 100V
C211	1-163-133-00	s	CERAMIC, CHIP 470pF 5% 50V

(DV-15/15A BOARD; Suffix -11, 12)

Ref. No. or Q'ty	Part No.	SP	Description	
C212	1-104-912-11	s	TANTALUM, CHIP 3.3uF 20% 16V	
C213	1-163-089-00	s	CERAMIC, CHIP 6pF 50V	
C214	1-163-251-11	s	CERAMIC, CHIP 100pF 5% 50V	
C215	1-163-231-11	s	CERAMIC, CHIP 15pF 5% 50V	
C216	1-163-038-91	s	CERAMIC, CHIP 0.1uF 25V	
C217	1-163-251-11	s	CERAMIC, CHIP 100pF 5% 50V	
C218	1-163-038-91	s	CERAMIC, CHIP 0.1uF 25V	
C240	1-163-038-91	s	CERAMIC, CHIP 0.1uF 25V	
C241	1-163-038-91	s	CERAMIC, CHIP 0.1uF 25V	[For NTSC]
C242	1-163-259-91	s	CERAMIC, CHIP 220pF 5% 50V	[For NTSC]
C243	1-126-394-11	s	ELECT, CHIP 10uF 20% 16V	[For NTSC]
C244	1-163-038-91	s	CERAMIC, CHIP 0.1uF 25V	[For NTSC]
C246	1-163-038-91	s	CERAMIC, CHIP 0.1uF 25V	[For NTSC]
C247	1-163-038-91	s	CERAMIC, CHIP 0.1uF 25V	[For NTSC]
C248	1-163-227-11	s	CERAMIC, CHIP 10pF 5% 50V	[For NTSC]
C249	1-163-227-11	s	CERAMIC, CHIP 10pF 5% 50V	[For NTSC]
C250	1-135-190-21	s	TANTALUM, CHIP 0.1uF 10% 20V	[For NTSC]
C251	1-126-396-11	s	ELECT, CHIP 47uF 20% 16V	
C252	1-126-396-11	s	ELECT, CHIP 47uF 20% 16V	
C253	1-163-038-91	s	CERAMIC, CHIP 0.1uF 25V	
C254	1-163-038-91	s	CERAMIC, CHIP 0.1uF 25V	
C255	1-126-394-11	s	ELECT, CHIP 10uF 20% 16V	[For NTSC]
C256	1-104-851-11	s	TANTALUM, CHIP 10uF 20% 10V	
C257	1-104-851-11	s	TANTALUM, CHIP 10uF 20% 10V	
C258	1-104-851-11	s	TANTALUM, CHIP 10uF 20% 10V	
C259	1-104-851-11	s	TANTALUM, CHIP 10uF 20% 10V	
C261	1-163-227-11	s	CERAMIC, CHIP 10pF 5% 50V	
C263	1-163-227-11	s	CERAMIC, CHIP 10pF 5% 50V	
C269	1-163-038-91	s	CERAMIC, CHIP 0.1uF 25V	
C270	1-135-145-11	s	TANTALUM, CHIP 0.47uF 10% 35V	
C272	1-126-396-11	s	ELECT, CHIP 47uF 20% 16V	
C273	1-163-038-91	s	CERAMIC, CHIP 0.1uF 25V	
C275	1-163-038-91	s	CERAMIC, CHIP 0.1uF 25V	
C276	1-126-396-11	s	ELECT, CHIP 47uF 20% 16V	
C277	1-163-038-91	s	CERAMIC, CHIP 0.1uF 25V	
C278	1-163-038-91	s	CERAMIC, CHIP 0.1uF 25V	
C279	1-163-038-91	s	CERAMIC, CHIP 0.1uF 25V	
C280	1-126-396-11	s	ELECT, CHIP 47uF 20% 16V	
C281	1-163-038-91	s	CERAMIC, CHIP 0.1uF 25V	
C282	1-163-038-91	s	CERAMIC, CHIP 0.1uF 25V	
C283	1-163-251-11	s	CERAMIC, CHIP 100pF 5% 50V	
C284	1-163-038-91	s	CERAMIC, CHIP 0.1uF 25V	
C285	1-163-227-11	s	CERAMIC, CHIP 10pF 5% 50V	
C286	1-163-038-91	s	CERAMIC, CHIP 0.1uF 25V	
C287	1-163-038-91	s	CERAMIC, CHIP 0.1uF 25V	
C288	1-126-396-11	s	ELECT, CHIP 47uF 20% 16V	
C289	1-163-038-91	s	CERAMIC, CHIP 0.1uF 25V	
C290	1-163-038-91	s	CERAMIC, CHIP 0.1uF 25V	
C291	1-163-038-91	s	CERAMIC, CHIP 0.1uF 25V	
C292	1-163-038-91	s	CERAMIC, CHIP 0.1uF 25V	
C293	1-163-038-91	s	CERAMIC, CHIP 0.1uF 25V	
C294	1-135-145-11	s	TANTALUM, CHIP 0.47uF 10% 35V	
C295	1-163-038-91	s	CERAMIC, CHIP 0.1uF 25V	
C296	1-163-038-91	s	CERAMIC, CHIP 0.1uF 25V	
C297	1-163-038-91	s	CERAMIC, CHIP 0.1uF 25V	

(DV-15/15A BOARD; Suffix -11, 12)

Ref. No. or Q'ty	Part No.	SP	Description
C298	1-163-038-91	s	CERAMIC, CHIP 0.1uF 25V
C299	1-163-038-91	s	CERAMIC, CHIP 0.1uF 25V
C300	1-163-038-91	s	CERAMIC, CHIP 0.1uF 25V
C301	1-126-394-11	s	ELECT, CHIP 10uF 20% 16V
C302	1-163-038-91	s	CERAMIC, CHIP 0.1uF 25V
C303	1-163-038-91	s	CERAMIC, CHIP 0.1uF 25V
C304	1-163-038-91	s	CERAMIC, CHIP 0.1uF 25V
C311	1-163-038-91	s	CERAMIC, CHIP 0.1uF 25V
C312	1-163-038-91	s	CERAMIC, CHIP 0.1uF 25V
C313	1-163-038-91	s	CERAMIC, CHIP 0.1uF 25V
C315	1-163-038-91	s	CERAMIC, CHIP 0.1uF 25V
C316	1-163-038-91	s	CERAMIC, CHIP 0.1uF 25V
C317	1-163-038-91	s	CERAMIC, CHIP 0.1uF 25V
C319	1-163-038-91	s	CERAMIC, CHIP 0.1uF 25V
C320	1-163-038-91	s	CERAMIC, CHIP 0.1uF 25V
C321	1-163-038-91	s	CERAMIC, CHIP 0.1uF 25V
C323	1-163-038-91	s	CERAMIC, CHIP 0.1uF 25V
C324	1-163-038-91	s	CERAMIC, CHIP 0.1uF 25V
C325	1-163-038-91	s	CERAMIC, CHIP 0.1uF 25V
C326	1-163-038-91	s	CERAMIC, CHIP 0.1uF 25V
C327	1-163-038-91	s	CERAMIC, CHIP 0.1uF 25V
C328	1-163-038-91	s	CERAMIC, CHIP 0.1uF 25V
C329	1-126-396-11	s	ELECT, CHIP 47uF 20% 16V
C330	1-163-038-91	s	CERAMIC, CHIP 0.1uF 25V
C351	1-163-038-91	s	CERAMIC, CHIP 0.1uF 25V
C352	1-163-038-91	s	CERAMIC, CHIP 0.1uF 25V
C353	1-163-038-91	s	CERAMIC, CHIP 0.1uF 25V
C354	1-163-038-91	s	CERAMIC, CHIP 0.1uF 25V
C355	1-163-038-91	s	CERAMIC, CHIP 0.1uF 25V
C356	1-163-038-91	s	CERAMIC, CHIP 0.1uF 25V
C357	1-163-038-91	s	CERAMIC, CHIP 0.1uF 25V
C358	1-163-038-91	s	CERAMIC, CHIP 0.1uF 25V
C359	1-163-038-91	s	CERAMIC, CHIP 0.1uF 25V
C360	1-163-038-91	s	CERAMIC, CHIP 0.1uF 25V
C401	1-163-038-91	s	CERAMIC, CHIP 0.1uF 25V
C402	1-163-038-91	s	CERAMIC, CHIP 0.1uF 25V
C403	1-163-038-91	s	CERAMIC, CHIP 0.1uF 25V
C404	1-163-038-91	s	CERAMIC, CHIP 0.1uF 25V
C405	1-163-038-91	s	CERAMIC, CHIP 0.1uF 25V
C406	1-163-038-91	s	CERAMIC, CHIP 0.1uF 25V
C407	1-163-038-91	s	CERAMIC, CHIP 0.1uF 25V
C408	1-163-038-91	s	CERAMIC, CHIP 0.1uF 25V
C409	1-163-038-91	s	CERAMIC, CHIP 0.1uF 25V
C410	1-163-038-91	s	CERAMIC, CHIP 0.1uF 25V
C411	1-163-038-91	s	CERAMIC, CHIP 0.1uF 25V
C412	1-163-038-91	s	CERAMIC, CHIP 0.1uF 25V
C413	1-163-038-91	s	CERAMIC, CHIP 0.1uF 25V
C414	1-163-038-91	s	CERAMIC, CHIP 0.1uF 25V
C415	1-163-038-91	s	CERAMIC, CHIP 0.1uF 25V
C416	1-163-038-91	s	CERAMIC, CHIP 0.1uF 25V
C417	1-163-038-91	s	CERAMIC, CHIP 0.1uF 25V
C418	1-163-038-91	s	CERAMIC, CHIP 0.1uF 25V
C419	1-126-394-11	s	ELECT, CHIP 10uF 20% 16V
C420	1-126-394-11	s	ELECT, CHIP 10uF 20% 16V
C421	1-163-038-91	s	CERAMIC, CHIP 0.1uF 25V
C422	1-163-038-91	s	CERAMIC, CHIP 0.1uF 25V
C451	1-163-038-91	s	CERAMIC, CHIP 0.1uF 25V
C452	1-163-038-91	s	CERAMIC, CHIP 0.1uF 25V
C453	1-163-038-91	s	CERAMIC, CHIP 0.1uF 25V

(DV-15/15A BOARD; Suffix -11, 12)

Ref. No. or Q'ty	Part No.	SP	Description	
C454	1-163-038-91	s	CERAMIC, CHIP 0.1uF 25V	
C455	1-163-038-91	s	CERAMIC, CHIP 0.1uF 25V	
C456	1-163-038-91	s	CERAMIC, CHIP 0.1uF 25V	
C457	1-163-227-11	s	CERAMIC, CHIP 10pF 5% 50V	
C458	1-163-038-91	s	CERAMIC, CHIP 0.1uF 25V	
C459	1-163-038-91	s	CERAMIC, CHIP 0.1uF 25V	
C460	1-126-396-11	s	ELECT, CHIP 47uF 20% 16V	
C461	1-163-038-91	s	CERAMIC, CHIP 0.1uF 25V	
C462	1-163-038-91	s	CERAMIC, CHIP 0.1uF 25V	
C463	1-163-038-91	s	CERAMIC, CHIP 0.1uF 25V	
C501	1-163-038-91	s	CERAMIC, CHIP 0.1uF 25V	
C503	1-163-038-91	s	CERAMIC, CHIP 0.1uF 25V	
C504	1-163-038-91	s	CERAMIC, CHIP 0.1uF 25V	
C505	1-163-038-91	s	CERAMIC, CHIP 0.1uF 25V	
C506	1-163-038-91	s	CERAMIC, CHIP 0.1uF 25V	
C507	1-163-038-91	s	CERAMIC, CHIP 0.1uF 25V	
C508	1-163-038-91	s	CERAMIC, CHIP 0.1uF 25V	
C509	1-126-396-11	s	ELECT, CHIP 47uF 20% 16V	
C510	1-163-038-91	s	CERAMIC, CHIP 0.1uF 25V	
C512	1-163-038-91	s	CERAMIC, CHIP 0.1uF 25V	
C513	1-163-038-91	s	CERAMIC, CHIP 0.1uF 25V	
C514	1-163-038-91	s	CERAMIC, CHIP 0.1uF 25V	
C515	1-163-038-91	s	CERAMIC, CHIP 0.1uF 25V	
C516	1-163-038-91	s	CERAMIC, CHIP 0.1uF 25V	
C517	1-163-038-91	s	CERAMIC, CHIP 0.1uF 25V	
C518	1-163-038-91	s	CERAMIC, CHIP 0.1uF 25V	
C519	1-163-038-91	s	CERAMIC, CHIP 0.1uF 25V	
C551	1-163-038-91	s	CERAMIC, CHIP 0.1uF 25V	
C552	1-126-396-11	s	ELECT, CHIP 47uF 20% 16V	
C553	1-163-038-91	s	CERAMIC, CHIP 0.1uF 25V	
C554	1-163-038-91	s	CERAMIC, CHIP 0.1uF 25V	
C555	1-163-038-91	s	CERAMIC, CHIP 0.1uF 25V	
C556	1-163-038-91	s	CERAMIC, CHIP 0.1uF 25V	
C557	1-163-038-91	s	CERAMIC, CHIP 0.1uF 25V	[For NTSC]
C559	1-163-038-91	s	CERAMIC, CHIP 0.1uF 25V	[For NTSC]
C560	1-163-038-91	s	CERAMIC, CHIP 0.1uF 25V	[For NTSC]
C561	1-163-038-91	s	CERAMIC, CHIP 0.1uF 25V	[For NTSC]
C562	1-163-038-91	s	CERAMIC, CHIP 0.1uF 25V	[For NTSC]
C563	1-163-038-91	s	CERAMIC, CHIP 0.1uF 25V	[For NTSC]
C565	1-163-038-91	s	CERAMIC, CHIP 0.1uF 25V	
C566	1-163-038-91	s	CERAMIC, CHIP 0.1uF 25V	
C567	1-163-038-91	s	CERAMIC, CHIP 0.1uF 25V	
C568	1-163-038-91	s	CERAMIC, CHIP 0.1uF 25V	
C569	1-163-038-91	s	CERAMIC, CHIP 0.1uF 25V	
C570	1-163-038-91	s	CERAMIC, CHIP 0.1uF 25V	
C571	1-163-038-91	s	CERAMIC, CHIP 0.1uF 25V	
C572	1-163-038-91	s	CERAMIC, CHIP 0.1uF 25V	
C573	1-163-038-91	s	CERAMIC, CHIP 0.1uF 25V	
C575	1-163-038-91	s	CERAMIC, CHIP 0.1uF 25V	
C576	1-163-038-91	s	CERAMIC, CHIP 0.1uF 25V	
D101	8-719-041-39	s	DIODE KV1470	
D102	8-719-027-95	s	DIODE HSM88WK	
D103	8-719-041-39	s	DIODE KV1470	
D104	8-719-027-95	s	DIODE HSM88WK	
D151	8-719-941-04	s	DIODE SB007-03CP	
D201	8-719-041-39	s	DIODE KV1470	
D251	8-719-941-04	s	DIODE SB007-03CP	
D252	8-719-941-04	s	DIODE SB007-03CP	

(DV-15/15A BOARD; Suffix -11, 12)

Ref. No. or Q'ty	Part No.	SP	Description	
FB351	1-233-674-21	s	FILTER BLOCK, NOISE, CHIP	
FB352	1-233-674-21	s	FILTER BLOCK, NOISE, CHIP	
FL451	1-233-674-21	s	FILTER BLOCK, NOISE, CHIP	
FL452	1-233-674-21	s	FILTER BLOCK, NOISE, CHIP	
FL501	1-233-314-11	s	FILTER, NOISE CHIP	
IC11	8-759-157-17	s	IC PQ05SZ1U	
IC101	8-752-375-05	s	IC CXD2191R-T6	
IC102	8-752-375-05	s	IC CXD2191R-T6	
IC103	8-759-186-63	s	IC TC74VHC245F(EL)	
IC151	8-759-186-39	s	IC TC74VHC74F(EL)	
IC152	8-759-186-63	s	IC TC74VHC245F(EL)	
IC154	8-759-186-77	s	IC TC74VHC541F	
IC201	8-759-198-63	s	IC S-81230SG-QB-T1	
IC202	8-759-343-09	s	IC CXD2193AR-ER	
IC203	8-759-081-42	s	IC TC74VHC00F	
IC204	8-759-186-51	s	IC TC74VHC157F	
IC205	8-759-349-01	s	IC MC68HC68VBIFB	[For NTSC]
IC240	8-759-082-61	s	IC TC4W53FU	
IC251	8-759-702-02	s	IC NJM062M	
IC252	8-759-186-39	s	IC TC74VHC74F(EL)	
IC255	8-759-929-26	s	IC TL431CPS	
IC256	8-759-447-90	s	IC TLC5733AIPM	
IC257	8-752-376-32	s	IC CXD2310AR-T4	
IC258	8-759-186-63	s	IC TC74VHC245F(EL)	
IC259	8-759-186-63	s	IC TC74VHC245F(EL)	
IC260	8-759-186-69	s	IC TC74VHC367F(EL)	
IC261	8-759-927-18	s	IC SN74HCT541NS	
IC262	8-759-457-61	s	IC CXD8628BR	
IC263	8-759-081-44	s	IC TC74VHC04F	
IC264	8-759-927-18	s	IC SN74HCT541NS	
IC280	8-759-929-26	s	IC TL431CPS	
IC301	8-759-327-31	s	IC CXD2183R	[For PAL]
IC302	8-752-378-68	s	IC CXD3101R	
IC303	8-759-328-28	s	IC ZA4024	
IC304	8-759-426-26	s	IC CXD8608R	
IC305	8-759-328-28	s	IC ZA4024	
IC351	8-759-186-63	s	IC TC74VHC245F(EL)	
IC352	8-759-186-63	s	IC TC74VHC245F(EL)	
IC353	8-759-337-30	s	IC UPD482445LGW-B10-E2	
IC354	8-759-385-90	s	IC CXD2187AR	
IC355	8-759-186-63	s	IC TC74VHC245F(EL)	
IC356	8-759-186-63	s	IC TC74VHC245F(EL)	
IC401	8-759-175-27	s	IC TC74VHC574F	
IC402	8-759-175-27	s	IC TC74VHC574F	
IC403	8-759-175-27	s	IC TC74VHC574F	
IC404	8-759-175-27	s	IC TC74VHC574F	
IC405	8-759-167-20	s	IC UPD42280GU-30	
IC406	8-759-167-20	s	IC UPD42280GU-30	
IC407	8-759-186-77	s	IC TC74VHC541F	
IC408	8-759-186-77	s	IC TC74VHC541F	
IC409	8-759-447-98	s	IC CXD8627AR	
IC410	8-759-196-97	s	IC TC7SH32FU-TE85R	
IC411	8-759-167-20	s	IC UPD42280GU-30	
IC412	8-759-167-20	s	IC UPD42280GU-30	
IC413	8-759-186-77	s	IC TC74VHC541F	
IC414	8-759-186-77	s	IC TC74VHC541F	
IC415	8-759-167-20	s	IC UPD42280GU-30	
IC416	8-759-167-20	s	IC UPD42280GU-30	

(DV-15/15A BOARD; Suffix -11, 12)

Ref. No. or Q'ty	Part No.	SP	Description	
IC417	8-759-186-77	s	IC TC74VHC541F	
IC418	8-759-186-77	s	IC TC74VHC541F	
IC451	8-759-337-30	s	IC UPD482445LGW-B10-E2	
IC452	8-759-385-90	s	IC CXD2187AR	
IC453	8-759-186-63	s	IC TC74VHC245F(EL)	
IC454	8-759-186-63	s	IC TC74VHC245F(EL)	
IC455	8-759-186-63	s	IC TC74VHC245F(EL)	
IC456	8-759-081-42	s	IC TC74VHC00F	
IC501	8-759-328-28	s	IC ZA4024	
IC502	8-759-426-26	s	IC CXD8608R	
IC503	8-759-328-28	s	IC ZA4024	
IC504	8-752-378-68	s	IC CXD3101R	
IC505	8-759-327-31	s	IC CXD2183R	[For PAL]
IC551	8-759-457-61	s	IC CXD8628BR	
IC552	8-759-382-18	s	IC CXD2182AR	[For NTSC]
IC553	8-759-186-39	s	IC TC74VHC74F(EL)	[For NTSC]
IC554	8-759-186-39	s	IC TC74VHC74F(EL)	[For NTSC]
IC557	8-759-081-42	s	IC TC74VHC00F	[For NTSC]
IC558	8-759-186-84	s	IC TC74VHC86F	[For NTSC]
IC559	8-759-081-48	s	IC TC74VHC08F	
IC560	8-759-186-63	s	IC TC74VHC245F(EL)	
IC562	8-759-186-63	s	IC TC74VHC245F(EL)	
IC563	8-759-186-51	s	IC TC74VHC157F	
IC564	8-759-186-51	s	IC TC74VHC157F	
L11	1-412-364-11	s	INDUCTOR, CHIP 0uH	
L101	1-410-381-11	s	INDUCTOR, CHIP 10uH	
L102	1-410-740-31	s	INDUCTOR, CHIP 0.82uH	
L103	1-410-381-11	s	INDUCTOR, CHIP 10uH	
L104	1-410-740-31	s	INDUCTOR, CHIP 0.82uH	
L105	1-410-381-11	s	INDUCTOR, CHIP 10uH	
L151	1-410-381-11	s	INDUCTOR, CHIP 10uH	
L152	1-410-381-11	s	INDUCTOR, CHIP 10uH	
L153	1-410-381-11	s	INDUCTOR, CHIP 10uH	
L201	1-410-381-11	s	INDUCTOR, CHIP 10uH	
L202	1-410-378-11	s	INDUCTOR, CHIP 5.6uH	
L203	1-410-381-11	s	INDUCTOR, CHIP 10uH	
L242	1-410-381-11	s	INDUCTOR, CHIP 10uH	[For NTSC]
L251	1-410-381-11	s	INDUCTOR, CHIP 10uH	
L252	1-410-381-11	s	INDUCTOR, CHIP 10uH	
L253	1-410-381-11	s	INDUCTOR, CHIP 10uH	
L254	1-410-740-31	s	INDUCTOR, CHIP 0.82uH	
L255	1-410-381-11	s	INDUCTOR, CHIP 10uH	
L303	1-410-740-31	s	INDUCTOR, CHIP 0.82uH	
L351	1-410-381-11	s	INDUCTOR, CHIP 10uH	
L352	1-410-740-31	s	INDUCTOR, CHIP 0.82uH	
L353	1-410-381-11	s	INDUCTOR, CHIP 10uH	
L401	1-410-381-11	s	INDUCTOR, CHIP 10uH	
L402	1-410-381-11	s	INDUCTOR, CHIP 10uH	
L451	1-410-740-31	s	INDUCTOR, CHIP 0.82uH	
L452	1-410-740-31	s	INDUCTOR, CHIP 0.82uH	
L502	1-410-740-31	s	INDUCTOR, CHIP 0.82uH	
L551	1-410-740-31	s	INDUCTOR, CHIP 0.82uH	
L553	1-410-381-11	s	INDUCTOR, CHIP 10uH	
L554	1-410-381-11	s	INDUCTOR, CHIP 10uH	
PS11	⚠ 1-533-282-21	s	LINK, IC, CHIP 2A	
PS12	⚠ 1-533-282-21	s	LINK, IC, CHIP 2A	
PS13	⚠ 1-576-124-11	s	LINK, IC, CHIP 1A	
PS14	⚠ 1-576-124-11	s	LINK, IC, CHIP 1A	

(DV-15/15A BOARD; Suffix -11, 12)

Ref. No. or Q'ty	Part No.	SP	Description	
Q241	8-729-117-32	s	TRANSISTOR 2SC4177	[For NTSC]
Q242	8-729-117-32	s	TRANSISTOR 2SC4177	[For NTSC]
Q250	8-729-026-55	s	TRANSISTOR FMY4A-T148	
Q251	8-729-140-63	s	TRANSISTOR 2SA1611-M5M6	[For NTSC]
Q252	8-729-117-32	s	TRANSISTOR 2SC4177	[For NTSC]
Q253	8-729-026-55	s	TRANSISTOR FMY4A-T148	
Q258	8-729-140-63	s	TRANSISTOR 2SA1611-M5M6	
Q301	8-729-027-59	s	TRANSISTOR DTC144EKA-T146	
Q551	8-729-027-38	s	TRANSISTOR DTA144EKA-T146	[For NTSC]
Q552	8-729-027-38	s	TRANSISTOR DTA144EKA-T146	[For NTSC]
R11	1-216-025-91	s	METAL, CHIP 100 5% 1/10W	
R14	1-216-025-91	s	METAL, CHIP 100 5% 1/10W	
R15	1-216-025-91	s	METAL, CHIP 100 5% 1/10W	
R19	1-216-025-91	s	METAL, CHIP 100 5% 1/10W	
R101	1-216-089-91	s	METAL, CHIP 47k 5% 1/10W	
R102	1-216-025-91	s	METAL, CHIP 100 5% 1/10W	
R103	1-216-025-91	s	METAL, CHIP 100 5% 1/10W	
R104	1-216-041-00	s	METAL, CHIP 470 5% 1/10W	
R105	1-216-073-00	s	METAL, CHIP 10k 5% 1/10W	
R106	1-216-065-00	s	METAL, CHIP 4.7k 5% 1/10W	
R107	1-216-073-00	s	METAL, CHIP 10k 5% 1/10W	
R108	1-216-017-91	s	METAL, CHIP 47 5% 1/10W	
R109	1-216-121-91	s	METAL, CHIP 1M 5% 1/10W	
R110	1-216-041-00	s	METAL, CHIP 470 5% 1/10W	
R111	1-216-073-00	s	METAL, CHIP 10k 5% 1/10W	
R112	1-216-065-00	s	METAL, CHIP 4.7k 5% 1/10W	
R113	1-216-073-00	s	METAL, CHIP 10k 5% 1/10W	
R114	1-216-017-91	s	METAL, CHIP 47 5% 1/10W	
R115	1-216-025-91	s	METAL, CHIP 100 5% 1/10W	
R116	1-216-025-91	s	METAL, CHIP 100 5% 1/10W	
R151	1-216-025-91	s	METAL, CHIP 100 5% 1/10W	
R152	1-216-025-91	s	METAL, CHIP 100 5% 1/10W	
R153	1-216-025-91	s	METAL, CHIP 100 5% 1/10W	
R154	1-216-073-00	s	METAL, CHIP 10k 5% 1/10W	
R161	1-216-025-91	s	METAL, CHIP 100 5% 1/10W	
R162	1-216-025-91	s	METAL, CHIP 100 5% 1/10W	
R163	1-216-025-91	s	METAL, CHIP 100 5% 1/10W	
R166	1-216-025-91	s	METAL, CHIP 100 5% 1/10W	
R201	1-216-025-91	s	METAL, CHIP 100 5% 1/10W	
R202	1-216-025-91	s	METAL, CHIP 100 5% 1/10W	
R203	1-216-025-91	s	METAL, CHIP 100 5% 1/10W	
R204	1-216-089-91	s	METAL, CHIP 47k 5% 1/10W	
R205	1-216-295-91	s	RES, CHIP 0	
R206	1-216-295-91	s	RES, CHIP 0	
R207	1-216-057-00	s	METAL, CHIP 2.2k 5% 1/10W	
R208	1-216-085-00	s	METAL, CHIP 33k 5% 1/10W	
R209	1-216-085-00	s	METAL, CHIP 33k 5% 1/10W	
R210	1-216-025-91	s	METAL, CHIP 100 5% 1/10W	
R211	1-216-295-91	s	RES, CHIP 0	
R212	1-216-085-00	s	METAL, CHIP 33k 5% 1/10W	
R213	1-216-085-00	s	METAL, CHIP 33k 5% 1/10W	
R214	1-216-295-91	s	RES, CHIP 0	
R215	1-216-295-91	s	RES, CHIP 0	
R216	1-216-017-91	s	METAL, CHIP 47 5% 1/10W	
R217	1-216-295-91	s	RES, CHIP 0	
R218	1-216-295-91	s	RES, CHIP 0	
R220	1-216-085-00	s	METAL, CHIP 33k 5% 1/10W	
R221	1-216-085-00	s	METAL, CHIP 33k 5% 1/10W	
R222	1-216-295-91	s	RES, CHIP 0	

(DV-15/15A BOARD; Suffix -11, 12)

Ref. No. or Q'ty	Part No.	SP	Description	
R223	1-216-049-91	s	METAL, CHIP 1k 5% 1/10W	
R224	1-216-073-00	s	METAL, CHIP 10k 5% 1/10W	
R225	1-216-295-91	s	RES, CHIP 0	
R226	1-216-073-00	s	METAL, CHIP 10k 5% 1/10W	
R227	1-216-687-11	s	METAL, CHIP 33k 0.5% 1/10W	
R231	1-216-295-91	s	RES, CHIP 0	[For NTSC]
R241	1-216-037-00	s	METAL, CHIP 330 5% 1/10W	[For NTSC]
R242	1-216-049-91	s	METAL, CHIP 1k 5% 1/10W	[For NTSC]
R243	1-216-037-00	s	METAL, CHIP 330 5% 1/10W	[For NTSC]
R244	1-216-113-00	s	METAL, CHIP 470k 5% 1/10W	[For NTSC]
R245	1-216-025-91	s	METAL, CHIP 100 5% 1/10W	
R246	1-216-049-91	s	METAL, CHIP 1k 5% 1/10W	
R247	1-216-121-91	s	METAL, CHIP 1M 5% 1/10W	[For NTSC]
R250	1-216-022-00	s	METAL, CHIP 75 5% 1/10W	
R251	1-216-295-91	s	RES, CHIP 0	
R252	1-216-295-91	s	RES, CHIP 0	
R253	1-216-657-11	s	METAL, CHIP 1.8k 0.5% 1/10W	[For NTSC]
R254	1-216-659-11	s	METAL, CHIP 2.2k 0.5% 1/10W	[For NTSC]
R255	1-216-057-00	s	METAL, CHIP 2.2k 5% 1/10W	
R256	1-216-057-00	s	METAL, CHIP 2.2k 5% 1/10W	
R257	1-216-001-00	s	METAL, CHIP 10 5% 1/10W	
R259	1-216-022-00	s	METAL, CHIP 75 5% 1/10W	
R260	1-216-041-00	s	METAL, CHIP 470 5% 1/10W	[For NTSC]
R261	1-216-057-00	s	METAL, CHIP 2.2k 5% 1/10W	
R262	1-216-295-91	s	RES, CHIP 0	
R263	1-216-081-00	s	METAL, CHIP 22k 5% 1/10W	[For NTSC]
R264	1-216-025-91	s	METAL, CHIP 100 5% 1/10W	
R265	1-216-025-91	s	METAL, CHIP 100 5% 1/10W	
R266	1-216-057-00	s	METAL, CHIP 2.2k 5% 1/10W	
R267	1-216-001-00	s	METAL, CHIP 10 5% 1/10W	
R269	1-216-017-91	s	METAL, CHIP 47 5% 1/10W	
R272	1-216-017-91	s	METAL, CHIP 47 5% 1/10W	
R273	1-216-017-91	s	METAL, CHIP 47 5% 1/10W	
R281	1-216-025-91	s	METAL, CHIP 100 5% 1/10W	
R282	1-216-025-91	s	METAL, CHIP 100 5% 1/10W	
R284	1-216-649-11	s	METAL, CHIP 820 0.5% 1/10W	
R287	1-216-025-91	s	METAL, CHIP 100 5% 1/10W	
R288	1-216-017-91	s	METAL, CHIP 47 5% 1/10W	
R289	1-216-682-11	s	METAL, CHIP 20k 0.5% 1/10W	
R290	1-216-682-11	s	METAL, CHIP 20k 0.5% 1/10W	
R291	1-216-033-00	s	METAL, CHIP 220 5% 1/10W	
R292	1-216-025-91	s	METAL, CHIP 100 5% 1/10W	
R293	1-216-677-11	s	METAL, CHIP 12k 0.5% 1/10W	
R294	1-216-682-11	s	METAL, CHIP 20k 0.5% 1/10W	
R295	1-216-649-11	s	METAL, CHIP 820 0.5% 1/10W	
R296	1-216-025-91	s	METAL, CHIP 100 5% 1/10W	
R297	1-216-025-91	s	METAL, CHIP 100 5% 1/10W	
R298	1-216-025-91	s	METAL, CHIP 100 5% 1/10W	
R311	1-216-025-91	s	METAL, CHIP 100 5% 1/10W	[For NTSC]
R312	1-216-295-91	s	RES, CHIP 0	
R351	1-216-025-91	s	METAL, CHIP 100 5% 1/10W	
R354	1-216-089-91	s	METAL, CHIP 47k 5% 1/10W	
R356	1-216-089-91	s	METAL, CHIP 47k 5% 1/10W	
R357	1-216-025-91	s	METAL, CHIP 100 5% 1/10W	

(DV-15/15A BOARD; Suffix -11, 12)

Ref. No. or Q'ty	Part No.	SP	Description	
R358	1-216-025-91	s	METAL, CHIP 100 5% 1/10W	
R359	1-216-025-91	s	METAL, CHIP 100 5% 1/10W	
R364	1-216-025-91	s	METAL, CHIP 100 5% 1/10W	
R401	1-216-295-91	s	RES, CHIP 0	
R403	1-216-295-91	s	RES, CHIP 0	
R408	1-216-073-00	s	METAL, CHIP 10k 5% 1/10W	
R451	1-216-089-91	s	METAL, CHIP 47k 5% 1/10W	
R452	1-216-089-91	s	METAL, CHIP 47k 5% 1/10W	
R453	1-216-295-91	s	RES, CHIP 0	
R454	1-216-073-00	s	METAL, CHIP 10k 5% 1/10W	
R459	1-216-025-91	s	METAL, CHIP 100 5% 1/10W	
R460	1-216-025-91	s	METAL, CHIP 100 5% 1/10W	
R461	1-216-025-91	s	METAL, CHIP 100 5% 1/10W	
R462	1-216-025-91	s	METAL, CHIP 100 5% 1/10W	
R463	1-216-025-91	s	METAL, CHIP 100 5% 1/10W	
R512	1-216-025-91	s	METAL, CHIP 100 5% 1/10W	[For NTSC]
R556	1-216-295-91	s	RES, CHIP 0	[For PAL]
R557	1-216-295-91	s	RES, CHIP 0	[For PAL]
R558	1-216-295-91	s	RES, CHIP 0	[For PAL]
R560	1-216-295-91	s	RES, CHIP 0	[For PAL]
R561	1-216-295-91	s	RES, CHIP 0	[For PAL]
R575	1-216-073-00	s	METAL, CHIP 10k 5% 1/10W	[For NTSC]
R575	1-216-073-00	s	METAL, CHIP 10k 5% 1/10W	[For NTSC]
R576	1-216-073-00	s	METAL, CHIP 10k 5% 1/10W	[For NTSC]
RB14	1-239-998-11	s	RESISTOR BLOCK, CHIP 100 x 4	
RB15	1-239-998-11	s	RESISTOR BLOCK, CHIP 100 x 4	
RB16	1-239-998-11	s	RESISTOR BLOCK, CHIP 100 x 4	
RB20	1-239-998-11	s	RESISTOR BLOCK, CHIP 100 x 4	
RB101	1-239-308-11	s	RESISTOR BLOCK, CHIP 47k x 8	
RB102	1-239-998-11	s	RESISTOR BLOCK, CHIP 100 x 4	
RB103	1-239-998-11	s	RESISTOR BLOCK, CHIP 100 x 4	
RB151	1-239-998-11	s	RESISTOR BLOCK, CHIP 100 x 4	
RB152	1-239-998-11	s	RESISTOR BLOCK, CHIP 100 x 4	
RB153	1-239-998-11	s	RESISTOR BLOCK, CHIP 100 x 4	
RB201	1-239-998-11	s	RESISTOR BLOCK, CHIP 100 x 4	
RB202	1-239-998-11	s	RESISTOR BLOCK, CHIP 100 x 4	
RB203	1-239-998-11	s	RESISTOR BLOCK, CHIP 100 x 4	
RB204	1-239-308-11	s	RESISTOR BLOCK, CHIP 47k x 8	
RB251	1-239-998-11	s	RESISTOR BLOCK, CHIP 100 x 4	
RB301	1-239-998-11	s	RESISTOR BLOCK, CHIP 100 x 4	[For NTSC]
RB302	1-239-998-11	s	RESISTOR BLOCK, CHIP 100 x 4	[For NTSC]
RB354	1-239-998-11	s	RESISTOR BLOCK, CHIP 100 x 4	
RB355	1-239-998-11	s	RESISTOR BLOCK, CHIP 100 x 4	
RB356	1-239-998-11	s	RESISTOR BLOCK, CHIP 100 x 4	
RB357	1-239-998-11	s	RESISTOR BLOCK, CHIP 100 x 4	
RB451	1-239-998-11	s	RESISTOR BLOCK, CHIP 100 x 4	
RB452	1-239-998-11	s	RESISTOR BLOCK, CHIP 100 x 4	
RB453	1-239-998-11	s	RESISTOR BLOCK, CHIP 100 x 4	
RB454	1-239-998-11	s	RESISTOR BLOCK, CHIP 100 x 4	
RB455	1-239-308-11	s	RESISTOR BLOCK, CHIP 47k x 8	
RB456	1-239-998-11	s	RESISTOR BLOCK, CHIP 100 x 4	
RB457	1-239-998-11	s	RESISTOR BLOCK, CHIP 100 x 4	
RB458	1-239-998-11	s	RESISTOR BLOCK, CHIP 100 x 4	
RB459	1-239-998-11	s	RESISTOR BLOCK, CHIP 100 x 4	

(DV-15/15A BOARD; Suffix -11, 12)

Ref. No. or Q'ty	Part No.	SP	Description
RB501	1-239-998-11	s	RESISTOR BLOCK, CHIP 100 x 4 [For NTSC]
RB502	1-239-998-11	s	RESISTOR BLOCK, CHIP 100 x 4 [For NTSC]
RB551	1-239-998-11	s	RESISTOR BLOCK, CHIP 100 x 4
RB552	1-239-998-11	s	RESISTOR BLOCK, CHIP 100 x 4
RB553	1-239-998-11	s	RESISTOR BLOCK, CHIP 100 x 4
RB554	1-239-998-11	s	RESISTOR BLOCK, CHIP 100 x 4
RB555	1-239-998-11	s	RESISTOR BLOCK, CHIP 100 x 4
RB556	1-239-998-11	s	RESISTOR BLOCK, CHIP 100 x 4
RV201	1-241-264-11	s	RES, ADJ, METAL 10k
X101	1-760-654-21	s	CRYSTAL, CHIP 13.50MHz
X241	1-579-466-11	s	CRYSTAL, CHIP 3.579545MHz[For NTSC]

FP-75 BOARD

Ref. No. or Q'ty	Part No.	SP	Description
1pc	A-8277-913-A	o	MOUNTED CIRCUIT BOARD, FP-75
C1	1-163-037-11	s	CERAMIC, CHIP 0.022uF 10% 25V
CN724	1-573-397-11	s	CONNECTOR, FPC 11P
D1	8-719-024-81	s	DIODE 1SS300-TE85L
D2	8-719-024-81	s	DIODE 1SS300-TE85L
D3	8-719-024-81	s	DIODE 1SS300-TE85L
D4	8-719-024-81	s	DIODE 1SS300-TE85L
D5	8-719-024-81	s	DIODE 1SS300-TE85L
R1	1-216-057-00	s	METAL, CHIP 2.2k 5% 1/10W
R2	1-216-057-00	s	METAL, CHIP 2.2k 5% 1/10W
RV1	1-237-695-11	s	RES, VAR CARBON 5k
RV2	1-237-695-11	s	RES, VAR CARBON 5k
S1	1-571-977-11	s	SWITCH, PUSH
S2	1-571-977-11	s	SWITCH, PUSH
S3	1-571-977-11	s	SWITCH, PUSH
S4	1-571-977-11	s	SWITCH, PUSH
S5	1-571-977-11	s	SWITCH, PUSH
S6	1-571-977-11	s	SWITCH, PUSH
S7	1-571-977-11	s	SWITCH, PUSH
S8	1-571-977-11	s	SWITCH, PUSH
S9	1-762-234-11	s	SWITCH, SLIDE
S10	1-571-640-11	s	SWITCH, SLIDE

HP-73 BOARD

Ref. No. or Q'ty	Part No.	SP	Description
1pc	A-8277-912-A	o	MOUNTED CIRCUIT BOARD, HP-73
CN731	1-506-477-11	s	CONNECTOR 12P, MALE
CN733	1-506-468-11	s	CONNECTOR 3P, MALE
JW1	1-219-202-11	s	RES 0

IO-149/149A BOARD; Suffix -14

Ref. No. or Q'ty	Part No.	SP	Description
			This list corresponds to the board suffix number -14.
1pc	A-8315-283-A	s	MOUNTED CIRCUIT BOARD, IO-149 [For NTSC]
1pc	A-8315-293-A	s	MOUNTED CIRCUIT BOARD, IO-149A [For PAL]
1pc	7-621-759-45	s	+PSW, 2.6x6
1pc	3-179-085-01	s	LEVER (L), PRINTED CIRCUIT BOARD
1pc	3-179-084-01	s	LEVER (R), PRINTED CIRCUIT BOARD
C1	1-126-392-11	s	ELECT, CHIP 100uF 20% 6.3V
C2	1-163-038-91	s	CERAMIC, CHIP 0.1uF 25V
C3	1-126-392-11	s	ELECT, CHIP 100uF 20% 6.3V
C4	1-163-038-91	s	CERAMIC, CHIP 0.1uF 25V
C5	1-126-392-11	s	ELECT, CHIP 100uF 20% 6.3V
C6	1-163-038-91	s	CERAMIC, CHIP 0.1uF 25V
C11	1-126-396-11	s	ELECT, CHIP 47uF 20% 16V
C12	1-163-038-91	s	CERAMIC, CHIP 0.1uF 25V
C13	1-126-396-11	s	ELECT, CHIP 47uF 20% 16V
C14	1-163-038-91	s	CERAMIC, CHIP 0.1uF 25V
C15	1-126-396-11	s	ELECT, CHIP 47uF 20% 16V
C16	1-163-038-91	s	CERAMIC, CHIP 0.1uF 25V
C21	1-126-396-11	s	ELECT, CHIP 47uF 20% 16V
C22	1-163-038-91	s	CERAMIC, CHIP 0.1uF 25V
C23	1-126-396-11	s	ELECT, CHIP 47uF 20% 16V
C24	1-163-038-91	s	CERAMIC, CHIP 0.1uF 25V
C25	1-126-396-11	s	ELECT, CHIP 47uF 20% 16V
C26	1-163-038-91	s	CERAMIC, CHIP 0.1uF 25V
C31	1-126-396-11	s	ELECT, CHIP 47uF 20% 16V
C32	1-163-038-91	s	CERAMIC, CHIP 0.1uF 25V
C33	1-126-396-11	s	ELECT, CHIP 47uF 20% 16V
C34	1-163-038-91	s	CERAMIC, CHIP 0.1uF 25V
C35	1-126-396-11	s	ELECT, CHIP 47uF 20% 16V
C36	1-163-038-91	s	CERAMIC, CHIP 0.1uF 25V
C37	1-126-396-11	s	ELECT, CHIP 47uF 20% 16V
C38	1-163-038-91	s	CERAMIC, CHIP 0.1uF 25V
C39	1-126-396-11	s	ELECT, CHIP 47uF 20% 16V
C40	1-163-038-91	s	CERAMIC, CHIP 0.1uF 25V
C101	1-164-004-11	s	CERAMIC, CHIP 0.1uF 10% 25V
C102	1-163-037-11	s	CERAMIC, CHIP 0.022uF 10% 25V
C103	1-126-396-11	s	ELECT, CHIP 47uF 20% 16V
C104	1-163-037-11	s	CERAMIC, CHIP 0.022uF 10% 25V
C105	1-163-037-11	s	CERAMIC, CHIP 0.022uF 10% 25V
C106	1-163-037-11	s	CERAMIC, CHIP 0.022uF 10% 25V
C107	1-163-037-11	s	CERAMIC, CHIP 0.022uF 10% 25V
C108	1-163-235-11	s	CERAMIC, CHIP 22pF 5% 50V
C109	1-163-037-11	s	CERAMIC, CHIP 0.022uF 10% 25V
C110	1-164-004-11	s	CERAMIC, CHIP 0.1uF 10% 25V
C111	1-164-004-11	s	CERAMIC, CHIP 0.1uF 10% 25V
C112	1-163-275-11	s	CERAMIC, CHIP 0.001uF 5% 50V
C113	1-163-275-11	s	CERAMIC, CHIP 0.001uF 5% 50V
C114	1-164-004-11	s	CERAMIC, CHIP 0.1uF 10% 25V
C115	1-164-004-11	s	CERAMIC, CHIP 0.1uF 10% 25V
C116	1-163-275-11	s	CERAMIC, CHIP 0.001uF 5% 50V
C117	1-163-275-11	s	CERAMIC, CHIP 0.001uF 5% 50V
C118	1-163-237-11	s	CERAMIC, CHIP 27pF 5% 50V

(IO-149/149A BOARD; Suffix -14)

Ref. No. or Q'ty	Part No.	SP	Description
C119	1-163-237-11	s	CERAMIC, CHIP 27pF 5% 50V
C120	1-163-037-11	s	CERAMIC, CHIP 0.022uF 10% 25V
C121	1-163-037-11	s	CERAMIC, CHIP 0.022uF 10% 25V
C122	1-163-037-11	s	CERAMIC, CHIP 0.022uF 10% 25V
C123	1-164-004-11	s	CERAMIC, CHIP 0.1uF 10% 25V
C124	1-163-037-11	s	CERAMIC, CHIP 0.022uF 10% 25V
C125	1-126-392-11	s	ELECT, CHIP 100uF 20% 6.3V
C126	1-163-275-11	s	CERAMIC, CHIP 0.001uF 5% 50V
C127	1-164-004-11	s	CERAMIC, CHIP 0.1uF 10% 25V
C128	1-163-037-11	s	CERAMIC, CHIP 0.022uF 10% 25V
C129	1-163-037-11	s	CERAMIC, CHIP 0.022uF 10% 25V
C130	1-163-275-11	s	CERAMIC, CHIP 0.001uF 5% 50V
C131	1-163-037-11	s	CERAMIC, CHIP 0.022uF 10% 25V
C132	1-163-037-11	s	CERAMIC, CHIP 0.022uF 10% 25V
C133	1-163-237-11	s	CERAMIC, CHIP 27pF 5% 50V
C134	1-126-394-11	s	ELECT, CHIP 10uF 20% 16V
C135	1-126-394-11	s	ELECT, CHIP 10uF 20% 16V
C136	1-163-037-11	s	CERAMIC, CHIP 0.022uF 10% 25V
C137	1-163-037-11	s	CERAMIC, CHIP 0.022uF 10% 25V
C138	1-163-037-11	s	CERAMIC, CHIP 0.022uF 10% 25V
C139	1-163-037-11	s	CERAMIC, CHIP 0.022uF 10% 25V
C140	1-163-037-11	s	CERAMIC, CHIP 0.022uF 10% 25V
C141	1-163-037-11	s	CERAMIC, CHIP 0.022uF 10% 25V
C142	1-126-392-11	s	ELECT, CHIP 100uF 20% 6.3V
C143	1-126-392-11	s	ELECT, CHIP 100uF 20% 6.3V
C144	1-163-037-11	s	CERAMIC, CHIP 0.022uF 10% 25V
C145	1-163-037-11	s	CERAMIC, CHIP 0.022uF 10% 25V
C146	1-163-037-11	s	CERAMIC, CHIP 0.022uF 10% 25V
C147	1-163-037-11	s	CERAMIC, CHIP 0.022uF 10% 25V
C148	1-163-037-11	s	CERAMIC, CHIP 0.022uF 10% 25V
C149	1-163-037-11	s	CERAMIC, CHIP 0.022uF 10% 25V
C150	1-163-037-11	s	CERAMIC, CHIP 0.022uF 10% 25V
C151	1-163-037-11	s	CERAMIC, CHIP 0.022uF 10% 25V
C152	1-163-037-11	s	CERAMIC, CHIP 0.022uF 10% 25V
C153	1-126-391-11	s	ELECT, CHIP 47uF 20% 6.3V
C154	1-163-231-11	s	CERAMIC, CHIP 15pF 5% 50V
C155	1-163-037-11	s	CERAMIC, CHIP 0.022uF 10% 25V
C156	1-163-038-91	s	CERAMIC, CHIP 0.1uF 25V
C157	1-163-037-11	s	CERAMIC, CHIP 0.022uF 10% 25V
C158	1-163-037-11	s	CERAMIC, CHIP 0.022uF 10% 25V
C159	1-163-038-91	s	CERAMIC, CHIP 0.1uF 25V
C160	1-163-037-11	s	CERAMIC, CHIP 0.022uF 10% 25V
C161	1-163-037-11	s	CERAMIC, CHIP 0.022uF 10% 25V
C162	1-163-038-91	s	CERAMIC, CHIP 0.1uF 25V
C163	1-163-038-91	s	CERAMIC, CHIP 0.1uF 25V
C164	1-163-038-91	s	CERAMIC, CHIP 0.1uF 25V
C165	1-126-391-11	s	ELECT, CHIP 47uF 20% 6.3V
C166	1-163-037-11	s	CERAMIC, CHIP 0.022uF 10% 25V
C167	1-126-391-11	s	ELECT, CHIP 47uF 20% 6.3V
C168	1-163-037-11	s	CERAMIC, CHIP 0.022uF 10% 25V
C169	1-163-037-11	s	CERAMIC, CHIP 0.022uF 10% 25V
C170	1-163-037-11	s	CERAMIC, CHIP 0.022uF 10% 25V
C171	1-126-391-11	s	ELECT, CHIP 47uF 20% 6.3V
C172	1-126-396-11	s	ELECT, CHIP 47uF 20% 16V
C173	1-126-396-11	s	ELECT, CHIP 47uF 20% 16V
C174	1-126-391-11	s	ELECT, CHIP 47uF 20% 6.3V
C175	1-126-391-11	s	ELECT, CHIP 47uF 20% 6.3V
C176	1-126-391-11	s	ELECT, CHIP 47uF 20% 6.3V
C177	1-126-391-11	s	ELECT, CHIP 47uF 20% 6.3V

(IO-149/149A BOARD; Suffix -14)

Ref. No. or Q'ty	Part No.	SP	Description
C178	1-126-391-11	s	ELECT, CHIP 47uF 20% 6.3V
C179	1-163-037-11	s	CERAMIC, CHIP 0.022uF 10% 25V
C180	1-163-037-11	s	CERAMIC, CHIP 0.022uF 10% 25V
C181	1-163-037-11	s	CERAMIC, CHIP 0.022uF 10% 25V
C182	1-163-037-11	s	CERAMIC, CHIP 0.022uF 10% 25V
C183	1-163-037-11	s	CERAMIC, CHIP 0.022uF 10% 25V
C184	1-163-037-11	s	CERAMIC, CHIP 0.022uF 10% 25V
C185	1-163-037-11	s	CERAMIC, CHIP 0.022uF 10% 25V
C186	1-163-037-11	s	CERAMIC, CHIP 0.022uF 10% 25V
C187	1-163-037-11	s	CERAMIC, CHIP 0.022uF 10% 25V
C188	1-163-235-11	s	CERAMIC, CHIP 22pF 5% 50V[For NTSC]
C189	1-163-235-11	s	CERAMIC, CHIP 22pF 5% 50V[For NTSC]
C190	1-163-099-00	s	CERAMIC, CHIP 18pF 5% 50V
C191	1-163-037-11	s	CERAMIC, CHIP 0.022uF 10% 25V
C192	1-163-037-11	s	CERAMIC, CHIP 0.022uF 10% 25V
C193	1-163-037-11	s	CERAMIC, CHIP 0.022uF 10% 25V
C194	1-126-401-11	s	ELECT, CHIP 1uF 20% 50V
C195	1-126-401-11	s	ELECT, CHIP 1uF 20% 50V
C196	1-126-394-11	s	ELECT, CHIP 10uF 20% 16V
C197	1-126-401-11	s	ELECT, CHIP 1uF 20% 50V
C198	1-126-394-11	s	ELECT, CHIP 10uF 20% 16V
C199	1-163-038-91	s	CERAMIC, CHIP 0.1uF 25V
C200	1-126-401-11	s	ELECT, CHIP 1uF 20% 50V
C201	1-163-038-91	s	CERAMIC, CHIP 0.1uF 25V
C202	1-163-809-11	s	CERAMIC, CHIP 0.047uF 10% 25V
C203	1-163-809-11	s	CERAMIC, CHIP 0.047uF 10% 25V
C204	1-163-809-11	s	CERAMIC, CHIP 0.047uF 10% 25V
C205	1-163-227-11	s	CERAMIC, CHIP 10pF 5% 50V
C206	1-163-037-11	s	CERAMIC, CHIP 0.022uF 10% 25V
C207	1-163-037-11	s	CERAMIC, CHIP 0.022uF 10% 25V
C208	1-163-037-11	s	CERAMIC, CHIP 0.022uF 10% 25V
C209	1-163-037-11	s	CERAMIC, CHIP 0.022uF 10% 25V
C210	1-163-037-11	s	CERAMIC, CHIP 0.022uF 10% 25V
C211	1-126-396-11	s	ELECT, CHIP 47uF 20% 16V
C212	1-163-037-11	s	CERAMIC, CHIP 0.022uF 10% 25V
C213	1-163-235-11	s	CERAMIC, CHIP 22pF 5% 50V
C214	1-163-037-11	s	CERAMIC, CHIP 0.022uF 10% 25V
C215	1-126-396-11	s	ELECT, CHIP 47uF 20% 16V
C216	1-163-037-11	s	CERAMIC, CHIP 0.022uF 10% 25V
C217	1-126-390-11	s	ELECT, CHIP 22uF 20% 6.3V
C218	1-163-037-11	s	CERAMIC, CHIP 0.022uF 10% 25V
C219	1-163-037-11	s	CERAMIC, CHIP 0.022uF 10% 25V
C220	1-163-249-11	s	CERAMIC, CHIP 82pF 5% 50V[For NTSC]
C220	1-163-251-11	s	CERAMIC, CHIP 100pF 5% 50V[For PAL]
C221	1-163-243-11	s	CERAMIC, CHIP 47pF 5% 50V
C222	1-163-227-11	s	CERAMIC, CHIP 10pF 5% 50V
C223	1-163-118-00	s	CERAMIC, CHIP 110pF 5% 50V [For NTSC]
C223	1-163-121-00	s	CERAMIC, CHIP 150pF 5% 50V[For PAL]
C224	1-163-037-11	s	CERAMIC, CHIP 0.022uF 10% 25V
C225	1-163-224-11	s	CERAMIC, CHIP 7pF 0.25pF 50V [For NTSC]
C225	1-163-087-00	s	CERAMIC, CHIP 4pF 50V [For PAL]
C226	1-163-037-11	s	CERAMIC, CHIP 0.022uF 10% 25V
C227	1-163-227-11	s	CERAMIC, CHIP 10pF 5% 50V [For PAL]
C228	1-163-231-11	s	CERAMIC, CHIP 15pF 5% 50V
C229	1-163-259-91	s	CERAMIC, CHIP 220pF 5% 50V

(IO-149/149A BOARD; Suffix -14)

Ref. No. or Q'ty	Part No.	SP	Description
C230	1-126-390-11	s	ELECT, CHIP 22uF 20% 6.3V
C231	1-163-037-11	s	CERAMIC, CHIP 0.022uF 10% 25V
C232	1-163-037-11	s	CERAMIC, CHIP 0.022uF 10% 25V
C233	1-163-037-11	s	CERAMIC, CHIP 0.022uF 10% 25V
C234	1-163-037-11	s	CERAMIC, CHIP 0.022uF 10% 25V
C235	1-163-227-11	s	CERAMIC, CHIP 10pF 5% 50V
C301	1-126-391-11	s	ELECT, CHIP 47uF 20% 6.3V
C302	1-126-391-11	s	ELECT, CHIP 47uF 20% 6.3V
C303	1-163-038-91	s	CERAMIC, CHIP 0.1uF 25V
C304	1-126-391-11	s	ELECT, CHIP 47uF 20% 6.3V
C305	1-126-391-11	s	ELECT, CHIP 47uF 20% 6.3V
C306	1-163-038-91	s	CERAMIC, CHIP 0.1uF 25V
C307	1-163-038-91	s	CERAMIC, CHIP 0.1uF 25V
C308	1-163-038-91	s	CERAMIC, CHIP 0.1uF 25V
C309	1-163-231-11	s	CERAMIC, CHIP 15pF 5% 50V
C310	1-163-037-11	s	CERAMIC, CHIP 0.022uF 10% 25V
C311	1-163-120-00	s	CERAMIC, CHIP 130pF 5% 50V [For NTSC]
C311	1-163-259-91	s	CERAMIC, CHIP 220pF 5% 50V[For PAL]
C312	1-163-037-11	s	CERAMIC, CHIP 0.022uF 10% 25V
C313	1-163-038-91	s	CERAMIC, CHIP 0.1uF 25V
C314	1-163-038-91	s	CERAMIC, CHIP 0.1uF 25V
C315	1-163-037-11	s	CERAMIC, CHIP 0.022uF 10% 25V
C316	1-163-037-11	s	CERAMIC, CHIP 0.022uF 10% 25V
C317	1-163-037-11	s	CERAMIC, CHIP 0.022uF 10% 25V
C318	1-163-231-11	s	CERAMIC, CHIP 15pF 5% 50V
C319	1-163-120-00	s	CERAMIC, CHIP 130pF 5% 50V [For NTSC]
C319	1-163-259-91	s	CERAMIC, CHIP 220pF 5% 50V[For PAL]
C320	1-163-037-11	s	CERAMIC, CHIP 0.022uF 10% 25V
C321	1-126-391-11	s	ELECT, CHIP 47uF 20% 6.3V
C324	1-163-038-91	s	CERAMIC, CHIP 0.1uF 25V
C326	1-126-396-11	s	ELECT, CHIP 47uF 20% 16V
C327	1-126-391-11	s	ELECT, CHIP 47uF 20% 6.3V
C328	1-163-037-11	s	CERAMIC, CHIP 0.022uF 10% 25V
C329	1-126-396-11	s	ELECT, CHIP 47uF 20% 16V
C330	1-163-037-11	s	CERAMIC, CHIP 0.022uF 10% 25V
C331	1-126-396-11	s	ELECT, CHIP 47uF 20% 16V
C332	1-163-038-91	s	CERAMIC, CHIP 0.1uF 25V
C333	1-163-038-91	s	CERAMIC, CHIP 0.1uF 25V
C334	1-163-224-11	s	CERAMIC, CHIP 7pF 50V [For NTSC]
C334	1-163-222-11	s	CERAMIC, CHIP 5pF 50V [For PAL]
C335	1-163-231-11	s	CERAMIC, CHIP 15pF 5% 50V
C336	1-163-037-11	s	CERAMIC, CHIP 0.022uF 10% 25V
C337	1-163-231-11	s	CERAMIC, CHIP 15pF 5% 50V
C338	1-163-038-91	s	CERAMIC, CHIP 0.1uF 25V
C339	1-163-243-11	s	CERAMIC, CHIP 47pF 5% 50V
C340	1-163-243-11	s	CERAMIC, CHIP 47pF 5% 50V
C341	1-163-239-11	s	CERAMIC, CHIP 33pF 5% 50V
C342	1-163-239-11	s	CERAMIC, CHIP 33pF 5% 50V
C343	1-126-392-11	s	ELECT, CHIP 100uF 20% 6.3V
C344	1-163-235-11	s	CERAMIC, CHIP 22pF 5% 50V[For NTSC]
C344	1-163-237-11	s	CERAMIC, CHIP 27pF 5% 50V [For PAL]
C345	1-163-235-11	s	CERAMIC, CHIP 22pF 5% 50V[For NTSC]
C345	1-163-237-11	s	CERAMIC, CHIP 27pF 5% 50V [For PAL]

(IO-149/149A BOARD; Suffix -14)

Ref. No. or Q'ty	Part No.	SP	Description
C346	1-126-394-11	s	ELECT, CHIP 10uF 20% 16V
C347	1-126-394-11	s	ELECT, CHIP 10uF 20% 16V
C348	1-126-391-11	s	ELECT, CHIP 47uF 20% 6.3V
C349	1-163-809-11	s	CERAMIC, CHIP 0.047uF 10% 25V
C350	1-126-391-11	s	ELECT, CHIP 47uF 20% 6.3V
C351	1-163-038-91	s	CERAMIC, CHIP 0.1uF 25V
C352	1-163-037-11	s	CERAMIC, CHIP 0.022uF 10% 25V
C353	1-163-037-11	s	CERAMIC, CHIP 0.022uF 10% 25V
C354	1-163-038-91	s	CERAMIC, CHIP 0.1uF 25V
C355	1-163-227-11	s	CERAMIC, CHIP 10pF 5% 50V
C356	1-163-037-11	s	CERAMIC, CHIP 0.022uF 10% 25V
C357	1-163-037-11	s	CERAMIC, CHIP 0.022uF 10% 25V
C358	1-163-037-11	s	CERAMIC, CHIP 0.022uF 10% 25V
C359	1-163-038-91	s	CERAMIC, CHIP 0.1uF 25V
C360	1-163-038-91	s	CERAMIC, CHIP 0.1uF 25V
C361	1-163-038-91	s	CERAMIC, CHIP 0.1uF 25V
C362	1-163-243-11	s	CERAMIC, CHIP 47pF 5% 50V[For NTSC]
C362	1-163-237-11	s	CERAMIC, CHIP 27pF 5% 50V [For PAL]
C363	1-163-037-11	s	CERAMIC, CHIP 0.022uF 10% 25V
C364	1-163-037-11	s	CERAMIC, CHIP 0.022uF 10% 25V
C365	1-163-222-11	s	CERAMIC, CHIP 5pF 50V
C366	1-163-037-11	s	CERAMIC, CHIP 0.022uF 10% 25V
C367	1-163-243-11	s	CERAMIC, CHIP 47pF 5% 50V
C368	1-163-037-11	s	CERAMIC, CHIP 0.022uF 10% 25V
C369	1-163-037-11	s	CERAMIC, CHIP 0.022uF 10% 25V
C370	1-163-037-11	s	CERAMIC, CHIP 0.022uF 10% 25V
C371	1-163-037-11	s	CERAMIC, CHIP 0.022uF 10% 25V
C372	1-163-037-11	s	CERAMIC, CHIP 0.022uF 10% 25V
C373	1-126-391-11	s	ELECT, CHIP 47uF 20% 6.3V
C374	1-163-037-11	s	CERAMIC, CHIP 0.022uF 10% 25V
C375	1-163-037-11	s	CERAMIC, CHIP 0.022uF 10% 25V
C376	1-163-037-11	s	CERAMIC, CHIP 0.022uF 10% 25V
C377	1-126-391-11	s	ELECT, CHIP 47uF 20% 6.3V
C378	1-126-396-11	s	ELECT, CHIP 47uF 20% 16V
C379	1-163-037-11	s	CERAMIC, CHIP 0.022uF 10% 25V
C380	1-163-037-11	s	CERAMIC, CHIP 0.022uF 10% 25V
C381	1-163-227-11	s	CERAMIC, CHIP 10pF 5% 50V
C382	1-163-037-11	s	CERAMIC, CHIP 0.022uF 10% 25V
C383	1-163-227-11	s	CERAMIC, CHIP 10pF 5% 50V
C384	1-163-037-11	s	CERAMIC, CHIP 0.022uF 10% 25V
C385	1-163-038-91	s	CERAMIC, CHIP 0.1uF 25V
C386	1-163-038-91	s	CERAMIC, CHIP 0.1uF 25V
C387	1-163-037-11	s	CERAMIC, CHIP 0.022uF 10% 25V
C388	1-163-113-00	s	CERAMIC, CHIP 68pF 5% 50V
C501	1-163-235-11	s	CERAMIC, CHIP 22pF 5% 50V[For NTSC]
C501	1-163-239-11	s	CERAMIC, CHIP 33pF 5% 50V [For PAL]
C502	1-163-038-91	s	CERAMIC, CHIP 0.1uF 25V
C503	1-126-394-11	s	ELECT, CHIP 10uF 20% 16V
C504	1-126-394-11	s	ELECT, CHIP 10uF 20% 16V
C505	1-126-394-11	s	ELECT, CHIP 10uF 20% 16V
C506	1-163-037-11	s	CERAMIC, CHIP 0.022uF 10% 25V
C507	1-126-396-11	s	ELECT, CHIP 47uF 20% 16V
C508	1-126-396-11	s	ELECT, CHIP 47uF 20% 16V
C509	1-126-394-11	s	ELECT, CHIP 10uF 20% 16V
C510	1-126-394-11	s	ELECT, CHIP 10uF 20% 16V
C511	1-126-401-11	s	ELECT, CHIP 1uF 20% 50V
C512	1-163-235-11	s	CERAMIC, CHIP 22pF 5% 50V
C513	1-164-222-11	s	CERAMIC, CHIP 0.22uF 25V
C514	1-163-038-91	s	CERAMIC, CHIP 0.1uF 25V

(IO-149/149A BOARD; Suffix -14)

Ref. No. or Q'ty	Part No.	SP	Description
C515	1-163-038-91	s	CERAMIC, CHIP 0.1uF 25V
C516	1-163-121-00	s	CERAMIC, CHIP 150pF 5% 50V [For NTSC]
C516	1-163-259-91	s	CERAMIC, CHIP 220pF 5% 50V[For PAL]
C517	1-163-021-91	s	CERAMIC, CHIP 0.01uF 10% 50V
C518	1-163-037-11	s	CERAMIC, CHIP 0.022uF 10% 25V
C519	1-163-038-91	s	CERAMIC, CHIP 0.1uF 25V
C520	1-163-038-91	s	CERAMIC, CHIP 0.1uF 25V
C521	1-126-396-11	s	ELECT, CHIP 47uF 20% 16V
C522	1-126-393-11	s	ELECT, CHIP 33uF 20% 10V
C523	1-163-038-91	s	CERAMIC, CHIP 0.1uF 25V
C524	1-163-239-11	s	CERAMIC, CHIP 33pF 5% 50V
C525	1-163-259-91	s	CERAMIC, CHIP 220pF 5% 50V
C526	1-163-038-91	s	CERAMIC, CHIP 0.1uF 25V
C527	1-163-037-11	s	CERAMIC, CHIP 0.022uF 10% 25V
C528	1-163-038-91	s	CERAMIC, CHIP 0.1uF 25V
C529	1-163-037-11	s	CERAMIC, CHIP 0.022uF 10% 25V
C530	1-163-038-91	s	CERAMIC, CHIP 0.1uF 25V
C531	1-163-038-91	s	CERAMIC, CHIP 0.1uF 25V
C532	1-163-038-91	s	CERAMIC, CHIP 0.1uF 25V
C533	1-163-038-91	s	CERAMIC, CHIP 0.1uF 25V
C534	1-126-391-11	s	ELECT, CHIP 47uF 20% 6.3V
C535	1-163-038-91	s	CERAMIC, CHIP 0.1uF 25V
C536	1-163-038-91	s	CERAMIC, CHIP 0.1uF 25V
C537	1-163-989-11	s	CERAMIC, CHIP 0.033uF 10% 25V
C538	1-163-121-00	s	CERAMIC, CHIP 150pF 5% 50V
C539	1-163-038-91	s	CERAMIC, CHIP 0.1uF 25V
C540	1-163-038-91	s	CERAMIC, CHIP 0.1uF 25V
C541	1-163-038-91	s	CERAMIC, CHIP 0.1uF 25V
C543	1-126-391-11	s	ELECT, CHIP 47uF 20% 6.3V
C544	1-126-391-11	s	ELECT, CHIP 47uF 20% 6.3V
C545	1-163-038-91	s	CERAMIC, CHIP 0.1uF 25V
C546	1-163-239-11	s	CERAMIC, CHIP 33pF 5% 50V[For NTSC]
C546	1-163-235-11	s	CERAMIC, CHIP 22pF 5% 50V [For PAL]
C547	1-163-037-11	s	CERAMIC, CHIP 0.022uF 10% 25V
C548	1-163-038-91	s	CERAMIC, CHIP 0.1uF 25V
C549	1-126-391-11	s	ELECT, CHIP 47uF 20% 6.3V
C550	1-163-251-11	s	CERAMIC, CHIP 100pF 5% 50V
C551	1-163-037-11	s	CERAMIC, CHIP 0.022uF 10% 25V
C552	1-163-038-91	s	CERAMIC, CHIP 0.1uF 25V
C553	1-163-038-91	s	CERAMIC, CHIP 0.1uF 25V
C601	1-163-037-11	s	CERAMIC, CHIP 0.022uF 10% 25V
C602	1-163-037-11	s	CERAMIC, CHIP 0.022uF 10% 25V
C603	1-163-037-11	s	CERAMIC, CHIP 0.022uF 10% 25V
C604	1-163-275-11	s	CERAMIC, CHIP 0.001uF 5% 50V
C605	1-126-401-11	s	ELECT, CHIP 1uF 20% 50V
C606	1-126-404-11	s	ELECT, CHIP 4.7uF 20% 50V
C607	1-163-021-91	s	CERAMIC, CHIP 0.01uF 10% 50V
C608	1-163-037-11	s	CERAMIC, CHIP 0.022uF 10% 25V
C609	1-163-037-11	s	CERAMIC, CHIP 0.022uF 10% 25V
C611	1-163-037-11	s	CERAMIC, CHIP 0.022uF 10% 25V [For NTSC]
C611	1-164-004-11	s	CERAMIC, CHIP 0.1uF 10% 25V [For PAL]
C612	1-163-227-11	s	CERAMIC, CHIP 10pF 5% 50V

(IO-149/149A BOARD; Suffix -14)

Ref. No. or Q'ty	Part No.	SP	Description
C613	1-163-239-11	s	CERAMIC, CHIP 33pF 5% 50V[For NTSC]
C613	1-163-237-11	s	CERAMIC, CHIP 27pF 5% 50V [For PAL]
C614	1-163-243-11	s	CERAMIC, CHIP 47pF 5% 50V
C615	1-163-113-00	s	CERAMIC, CHIP 68pF 5% 50V
C616	1-163-021-91	s	CERAMIC, CHIP 0.01uF 10% 50V
C617	1-163-121-00	s	CERAMIC, CHIP 150pF 5% 50V
C618	1-163-021-91	s	CERAMIC, CHIP 0.01uF 10% 50V
C619	1-163-263-11	s	CERAMIC, CHIP 330pF 5% 50V
C620	1-163-809-11	s	CERAMIC, CHIP 0.047uF 10% 25V
C621	1-163-809-11	s	CERAMIC, CHIP 0.047uF 10% 25V
C622	1-163-038-91	s	CERAMIC, CHIP 0.1uF 25V
C623	1-163-038-91	s	CERAMIC, CHIP 0.1uF 25V
C624	1-163-038-91	s	CERAMIC, CHIP 0.1uF 25V
C625	1-163-037-11	s	CERAMIC, CHIP 0.022uF 10% 25V
C626	1-163-227-11	s	CERAMIC, CHIP 10pF 5% 50V
C627	1-126-391-11	s	ELECT, CHIP 47uF 20% 6.3V
C628	1-163-037-11	s	CERAMIC, CHIP 0.022uF 10% 25V
C629	1-126-391-11	s	ELECT, CHIP 47uF 20% 6.3V
C631	1-163-227-11	s	CERAMIC, CHIP 10pF 5% 50V
C632	1-126-401-11	s	ELECT, CHIP 1uF 20% 50V
C633	1-163-037-11	s	CERAMIC, CHIP 0.022uF 10% 25V
C634	1-163-243-11	s	CERAMIC, CHIP 47pF 5% 50V
C635	1-163-037-11	s	CERAMIC, CHIP 0.022uF 10% 25V
C636	1-163-037-11	s	CERAMIC, CHIP 0.022uF 10% 25V
C637	1-163-037-11	s	CERAMIC, CHIP 0.022uF 10% 25V
C638	1-163-038-91	s	CERAMIC, CHIP 0.1uF 25V
C639	1-163-235-11	s	CERAMIC, CHIP 22pF 5% 50V[For NTSC]
C639	1-163-099-00	s	CERAMIC, CHIP 18pF 5% 50V [For PAL]
C640	1-163-037-11	s	CERAMIC, CHIP 0.022uF 10% 25V
C641	1-163-038-91	s	CERAMIC, CHIP 0.1uF 25V
C642	1-163-037-11	s	CERAMIC, CHIP 0.022uF 10% 25V
C643	1-163-243-11	s	CERAMIC, CHIP 47pF 5% 50V
C644	1-163-037-11	s	CERAMIC, CHIP 0.022uF 10% 25V
C645	1-126-393-11	s	ELECT, CHIP 33uF 20% 10V
C646	1-163-037-11	s	CERAMIC, CHIP 0.022uF 10% 25V
C647	1-163-037-11	s	CERAMIC, CHIP 0.022uF 10% 25V
C648	1-163-037-11	s	CERAMIC, CHIP 0.022uF 10% 25V
C649	1-163-037-11	s	CERAMIC, CHIP 0.022uF 10% 25V
C650	1-126-393-11	s	ELECT, CHIP 33uF 20% 10V
C651	1-163-037-11	s	CERAMIC, CHIP 0.022uF 10% 25V
C652	1-163-237-11	s	CERAMIC, CHIP 27pF 5% 50V[For NTSC]
C652	1-163-239-11	s	CERAMIC, CHIP 33pF 5% 50V [For PAL]
C653	1-163-237-11	s	CERAMIC, CHIP 27pF 5% 50V[For NTSC]
C653	1-163-239-11	s	CERAMIC, CHIP 33pF 5% 50V [For PAL]
C654	1-163-245-11	s	CERAMIC, CHIP 56pF 5% 50V[For NTSC]
C654	1-163-113-00	s	CERAMIC, CHIP 68pF 5% 50V [For PAL]
C655	1-163-245-11	s	CERAMIC, CHIP 56pF 5% 50V[For NTSC]
C655	1-163-113-00	s	CERAMIC, CHIP 68pF 5% 50V [For PAL]
C656	1-163-237-11	s	CERAMIC, CHIP 27pF 5% 50V[For NTSC]
C656	1-163-239-11	s	CERAMIC, CHIP 33pF 5% 50V [For PAL]
C657	1-163-237-11	s	CERAMIC, CHIP 27pF 5% 50V[For NTSC]
C657	1-163-239-11	s	CERAMIC, CHIP 33pF 5% 50V [For PAL]
C658	1-163-037-11	s	CERAMIC, CHIP 0.022uF 10% 25V
C659	1-163-037-11	s	CERAMIC, CHIP 0.022uF 10% 25V
C660	1-163-037-11	s	CERAMIC, CHIP 0.022uF 10% 25V
C661	1-163-037-11	s	CERAMIC, CHIP 0.022uF 10% 25V
C662	1-102-110-00	s	CERAMIC 220pF 10% 50V
C663	1-163-133-00	s	CERAMIC, CHIP 470pF 5% 50V
C701	1-126-392-11	s	ELECT, CHIP 100uF 20% 6.3V

(IO-149/149A BOARD; Suffix -14)

Ref. No. or Q'ty	Part No.	SP	Description
C702	1-126-392-11	s	ELECT, CHIP 100uF 20% 6.3V
C703	1-126-392-11	s	ELECT, CHIP 100uF 20% 6.3V
C704	1-163-037-11	s	CERAMIC, CHIP 0.022uF 10% 25V
C705	1-163-037-11	s	CERAMIC, CHIP 0.022uF 10% 25V
C706	1-163-037-11	s	CERAMIC, CHIP 0.022uF 10% 25V
C707	1-163-038-91	s	CERAMIC, CHIP 0.1uF 25V
C708	1-163-038-91	s	CERAMIC, CHIP 0.1uF 25V
C709	1-126-401-11	s	ELECT, CHIP 1uF 20% 50V
C710	1-163-275-11	s	CERAMIC, CHIP 0.001uF 5% 50V
C711	1-126-392-11	s	ELECT, CHIP 100uF 20% 6.3V
C712	1-163-243-11	s	CERAMIC, CHIP 47pF 5% 50V
C713	1-163-275-11	s	CERAMIC, CHIP 0.001uF 5% 50V
C714	1-126-393-11	s	ELECT, CHIP 33uF 20% 10V
C715	1-163-037-11	s	CERAMIC, CHIP 0.022uF 10% 25V
C716	1-126-392-11	s	ELECT, CHIP 100uF 20% 6.3V
C717	1-126-392-11	s	ELECT, CHIP 100uF 20% 6.3V
C718	1-163-037-11	s	CERAMIC, CHIP 0.022uF 10% 25V
C719	1-126-396-11	s	ELECT, CHIP 47uF 20% 16V
C720	1-163-037-11	s	CERAMIC, CHIP 0.022uF 10% 25V
C721	1-126-392-11	s	ELECT, CHIP 100uF 20% 6.3V
C722	1-163-275-11	s	CERAMIC, CHIP 0.001uF 5% 50V [For NTSC]
C723	1-163-038-91	s	CERAMIC, CHIP 0.1uF 25V
C724	1-126-396-11	s	ELECT, CHIP 47uF 20% 16V
C725	1-126-396-11	s	ELECT, CHIP 47uF 20% 16V
C726	1-163-251-11	s	CERAMIC, CHIP 100pF 5% 50V
C727	1-126-396-11	s	ELECT, CHIP 47uF 20% 16V
C728	1-126-396-11	s	ELECT, CHIP 47uF 20% 16V
C729	1-163-251-11	s	CERAMIC, CHIP 100pF 5% 50V
C730	1-126-392-11	s	ELECT, CHIP 100uF 20% 6.3V
C731	1-163-037-11	s	CERAMIC, CHIP 0.022uF 10% 25V
C732	1-126-392-11	s	ELECT, CHIP 100uF 20% 6.3V
C733	1-163-037-11	s	CERAMIC, CHIP 0.022uF 10% 25V
C735	1-126-401-11	s	ELECT, CHIP 1uF 20% 50V
C736	1-163-037-11	s	CERAMIC, CHIP 0.022uF 10% 25V
C737	1-163-037-11	s	CERAMIC, CHIP 0.022uF 10% 25V
C739	1-163-037-11	s	CERAMIC, CHIP 0.022uF 10% 25V
C742	1-126-396-11	s	ELECT, CHIP 47uF 20% 16V
C745	1-126-392-11	s	ELECT, CHIP 100uF 20% 6.3V
C746	1-126-392-11	s	ELECT, CHIP 100uF 20% 6.3V
C748	1-163-037-11	s	CERAMIC, CHIP 0.022uF 10% 25V
C749	1-163-037-11	s	CERAMIC, CHIP 0.022uF 10% 25V
C750	1-126-391-11	s	ELECT, CHIP 47uF 20% 6.3V
C751	1-126-391-11	s	ELECT, CHIP 47uF 20% 6.3V
C753	1-126-394-11	s	ELECT, CHIP 10uF 20% 16V
C755	1-163-037-11	s	CERAMIC, CHIP 0.022uF 10% 25V
C901	1-163-038-91	s	CERAMIC, CHIP 0.1uF 25V
C902	1-126-392-11	s	ELECT, CHIP 100uF 20% 6.3V
C903	1-163-239-11	s	CERAMIC, CHIP 33pF 5% 50V
C904	1-163-037-11	s	CERAMIC, CHIP 0.022uF 10% 25V
C905	1-163-037-11	s	CERAMIC, CHIP 0.022uF 10% 25V
C906	1-163-037-11	s	CERAMIC, CHIP 0.022uF 10% 25V
C907	1-163-037-11	s	CERAMIC, CHIP 0.022uF 10% 25V
C908	1-163-037-11	s	CERAMIC, CHIP 0.022uF 10% 25V
C909	1-163-037-11	s	CERAMIC, CHIP 0.022uF 10% 25V
C911	1-163-037-11	s	CERAMIC, CHIP 0.022uF 10% 25V
C914	1-163-037-11	s	CERAMIC, CHIP 0.022uF 10% 25V

(IO-149/149A BOARD; Suffix -14)

Ref. No. or Q'ty	Part No.	SP	Description
C915	1-163-037-11	s	CERAMIC, CHIP 0.022uF 10% 25V
C916	1-126-392-11	s	ELECT, CHIP 100uF 20% 6.3V
C917	1-163-037-11	s	CERAMIC, CHIP 0.022uF 10% 25V
C918	1-163-037-11	s	CERAMIC, CHIP 0.022uF 10% 25V
C919	1-163-037-11	s	CERAMIC, CHIP 0.022uF 10% 25V
C920	1-163-037-11	s	CERAMIC, CHIP 0.022uF 10% 25V
C921	1-163-037-11	s	CERAMIC, CHIP 0.022uF 10% 25V
C922	1-126-392-11	s	ELECT, CHIP 100uF 20% 6.3V
C923	1-163-038-91	s	CERAMIC, CHIP 0.1uF 25V
C924	1-163-038-91	s	CERAMIC, CHIP 0.1uF 25V
C925	1-163-037-11	s	CERAMIC, CHIP 0.022uF 10% 25V
C926	1-163-037-11	s	CERAMIC, CHIP 0.022uF 10% 25V
C927	1-163-038-91	s	CERAMIC, CHIP 0.1uF 25V
C928	1-163-037-11	s	CERAMIC, CHIP 0.022uF 10% 25V
C929	1-163-038-91	s	CERAMIC, CHIP 0.1uF 25V
C930	1-163-037-11	s	CERAMIC, CHIP 0.022uF 10% 25V
C931	1-163-037-11	s	CERAMIC, CHIP 0.022uF 10% 25V
C932	1-163-037-11	s	CERAMIC, CHIP 0.022uF 10% 25V
C933	1-163-251-11	s	CERAMIC, CHIP 100pF 5% 50V
C934	1-163-251-11	s	CERAMIC, CHIP 100pF 5% 50V
C935	1-126-392-11	s	ELECT, CHIP 100uF 20% 6.3V
C936	1-126-392-11	s	ELECT, CHIP 100uF 20% 6.3V
C937	1-163-251-11	s	CERAMIC, CHIP 100pF 5% 50V
C938	1-163-037-11	s	CERAMIC, CHIP 0.022uF 10% 25V
C939	1-163-037-11	s	CERAMIC, CHIP 0.022uF 10% 25V
C940	1-126-396-11	s	ELECT, CHIP 47uF 20% 16V
C941	1-163-037-11	s	CERAMIC, CHIP 0.022uF 10% 25V
C942	1-126-392-11	s	ELECT, CHIP 100uF 20% 6.3V
C943	1-163-239-11	s	CERAMIC, CHIP 33pF 5% 50V[For NTSC]
C943	1-163-099-00	s	CERAMIC, CHIP 18pF 5% 50V [For PAL]
C945	1-163-037-11	s	CERAMIC, CHIP 0.022uF 10% 25V
C946	1-163-037-11	s	CERAMIC, CHIP 0.022uF 10% 25V
C947	1-126-392-11	s	ELECT, CHIP 100uF 20% 6.3V
C948	1-163-239-11	s	CERAMIC, CHIP 33pF 5% 50V
C949	1-126-392-11	s	ELECT, CHIP 100uF 20% 6.3V
C950	1-163-037-11	s	CERAMIC, CHIP 0.022uF 10% 25V
C951	1-163-239-11	s	CERAMIC, CHIP 33pF 5% 50V
C952	1-163-037-11	s	CERAMIC, CHIP 0.022uF 10% 25V
C953	1-163-239-11	s	CERAMIC, CHIP 33pF 5% 50V[For NTSC]
C953	1-163-099-00	s	CERAMIC, CHIP 18pF 5% 50V [For PAL]
C955	1-163-239-11	s	CERAMIC, CHIP 33pF 5% 50V
C956	1-163-037-11	s	CERAMIC, CHIP 0.022uF 10% 25V
C957	1-163-037-11	s	CERAMIC, CHIP 0.022uF 10% 25V
C961	1-126-392-11	s	ELECT, CHIP 100uF 20% 6.3V
C962	1-163-037-11	s	CERAMIC, CHIP 0.022uF 10% 25V
C965	1-126-392-11	s	ELECT, CHIP 100uF 20% 6.3V
C966	1-126-392-11	s	ELECT, CHIP 100uF 20% 6.3V
C967	1-163-037-11	s	CERAMIC, CHIP 0.022uF 10% 25V
C968	1-163-037-11	s	CERAMIC, CHIP 0.022uF 10% 25V
C969	1-126-392-11	s	ELECT, CHIP 100uF 20% 6.3V
C970	1-163-037-11	s	CERAMIC, CHIP 0.022uF 10% 25V
C971	1-163-037-11	s	CERAMIC, CHIP 0.022uF 10% 25V
C972	1-163-037-11	s	CERAMIC, CHIP 0.022uF 10% 25V
C973	1-163-037-11	s	CERAMIC, CHIP 0.022uF 10% 25V
C980	1-163-037-11	s	CERAMIC, CHIP 0.022uF 10% 25V
C981	1-163-275-11	s	CERAMIC, CHIP 0.001uF 5% 50V
C982	1-163-038-91	s	CERAMIC, CHIP 0.1uF 25V
C983	1-163-038-91	s	CERAMIC, CHIP 0.1uF 25V
C984	1-163-809-11	s	CERAMIC, CHIP 0.047uF 10% 25V

(IO-149/149A BOARD; Suffix -14)

Ref. No. or Q'ty	Part No.	SP	Description
C987	1-163-227-11	s	CERAMIC, CHIP 10pF 5% 50V
C1001	1-126-393-11	s	ELECT, CHIP 33uF 20% 10V
C1002	1-163-038-91	s	CERAMIC, CHIP 0.1uF 25V
C1003	1-163-037-11	s	CERAMIC, CHIP 0.022uF 10% 25V
C1004	1-163-037-11	s	CERAMIC, CHIP 0.022uF 10% 25V
C1005	1-126-393-11	s	ELECT, CHIP 33uF 20% 10V
C1006	1-163-249-11	s	CERAMIC, CHIP 82pF 5% 50V
C1007	1-163-037-11	s	CERAMIC, CHIP 0.022uF 10% 25V
C1008	1-163-037-11	s	CERAMIC, CHIP 0.022uF 10% 25V
C1009	1-163-037-11	s	CERAMIC, CHIP 0.022uF 10% 25V
C1010	1-163-235-11	s	CERAMIC, CHIP 22pF 5% 50V
C1011	1-163-243-11	s	CERAMIC, CHIP 47pF 5% 50V[For NTSC]
C1011	1-163-235-11	s	CERAMIC, CHIP 22pF 5% 50V [For PAL]
C1012	1-126-393-11	s	ELECT, CHIP 33uF 20% 10V
C1013	1-163-038-91	s	CERAMIC, CHIP 0.1uF 25V
C1014	1-163-038-91	s	CERAMIC, CHIP 0.1uF 25V
C1015	1-163-037-11	s	CERAMIC, CHIP 0.022uF 10% 25V
C1016	1-163-263-11	s	CERAMIC, CHIP 330pF 5% 50V [For NTSC]
C1016	1-163-259-91	s	CERAMIC, CHIP 220pF 5% 50V[For PAL]
C1017	1-163-037-11	s	CERAMIC, CHIP 0.022uF 10% 25V
C1018	1-163-037-11	s	CERAMIC, CHIP 0.022uF 10% 25V
C1019	1-163-037-11	s	CERAMIC, CHIP 0.022uF 10% 25V
C1020	1-163-038-91	s	CERAMIC, CHIP 0.1uF 25V
C1021	1-163-038-91	s	CERAMIC, CHIP 0.1uF 25V
C1022	1-126-390-11	s	ELECT, CHIP 22uF 20% 6.3V
C1023	1-126-390-11	s	ELECT, CHIP 22uF 20% 6.3V
C1024	1-163-037-11	s	CERAMIC, CHIP 0.022uF 10% 25V
C1025	1-163-239-11	s	CERAMIC, CHIP 33pF 5% 50V
C1026	1-163-017-00	s	CERAMIC, CHIP 0.0047uF 5% 50V
C1027	1-163-017-00	s	CERAMIC, CHIP 0.0047uF 5% 50V
C1028	1-163-121-00	s	CERAMIC, CHIP 150pF 5% 50V
C1029	1-163-038-91	s	CERAMIC, CHIP 0.1uF 25V
C1030	1-163-038-91	s	CERAMIC, CHIP 0.1uF 25V
C1031	1-126-391-11	s	ELECT, CHIP 47uF 20% 6.3V
C1032	1-163-037-11	s	CERAMIC, CHIP 0.022uF 10% 25V
C1033	1-163-037-11	s	CERAMIC, CHIP 0.022uF 10% 25V
C1034	1-163-037-11	s	CERAMIC, CHIP 0.022uF 10% 25V
C1035	1-163-037-11	s	CERAMIC, CHIP 0.022uF 10% 25V
C1036	1-163-133-00	s	CERAMIC, CHIP 470pF 5% 50V
C1037	1-126-390-11	s	ELECT, CHIP 22uF 20% 6.3V
C1038	1-163-037-11	s	CERAMIC, CHIP 0.022uF 10% 25V
C1039	1-163-037-11	s	CERAMIC, CHIP 0.022uF 10% 25V
C1040	1-163-037-11	s	CERAMIC, CHIP 0.022uF 10% 25V
C1041	1-163-121-00	s	CERAMIC, CHIP 150pF 5% 50V
C1042	1-163-037-11	s	CERAMIC, CHIP 0.022uF 10% 25V
C1043	1-163-038-91	s	CERAMIC, CHIP 0.1uF 25V
C1044	1-163-037-11	s	CERAMIC, CHIP 0.022uF 10% 25V
C1045	1-163-235-11	s	CERAMIC, CHIP 22pF 5% 50V
C1046	1-163-239-11	s	CERAMIC, CHIP 33pF 5% 50V
C1047	1-126-390-11	s	ELECT, CHIP 22uF 20% 6.3V
C1048	1-163-121-00	s	CERAMIC, CHIP 150pF 5% 50V
C1049	1-163-102-00	s	CERAMIC, CHIP 24pF 5% 50V
C1050	1-126-390-11	s	ELECT, CHIP 22uF 20% 6.3V
C1051	1-163-038-91	s	CERAMIC, CHIP 0.1uF 25V
C1052	1-163-037-11	s	CERAMIC, CHIP 0.022uF 10% 25V
C1053	1-163-038-91	s	CERAMIC, CHIP 0.1uF 25V
C1054	1-163-241-11	s	CERAMIC, CHIP 39pF 5% 50V

(IO-149/149A BOARD; Suffix -14)

Ref. No. or Q'ty	Part No.	SP	Description	
C1055	1-163-251-11	s	CERAMIC, CHIP 100pF 5% 50V	
C1056	1-163-263-11	s	CERAMIC, CHIP 330pF 5% 50V	
C1057	1-163-021-91	s	CERAMIC 0.01uF 10% 50V	
C1058	1-163-037-11	s	CERAMIC, CHIP 0.022uF 10% 25V	
C1059	1-163-263-11	s	CERAMIC, CHIP 330pF 5% 50V	
C1060	1-126-390-11	s	ELECT, CHIP 22uF 20% 6.3V	
C1061	1-163-038-91	s	CERAMIC, CHIP 0.1uF 25V	
C1062	1-163-037-11	s	CERAMIC, CHIP 0.022uF 10% 25V	
C1063	1-126-390-11	s	ELECT, CHIP 22uF 20% 6.3V	
C1064	1-163-017-00	s	CERAMIC, CHIP 0.0047uF 5% 50V	
C1065	1-126-390-11	s	ELECT, CHIP 22uF 20% 6.3V	
C1066	1-163-037-11	s	CERAMIC, CHIP 0.022uF 10% 25V	
C1067	1-163-037-11	s	CERAMIC, CHIP 0.022uF 10% 25V	
C1068	1-163-037-11	s	CERAMIC, CHIP 0.022uF 10% 25V	
C1069	1-126-396-11	s	ELECT, CHIP 47uF 20% 16V	
C1070	1-163-133-00	s	CERAMIC, CHIP 470pF 5% 50V	[For NTSC]
C1070	1-163-131-00	s	CERAMIC, CHIP 390pF 5% 50V	[For PAL]
C1071	1-163-235-11	s	CERAMIC, CHIP 22pF 5% 50V	
C1072	1-126-394-11	s	ELECT, CHIP 10uF 20% 16V	
C1073	1-163-037-11	s	CERAMIC, CHIP 0.022uF 10% 25V	
C1074	1-163-038-91	s	CERAMIC, CHIP 0.1uF 25V	
C1075	1-126-401-11	s	ELECT, CHIP 1uF 20% 50V	
C1076	1-163-037-11	s	CERAMIC, CHIP 0.022uF 10% 25V	
C1078	1-163-038-91	s	CERAMIC, CHIP 0.1uF 25V	
C1079	1-163-021-91	s	CERAMIC 0.01uF 10% 50V	
C1080	1-163-038-91	s	CERAMIC, CHIP 0.1uF 25V	
C1081	1-163-139-00	s	CERAMIC, CHIP 820pF 5% 50V	
C1082	1-163-259-91	s	CERAMIC, CHIP 220pF 5% 50V	
C1083	1-163-037-11	s	CERAMIC, CHIP 0.022uF 10% 25V	
C1084	1-163-021-91	s	CERAMIC 0.01uF 10% 50V	
C1085	1-126-391-11	s	ELECT, CHIP 47uF 20% 6.3V	
C1086	1-126-391-11	s	ELECT, CHIP 47uF 20% 6.3V	
C1087	1-126-391-11	s	ELECT, CHIP 47uF 20% 6.3V	
C1088	1-163-038-91	s	CERAMIC, CHIP 0.1uF 25V	
C1089	1-163-038-91	s	CERAMIC, CHIP 0.1uF 25V	
C1090	1-163-275-11	s	CERAMIC, CHIP 0.001uF 5% 50V	
C1091	1-164-222-11	s	CERAMIC 0.22uF 25V	
C1092	1-164-222-11	s	CERAMIC 0.22uF 25V	
C1093	1-164-222-11	s	CERAMIC 0.22uF 25V	
C1094	1-164-222-11	s	CERAMIC 0.22uF 25V	
C1095	1-163-038-91	s	CERAMIC, CHIP 0.1uF 25V	
C1096	1-163-038-91	s	CERAMIC, CHIP 0.1uF 25V	
C1097	1-163-038-91	s	CERAMIC, CHIP 0.1uF 25V	
C1098	1-163-038-91	s	CERAMIC, CHIP 0.1uF 25V	
C1099	1-163-038-91	s	CERAMIC, CHIP 0.1uF 25V	
C1100	1-163-259-91	s	CERAMIC, CHIP 220pF 5% 50V	
C1101	1-163-259-91	s	CERAMIC, CHIP 220pF 5% 50V	
CT601	1-141-345-11	s	CAP, TRIMMER, CHIP 40pF	
CT602	1-141-345-11	s	CAP, TRIMMER, CHIP 40pF	
CT1001	1-141-322-11	s	CAP, TRIMMER, CHIP 20pF	
D1	8-719-941-04	s	DIODE SB007-03CP	
D2	8-719-941-04	s	DIODE SB007-03CP	
D3	8-719-053-18	s	DIODE 1SR154-400TE-25	
D4	8-719-053-18	s	DIODE 1SR154-400TE-25	
D5	8-719-053-18	s	DIODE 1SR154-400TE-25	

(IO-149/149A BOARD; Suffix -14)

Ref. No. or Q'ty	Part No.	SP	Description	
D101	8-719-041-39	s	DIODE KV1470	
D102	8-719-041-39	s	DIODE KV1470	
D103	8-719-041-39	s	DIODE KV1470	
D104	8-719-941-23	s	DIODE DA204U	
D105	8-719-941-23	s	DIODE DA204U	
D106	8-719-989-08	s	DIODE RB717F	
D301	8-719-976-99	s	DIODE DTZ5.1B	
D302	8-719-941-23	s	DIODE DA204U	
D501	8-719-941-23	s	DIODE DA204U	
D601	8-719-002-81	s	DIODE 1T363	
D602	8-719-002-81	s	DIODE 1T363	
D701	8-719-941-23	s	DIODE DA204U	[For NTSC]
D702	8-719-056-74	s	DIODE UDZ-TE-17-3.0B	
D703	8-719-024-81	s	DIODE 1SS300-TE85L	
D901	8-719-941-04	s	DIODE SB007-03CP	
D902	8-719-024-81	s	DIODE 1SS300-TE85L	
D904	8-719-941-23	s	DIODE DA204U	
D905	8-719-941-23	s	DIODE DA204U	
D906	8-719-941-23	s	DIODE DA204U	
D1001	8-719-041-39	s	DIODE KV1470	
D1002	8-719-941-23	s	DIODE DA204U	[For PAL]
D1003	8-719-941-23	s	DIODE DA204U	[For PAL]
D1004	8-719-002-81	s	DIODE 1T363	
D1005	8-719-941-23	s	DIODE DA204U	
D1006	8-719-941-23	s	DIODE DA204U	
D1007	8-719-941-23	s	DIODE DA204U	[For PAL]
D1008	8-719-024-81	s	DIODE 1SS300-TE85L	
D1009	8-719-024-81	s	DIODE 1SS300-TE85L	
F1	⚠ 1-576-124-11	s	LINK, IC, CHIP 1A	
F2	⚠ 1-533-282-21	s	LINK, IC, CHIP 2A	
F3	⚠ 1-576-124-11	s	LINK, IC, CHIP 1A	
F4	⚠ 1-533-282-21	s	LINK, IC, CHIP 2A	
F5	⚠ 1-576-124-11	s	LINK, IC, CHIP 1A	
F6	⚠ 1-533-282-21	s	LINK, IC, CHIP 2A	
FB800	1-543-309-21	s	BEAD, FERRITE	
FL101	1-233-598-11	s	FILTER, LOW-PASS	[For NTSC]
FL101	1-233-599-11	s	FILTER, LOW-PASS	[For PAL]
FL102	1-233-598-11	s	FILTER, LOW-PASS	[For NTSC]
FL102	1-233-599-11	s	FILTER, LOW-PASS	[For PAL]
FL103	1-233-614-11	s	FILTER, LOW-PASS	
FL104	1-239-771-11	s	FILTER, LOW-PASS	
FL701	1-233-614-11	s	FILTER, LOW-PASS	
FL901	1-233-614-11	s	FILTER, LOW-PASS	
FL902	1-233-598-11	s	FILTER, LOW-PASS	[For NTSC]
FL902	1-233-599-11	s	FILTER, LOW-PASS	[For PAL]
FL903	1-233-598-11	s	FILTER, LOW-PASS	[For NTSC]
FL903	1-233-599-11	s	FILTER, LOW-PASS	[For PAL]
FL1001	1-239-719-11	s	FILTER, NOISE, CHIP	
FL1002	1-239-719-11	s	FILTER, NOISE, CHIP	
FL1003	1-239-719-11	s	FILTER, NOISE, CHIP	
IC1	8-759-157-17	s	IC PQ05SZ1U	
IC2	8-759-157-17	s	IC PQ05SZ1U	
IC3	8-759-172-41	s	IC L78M09T-TL	
IC4	8-759-172-41	s	IC L78M09T-TL	
IC5	8-759-822-95	s	IC L79M05T-FA	
IC6	8-759-822-95	s	IC L79M05T-FA	
IC7	8-759-822-95	s	IC L79M05T-FA	

(IO-149/149A BOARD; Suffix -14)

Ref. No. or Q'ty	Part No.	SP	Description	
IC8	8-759-157-17	s	IC PQ05SZ1U	
IC101	8-759-198-63	s	IC S-81230SG-QB-T1	
IC102	8-759-278-58	s	IC NJM4558V-TE2	
IC103	8-759-278-58	s	IC NJM4558V-TE2	
IC105	8-759-278-58	s	IC NJM4558V-TE2	
IC106	8-759-082-61	s	IC TC4W53FU	[For NTSC]
IC107	8-759-076-06	s	IC TL064CPW	
IC108	8-759-076-06	s	IC TL064CPW	
IC109	8-752-052-77	s	IC CXA1450M	
IC110	8-752-363-60	s	IC CXD2307R-T4	
IC111	8-759-287-54	s	IC TL084CPW-E20	
IC112	8-759-287-54	s	IC TL084CPW-E20	
IC113	8-759-287-54	s	IC TL084CPW-E20	
IC114	8-759-066-59	s	IC TC74HC4053AFS	
IC115	8-752-054-80	s	IC CXA1521M	
IC116	8-752-054-80	s	IC CXA1521M	
IC117	8-759-906-59	s	IC CX22017	
IC118	8-759-907-81	s	IC SN74LS221NS	
IC301	8-759-082-59	s	IC TC7W32FU	
IC302	8-759-082-61	s	IC TC4W53FU	
IC304	8-759-287-54	s	IC TL084CPW-E20	
IC305	8-759-082-61	s	IC TC4W53FU	
IC306	8-752-052-73	s	IC CXA1451M	
IC307	8-752-052-73	s	IC CXA1451M	
IC308	8-759-262-00	s	IC MC14576CF	
IC309	8-752-052-73	s	IC CXA1451M	
IC310	8-752-052-73	s	IC CXA1451M	
IC311	8-752-052-73	s	IC CXA1451M	
IC312	8-759-082-61	s	IC TC4W53FU	
IC501	8-759-082-57	s	IC TC7W04FU	
IC502	8-752-052-77	s	IC CXA1450M	
IC503	8-752-052-77	s	IC CXA1450M	
IC504	8-759-173-16	s	IC TL062CPW	
IC505	8-759-076-06	s	IC TL064CPW	
IC506	8-759-430-88	s	IC TC74HC4051AFS(EL)	
IC507	8-759-324-03	s	IC HA17431UA-TL	
IC508	8-759-076-06	s	IC TL064CPW	
IC509	8-752-052-77	s	IC CXA1450M	
IC510	8-759-262-03	s	IC MC14577CF	
IC512	8-759-987-27	s	IC LM1881M	
IC513	8-759-523-97	s	IC TC74VHC123AFT(EL)	
IC514	8-759-980-04	s	IC LM311PS	
IC515	8-759-702-08	s	IC NJM360M	
IC516	8-752-052-77	s	IC CXA1450M	
IC601	8-759-082-57	s	IC TC7W04FU	
IC602	8-759-459-26	s	IC TC5081BP	
IC603	8-759-524-04	s	IC TC74VHC125FT(EL)	
IC604	8-759-058-58	s	IC TC7S04FU(TE85R)	
IC605	8-759-357-24	s	IC MC68HC705C8AFU	
IC606	8-752-335-47	s	IC CXD1216M	
IC607	8-759-066-59	s	IC TC74HC4053AFS	
IC608	8-759-241-03	s	IC TC74HC191AF	
IC609	8-759-082-57	s	IC TC7W04FU	
IC610	8-759-271-86	s	IC TC7SH04FU	
IC611	8-759-271-86	s	IC TC7SH04FU	
IC612	8-759-523-97	s	IC TC74VHC123AFT(EL)	
IC613	8-759-524-22	s	IC TC74VHC175FT(EL)	
IC614	8-759-526-00	s	IC CXD8165AQ	
IC615	8-752-339-46	s	IC CXD1177Q	

(IO-149/149A BOARD; Suffix -14)

Ref. No. or Q'ty	Part No.	SP	Description	
IC616	8-759-082-57	s	IC TC7W04FU	
IC617	8-759-066-59	s	IC TC74HC4053AFS	
IC618	8-759-271-86	s	IC TC7SH04FU	
IC619	8-759-271-86	s	IC TC7SH04FU	
IC701	8-759-524-08	s	IC TC74VHC139FT(EL)	
IC702	8-759-523-78	s	IC TC74VHC00FT(EL)	
IC703	8-759-514-57	s	IC BA7046F	
IC704	8-759-987-27	s	IC LM1881M	
IC705	8-759-710-12	s	IC NJM2230M	
IC706	8-759-035-90	s	IC SC7S02FEL	
IC707	8-759-066-59	s	IC TC74HC4053AFS	
IC709	8-759-066-59	s	IC TC74HC4053AFS	
IC712	8-759-173-16	s	IC TL062CPW	
IC901	8-759-387-83	s	IC MB40569PFV-ER	
IC902	8-759-277-19	s	IC UPD485505G-35-E2	
IC903	8-759-277-19	s	IC UPD485505G-35-E2	
IC904	8-759-277-19	s	IC UPD485505G-35-E2	
IC905	8-759-513-76	s	IC CXD8161AQ	
IC906	8-759-058-64	s	IC TC7S32FU(TE85R)	
IC907	8-759-082-57	s	IC TC7W04FU	
IC908	8-752-363-60	s	IC CXD2307R-T4	
IC909	8-759-173-16	s	IC TL062CPW	
IC910	8-752-052-73	s	IC CXA1451M	
IC911	8-752-052-73	s	IC CXA1451M	
IC912	8-752-052-73	s	IC CXA1451M	
IC913	8-759-523-01	s	IC TC74HC4052AFT(EL)	
IC915	8-759-530-05	s	IC TC4053BFT(EL,N)	[For NTSC]
IC916	8-759-262-00	s	IC MC14576CF	
IC917	8-759-058-64	s	IC TC7S32FU(TE85R)	
IC918	8-759-287-54	s	IC TL084CPW-E20	
IC919	8-759-082-61	s	IC TC4W53FU	
IC1001	8-759-058-58	s	IC TC7S04FU(TE85R)	
IC1002	8-759-184-64	s	IC TC4W66FU(TE12R)	
IC1003	8-752-339-04	s	IC CXD2208Q	
IC1004	8-759-076-06	s	IC TL064CPW	
IC1005	8-759-076-06	s	IC TL064CPW	
IC1006	8-759-173-16	s	IC TL062CPW	
IC1007	8-759-058-58	s	IC TC7S04FU(TE85R)	
IC1008	8-759-082-60	s	IC TC7S66FU	
IC1009	8-759-520-55	s	IC CXD8243AM	
IC1010	8-759-491-46	s	IC TC74VHCT04FT(EL)	
IC1011	8-759-184-64	s	IC TC4W66FU(TE12R)	
IC1012	8-759-066-59	s	IC TC74HC4053AFS	
IC1013	8-759-523-97	s	IC TC74VHC123AFT(EL)	
IC1014	8-759-987-27	s	IC LM1881M	
IC1015	8-759-907-81	s	IC SN74LS221NS	
IC1016	8-759-324-03	s	IC HA17431UA-TL	
IC1017	8-759-524-19	s	IC TC74VHC164FT(EL)	
IC1018	8-759-324-03	s	IC HA17431UA-TL	
IC1019	8-759-523-95	s	IC TC74VHC74FT(EL)	
IC1020	8-759-523-97	s	IC TC74VHC123AFT(EL)	
IC1021	8-759-907-81	s	IC SN74LS221NS	
IC1022	8-759-058-64	s	IC TC7S32FU(TE85R)	
IC1023	8-759-523-95	s	IC TC74VHC74FT(EL)	
IC1024	8-759-066-59	s	IC TC74HC4053AFS	
IC1025	8-759-523-78	s	IC TC74VHC00FT(EL)	
IC1026	8-759-082-61	s	IC TC4W53FU	
L101	1-414-402-11	s	INDUCTOR, CHIP 47uH	

(IO-149/149A BOARD; Suffix -14)

Ref. No. or Q'ty	Part No.	SP	Description	
L102	1-414-400-11	s	INDUCTOR, CHIP 22uH	
L103	1-414-400-11	s	INDUCTOR, CHIP 22uH	
L104	1-414-402-11	s	INDUCTOR, CHIP 47uH	
L105	1-414-402-11	s	INDUCTOR, CHIP 47uH	
L106	1-414-400-11	s	INDUCTOR, CHIP 22uH	
L107	1-414-400-11	s	INDUCTOR, CHIP 22uH	
L108	1-414-402-11	s	INDUCTOR, CHIP 47uH	
L109	1-414-402-11	s	INDUCTOR, CHIP 47uH	
L110	1-414-402-11	s	INDUCTOR, CHIP 47uH	
L111	1-414-402-11	s	INDUCTOR, CHIP 47uH	
L112	1-414-404-11	s	INDUCTOR, CHIP 100uH	
L113	1-414-402-11	s	INDUCTOR, CHIP 47uH	
L114	1-414-404-11	s	INDUCTOR, CHIP 100uH	
L115	1-410-385-11	s	INDUCTOR, CHIP 22uH	
L116	1-410-385-11	s	INDUCTOR, CHIP 22uH	[For PAL]
L117	1-410-393-11	s	INDUCTOR, CHIP 100uH	
L301	1-414-402-11	s	INDUCTOR, CHIP 47uH	
L302	1-414-402-11	s	INDUCTOR, CHIP 47uH	
L303	1-414-402-11	s	INDUCTOR, CHIP 47uH	
L304	1-414-402-11	s	INDUCTOR, CHIP 47uH	
L305	1-410-391-11	s	INDUCTOR, CHIP 68uH	[For NTSC]
L305	1-410-393-11	s	INDUCTOR, CHIP 100uH	[For PAL]
L306	1-410-391-11	s	INDUCTOR, CHIP 68uH	[For NTSC]
L306	1-410-393-11	s	INDUCTOR, CHIP 100uH	[For PAL]
L307	1-414-402-11	s	INDUCTOR, CHIP 47uH	
L308	1-414-402-11	s	INDUCTOR, CHIP 47uH	
L309	1-414-402-11	s	INDUCTOR, CHIP 47uH	
L310	1-410-387-11	s	INDUCTOR, CHIP 33uH	
L311	1-410-387-11	s	INDUCTOR, CHIP 33uH	
L312	1-414-402-11	s	INDUCTOR, CHIP 47uH	
L313	1-414-402-11	s	INDUCTOR, CHIP 47uH	
L314	1-410-389-31	s	INDUCTOR, CHIP 47uH	
L315	1-410-387-11	s	INDUCTOR, CHIP 33uH	
L501	1-410-390-11	s	INDUCTOR, CHIP 56uH	[For NTSC]
L501	1-410-392-11	s	INDUCTOR, CHIP 82uH	[For PAL]
L502	1-410-393-11	s	INDUCTOR, CHIP 100uH	
L503	1-414-402-11	s	INDUCTOR, CHIP 47uH	
L504	1-414-402-11	s	INDUCTOR, CHIP 47uH	
L505	1-410-391-11	s	INDUCTOR, CHIP 68uH	
L506	1-414-402-11	s	INDUCTOR, CHIP 47uH	
L507	1-414-402-11	s	INDUCTOR, CHIP 47uH	
L601	1-414-402-11	s	INDUCTOR, CHIP 47uH	
L602	1-414-402-11	s	INDUCTOR, CHIP 47uH	
L603	1-414-400-11	s	INDUCTOR, CHIP 22uH	
L604	1-414-400-11	s	INDUCTOR, CHIP 22uH	
L605	1-410-389-31	s	INDUCTOR, CHIP 47uH	[For NTSC]
L605	1-410-386-11	s	INDUCTOR, CHIP 27uH	[For PAL]
L606	1-410-389-31	s	INDUCTOR, CHIP 47uH	[For NTSC]
L606	1-410-386-11	s	INDUCTOR, CHIP 27uH	[For PAL]
L607	1-410-389-31	s	INDUCTOR, CHIP 47uH	[For NTSC]
L607	1-410-386-11	s	INDUCTOR, CHIP 27uH	[For PAL]
L608	1-410-389-31	s	INDUCTOR, CHIP 47uH	[For NTSC]
L608	1-410-386-11	s	INDUCTOR, CHIP 27uH	[For PAL]
L701	1-414-400-11	s	INDUCTOR, CHIP 22uH	
L702	1-414-400-11	s	INDUCTOR, CHIP 22uH	
L703	1-414-402-11	s	INDUCTOR, CHIP 47uH	
L704	1-414-402-11	s	INDUCTOR, CHIP 47uH	
L901	1-414-400-11	s	INDUCTOR, CHIP 22uH	
L902	1-414-400-11	s	INDUCTOR, CHIP 22uH	

(IO-149/149A BOARD; Suffix -14)

Ref. No. or Q'ty	Part No.	SP	Description	
L903	1-410-373-31	s	INDUCTOR, CHIP 2.2uH	[For NTSC]
L903	1-410-372-21	s	INDUCTOR, CHIP 1.8uH	[For PAL]
L904	1-410-373-31	s	INDUCTOR, CHIP 2.2uH	
L905	1-414-402-11	s	INDUCTOR, CHIP 47uH	
L906	1-410-373-31	s	INDUCTOR, CHIP 2.2uH	[For NTSC]
L906	1-410-372-21	s	INDUCTOR, CHIP 1.8uH	[For PAL]
L907	1-414-402-11	s	INDUCTOR, CHIP 47uH	
L908	1-414-402-11	s	INDUCTOR, CHIP 47uH	
L909	1-414-400-11	s	INDUCTOR, CHIP 22uH	
L910	1-414-400-11	s	INDUCTOR, CHIP 22uH	
L1001	1-414-402-11	s	INDUCTOR, CHIP 47uH	
L1002	1-410-387-11	s	INDUCTOR, CHIP 33uH	
L1003	1-410-375-11	s	INDUCTOR, CHIP 3.3uH	
L1004	1-410-389-31	s	INDUCTOR, CHIP 47uH	[For NTSC]
L1004	1-410-387-11	s	INDUCTOR, CHIP 33uH	[For PAL]
L1005	1-410-378-11	s	INDUCTOR, CHIP 5.6uH	
L1006	1-414-404-11	s	INDUCTOR, CHIP 100uH	
L1007	1-414-402-11	s	INDUCTOR, CHIP 47uH	
L1008	1-410-393-11	s	INDUCTOR, CHIP 100uH	
L1009	1-410-393-11	s	INDUCTOR, CHIP 100uH	
L1010	1-410-393-11	s	INDUCTOR, CHIP 100uH	
L1011	1-414-404-11	s	INDUCTOR, CHIP 100uH	
L1012	1-410-393-11	s	INDUCTOR, CHIP 100uH	
L1013	1-414-404-11	s	INDUCTOR, CHIP 100uH	
Q101	8-729-117-32	s	TRANSISTOR 2SC4177	
Q102	8-729-117-32	s	TRANSISTOR 2SC4177	
Q103	8-729-117-32	s	TRANSISTOR 2SC4177	
Q104	8-729-140-63	s	TRANSISTOR 2SA1611-M5M6	
Q105	8-729-117-32	s	TRANSISTOR 2SC4177	
Q106	8-729-117-32	s	TRANSISTOR 2SC4177	
Q107	8-729-117-32	s	TRANSISTOR 2SC4177	
Q108	8-729-923-06	s	TRANSISTOR FMW-8	
Q109	8-729-923-06	s	TRANSISTOR FMW-8	
Q110	8-729-923-06	s	TRANSISTOR FMW-8	
Q111	8-729-904-04	s	TRANSISTOR FMS2	
Q112	8-729-904-04	s	TRANSISTOR FMS2	
Q113	8-729-904-04	s	TRANSISTOR FMS2	
Q114	8-729-903-82	s	TRANSISTOR FMW2	
Q115	8-729-903-82	s	TRANSISTOR FMW2	
Q116	8-729-903-82	s	TRANSISTOR FMW2	
Q117	8-729-931-46	s	TRANSISTOR FMW7	
Q118	8-729-931-46	s	TRANSISTOR FMW7	
Q119	8-729-931-46	s	TRANSISTOR FMW7	
Q120	8-729-907-26	s	TRANSISTOR IMX1	
Q121	8-729-907-26	s	TRANSISTOR IMX1	
Q122	8-729-907-26	s	TRANSISTOR IMX1	
Q123	8-729-143-14	s	TRANSISTOR 2SC4176-B35	
Q124	8-729-117-32	s	TRANSISTOR 2SC4177	
Q125	8-729-140-63	s	TRANSISTOR 2SA1611-M5M6	
Q126	8-729-117-32	s	TRANSISTOR 2SC4177	
Q127	8-729-143-14	s	TRANSISTOR 2SC4176-B35	
Q128	8-729-140-63	s	TRANSISTOR 2SA1611-M5M6	
Q129	8-729-903-82	s	TRANSISTOR FMW2	
Q130	8-729-117-32	s	TRANSISTOR 2SC4177	
Q131	8-729-903-82	s	TRANSISTOR FMW2	
Q301	8-729-143-14	s	TRANSISTOR 2SC4176-B35	
Q302	8-729-904-41	s	TRANSISTOR FMY3	
Q303	8-729-140-63	s	TRANSISTOR 2SA1611-M5M6	
Q304	8-729-140-63	s	TRANSISTOR 2SA1611-M5M6	

(IO-149/149A BOARD; Suffix -14)

Ref. No. or Q'ty	Part No.	SP	Description
Q305	8-729-117-32	s	TRANSISTOR 2SC4177
Q306	8-729-117-32	s	TRANSISTOR 2SC4177
Q307	8-729-907-26	s	TRANSISTOR IMX1
Q308	8-729-117-32	s	TRANSISTOR 2SC4177
Q309	8-729-117-32	s	TRANSISTOR 2SC4177
Q310	8-729-143-14	s	TRANSISTOR 2SC4176-B35
Q311	8-729-117-32	s	TRANSISTOR 2SC4177
Q312	8-729-907-26	s	TRANSISTOR IMX1
Q313	8-729-140-63	s	TRANSISTOR 2SA1611-M5M6
Q314	8-729-140-63	s	TRANSISTOR 2SA1611-M5M6
Q315	8-729-117-32	s	TRANSISTOR 2SC4177
Q316	8-729-140-63	s	TRANSISTOR 2SA1611-M5M6
Q317	8-729-117-32	s	TRANSISTOR 2SC4177
Q318	8-729-904-41	s	TRANSISTOR FMY3
Q319	8-729-904-41	s	TRANSISTOR FMY3
Q320	8-729-117-32	s	TRANSISTOR 2SC4177
Q321	8-729-117-32	s	TRANSISTOR 2SC4177
Q322	8-729-117-32	s	TRANSISTOR 2SC4177
Q323	8-729-143-14	s	TRANSISTOR 2SC4176-B35
Q324	8-729-140-63	s	TRANSISTOR 2SA1611-M5M6
Q325	8-729-140-63	s	TRANSISTOR 2SA1611-M5M6
Q326	8-729-117-32	s	TRANSISTOR 2SC4177
Q327	8-729-117-32	s	TRANSISTOR 2SC4177
Q328	8-729-117-32	s	TRANSISTOR 2SC4177
Q329	8-729-117-32	s	TRANSISTOR 2SC4177
Q330	8-729-117-32	s	TRANSISTOR 2SC4177
Q331	8-729-904-41	s	TRANSISTOR FMY3
Q332	8-729-422-44	s	TRANSISTOR 2SK663
Q333	8-729-422-44	s	TRANSISTOR 2SK663
Q334	8-729-422-44	s	TRANSISTOR 2SK663
Q335	8-729-422-44	s	TRANSISTOR 2SK663
Q336	8-729-140-63	s	TRANSISTOR 2SA1611-M5M6
Q337	8-729-140-63	s	TRANSISTOR 2SA1611-M5M6
Q338	8-729-140-63	s	TRANSISTOR 2SA1611-M5M6
Q339	8-729-140-63	s	TRANSISTOR 2SA1611-M5M6
Q340	8-729-117-32	s	TRANSISTOR 2SC4177
Q341	8-729-907-26	s	TRANSISTOR IMX1
Q342	8-729-907-26	s	TRANSISTOR IMX1
Q343	8-729-117-32	s	TRANSISTOR 2SC4177
Q344	8-729-117-32	s	TRANSISTOR 2SC4177
Q345	8-729-907-26	s	TRANSISTOR IMX1
Q346	8-729-117-32	s	TRANSISTOR 2SC4177
Q347	8-729-907-26	s	TRANSISTOR IMX1
Q348	8-729-117-32	s	TRANSISTOR 2SC4177
Q349	8-729-140-63	s	TRANSISTOR 2SA1611-M5M6
Q350	8-729-140-63	s	TRANSISTOR 2SA1611-M5M6
Q501	8-729-117-32	s	TRANSISTOR 2SC4177
Q502	8-729-117-32	s	TRANSISTOR 2SC4177
Q503	8-729-117-32	s	TRANSISTOR 2SC4177
Q504	8-729-117-32	s	TRANSISTOR 2SC4177
Q505	8-729-117-32	s	TRANSISTOR 2SC4177
Q506	8-729-904-41	s	TRANSISTOR FMY3
Q507	8-729-117-32	s	TRANSISTOR 2SC4177
Q508	8-729-117-32	s	TRANSISTOR 2SC4177
Q509	8-729-117-32	s	TRANSISTOR 2SC4177
Q601	8-729-140-47	s	TRANSISTOR 2SC3735-T2B-B35
Q602	8-729-140-47	s	TRANSISTOR 2SC3735-T2B-B35
Q603	8-729-140-47	s	TRANSISTOR 2SC3735-T2B-B35
Q604	8-729-140-47	s	TRANSISTOR 2SC3735-T2B-B35

(IO-149/149A BOARD; Suffix -14)

Ref. No. or Q'ty	Part No.	SP	Description	
Q605	8-729-117-32	s	TRANSISTOR 2SC4177	
Q606	8-729-117-32	s	TRANSISTOR 2SC4177	
Q607	8-729-117-32	s	TRANSISTOR 2SC4177	
Q608	8-729-117-32	s	TRANSISTOR 2SC4177	
Q701	8-729-117-32	s	TRANSISTOR 2SC4177	
Q702	8-729-117-32	s	TRANSISTOR 2SC4177	
Q703	8-729-140-63	s	TRANSISTOR 2SA1611-M5M6	
Q704	8-729-027-38	s	TRANSISTOR DTA144EKA-T146	
Q705	1-801-806-11	s	TRANSISTOR DTC144EKA-T146	
Q706	8-729-904-41	s	TRANSISTOR FMY3	
Q707	8-729-117-32	s	TRANSISTOR 2SC4177	
Q708	8-729-117-32	s	TRANSISTOR 2SC4177	
Q709	8-729-904-04	s	TRANSISTOR FMS2	
Q710	8-729-117-32	s	TRANSISTOR 2SC4177	
Q711	8-729-117-32	s	TRANSISTOR 2SC4177	
Q712	8-729-140-63	s	TRANSISTOR 2SA1611-M5M6	
Q713	8-729-117-32	s	TRANSISTOR 2SC4177	
Q714	8-729-117-32	s	TRANSISTOR 2SC4177	
Q715	8-729-117-32	s	TRANSISTOR 2SC4177	
Q716	8-729-117-32	s	TRANSISTOR 2SC4177	[For NTSC]
Q717	8-729-117-32	s	TRANSISTOR 2SC4177	
Q718	8-729-907-26	s	TRANSISTOR IMX1	
Q719	8-729-903-82	s	TRANSISTOR FMW2	
Q720	8-729-907-26	s	TRANSISTOR IMX1	
Q721	8-729-903-82	s	TRANSISTOR FMW2	
Q722	8-729-117-32	s	TRANSISTOR 2SC4177	
Q723	8-729-117-32	s	TRANSISTOR 2SC4177	
Q724	8-729-117-32	s	TRANSISTOR 2SC4177	
Q725	8-729-117-32	s	TRANSISTOR 2SC4177	
Q726	8-729-117-32	s	TRANSISTOR 2SC4177	
Q727	8-729-140-63	s	TRANSISTOR 2SA1611-M5M6	
Q728	8-729-140-63	s	TRANSISTOR 2SA1611-M5M6	
Q729	8-729-140-63	s	TRANSISTOR 2SA1611-M5M6	
Q730	8-729-140-63	s	TRANSISTOR 2SA1611-M5M6	
Q731	8-729-117-32	s	TRANSISTOR 2SC4177	
Q732	8-729-140-63	s	TRANSISTOR 2SA1611-M5M6	
Q733	8-729-117-32	s	TRANSISTOR 2SC4177	
Q734	8-729-117-32	s	TRANSISTOR 2SC4177	
Q735	8-729-117-32	s	TRANSISTOR 2SC4177	
Q737	8-729-904-04	s	TRANSISTOR FMS2	
Q901	1-801-806-11	s	TRANSISTOR DTC144EKA-T146	
Q902	8-729-117-32	s	TRANSISTOR 2SC4177	
Q903	8-729-117-32	s	TRANSISTOR 2SC4177	
Q904	8-729-117-32	s	TRANSISTOR 2SC4177	
Q905	8-729-117-32	s	TRANSISTOR 2SC4177	
Q906	8-729-117-32	s	TRANSISTOR 2SC4177	
Q907	8-729-117-32	s	TRANSISTOR 2SC4177	
Q908	8-729-117-32	s	TRANSISTOR 2SC4177	
Q909	8-729-117-32	s	TRANSISTOR 2SC4177	
Q911	8-729-422-44	s	TRANSISTOR 2SK663	
Q912	8-729-422-44	s	TRANSISTOR 2SK663	
Q914	8-729-140-63	s	TRANSISTOR 2SA1611-M5M6	
Q915	8-729-422-44	s	TRANSISTOR 2SK663	
Q916	8-729-422-44	s	TRANSISTOR 2SK663	
Q917	8-729-117-32	s	TRANSISTOR 2SC4177	
Q918	8-729-140-63	s	TRANSISTOR 2SA1611-M5M6	
Q919	8-729-117-32	s	TRANSISTOR 2SC4177	
Q920	8-729-117-32	s	TRANSISTOR 2SC4177	
Q921	8-729-117-32	s	TRANSISTOR 2SC4177	

(IO-149/149A BOARD; Suffix -14)

Ref. No. or Q'ty	Part No.	SP	Description
Q922	8-729-117-32	s	TRANSISTOR 2SC4177
Q923	8-729-117-32	s	TRANSISTOR 2SC4177
Q924	8-729-117-32	s	TRANSISTOR 2SC4177
Q925	8-729-117-32	s	TRANSISTOR 2SC4177
Q926	8-729-117-32	s	TRANSISTOR 2SC4177
Q927	8-729-140-63	s	TRANSISTOR 2SA1611-M5M6
Q1001	1-801-806-11	s	TRANSISTOR DTC144EKA-T146
Q1002	8-729-140-63	s	TRANSISTOR 2SA1611-M5M6
Q1003	8-729-117-32	s	TRANSISTOR 2SC4177
Q1004	8-729-117-32	s	TRANSISTOR 2SC4177
Q1005	8-729-117-32	s	TRANSISTOR 2SC4177
Q1006	8-729-140-63	s	TRANSISTOR 2SA1611-M5M6
Q1007	8-729-140-63	s	TRANSISTOR 2SA1611-M5M6
Q1008	8-729-117-32	s	TRANSISTOR 2SC4177
Q1009	8-729-117-32	s	TRANSISTOR 2SC4177
Q1010	8-729-140-63	s	TRANSISTOR 2SA1611-M5M6
Q1011	8-729-140-63	s	TRANSISTOR 2SA1611-M5M6
Q1012	1-801-806-11	s	TRANSISTOR DTC144EKA-T146
Q1013	8-729-140-63	s	TRANSISTOR 2SA1611-M5M6
Q1014	8-729-117-32	s	TRANSISTOR 2SC4177
Q1015	8-729-140-63	s	TRANSISTOR 2SA1611-M5M6
Q1016	8-729-140-63	s	TRANSISTOR 2SA1611-M5M6
Q1017	8-729-117-32	s	TRANSISTOR 2SC4177
Q1018	8-729-140-47	s	TRANSISTOR 2SC3735-T2B-B35
Q1019	8-729-117-32	s	TRANSISTOR 2SC4177
Q1020	8-729-143-07	s	TRANSISTOR 2SA1610-Y33
Q1021	8-729-117-32	s	TRANSISTOR 2SC4177
Q1022	8-729-143-07	s	TRANSISTOR 2SA1610-Y33
Q1023	8-729-117-32	s	TRANSISTOR 2SC4177
R101	1-208-803-11	s	METAL, CHIP 7.5k 0.5% 1/10W
R102	1-208-796-11	s	METAL, CHIP 3.9k 0.5% 1/10W
R103	1-208-798-11	s	METAL, CHIP 4.7k 0.5% 1/10W
R104	1-208-806-11	s	METAL, CHIP 10k 0.5% 1/10W
R105	1-216-041-00	s	METAL, CHIP 470 5% 1/10W
R106	1-216-295-91	s	RES, CHIP 0
R107	1-208-783-11	s	METAL, CHIP 1.1k 0.5% 1/10W
R108	1-208-799-11	s	METAL, CHIP 5.1k 0.5% 1/10W
R110	1-216-295-91	s	RES, CHIP 0
R112	1-216-295-91	s	RES, CHIP 0
R113	1-208-799-11	s	METAL, CHIP 5.1k 0.5% 1/10W
R114	1-208-796-11	s	METAL, CHIP 3.9k 0.5% 1/10W
R115	1-208-794-11	s	METAL, CHIP 3.3k 0.5% 1/10W
R116	1-216-073-00	s	METAL, CHIP 10k 5% 1/10W
R117	1-208-786-11	s	METAL, CHIP 1.5k 0.5% 1/10W
R118	1-208-788-11	s	METAL, CHIP 1.8k 0.5% 1/10W
R119	1-208-806-11	s	METAL, CHIP 10k 0.5% 1/10W
R120	1-208-806-11	s	METAL, CHIP 10k 0.5% 1/10W
R121	1-216-073-00	s	METAL, CHIP 10k 5% 1/10W
R122	1-216-073-00	s	METAL, CHIP 10k 5% 1/10W
R123	1-216-085-00	s	METAL, CHIP 33k 5% 1/10W
R124	1-216-085-00	s	METAL, CHIP 33k 5% 1/10W
R125	1-216-121-91	s	METAL, CHIP 1M 5% 1/10W
R126	1-216-121-91	s	METAL, CHIP 1M 5% 1/10W
R127	1-216-085-00	s	METAL, CHIP 33k 5% 1/10W
R128	1-216-085-00	s	METAL, CHIP 33k 5% 1/10W
R129	1-216-121-91	s	METAL, CHIP 1M 5% 1/10W
R130	1-216-121-91	s	METAL, CHIP 1M 5% 1/10W
R131	1-216-033-00	s	METAL, CHIP 220 5% 1/10W
R132	1-216-033-00	s	METAL, CHIP 220 5% 1/10W

(IO-149/149A BOARD; Suffix -14)

Ref. No. or Q'ty	Part No.	SP	Description
R133	1-216-053-00	s	METAL, CHIP 1.5k 5% 1/10W
R134	1-216-053-00	s	METAL, CHIP 1.5k 5% 1/10W
R135	1-208-806-11	s	METAL, CHIP 10k 0.5% 1/10W
R136	1-216-073-00	s	METAL, CHIP 10k 5% 1/10W
R137	1-216-081-00	s	METAL, CHIP 22k 5% 1/10W
R138	1-216-121-91	s	METAL, CHIP 1M 5% 1/10W
R139	1-216-085-00	s	METAL, CHIP 33k 5% 1/10W
R140	1-216-121-91	s	METAL, CHIP 1M 5% 1/10W
R141	1-216-033-00	s	METAL, CHIP 220 5% 1/10W
R142	1-216-065-91	s	METAL, CHIP 4.7k 5% 1/10W[For NTSC]
R143	1-216-065-91	s	METAL, CHIP 4.7k 5% 1/10W[For NTSC]
R144	1-208-808-11	s	METAL, CHIP 12k 0.5% 1/10W
R145	1-208-809-11	s	METAL, CHIP 13k 0.5% 1/10W
R146	1-208-809-11	s	METAL, CHIP 13k 0.5% 1/10W
R147	1-208-798-11	s	METAL, CHIP 4.7k 0.5% 1/10W
R148	1-208-809-11	s	METAL, CHIP 13k 0.5% 1/10W
R149	1-208-790-11	s	METAL, CHIP 2.2k 0.5% 1/10W
R150	1-208-804-11	s	METAL, CHIP 8.2k 0.5% 1/10W
R151	1-208-790-11	s	METAL, CHIP 2.2k 0.5% 1/10W
R152	1-208-792-11	s	METAL, CHIP 2.7k 0.5% 1/10W
R153	1-208-792-11	s	METAL, CHIP 2.7k 0.5% 1/10W
R154	1-216-085-00	s	METAL, CHIP 33k 5% 1/10W
R155	1-208-806-11	s	METAL, CHIP 10k 0.5% 1/10W
R156	1-208-806-11	s	METAL, CHIP 10k 0.5% 1/10W
R157	1-208-810-11	s	METAL, CHIP 15k 0.5% 1/10W
R158	1-208-810-11	s	METAL, CHIP 15k 0.5% 1/10W
R159	1-208-790-11	s	METAL, CHIP 2.2k 0.5% 1/10W
R160	1-208-810-11	s	METAL, CHIP 15k 0.5% 1/10W
R161	1-208-810-11	s	METAL, CHIP 15k 0.5% 1/10W
R162	1-208-792-11	s	METAL, CHIP 2.7k 0.5% 1/10W
R163	1-208-810-11	s	METAL, CHIP 15k 0.5% 1/10W
R164	1-208-802-11	s	METAL, CHIP 6.8k 0.5% 1/10W
R165	1-208-802-11	s	METAL, CHIP 6.8k 0.5% 1/10W
R166	1-208-810-11	s	METAL, CHIP 15k 0.5% 1/10W
R167	1-208-794-11	s	METAL, CHIP 3.3k 0.5% 1/10W
R168	1-208-790-11	s	METAL, CHIP 2.2k 0.5% 1/10W
R169	1-216-081-00	s	METAL, CHIP 22k 5% 1/10W
R170	1-216-081-00	s	METAL, CHIP 22k 5% 1/10W
R171	1-216-081-00	s	METAL, CHIP 22k 5% 1/10W
R172	1-208-776-11	s	METAL, CHIP 560 0.5% 1/10W
R173	1-208-796-11	s	METAL, CHIP 3.9k 0.5% 1/10W
R174	1-208-796-11	s	METAL, CHIP 3.9k 0.5% 1/10W
R175	1-216-089-91	s	METAL, CHIP 47k 5% 1/10W
R176	1-208-798-11	s	METAL, CHIP 4.7k 0.5% 1/10W
R177	1-216-089-91	s	METAL, CHIP 47k 5% 1/10W
R178	1-216-089-91	s	METAL, CHIP 47k 5% 1/10W
R179	1-208-770-11	s	METAL, CHIP 330 0.5% 1/10W
R180	1-208-770-11	s	METAL, CHIP 330 0.5% 1/10W
R181	1-208-770-11	s	METAL, CHIP 330 0.5% 1/10W
R182	1-208-770-11	s	METAL, CHIP 330 0.5% 1/10W
R183	1-208-770-11	s	METAL, CHIP 330 0.5% 1/10W
R184	1-208-770-11	s	METAL, CHIP 330 0.5% 1/10W
R185	1-216-045-00	s	METAL, CHIP 680 5% 1/10W
R186	1-216-045-00	s	METAL, CHIP 680 5% 1/10W
R187	1-216-017-91	s	METAL, CHIP 47 5% 1/10W
R188	1-216-017-91	s	METAL, CHIP 47 5% 1/10W
R189	1-216-045-00	s	METAL, CHIP 680 5% 1/10W
R190	1-216-017-91	s	METAL, CHIP 47 5% 1/10W
R191	1-216-017-91	s	METAL, CHIP 47 5% 1/10W

(IO-149/149A BOARD; Suffix -14)

Ref. No. or Q'ty	Part No.	SP	Description
R192	1-216-017-91	s	METAL, CHIP 47 5% 1/10W
R193	1-216-017-91	s	METAL, CHIP 47 5% 1/10W
R194	1-216-057-00	s	METAL, CHIP 2.2k 5% 1/10W
R195	1-216-057-00	s	METAL, CHIP 2.2k 5% 1/10W
R196	1-216-057-00	s	METAL, CHIP 2.2k 5% 1/10W
R197	1-216-049-91	s	METAL, CHIP 1k 5% 1/10W
R198	1-216-049-91	s	METAL, CHIP 1k 5% 1/10W
R199	1-216-049-91	s	METAL, CHIP 1k 5% 1/10W
R200	1-216-049-91	s	METAL, CHIP 1k 5% 1/10W
R201	1-216-049-91	s	METAL, CHIP 1k 5% 1/10W
R202	1-216-049-91	s	METAL, CHIP 1k 5% 1/10W
R203	1-216-057-00	s	METAL, CHIP 2.2k 5% 1/10W
R204	1-216-057-00	s	METAL, CHIP 2.2k 5% 1/10W
R205	1-216-057-00	s	METAL, CHIP 2.2k 5% 1/10W
R206	1-216-033-00	s	METAL, CHIP 220 5% 1/10W
R207	1-216-033-00	s	METAL, CHIP 220 5% 1/10W
R208	1-216-033-00	s	METAL, CHIP 220 5% 1/10W
R209	1-216-045-00	s	METAL, CHIP 680 5% 1/10W
R210	1-216-045-00	s	METAL, CHIP 680 5% 1/10W
R211	1-216-045-00	s	METAL, CHIP 680 5% 1/10W
R212	1-216-077-00	s	METAL, CHIP 15k 5% 1/10W
R213	1-216-077-00	s	METAL, CHIP 15k 5% 1/10W
R214	1-216-077-00	s	METAL, CHIP 15k 5% 1/10W
R215	1-216-027-00	s	METAL, CHIP 120 5% 1/10W
R216	1-216-027-00	s	METAL, CHIP 120 5% 1/10W
R217	1-216-027-00	s	METAL, CHIP 120 5% 1/10W
R218	1-216-045-00	s	METAL, CHIP 680 5% 1/10W [For NTSC]
R219	1-216-045-00	s	METAL, CHIP 680 5% 1/10W [For NTSC]
R220	1-216-295-91	s	RES, CHIP 0
R221	1-216-017-91	s	METAL, CHIP 47 5% 1/10W
R222	1-216-017-91	s	METAL, CHIP 47 5% 1/10W
R223	1-216-017-91	s	METAL, CHIP 47 5% 1/10W
R224	1-208-782-11	s	METAL, CHIP 1k 0.5% 1/10W
R225	1-208-790-11	s	METAL, CHIP 2.2k 0.5% 1/10W
R226	1-208-782-11	s	METAL, CHIP 1k 0.5% 1/10W
R227	1-208-790-11	s	METAL, CHIP 2.2k 0.5% 1/10W
R228	1-216-049-91	s	METAL, CHIP 1k 5% 1/10W
R229	1-208-790-11	s	METAL, CHIP 2.2k 0.5% 1/10W
R230	1-208-782-11	s	METAL, CHIP 1k 0.5% 1/10W
R231	1-216-121-91	s	METAL, CHIP 1M 5% 1/10W
R232	1-216-049-91	s	METAL, CHIP 1k 5% 1/10W
R233	1-216-049-91	s	METAL, CHIP 1k 5% 1/10W
R234	1-216-121-91	s	METAL, CHIP 1M 5% 1/10W
R235	1-216-121-91	s	METAL, CHIP 1M 5% 1/10W
R236	1-216-049-91	s	METAL, CHIP 1k 5% 1/10W
R237	1-216-049-91	s	METAL, CHIP 1k 5% 1/10W
R238	1-216-049-91	s	METAL, CHIP 1k 5% 1/10W
R239	1-216-049-91	s	METAL, CHIP 1k 5% 1/10W
R240	1-216-049-91	s	METAL, CHIP 1k 5% 1/10W
R241	1-216-089-91	s	METAL, CHIP 47k 5% 1/10W
R242	1-216-049-91	s	METAL, CHIP 1k 5% 1/10W
R243	1-216-089-91	s	METAL, CHIP 47k 5% 1/10W
R244	1-216-073-00	s	METAL, CHIP 10k 5% 1/10W
R245	1-208-780-11	s	METAL, CHIP 820 0.5% 1/10W
R246	1-216-057-00	s	METAL, CHIP 2.2k 5% 1/10W
R247	1-208-782-11	s	METAL, CHIP 1k 0.5% 1/10W
R248	1-216-057-00	s	METAL, CHIP 2.2k 5% 1/10W
R249	1-208-774-11	s	METAL, CHIP 470 0.5% 1/10W
R250	1-208-770-11	s	METAL, CHIP 330 0.5% 1/10W

(IO-149/149A BOARD; Suffix -14)

Ref. No. or Q'ty	Part No.	SP	Description
R251	1-208-774-11	s	METAL, CHIP 470 0.5% 1/10W
R252	1-208-808-11	s	METAL, CHIP 12k 0.5% 1/10W
R253	1-208-814-11	s	METAL, CHIP 22k 0.5% 1/10W
R254	1-208-812-11	s	METAL, CHIP 18k 0.5% 1/10W
R255	1-208-814-11	s	METAL, CHIP 22k 0.5% 1/10W
R256	1-216-097-91	s	METAL, CHIP 100k 5% 1/10W
R257	1-216-089-91	s	METAL, CHIP 47k 5% 1/10W
R258	1-216-295-91	s	RES, CHIP 0
R259	1-208-799-11	s	METAL, CHIP 5.1k 0.5% 1/10W [For NTSC]
R259	1-208-806-11	s	METAL, CHIP 10k 0.5% 1/10W[For PAL]
R260	1-216-073-00	s	METAL, CHIP 10k 5% 1/10W
R261	1-216-049-91	s	METAL, CHIP 1k 5% 1/10W
R262	1-208-818-11	s	METAL, CHIP 33k 0.5% 1/10W [For NTSC]
R262	1-208-813-11	s	METAL, CHIP 20k 0.5% 1/10W[For PAL]
R263	1-216-065-91	s	METAL, CHIP 4.7k 5% 1/10W
R264	1-216-065-91	s	METAL, CHIP 4.7k 5% 1/10W
R265	1-216-049-91	s	METAL, CHIP 1k 5% 1/10W
R266	1-216-049-91	s	METAL, CHIP 1k 5% 1/10W
R267	1-216-049-91	s	METAL, CHIP 1k 5% 1/10W
R268	1-216-049-91	s	METAL, CHIP 1k 5% 1/10W
R269	1-216-057-00	s	METAL, CHIP 2.2k 5% 1/10W
R270	1-208-778-11	s	METAL, CHIP 680 0.5% 1/10W
R271	1-216-081-00	s	METAL, CHIP 22k 5% 1/10W
R272	1-208-797-11	s	METAL, CHIP 4.3k 0.5% 1/10W
R273	1-208-782-11	s	METAL, CHIP 1k 0.5% 1/10W [For PAL]
R274	1-208-792-11	s	METAL, CHIP 2.7k 0.5% 1/10W
R275	1-216-057-00	s	METAL, CHIP 2.2k 5% 1/10W
R276	1-216-049-91	s	METAL, CHIP 1k 5% 1/10W
R277	1-216-081-00	s	METAL, CHIP 22k 5% 1/10W
R278	1-216-025-91	s	METAL, CHIP 100 5% 1/10W
R279	1-216-017-91	s	METAL, CHIP 47 5% 1/10W
R280	1-208-788-11	s	METAL, CHIP 1.8k 0.5% 1/10W
R281	1-216-073-00	s	METAL, CHIP 10k 5% 1/10W
R282	1-216-097-91	s	METAL, CHIP 100k 5% 1/10W[For NTSC]
R282	1-216-105-91	s	METAL, CHIP 220k 5% 1/10W [For PAL]
R283	1-216-081-00	s	METAL, CHIP 22k 5% 1/10W
R284	1-216-081-00	s	METAL, CHIP 22k 5% 1/10W
R285	1-216-081-00	s	METAL, CHIP 22k 5% 1/10W
R286	1-216-081-00	s	METAL, CHIP 22k 5% 1/10W
R301	1-216-065-91	s	METAL, CHIP 4.7k 5% 1/10W
R302	1-216-025-91	s	METAL, CHIP 100 5% 1/10W
R303	1-216-065-91	s	METAL, CHIP 4.7k 5% 1/10W
R304	1-216-049-91	s	METAL, CHIP 1k 5% 1/10W
R305	1-216-049-91	s	METAL, CHIP 1k 5% 1/10W
R306	1-216-033-00	s	METAL, CHIP 220 5% 1/10W
R307	1-216-057-00	s	METAL, CHIP 2.2k 5% 1/10W
R308	1-216-057-00	s	METAL, CHIP 2.2k 5% 1/10W
R309	1-216-049-91	s	METAL, CHIP 1k 5% 1/10W
R310	1-216-049-91	s	METAL, CHIP 1k 5% 1/10W
R311	1-208-790-11	s	METAL, CHIP 2.2k 0.5% 1/10W
R312	1-208-758-11	s	METAL, CHIP 100 0.5% 1/10W
R313	1-216-295-91	s	RES, CHIP 0
R314	1-208-792-11	s	METAL, CHIP 2.7k 0.5% 1/10W
R315	1-216-065-91	s	METAL, CHIP 4.7k 5% 1/10W
R316	1-216-025-91	s	METAL, CHIP 100 5% 1/10W

(IO-149/149A BOARD; Suffix -14)

Ref. No. or Q'ty	Part No.	SP	Description
R317	1-208-778-11	s	METAL, CHIP 680 0.5% 1/10W
R318	1-216-017-91	s	METAL, CHIP 47 5% 1/10W
R319	1-208-788-11	s	METAL, CHIP 1.8k 0.5% 1/10W
R320	1-216-065-91	s	METAL, CHIP 4.7k 5% 1/10W
R321	1-216-025-91	s	METAL, CHIP 100 5% 1/10W
R322	1-208-774-11	s	METAL, CHIP 470 0.5% 1/10W
R323	1-208-784-11	s	METAL, CHIP 1.2k 0.5% 1/10W
R324	1-208-774-11	s	METAL, CHIP 470 0.5% 1/10W
R325	1-208-774-11	s	METAL, CHIP 470 0.5% 1/10W
R326	1-208-778-11	s	METAL, CHIP 680 0.5% 1/10W
R327	1-216-065-91	s	METAL, CHIP 4.7k 5% 1/10W
R328	1-208-770-11	s	METAL, CHIP 330 0.5% 1/10W
R329	1-216-049-91	s	METAL, CHIP 1k 5% 1/10W
R330	1-216-033-00	s	METAL, CHIP 220 5% 1/10W
R331	1-216-049-91	s	METAL, CHIP 1k 5% 1/10W
R332	1-216-049-91	s	METAL, CHIP 1k 5% 1/10W
R333	1-216-049-91	s	METAL, CHIP 1k 5% 1/10W
R336	1-216-061-00	s	METAL, CHIP 3.3k 5% 1/10W
R337	1-216-081-00	s	METAL, CHIP 22k 5% 1/10W
R338	1-208-798-11	s	METAL, CHIP 4.7k 0.5% 1/10W
R339	1-216-049-91	s	METAL, CHIP 1k 5% 1/10W
R340	1-208-774-11	s	METAL, CHIP 470 0.5% 1/10W
R341	1-208-774-11	s	METAL, CHIP 470 0.5% 1/10W
R342	1-208-782-11	s	METAL, CHIP 1k 0.5% 1/10W
R343	1-216-053-00	s	METAL, CHIP 1.5k 5% 1/10W
R344	1-216-025-91	s	METAL, CHIP 100 5% 1/10W
R345	1-208-774-11	s	METAL, CHIP 470 0.5% 1/10W
R346	1-216-077-00	s	METAL, CHIP 15k 5% 1/10W
R347	1-216-057-00	s	METAL, CHIP 2.2k 5% 1/10W
R348	1-208-786-11	s	METAL, CHIP 1.5k 0.5% 1/10W
R349	1-216-025-91	s	METAL, CHIP 100 5% 1/10W
R350	1-208-774-11	s	METAL, CHIP 470 0.5% 1/10W
R351	1-216-057-00	s	METAL, CHIP 2.2k 5% 1/10W
R352	1-208-765-11	s	METAL, CHIP 200 0.5% 1/10W
R354	1-216-057-00	s	METAL, CHIP 2.2k 5% 1/10W
R357	1-208-786-11	s	METAL, CHIP 1.5k 0.5% 1/10W
R359	1-216-057-00	s	METAL, CHIP 2.2k 5% 1/10W
R361	1-208-782-11	s	METAL, CHIP 1k 0.5% 1/10W
R362	1-216-025-91	s	METAL, CHIP 100 5% 1/10W
R363	1-216-025-91	s	METAL, CHIP 100 5% 1/10W
R364	1-216-049-91	s	METAL, CHIP 1k 5% 1/10W
R365	1-216-025-91	s	METAL, CHIP 100 5% 1/10W
R366	1-208-782-11	s	METAL, CHIP 1k 0.5% 1/10W
R367	1-208-784-11	s	METAL, CHIP 1.2k 0.5% 1/10W
R368	1-216-049-91	s	METAL, CHIP 1k 5% 1/10W
R369	1-216-049-91	s	METAL, CHIP 1k 5% 1/10W
R370	1-208-782-11	s	METAL, CHIP 1k 0.5% 1/10W
R371	1-216-057-00	s	METAL, CHIP 2.2k 5% 1/10W
R372	1-216-049-91	s	METAL, CHIP 1k 5% 1/10W
R373	1-216-049-91	s	METAL, CHIP 1k 5% 1/10W
R374	1-208-784-11	s	METAL, CHIP 1.2k 0.5% 1/10W
R375	1-208-784-11	s	METAL, CHIP 1.2k 0.5% 1/10W
R376	1-216-049-91	s	METAL, CHIP 1k 5% 1/10W
R377	1-216-049-91	s	METAL, CHIP 1k 5% 1/10W
R378	1-216-065-91	s	METAL, CHIP 4.7k 5% 1/10W
R379	1-216-025-91	s	METAL, CHIP 100 5% 1/10W
R380	1-216-065-91	s	METAL, CHIP 4.7k 5% 1/10W
R381	1-216-025-91	s	METAL, CHIP 100 5% 1/10W
R382	1-216-053-00	s	METAL, CHIP 1.5k 5% 1/10W

(IO-149/149A BOARD; Suffix -14)

Ref. No. or Q'ty	Part No.	SP	Description
R383	1-216-049-91	s	METAL, CHIP 1k 5% 1/10W
R384	1-216-049-91	s	METAL, CHIP 1k 5% 1/10W
R385	1-216-049-91	s	METAL, CHIP 1k 5% 1/10W
R386	1-216-049-91	s	METAL, CHIP 1k 5% 1/10W
R387	1-216-049-91	s	METAL, CHIP 1k 5% 1/10W
R388	1-216-049-91	s	METAL, CHIP 1k 5% 1/10W
R389	1-208-770-11	s	METAL, CHIP 330 0.5% 1/10W
R390	1-208-770-11	s	METAL, CHIP 330 0.5% 1/10W
R391	1-216-057-00	s	METAL, CHIP 2.2k 5% 1/10W
R392	1-216-041-00	s	METAL, CHIP 470 5% 1/10W
R393	1-216-057-00	s	METAL, CHIP 2.2k 5% 1/10W
R394	1-216-025-91	s	METAL, CHIP 100 5% 1/10W
R395	1-216-025-91	s	METAL, CHIP 100 5% 1/10W
R396	1-216-025-91	s	METAL, CHIP 100 5% 1/10W
R397	1-216-025-91	s	METAL, CHIP 100 5% 1/10W
R398	1-216-055-00	s	METAL, CHIP 1.8k 5% 1/10W
R399	1-216-065-91	s	METAL, CHIP 4.7k 5% 1/10W
R400	1-216-065-91	s	METAL, CHIP 4.7k 5% 1/10W
R401	1-216-065-91	s	METAL, CHIP 4.7k 5% 1/10W
R402	1-216-065-91	s	METAL, CHIP 4.7k 5% 1/10W
R403	1-208-800-11	s	METAL, CHIP 5.6k 0.5% 1/10
R404	1-208-790-11	s	METAL, CHIP 2.2k 0.5% 1/10W
R405	1-216-113-00	s	METAL, CHIP 470k 5% 1/10W
R406	1-216-049-91	s	METAL, CHIP 1k 5% 1/10W
R407	1-216-049-91	s	METAL, CHIP 1k 5% 1/10W
R408	1-216-049-91	s	METAL, CHIP 1k 5% 1/10W
R409	1-216-057-00	s	METAL, CHIP 2.2k 5% 1/10W
R410	1-208-800-11	s	METAL, CHIP 5.6k 0.5% 1/10
R411	1-208-790-11	s	METAL, CHIP 2.2k 0.5% 1/10W
R412	1-216-055-00	s	METAL, CHIP 1.8k 5% 1/10W
R413	1-216-057-00	s	METAL, CHIP 2.2k 5% 1/10W
R414	1-216-017-91	s	METAL, CHIP 47 5% 1/10W
R415	1-216-017-91	s	METAL, CHIP 47 5% 1/10W
R416	1-216-073-00	s	METAL, CHIP 10k 5% 1/10W
R417	1-208-774-11	s	METAL, CHIP 470 0.5% 1/10W
R418	1-208-774-11	s	METAL, CHIP 470 0.5% 1/10W
R419	1-208-784-11	s	METAL, CHIP 1.2k 0.5% 1/10W
R420	1-208-774-11	s	METAL, CHIP 470 0.5% 1/10W
R421	1-216-041-00	s	METAL, CHIP 470 5% 1/10W
R422	1-208-784-11	s	METAL, CHIP 1.2k 0.5% 1/10W
R423	1-208-774-11	s	METAL, CHIP 470 0.5% 1/10W
R424	1-208-774-11	s	METAL, CHIP 470 0.5% 1/10W
R425	1-208-794-11	s	METAL, CHIP 3.3k 0.5% 1/10W
R426	1-208-794-11	s	METAL, CHIP 3.3k 0.5% 1/10W
R427	1-216-053-00	s	METAL, CHIP 1.5k 5% 1/10W
R428	1-208-782-11	s	METAL, CHIP 1k 0.5% 1/10W
R429	1-208-770-11	s	METAL, CHIP 330 0.5% 1/10W
R430	1-208-782-11	s	METAL, CHIP 1k 0.5% 1/10W
R431	1-208-770-11	s	METAL, CHIP 330 0.5% 1/10W
R432	1-216-065-91	s	METAL, CHIP 4.7k 5% 1/10W
R433	1-216-065-91	s	METAL, CHIP 4.7k 5% 1/10W
R434	1-208-782-11	s	METAL, CHIP 1k 0.5% 1/10W[For NTSC]
R434	1-208-787-11	s	METAL, CHIP 1.6k 0.5% 1/10W [For PAL]
R435	1-208-791-11	s	METAL, CHIP 2.4k 0.5% 1/10W [For NTSC]

(IO-149/149A BOARD; Suffix -14)

Ref. No. or Q'ty	Part No.	SP	Description
R435	1-208-788-11	s	METAL, CHIP 1.8k 0.5% 1/10W [For PAL]
R436	1-216-049-91	s	METAL, CHIP 1k 5% 1/10W
R437	1-216-081-00	s	METAL, CHIP 22k 5% 1/10W
R438	1-208-784-11	s	METAL, CHIP 1.2k 0.5% 1/10W
R439	1-208-798-11	s	METAL, CHIP 4.7k 0.5% 1/10W
R440	1-208-782-11	s	METAL, CHIP 1k 0.5% 1/10W
R441	1-208-755-11	s	METAL, CHIP 75 0.5% 1/10W
R442	1-208-755-11	s	METAL, CHIP 75 0.5% 1/10W
R443	1-208-755-11	s	METAL, CHIP 75 0.5% 1/10W
R444	1-208-777-11	s	METAL, CHIP 620 0.5% 1/10W
R445	1-216-045-00	s	METAL, CHIP 680 5% 1/10W
R446	1-216-041-00	s	METAL, CHIP 470 5% 1/10W
R447	1-208-782-11	s	METAL, CHIP 1k 0.5% 1/10W[For NTSC]
R447	1-208-787-11	s	METAL, CHIP 1.6k 0.5% 1/10W [For PAL]
R448	1-216-041-00	s	METAL, CHIP 470 5% 1/10W
R449	1-208-791-11	s	METAL, CHIP 2.4k 0.5% 1/10W [For NTSC]
R449	1-208-788-11	s	METAL, CHIP 1.8k 0.5% 1/10W [For PAL]
R450	1-208-755-11	s	METAL, CHIP 75 0.5% 1/10W
R451	1-216-097-91	s	METAL, CHIP 100k 5% 1/10W
R452	1-216-073-00	s	METAL, CHIP 10k 5% 1/10W
R453	1-216-081-00	s	METAL, CHIP 22k 5% 1/10W
R454	1-216-095-00	s	METAL, CHIP 82k 5% 1/10W
R455	1-216-073-00	s	METAL, CHIP 10k 5% 1/10W
R456	1-208-755-11	s	METAL, CHIP 75 0.5% 1/10W
R457	1-208-755-11	s	METAL, CHIP 75 0.5% 1/10W
R458	1-208-806-11	s	METAL, CHIP 10k 0.5% 1/10W
R459	1-208-755-11	s	METAL, CHIP 75 0.5% 1/10W
R501	1-216-089-91	s	METAL, CHIP 47k 5% 1/10W
R502	1-208-814-11	s	METAL, CHIP 22k 0.5% 1/10W
R503	1-208-790-11	s	METAL, CHIP 2.2k 0.5% 1/10W [For NTSC]
R503	1-208-786-11	s	METAL, CHIP 1.5k 0.5% 1/10W [For PAL]
R504	1-208-806-11	s	METAL, CHIP 10k 0.5% 1/10W
R505	1-208-806-11	s	METAL, CHIP 10k 0.5% 1/10W
R506	1-208-790-11	s	METAL, CHIP 2.2k 0.5% 1/10W [For NTSC]
R507	1-216-295-91	s	RES, CHIP 0 [For NTSC]
R507	1-208-786-11	s	METAL, CHIP 1.5k 0.5% 1/10W [For PAL]
R508	1-216-073-00	s	METAL, CHIP 10k 5% 1/10W
R509	1-208-800-11	s	METAL, CHIP 5.6k 0.5% 1/10
R510	1-208-806-11	s	METAL, CHIP 10k 0.5% 1/10W
R511	1-208-794-11	s	METAL, CHIP 3.3k 0.5% 1/10W [For NTSC]

(IO-149/149A BOARD; Suffix -14)

Ref. No. or Q'ty	Part No.	SP	Description
R511	1-208-798-11	s	METAL, CHIP 4.7k 0.5% 1/10W [For PAL]
R512	1-208-802-11	s	METAL, CHIP 6.8k 0.5% 1/10W [For NTSC]
R513	1-208-808-11	s	METAL, CHIP 12k 0.5% 1/10W
R515	1-216-057-00	s	METAL, CHIP 2.2k 5% 1/10W
R516	1-208-822-11	s	CHIP, METAL 47k 0.5% 1/10W
R517	1-208-808-11	s	METAL, CHIP 12k 0.5% 1/10W
R518	1-208-810-11	s	METAL, CHIP 15k 0.5% 1/10W
R519	1-208-802-11	s	METAL, CHIP 6.8k 0.5% 1/10W
R520	1-208-810-11	s	METAL, CHIP 15k 0.5% 1/10W
R521	1-216-089-91	s	METAL, CHIP 47k 5% 1/10W
R522	1-216-097-91	s	METAL, CHIP 100k 5% 1/10W
R523	1-216-089-91	s	METAL, CHIP 47k 5% 1/10W
R524	1-208-806-11	s	METAL, CHIP 10k 0.5% 1/10W
R525	1-208-782-11	s	METAL, CHIP 1k 0.5% 1/10W
R526	1-208-806-11	s	METAL, CHIP 10k 0.5% 1/10W
R527	1-208-796-11	s	METAL, CHIP 3.9k 0.5% 1/10W
R528	1-208-808-11	s	METAL, CHIP 12k 0.5% 1/10W
R529	1-216-049-91	s	METAL, CHIP 1k 5% 1/10W
R530	1-216-065-91	s	METAL, CHIP 4.7k 5% 1/10W
R531	1-216-049-91	s	METAL, CHIP 1k 5% 1/10W
R532	1-216-049-91	s	METAL, CHIP 1k 5% 1/10W
R533	1-208-808-11	s	METAL, CHIP 12k 0.5% 1/10W
R534	1-216-051-00	s	METAL, CHIP 1.2k 5% 1/10W
R535	1-208-806-11	s	METAL, CHIP 10k 0.5% 1/10W
R536	1-216-059-00	s	METAL, CHIP 2.7k 5% 1/10W
R537	1-208-774-11	s	METAL, CHIP 470 0.5% 1/10W
R538	1-208-810-11	s	METAL, CHIP 15k 0.5% 1/10W
R539	1-216-049-91	s	METAL, CHIP 1k 5% 1/10W
R540	1-216-057-00	s	METAL, CHIP 2.2k 5% 1/10W
R541	1-208-782-11	s	METAL, CHIP 1k 0.5% 1/10W
R542	1-216-057-00	s	METAL, CHIP 2.2k 5% 1/10W
R543	1-216-073-00	s	METAL, CHIP 10k 5% 1/10W
R544	1-208-782-11	s	METAL, CHIP 1k 0.5% 1/10W
R545	1-208-814-11	s	METAL, CHIP 22k 0.5% 1/10W
R546	1-216-057-00	s	METAL, CHIP 2.2k 5% 1/10W
R547	1-216-017-91	s	METAL, CHIP 47 5% 1/10W
R548	1-208-814-11	s	METAL, CHIP 22k 0.5% 1/10W
R549	1-208-797-11	s	METAL, CHIP 4.3k 0.5% 1/10W
R550	1-208-786-11	s	METAL, CHIP 1.5k 0.5% 1/10W
R551	1-216-097-91	s	METAL, CHIP 100k 5% 1/10W
R552	1-216-059-00	s	METAL, CHIP 2.7k 5% 1/10W
R553	1-208-802-11	s	METAL, CHIP 6.8k 0.5% 1/10W
R554	1-208-786-11	s	METAL, CHIP 1.5k 0.5% 1/10W
R555	1-216-059-00	s	METAL, CHIP 2.7k 5% 1/10W
R556	1-216-073-00	s	METAL, CHIP 10k 5% 1/10W
R557	1-208-814-11	s	METAL, CHIP 22k 0.5% 1/10W
R558	1-216-017-91	s	METAL, CHIP 47 5% 1/10W
R559	1-208-818-11	s	METAL, CHIP 33k 0.5% 1/10W
R560	1-208-810-11	s	METAL, CHIP 15k 0.5% 1/10W
R561	1-208-814-11	s	METAL, CHIP 22k 0.5% 1/10W
R562	1-216-069-00	s	METAL, CHIP 6.8k 5% 1/10W
R563	1-208-818-11	s	METAL, CHIP 33k 0.5% 1/10W
R564	1-208-818-11	s	METAL, CHIP 33k 0.5% 1/10W
R565	1-216-047-91	s	METAL, CHIP 820 5% 1/10W

(IO-149/149A BOARD; Suffix -14)

Ref. No. or Q'ty	Part No.	SP	Description
R566	1-216-049-91	s	METAL, CHIP 1k 5% 1/10W
R567	1-208-822-11	s	METAL, CHIP 47k 0.5% 1/10W
R568	1-216-025-91	s	METAL, CHIP 100 5% 1/10W
R569	1-216-041-00	s	METAL, CHIP 470 5% 1/10W
R570	1-208-800-11	s	METAL, CHIP 5.6k 0.5% 1/10
R571	1-216-081-00	s	METAL, CHIP 22k 5% 1/10W
R572	1-216-049-91	s	METAL, CHIP 1k 5% 1/10W
R573	1-216-059-00	s	METAL, CHIP 2.7k 5% 1/10W
R574	1-208-812-11	s	METAL, CHIP 18k 0.5% 1/10W
R575	1-216-041-00	s	METAL, CHIP 470 5% 1/10W
R576	1-208-755-11	s	METAL, CHIP 75 0.5% 1/10W
R577	1-208-818-11	s	METAL, CHIP 33k 0.5% 1/10W
R579	1-208-850-11	s	METAL, CHIP 680k 0.5% 1/10W
R580	1-216-017-91	s	METAL, CHIP 47 5% 1/10W
R581	1-216-025-91	s	METAL, CHIP 100 5% 1/10W
R582	1-216-061-00	s	METAL, CHIP 3.3k 5% 1/10W
R583	1-216-097-91	s	METAL, CHIP 100k 5% 1/10W
R584	1-216-017-91	s	METAL, CHIP 47 5% 1/10W
R585	1-216-049-91	s	METAL, CHIP 1k 5% 1/10W
R586	1-216-049-91	s	METAL, CHIP 1k 5% 1/10W
R587	1-216-049-91	s	METAL, CHIP 1k 5% 1/10W
R588	1-216-093-00	s	METAL, CHIP 68k 5% 1/10W
R589	1-216-049-91	s	METAL, CHIP 1k 5% 1/10W
R590	1-208-797-11	s	METAL, CHIP 4.3k 0.5% 1/10W
R591	1-216-045-00	s	METAL, CHIP 680 5% 1/10W
R592	1-216-081-00	s	METAL, CHIP 22k 5% 1/10W
R593	1-208-804-11	s	METAL, CHIP 8.2k 0.5% 1/10W
R594	1-216-025-91	s	METAL, CHIP 100 5% 1/10W
R595	1-216-025-91	s	METAL, CHIP 100 5% 1/10W
R596	1-208-774-11	s	METAL, CHIP 470 0.5% 1/10W
R597	1-208-774-11	s	METAL, CHIP 470 0.5% 1/10W
R601	1-216-089-91	s	METAL, CHIP 47k 5% 1/10W
R602	1-216-097-91	s	METAL, CHIP 100k 5% 1/10W[For NTSC]
R603	1-216-295-91	s	RES, CHIP 0 [For PAL]
R604	1-216-097-91	s	METAL, CHIP 100k 5% 1/10W[For NTSC]
R605	1-216-295-91	s	RES, CHIP 0 [For PAL]
R606	1-216-073-00	s	METAL, CHIP 10k 5% 1/10W
R607	1-216-065-91	s	METAL, CHIP 4.7k 5% 1/10W
R608	1-216-017-91	s	METAL, CHIP 47 5% 1/10W
R609	1-216-295-91	s	RES, CHIP 0
R610	1-216-049-91	s	METAL, CHIP 1k 5% 1/10W
R612	1-216-085-00	s	METAL, CHIP 33k 5% 1/10W
R613	1-216-065-91	s	METAL, CHIP 4.7k 5% 1/10W[For NTSC]
R614	1-216-073-00	s	METAL, CHIP 10k 5% 1/10W
R615	1-216-065-91	s	METAL, CHIP 4.7k 5% 1/10W [For PAL]
R616	1-216-017-91	s	METAL, CHIP 47 5% 1/10W
R617	1-216-085-00	s	METAL, CHIP 33k 5% 1/10W
R618	1-216-085-00	s	METAL, CHIP 33k 5% 1/10W
R619	1-208-789-11	s	METAL, CHIP 2k 0.5% 1/10W
R620	1-216-051-00	s	METAL, CHIP 1.2k 5% 1/10W
R621	1-208-789-11	s	METAL, CHIP 2k 0.5% 1/10W
R622	1-216-051-00	s	METAL, CHIP 1.2k 5% 1/10W
R623	1-208-774-11	s	METAL, CHIP 470 0.5% 1/10W
R624	1-216-037-00	s	METAL, CHIP 330 5% 1/10W
R625	1-216-648-11	s	METAL, CHIP 750 0.5% 1/10W
R626	1-216-037-00	s	METAL, CHIP 330 5% 1/10W
R627	1-216-071-00	s	METAL, CHIP 8.2k 5% 1/10W
R628	1-208-817-11	s	METAL, CHIP 30k 0.5% 1/10W
R629	1-216-069-00	s	METAL, CHIP 6.8k 5% 1/10W

(IO-149/149A BOARD; Suffix -14)

Ref. No. or Q'ty	Part No.	SP	Description
R630	1-208-817-11	s	METAL, CHIP 30k 0.5% 1/10W
R631	1-216-041-00	s	METAL, CHIP 470 5% 1/10W
R632	1-216-041-00	s	METAL, CHIP 470 5% 1/10W
R633	1-216-017-91	s	METAL, CHIP 47 5% 1/10W
R634	1-216-097-91	s	METAL, CHIP 100k 5% 1/10W
R635	1-208-798-11	s	METAL, CHIP 4.7k 0.5% 1/10W
R637	1-216-115-00	s	METAL, CHIP 560k 5% 1/10W[For NTSC]
R637	1-208-850-11	s	METAL, CHIP 680k 0.5% 1/10W [For PAL]
R638	1-208-772-11	s	METAL, CHIP 390 0.5% 1/10W [For NTSC]
R638	1-208-790-11	s	METAL, CHIP 2.2k 0.5% 1/10W [For PAL]
R639	1-216-017-91	s	METAL, CHIP 47 5% 1/10W
R640	1-208-798-11	s	METAL, CHIP 4.7k 0.5% 1/10W [For NTSC]
R640	1-208-794-11	s	METAL, CHIP 3.3k 0.5% 1/10W [For PAL]
R641	1-208-772-11	s	METAL, CHIP 390 0.5% 1/10W [For NTSC]
R641	1-208-781-11	s	METAL, CHIP 910 0.5% 1/10W[For PAL]
R642	1-208-796-11	s	METAL, CHIP 3.9k 0.5% 1/10W
R643	1-208-808-11	s	METAL, CHIP 12k 0.5% 1/10W
R644	1-208-769-11	s	METAL, CHIP 300 0.5% 1/10W [For NTSC]
R644	1-208-766-11	s	METAL, CHIP 220 0.5% 1/10W[For PAL]
R645	1-208-769-11	s	METAL, CHIP 300 0.5% 1/10W [For NTSC]
R645	1-208-766-11	s	METAL, CHIP 220 0.5% 1/10W[For PAL]
R646	1-216-049-91	s	METAL, CHIP 1k 5% 1/10W
R647	1-216-049-91	s	METAL, CHIP 1k 5% 1/10W
R648	1-216-037-00	s	METAL, CHIP 330 5% 1/10W
R649	1-216-037-00	s	METAL, CHIP 330 5% 1/10W
R650	1-216-049-91	s	METAL, CHIP 1k 5% 1/10W
R651	1-216-049-91	s	METAL, CHIP 1k 5% 1/10W
R652	1-216-025-91	s	METAL, CHIP 100 5% 1/10W
R653	1-216-025-91	s	METAL, CHIP 100 5% 1/10W
R654	1-216-025-91	s	METAL, CHIP 100 5% 1/10W
R655	1-216-049-91	s	METAL, CHIP 1k 5% 1/10W
R656	1-216-049-91	s	METAL, CHIP 1k 5% 1/10W
R657	1-216-025-91	s	METAL, CHIP 100 5% 1/10W
R658	1-216-025-91	s	METAL, CHIP 100 5% 1/10W
R659	1-216-049-91	s	METAL, CHIP 1k 5% 1/10W
R701	1-208-765-11	s	METAL, CHIP 200 0.5% 1/10W
R702	1-208-800-11	s	METAL, CHIP 5.6k 0.5% 1/10
R703	1-208-758-11	s	METAL, CHIP 100 0.5% 1/10W
R704	1-208-782-11	s	METAL, CHIP 1k 0.5% 1/10W
R705	1-216-017-91	s	METAL, CHIP 47 5% 1/10W
R706	1-216-089-91	s	METAL, CHIP 47k 5% 1/10W

(IO-149/149A BOARD; Suffix -14)

Ref. No. or Q'ty	Part No.	SP	Description
R707	1-216-059-00	s	METAL, CHIP 2.7k 5% 1/10W
R708	1-216-037-00	s	METAL, CHIP 330 5% 1/10W
R709	1-216-121-91	s	METAL, CHIP 1M 5% 1/10W
R711	1-216-049-91	s	METAL, CHIP 1k 5% 1/10W
R712	1-208-782-11	s	METAL, CHIP 1k 0.5% 1/10W
R713	1-216-033-00	s	METAL, CHIP 220 5% 1/10W
R714	1-216-085-00	s	METAL, CHIP 33k 5% 1/10W
R715	1-208-782-11	s	METAL, CHIP 1k 0.5% 1/10W
R716	1-216-025-91	s	METAL, CHIP 100 5% 1/10W
R717	1-216-109-00	s	METAL, CHIP 330k 5% 1/10W
R718	1-216-049-91	s	METAL, CHIP 1k 5% 1/10W
R719	1-216-073-00	s	METAL, CHIP 10k 5% 1/10W
R720	1-216-059-00	s	METAL, CHIP 2.7k 5% 1/10W
R721	1-216-059-00	s	METAL, CHIP 2.7k 5% 1/10W
R722	1-216-033-00	s	METAL, CHIP 220 5% 1/10W
R723	1-216-047-91	s	METAL, CHIP 820 5% 1/10W
R724	1-208-766-11	s	METAL, CHIP 220 0.5% 1/10W
R725	1-208-800-11	s	METAL, CHIP 5.6k 0.5% 1/10
R726	1-208-758-11	s	METAL, CHIP 100 0.5% 1/10W
R727	1-208-782-11	s	METAL, CHIP 1k 0.5% 1/10W
R728	1-216-025-91	s	METAL, CHIP 100 5% 1/10W
R729	1-216-057-00	s	METAL, CHIP 2.2k 5% 1/10W
R730	1-208-765-11	s	METAL, CHIP 200 0.5% 1/10W
R731	1-208-765-11	s	METAL, CHIP 200 0.5% 1/10W
R732	1-216-049-91	s	METAL, CHIP 1k 5% 1/10W
R733	1-208-800-11	s	METAL, CHIP 5.6k 0.5% 1/10
R734	1-208-800-11	s	METAL, CHIP 5.6k 0.5% 1/10
R735	1-216-049-91	s	METAL, CHIP 1k 5% 1/10W
R736	1-216-049-91	s	METAL, CHIP 1k 5% 1/10W
R737	1-216-097-91	s	METAL, CHIP 100k 5% 1/10W[For NTSC]
R738	1-216-049-91	s	METAL, CHIP 1k 5% 1/10W
R739	1-216-033-00	s	METAL, CHIP 220 5% 1/10W
R740	1-216-049-91	s	METAL, CHIP 1k 5% 1/10W
R741	1-216-049-91	s	METAL, CHIP 1k 5% 1/10W
R742	1-216-049-91	s	METAL, CHIP 1k 5% 1/10W
R743	1-216-073-00	s	METAL, CHIP 10k 5% 1/10W [For NTSC]
R744	1-216-073-00	s	METAL, CHIP 10k 5% 1/10W
R745	1-208-625-11	s	METAL, CHIP 2.25k 0.1% 1/10W
R746	1-208-627-11	s	METAL, CHIP 4.41k 0.1% 1/10W
R747	1-208-630-11	s	METAL, CHIP 11.494k 0.1% 1/10W
R748	1-208-756-11	s	METAL, CHIP 82 0.5% 1/10W
R749	1-208-753-11	s	METAL, CHIP 62 0.5% 1/10W
R750	1-208-756-11	s	METAL, CHIP 82 0.5% 1/10W
R751	1-208-756-11	s	METAL, CHIP 82 0.5% 1/10W
R752	1-216-057-00	s	METAL, CHIP 2.2k 5% 1/10W
R754	1-216-057-00	s	METAL, CHIP 2.2k 5% 1/10W
R755	1-208-623-11	s	METAL, CHIP 1.43k 0.1% 1/10W
R756	1-208-625-11	s	METAL, CHIP 2.25k 0.1% 1/10W
R757	1-208-627-11	s	METAL, CHIP 4.41k 0.1% 1/10W
R758	1-208-788-11	s	METAL, CHIP 1.8k 0.5% 1/10W
R759	1-208-625-11	s	METAL, CHIP 2.25k 0.1% 1/10W
R760	1-208-630-11	s	METAL, CHIP 11.494k 0.1% 1/10W
R761	1-216-055-00	s	METAL, CHIP 1.8k 5% 1/10W
R762	1-216-049-91	s	METAL, CHIP 1k 5% 1/10W
R763	1-216-055-00	s	METAL, CHIP 1.8k 5% 1/10W
R764	1-216-097-91	s	METAL, CHIP 100k 5% 1/10W
R765	1-208-774-11	s	METAL, CHIP 470 0.5% 1/10W
R766	1-216-041-00	s	METAL, CHIP 470 5% 1/10W
R767	1-208-774-11	s	METAL, CHIP 470 0.5% 1/10W

(IO-149/149A BOARD; Suffix -14)

Ref. No. or Q'ty	Part No.	SP	Description
R768	1-216-041-00	s	METAL, CHIP 470 5% 1/10W
R769	1-208-789-11	s	METAL, CHIP 2k 0.5% 1/10W[For NTSC]
R769	1-208-776-11	s	METAL, CHIP 560 0.5% 1/10W[For PAL]
R770	1-208-774-11	s	METAL, CHIP 470 0.5% 1/10W
R771	1-208-782-11	s	METAL, CHIP 1k 0.5% 1/10W
R772	1-208-789-11	s	METAL, CHIP 2k 0.5% 1/10W[For NTSC]
R772	1-208-776-11	s	METAL, CHIP 560 0.5% 1/10W[For PAL]
R773	1-208-774-11	s	METAL, CHIP 470 0.5% 1/10W
R774	1-211-967-11	s	METAL, CHIP 43 0.5% 1/10W
R775	1-208-782-11	s	METAL, CHIP 1k 0.5% 1/10W
R776	1-218-477-11	s	METAL, CHIP 220 5% 1/4W
R777	1-218-477-11	s	METAL, CHIP 220 5% 1/4W
R778	1-216-045-00	s	METAL, CHIP 680 5% 1/10W
R779	1-216-049-91	s	METAL, CHIP 1k 5% 1/10W
R780	1-216-049-91	s	METAL, CHIP 1k 5% 1/10W
R781	1-216-049-91	s	METAL, CHIP 1k 5% 1/10W
R782	1-216-057-00	s	METAL, CHIP 2.2k 5% 1/10W
R783	1-216-057-00	s	METAL, CHIP 2.2k 5% 1/10W
R784	1-216-057-00	s	METAL, CHIP 2.2k 5% 1/10W
R785	1-216-057-00	s	METAL, CHIP 2.2k 5% 1/10W
R786	1-216-045-00	s	METAL, CHIP 680 5% 1/10W
R787	1-216-073-00	s	METAL, CHIP 10k 5% 1/10W
R788	1-216-025-91	s	METAL, CHIP 100 5% 1/10W
R789	1-208-770-11	s	METAL, CHIP 330 0.5% 1/10W
R790	1-216-025-91	s	METAL, CHIP 100 5% 1/10W
R794	1-216-049-91	s	METAL, CHIP 1k 5% 1/10W
R795	1-216-049-91	s	METAL, CHIP 1k 5% 1/10W
R796	1-216-049-91	s	METAL, CHIP 1k 5% 1/10W
R797	1-208-770-11	s	METAL, CHIP 330 0.5% 1/10W
R798	1-216-045-00	s	METAL, CHIP 680 5% 1/10W
R799	1-208-772-11	s	METAL, CHIP 390 0.5% 1/10W
R800	1-216-049-91	s	METAL, CHIP 1k 5% 1/10W
R801	1-216-017-91	s	METAL, CHIP 47 5% 1/10W
R802	1-216-057-00	s	METAL, CHIP 2.2k 5% 1/10W
R803	1-216-037-00	s	METAL, CHIP 330 5% 1/10W
R804	1-216-065-91	s	METAL, CHIP 4.7k 5% 1/10W
R805	1-216-049-91	s	METAL, CHIP 1k 5% 1/10W
R806	1-216-065-91	s	METAL, CHIP 4.7k 5% 1/10W
R807	1-216-057-00	s	METAL, CHIP 2.2k 5% 1/10W
R808	1-216-025-91	s	METAL, CHIP 100 5% 1/10W
R811	1-216-065-91	s	METAL, CHIP 4.7k 5% 1/10W
R813	1-216-049-91	s	METAL, CHIP 1k 5% 1/10W
R817	1-216-121-91	s	METAL, CHIP 1M 5% 1/10W
R818	1-216-057-00	s	METAL, CHIP 2.2k 5% 1/10W
R819	1-216-049-91	s	METAL, CHIP 1k 5% 1/10W
R821	1-216-081-00	s	METAL, CHIP 22k 5% 1/10W
R901	1-216-017-91	s	METAL, CHIP 47 5% 1/10W
R902	1-216-017-91	s	METAL, CHIP 47 5% 1/10W
R903	1-216-295-91	s	RES, CHIP 0
R905	1-216-073-00	s	METAL, CHIP 10k 5% 1/10W
R906	1-216-073-00	s	METAL, CHIP 10k 5% 1/10W
R907	1-216-089-91	s	METAL, CHIP 47k 5% 1/10W
R908	1-208-794-11	s	METAL, CHIP 3.3k 0.5% 1/10W
R909	1-208-794-11	s	METAL, CHIP 3.3k 0.5% 1/10W
R910	1-208-794-11	s	METAL, CHIP 3.3k 0.5% 1/10W
R911	1-216-073-00	s	METAL, CHIP 10k 5% 1/10W
R912	1-216-085-00	s	METAL, CHIP 33k 5% 1/10W
R913	1-208-815-11	s	METAL, CHIP 24k 0.5% 1/10W
R914	1-208-800-11	s	METAL, CHIP 5.6k 0.5% 1/10

(IO-149/149A BOARD; Suffix -14)

Ref. No. or Q'ty	Part No.	SP	Description	
R915	1-208-804-11	s	METAL, CHIP 8.2k 0.5% 1/10W	
R916	1-208-818-11	s	METAL, CHIP 33k 0.5% 1/10W	
R917	1-208-766-11	s	METAL, CHIP 220 0.5% 1/10W	
R918	1-208-766-11	s	METAL, CHIP 220 0.5% 1/10W	
R919	1-208-766-11	s	METAL, CHIP 220 0.5% 1/10W	
R920	1-208-766-11	s	METAL, CHIP 220 0.5% 1/10W	
R921	1-208-810-11	s	METAL, CHIP 15k 0.5% 1/10W	[For NTSC]
R922	1-208-814-11	s	METAL, CHIP 22k 0.5% 1/10W	
R923	1-208-802-11	s	METAL, CHIP 6.8k 0.5% 1/10W	[For NTSC]
R923	1-208-798-11	s	METAL, CHIP 4.7k 0.5% 1/10W	[For PAL]
R924	1-208-766-11	s	METAL, CHIP 220 0.5% 1/10W	
R925	1-208-766-11	s	METAL, CHIP 220 0.5% 1/10W	
R926	1-216-049-91	s	METAL, CHIP 1k 5% 1/10W	
R927	1-216-049-91	s	METAL, CHIP 1k 5% 1/10W	
R928	1-216-049-91	s	METAL, CHIP 1k 5% 1/10W	
R929	1-208-770-11	s	METAL, CHIP 330 0.5% 1/10W	
R930	1-208-770-11	s	METAL, CHIP 330 0.5% 1/10W	
R931	1-208-770-11	s	METAL, CHIP 330 0.5% 1/10W	
R932	1-208-770-11	s	METAL, CHIP 330 0.5% 1/10W	
R933	1-208-770-11	s	METAL, CHIP 330 0.5% 1/10W	
R934	1-208-770-11	s	METAL, CHIP 330 0.5% 1/10W	
R935	1-216-049-91	s	METAL, CHIP 1k 5% 1/10W	
R936	1-216-049-91	s	METAL, CHIP 1k 5% 1/10W	
R937	1-216-049-91	s	METAL, CHIP 1k 5% 1/10W	
R938	1-216-065-91	s	METAL, CHIP 4.7k 5% 1/10W	
R939	1-208-776-11	s	METAL, CHIP 560 0.5% 1/10W	
R940	1-216-037-00	s	METAL, CHIP 330 5% 1/10W	
R941	1-216-049-91	s	METAL, CHIP 1k 5% 1/10W	
R944	1-216-049-91	s	METAL, CHIP 1k 5% 1/10W	
R945	1-216-065-91	s	METAL, CHIP 4.7k 5% 1/10W	
R947	1-208-770-11	s	METAL, CHIP 330 0.5% 1/10W	
R948	1-216-025-91	s	METAL, CHIP 100 5% 1/10W	
R950	1-216-057-00	s	METAL, CHIP 2.2k 5% 1/10W	
R951	1-216-025-91	s	METAL, CHIP 100 5% 1/10W	
R952	1-216-049-91	s	METAL, CHIP 1k 5% 1/10W	
R953	1-208-777-11	s	METAL, CHIP 620 0.5% 1/10W	[For NTSC]
R953	1-208-772-11	s	METAL, CHIP 390 0.5% 1/10W	[For PAL]
R954	1-216-057-00	s	METAL, CHIP 2.2k 5% 1/10W	
R955	1-216-025-91	s	METAL, CHIP 100 5% 1/10W	
R956	1-208-787-11	s	METAL, CHIP 1.6k 0.5% 1/10W	
R957	1-208-782-11	s	METAL, CHIP 1k 0.5% 1/10W	
R958	1-216-017-91	s	METAL, CHIP 47 5% 1/10W	
R959	1-208-777-11	s	METAL, CHIP 620 0.5% 1/10W	[For NTSC]
R959	1-208-772-11	s	METAL, CHIP 390 0.5% 1/10W	[For PAL]
R960	1-216-049-91	s	METAL, CHIP 1k 5% 1/10W	
R961	1-208-787-11	s	METAL, CHIP 1.6k 0.5% 1/10W	
R962	1-208-782-11	s	METAL, CHIP 1k 0.5% 1/10W	
R963	1-208-766-11	s	METAL, CHIP 220 0.5% 1/10W	

(IO-149/149A BOARD; Suffix -14)

Ref. No. or Q'ty	Part No.	SP	Description	
R964	1-208-792-11	s	METAL, CHIP 2.7k 0.5% 1/10W	
R965	1-208-766-11	s	METAL, CHIP 220 0.5% 1/10W	
R966	1-208-792-11	s	METAL, CHIP 2.7k 0.5% 1/10W	
R967	1-216-295-91	s	RES, CHIP 0	[For PAL]
R968	1-216-295-91	s	RES, CHIP 0	[For PAL]
R969	1-208-755-11	s	METAL, CHIP 75 0.5% 1/10W	
R970	1-208-755-11	s	METAL, CHIP 75 0.5% 1/10W	
R971	1-216-017-91	s	METAL, CHIP 47 5% 1/10W	
R972	1-216-017-91	s	METAL, CHIP 47 5% 1/10W	
R977	1-208-790-11	s	METAL, CHIP 2.2k 0.5% 1/10W	
R978	1-208-770-11	s	METAL, CHIP 330 0.5% 1/10W	
R979	1-216-065-91	s	METAL, CHIP 4.7k 5% 1/10W	
R980	1-216-049-91	s	METAL, CHIP 1k 5% 1/10W	
R981	1-216-097-91	s	METAL, CHIP 100k 5% 1/10W	
R982	1-216-121-91	s	METAL, CHIP 1M 5% 1/10W	
R984	1-216-049-91	s	METAL, CHIP 1k 5% 1/10W	
R985	1-208-794-11	s	METAL, CHIP 3.3k 0.5% 1/10W	
R987	1-216-033-00	s	METAL, CHIP 220 5% 1/10W	
R988	1-216-295-91	s	RES, CHIP 0	
R989	1-216-065-91	s	METAL, CHIP 4.7k 5% 1/10W	
R990	1-216-045-00	s	METAL, CHIP 680 5% 1/10W	
R991	1-208-798-11	s	METAL, CHIP 4.7k 0.5% 1/10W	
R992	1-216-049-91	s	METAL, CHIP 1k 5% 1/10W	
R993	1-216-073-00	s	METAL, CHIP 10k 5% 1/10W	
R995	1-216-097-91	s	METAL, CHIP 100k 5% 1/10W	
R996	1-216-025-91	s	METAL, CHIP 100 5% 1/10W	
R997	1-216-097-91	s	METAL, CHIP 100k 5% 1/10W	[For NTSC]
R998	1-216-025-91	s	METAL, CHIP 100 5% 1/10W	
R1001	1-216-073-00	s	METAL, CHIP 10k 5% 1/10W	
R1002	1-216-073-00	s	METAL, CHIP 10k 5% 1/10W	
R1003	1-216-049-91	s	METAL, CHIP 1k 5% 1/10W	
R1004	1-208-784-11	s	METAL, CHIP 1.2k 0.5% 1/10W	
R1005	1-216-057-00	s	METAL, CHIP 2.2k 5% 1/10W	
R1006	1-216-057-00	s	METAL, CHIP 2.2k 5% 1/10W	
R1007	1-216-057-00	s	METAL, CHIP 2.2k 5% 1/10W	
R1008	1-216-073-00	s	METAL, CHIP 10k 5% 1/10W	
R1009	1-216-073-00	s	METAL, CHIP 10k 5% 1/10W	
R1010	1-216-049-91	s	METAL, CHIP 1k 5% 1/10W	
R1011	1-216-049-91	s	METAL, CHIP 1k 5% 1/10W	
R1012	1-216-049-91	s	METAL, CHIP 1k 5% 1/10W	
R1013	1-216-049-91	s	METAL, CHIP 1k 5% 1/10W	
R1014	1-216-097-91	s	METAL, CHIP 100k 5% 1/10W	
R1015	1-216-049-91	s	METAL, CHIP 1k 5% 1/10W	
R1016	1-208-777-11	s	METAL, CHIP 620 0.5% 1/10W	
R1017	1-216-057-00	s	METAL, CHIP 2.2k 5% 1/10W	
R1018	1-216-057-00	s	METAL, CHIP 2.2k 5% 1/10W	
R1019	1-216-045-00	s	METAL, CHIP 680 5% 1/10W	
R1020	1-216-121-91	s	METAL, CHIP 1M 5% 1/10W	
R1021	1-216-025-91	s	METAL, CHIP 100 5% 1/10W	
R1022	1-216-065-91	s	METAL, CHIP 4.7k 5% 1/10W	
R1023	1-216-049-91	s	METAL, CHIP 1k 5% 1/10W	
R1024	1-216-065-91	s	METAL, CHIP 4.7k 5% 1/10W	
R1025	1-208-842-11	s	METAL, CHIP 330k 0.5% 1/10W	[For PAL]
R1026	1-208-830-11	s	METAL, CHIP 100k 0.5% 1/10W	[For NTSC]

(IO-149/149A BOARD; Suffix -14)

Ref. No. or Q'ty	Part No.	SP	Description
R1026	1-208-842-11	s	METAL, CHIP 330k 0.5% 1/10W [For PAL]
R1027	1-216-117-00	s	METAL, CHIP 680k 5% 1/10W
R1028	1-216-073-00	s	METAL, CHIP 10k 5% 1/10W
R1029	1-208-798-11	s	METAL, CHIP 4.7k 0.5% 1/10W
R1030	1-216-089-91	s	METAL, CHIP 47k 5% 1/10W
R1031	1-216-085-00	s	METAL, CHIP 33k 5% 1/10W
R1032	1-208-798-11	s	METAL, CHIP 4.7k 0.5% 1/10W
R1033	1-208-838-11	s	METAL, CHIP 220k 0.5% 1/10W
R1034	1-216-049-91	s	METAL, CHIP 1k 5% 1/10W
R1035	1-216-073-00	s	METAL, CHIP 10k 5% 1/10W
R1036	1-216-085-00	s	METAL, CHIP 33k 5% 1/10W
R1037	1-216-085-00	s	METAL, CHIP 33k 5% 1/10W
R1038	1-216-065-91	s	METAL, CHIP 4.7k 5% 1/10W
R1039	1-216-049-91	s	METAL, CHIP 1k 5% 1/10W
R1040	1-216-049-91	s	METAL, CHIP 1k 5% 1/10W
R1041	1-216-025-91	s	METAL, CHIP 100 5% 1/10W
R1042	1-208-801-11	s	METAL, CHIP 6.2k 0.5% 1/10W
R1043	1-208-765-11	s	METAL, CHIP 200 0.5% 1/10W
R1044	1-208-794-11	s	METAL, CHIP 3.3k 0.5% 1/10W
R1045	1-216-085-00	s	METAL, CHIP 33k 5% 1/10W
R1046	1-216-065-91	s	METAL, CHIP 4.7k 5% 1/10W
R1047	1-216-117-00	s	METAL, CHIP 680k 5% 1/10W
R1048	1-208-789-11	s	METAL, CHIP 2k 0.5% 1/10W
R1049	1-208-784-11	s	METAL, CHIP 1.2k 0.5% 1/10W
R1050	1-216-648-11	s	METAL, CHIP 750 0.5% 1/10W
R1051	1-216-037-00	s	METAL, CHIP 330 5% 1/10W
R1052	1-208-798-11	s	METAL, CHIP 4.7k 0.5% 1/10W
R1053	1-208-802-11	s	METAL, CHIP 6.8k 0.5% 1/10W
R1054	1-208-817-11	s	METAL, CHIP 30k 0.5% 1/10W
R1055	1-216-049-91	s	METAL, CHIP 1k 5% 1/10W
R1056	1-216-041-00	s	METAL, CHIP 470 5% 1/10W
R1057	1-216-049-91	s	METAL, CHIP 1k 5% 1/10W
R1058	1-216-133-00	s	METAL, CHIP 3.3M 5% 1/10W
R1059	1-208-806-11	s	METAL, CHIP 10k 0.5% 1/10W
R1060	1-208-806-11	s	METAL, CHIP 10k 0.5% 1/10W
R1061	1-216-025-91	s	METAL, CHIP 100 5% 1/10W
R1062	1-216-049-91	s	METAL, CHIP 1k 5% 1/10W
R1064	1-208-782-11	s	METAL, CHIP 1k 0.5% 1/10W
R1065	1-208-796-11	s	METAL, CHIP 3.9k 0.5% 1/10W
R1066	1-216-073-00	s	METAL, CHIP 10k 5% 1/10W
R1067	1-216-049-91	s	METAL, CHIP 1k 5% 1/10W
R1068	1-216-073-00	s	METAL, CHIP 10k 5% 1/10W
R1069	1-216-049-91	s	METAL, CHIP 1k 5% 1/10W
R1070	1-208-766-11	s	METAL, CHIP 220 0.5% 1/10W
R1071	1-208-770-11	s	METAL, CHIP 330 0.5% 1/10W
R1072	1-216-295-91	s	RES, CHIP 0 [For PAL]
R1073	1-216-295-91	s	RES, CHIP 0
R1075	1-216-059-00	s	METAL, CHIP 2.7k 5% 1/10W
R1076	1-216-097-91	s	METAL, CHIP 100k 5% 1/10W
R1077	1-216-295-91	s	RES, CHIP 0 [For PAL]
R1078	1-216-295-91	s	RES, CHIP 0 [For PAL]
R1079	1-216-097-91	s	METAL, CHIP 100k 5% 1/10W
R1080	1-216-025-91	s	METAL, CHIP 100 5% 1/10W
R1081	1-216-073-00	s	METAL, CHIP 10k 5% 1/10W
R1083	1-216-049-91	s	METAL, CHIP 1k 5% 1/10W
R1084	1-216-059-00	s	METAL, CHIP 2.7k 5% 1/10W

(IO-149/149A BOARD; Suffix -14)

Ref. No. or Q'ty	Part No.	SP	Description
R1085	1-216-025-91	s	METAL, CHIP 100 5% 1/10W
R1086	1-216-117-00	s	METAL, CHIP 680k 5% 1/10W
R1087	1-208-827-11	s	METAL, CHIP 75k 0.5% 1/10W
R1088	1-216-072-00	s	METAL, CHIP 9.1k 5% 1/10W
R1089	1-208-782-11	s	METAL, CHIP 1k 0.5% 1/10W
R1090	1-208-782-11	s	METAL, CHIP 1k 0.5% 1/10W
R1091	1-208-786-11	s	METAL, CHIP 1.5k 0.5% 1/10W [For NTSC]
R1091	1-208-784-11	s	METAL, CHIP 1.2k 0.5% 1/10W [For PAL]
R1092	1-208-786-11	s	METAL, CHIP 1.5k 0.5% 1/10W [For NTSC]
R1092	1-208-784-11	s	METAL, CHIP 1.2k 0.5% 1/10W [For PAL]
R1093	1-216-061-00	s	METAL, CHIP 3.3k 5% 1/10W
R1094	1-208-794-11	s	METAL, CHIP 3.3k 0.5% 1/10W
R1095	1-216-049-91	s	METAL, CHIP 1k 5% 1/10W
R1097	1-216-025-91	s	METAL, CHIP 100 5% 1/10W
R1098	1-208-814-11	s	METAL, CHIP 22k 0.5% 1/10W
R1099	1-208-814-11	s	METAL, CHIP 22k 0.5% 1/10W
R1100	1-216-081-00	s	METAL, CHIP 22k 5% 1/10W
R1101	1-216-113-00	s	METAL, CHIP 470k 5% 1/10W
R1102	1-208-808-11	s	METAL, CHIP 12k 0.5% 1/10W
R1103	1-216-073-00	s	METAL, CHIP 10k 5% 1/10W
R1104	1-216-113-00	s	METAL, CHIP 470k 5% 1/10W
R1105	1-216-103-00	s	METAL, CHIP 180k 5% 1/10W
R1106	1-216-073-00	s	METAL, CHIP 10k 5% 1/10W
R1108	1-208-790-11	s	METAL, CHIP 2.2k 0.5% 1/10W
R1109	1-208-776-11	s	METAL, CHIP 560 0.5% 1/10W
R1110	1-216-117-00	s	METAL, CHIP 680k 5% 1/10W
R1111	1-216-081-00	s	METAL, CHIP 22k 5% 1/10W
R1112	1-216-081-00	s	METAL, CHIP 22k 5% 1/10W
R1113	1-216-097-91	s	METAL, CHIP 100k 5% 1/10W
RB101	1-239-999-11	s	RESISTOR BLOCK, CHIP 1k x 4
RB102	1-239-998-11	s	RESISTOR BLOCK, CHIP 100 x 4
RB103	1-233-237-11	s	RESISTOR BLOCK, CHIP 100k x 4
RB201	1-233-235-11	s	RESISTOR BLOCK, CHIP 10k x 4
RB202	1-233-235-11	s	RESISTOR BLOCK, CHIP 10k x 4
RB701	1-233-234-11	s	RESISTOR BLOCK, CHIP 2.2k x 4
RB1000	1-233-237-11	s	RESISTOR BLOCK, CHIP 100k x 4
RB1001	1-239-999-11	s	RESISTOR BLOCK, CHIP 1k x 4
RV101	1-237-034-11	s	RES, ADJ, METAL 2k
RV102	1-237-034-11	s	RES, ADJ, METAL 2k
RV103	1-237-034-11	s	RES, ADJ, METAL 2k
RV104	1-237-034-11	s	RES, ADJ, METAL 2k [For NTSC]
RV105	1-237-035-11	s	RES, ADJ, METAL 5k
RV106	1-237-035-11	s	RES, ADJ, METAL 5k
RV107	1-237-036-11	s	RES, ADJ, METAL 10k
RV108	1-237-036-11	s	RES, ADJ, METAL 10k
RV109	1-237-036-11	s	RES, ADJ, METAL 10k
RV110	1-237-035-11	s	RES, ADJ, METAL 5k
RV111	1-237-035-11	s	RES, ADJ, METAL 5k
RV112	1-237-034-11	s	RES, ADJ, METAL 2k

(IO-149/149A BOARD; Suffix -14)

Ref. No. or Q'ty	Part No.	SP	Description	
RV301	1-237-033-11	s	RES, ADJ, METAL 1k	
RV302	1-237-034-11	s	RES, ADJ, METAL 2k	
RV303	1-237-032-11	s	RES, ADJ, METAL 500	
RV304	1-237-033-11	s	RES, ADJ, METAL 1k	
RV305	1-237-035-11	s	RES, ADJ, METAL 5k	
RV306	1-237-033-11	s	RES, ADJ, METAL 1k	
RV307	1-237-033-11	s	RES, ADJ, METAL 1k	
RV308	1-237-032-11	s	RES, ADJ, METAL 500	
RV309	1-237-034-11	s	RES, ADJ, METAL 2k	
RV310	1-237-034-11	s	RES, ADJ, METAL 2k	
RV311	1-237-032-11	s	RES, ADJ, METAL 500	
RV312	1-237-035-11	s	RES, ADJ, METAL 5k	
RV313	1-237-035-11	s	RES, ADJ, METAL 5k	
RV314	1-237-032-11	s	RES, ADJ, METAL 500	
RV315	1-237-032-11	s	RES, ADJ, METAL 500	
RV316	1-237-033-11	s	RES, ADJ, METAL 1k	
RV317	1-237-033-11	s	RES, ADJ, METAL 1k	
RV318	1-237-030-11	s	RES, ADJ, METAL 100	
RV319	1-237-030-11	s	RES, ADJ, METAL 100	
RV501	1-237-035-11	s	RES, ADJ, METAL 5k	
RV502	1-237-036-11	s	RES, ADJ, METAL 10k	
RV503	1-237-037-11	s	RES, ADJ, METAL 20k	
RV504	1-237-036-11	s	RES, ADJ, METAL 10k	
RV505	1-237-034-11	s	RES, ADJ, METAL 2k	
RV506	1-237-033-11	s	RES, ADJ, METAL 1k	
RV601	1-237-035-11	s	RES, ADJ, METAL 5k	
RV701	1-237-033-11	s	RES, ADJ, METAL 1k	
RV702	1-237-033-11	s	RES, ADJ, METAL 1k	
RV703	1-237-032-11	s	RES, ADJ, METAL 500	
RV704	1-237-031-11	s	RES, ADJ, METAL 200	
RV901	1-237-034-11	s	RES, ADJ, METAL 2k	
RV902	1-237-035-11	s	RES, ADJ, METAL 5k	
RV903	1-237-036-11	s	RES, ADJ, METAL 10k	
RV904	1-237-031-11	s	RES, ADJ, METAL 200	
RV905	1-237-034-11	s	RES, ADJ, METAL 2k	
RV906	1-237-034-11	s	RES, ADJ, METAL 2k	
RV907	1-237-034-11	s	RES, ADJ, METAL 2k	
RV908	1-237-034-11	s	RES, ADJ, METAL 2k	
RV909	1-237-034-11	s	RES, ADJ, METAL 2k	
RV910	1-237-034-11	s	RES, ADJ, METAL 2k	
RV911	1-237-034-11	s	RES, ADJ, METAL 2k	
RV912	1-237-034-11	s	RES, ADJ, METAL 2k	
RV913	1-237-031-11	s	RES, ADJ, METAL 200	
RV914	1-237-031-11	s	RES, ADJ, METAL 200	
RV915	1-237-033-11	s	RES, ADJ, METAL 1k	
RV1001	1-237-034-11	s	RES, ADJ, METAL 2k	
RV1002	1-237-035-11	s	RES, ADJ, METAL 5k	
RV1003	1-237-035-11	s	RES, ADJ, METAL 5k	
RV1004	1-237-034-11	s	RES, ADJ, METAL 2k	
S901	1-571-275-31	s	SWITCH, SLIDE	
TH101	1-809-352-11	s	THERMISTOR, CHIP 1.5k	
TH901	1-809-352-11	s	THERMISTOR, CHIP 1.5k	[For NTSC]
X101	1-767-260-11	s	CRYSTAL 13.50MHz	
X102	1-767-260-11	s	CRYSTAL 13.50MHz	
X103	1-767-260-11	s	CRYSTAL 13.50MHz	
X601	1-767-262-11	s	CRYSTAL 27.00MHz	
X602	1-527-722-00	s	CRYSTAL 14.31818MHz	[For NTSC]

(IO-149/149A BOARD; Suffix -14)

Ref. No. or Q'ty	Part No.	SP	Description	
X602	1-760-457-11	s	CRYSTAL 17.7345MHz	[For PAL]
X1001	1-760-109-21	s	CRYSTAL 10.7386MHz	[For NTSC]
X1002	1-527-722-00	s	CRYSTAL 14.31818MHz	[For NTSC]
X1002	1-760-457-11	s	CRYSTAL 17.7345MHz	[For PAL]

IO-149/149A BOARD; Suffix -13

Ref. No. or Q'ty	Part No.	SP	Description

This list corresponds to the board suffix number -13.

The parts marked * are different, depending on the product serial numbers, as shown below:
*1) Serial number; 10001 through 10780 (For DSR-80 J)
Serial number; 10001 through 11750 (For DSR-80 UC)
Serial number; 10001 through 11470 (For DSR-80P CE)
*2) Serial number; 10781 and higher (For DSR-80 J)
Serial number; 11751 and higher (For DSR-80 UC)
Serial number; 11471 and higher (For DSR-80P CE)

Ref. No. or Q'ty	Part No.	SP	Description
1pc	A-8315-283-A	o	MOUNTED CIRCUIT BOARD, IO-149 [For NTSC]
1pc	A-8315-293-A	o	MOUNTED CIRCUIT BOARD, IO-149A [For PAL]
1pc	7-621-759-45	s	+PSW, 2.6x6
1pc	3-179-085-01	s	LEVER (L), PRINTED CIRCUIT BOARD
1pc	3-179-084-01	s	LEVER (R), PRINTED CIRCUIT BOARD
C1	1-126-392-11	s	ELECT, CHIP 100uF 20% 6.3V
C2	1-163-038-91	s	CERAMIC, CHIP 0.1uF 25V
C3	1-126-392-11	s	ELECT, CHIP 100uF 20% 6.3V
C4	1-163-038-91	s	CERAMIC, CHIP 0.1uF 25V
C5	1-126-392-11	s	ELECT, CHIP 100uF 20% 6.3V
C6	1-163-038-91	s	CERAMIC, CHIP 0.1uF 25V
C11	1-126-396-11	s	ELECT, CHIP 47uF 20% 16V
C12	1-163-038-91	s	CERAMIC, CHIP 0.1uF 25V
C13	1-126-396-11	s	ELECT, CHIP 47uF 20% 16V
C14	1-163-038-91	s	CERAMIC, CHIP 0.1uF 25V
C15	1-126-396-11	s	ELECT, CHIP 47uF 20% 16V
C16	1-163-038-91	s	CERAMIC, CHIP 0.1uF 25V
C21	1-126-396-11	s	ELECT, CHIP 47uF 20% 16V
C22	1-163-038-91	s	CERAMIC, CHIP 0.1uF 25V
C23	1-126-396-11	s	ELECT, CHIP 47uF 20% 16V
C24	1-163-038-91	s	CERAMIC, CHIP 0.1uF 25V
C25	1-126-396-11	s	ELECT, CHIP 47uF 20% 16V
C26	1-163-038-91	s	CERAMIC, CHIP 0.1uF 25V
C31	1-126-396-11	s	ELECT, CHIP 47uF 20% 16V
C32	1-163-038-91	s	CERAMIC, CHIP 0.1uF 25V
C33	1-126-396-11	s	ELECT, CHIP 47uF 20% 16V
C34	1-163-038-91	s	CERAMIC, CHIP 0.1uF 25V
C35	1-126-396-11	s	ELECT, CHIP 47uF 20% 16V
C36	1-163-038-91	s	CERAMIC, CHIP 0.1uF 25V
C37	1-126-396-11	s	ELECT, CHIP 47uF 20% 16V
C38	1-163-038-91	s	CERAMIC, CHIP 0.1uF 25V
C39	1-126-396-11	s	ELECT, CHIP 47uF 20% 16V
C40	1-163-038-91	s	CERAMIC, CHIP 0.1uF 25V
C101	1-164-004-11	s	CERAMIC, CHIP 0.1uF 10% 25V
C102	1-163-037-11	s	CERAMIC, CHIP 0.022uF 10% 25V
C103	1-126-396-11	s	ELECT, CHIP 47uF 20% 16V
C104	1-163-037-11	s	CERAMIC, CHIP 0.022uF 10% 25V
C105	1-163-037-11	s	CERAMIC, CHIP 0.022uF 10% 25V
C106	1-163-037-11	s	CERAMIC, CHIP 0.022uF 10% 25V
C107	1-163-037-11	s	CERAMIC, CHIP 0.022uF 10% 25V
C108	1-163-235-11	s	CERAMIC, CHIP 22pF 5% 50V
C109	1-163-037-11	s	CERAMIC, CHIP 0.022uF 10% 25V
C110	1-164-004-11	s	CERAMIC, CHIP 0.1uF 10% 25V
C111	1-164-004-11	s	CERAMIC, CHIP 0.1uF 10% 25V

(IO-149/149A BOARD; Suffix -13)

Ref. No. or Q'ty	Part No.	SP	Description
C112	1-163-275-11	s	CERAMIC, CHIP 0.001uF 5% 50V
C113	1-163-275-11	s	CERAMIC, CHIP 0.001uF 5% 50V
C114	1-164-004-11	s	CERAMIC, CHIP 0.1uF 10% 25V
C115	1-164-004-11	s	CERAMIC, CHIP 0.1uF 10% 25V
C116	1-163-275-11	s	CERAMIC, CHIP 0.001uF 5% 50V
C117	1-163-275-11	s	CERAMIC, CHIP 0.001uF 5% 50V
C118	1-163-237-11	s	CERAMIC, CHIP 27pF 5% 50V
C119	1-163-237-11	s	CERAMIC, CHIP 27pF 5% 50V
C120	1-163-037-11	s	CERAMIC, CHIP 0.022uF 10% 25V
C121	1-163-037-11	s	CERAMIC, CHIP 0.022uF 10% 25V
C122	1-163-037-11	s	CERAMIC, CHIP 0.022uF 10% 25V
C123	1-164-004-11	s	CERAMIC, CHIP 0.1uF 10% 25V
C124	1-163-037-11	s	CERAMIC, CHIP 0.022uF 10% 25V
C125	1-126-392-11	s	ELECT, CHIP 100uF 20% 6.3V
C126	1-163-275-11	s	CERAMIC, CHIP 0.001uF 5% 50V
C127	1-164-004-11	s	CERAMIC, CHIP 0.1uF 10% 25V
C128	1-163-037-11	s	CERAMIC, CHIP 0.022uF 10% 25V
C129	1-163-037-11	s	CERAMIC, CHIP 0.022uF 10% 25V
C130	1-163-275-11	s	CERAMIC, CHIP 0.001uF 5% 50V
C131	1-163-037-11	s	CERAMIC, CHIP 0.022uF 10% 25V
C132	1-163-037-11	s	CERAMIC, CHIP 0.022uF 10% 25V
C133	1-163-237-11	s	CERAMIC, CHIP 27pF 5% 50V
C134	1-126-394-11	s	ELECT, CHIP 10uF 20% 16V
C135	1-126-394-11	s	ELECT, CHIP 10uF 20% 16V
C136	1-163-037-11	s	CERAMIC, CHIP 0.022uF 10% 25V
C137	1-163-037-11	s	CERAMIC, CHIP 0.022uF 10% 25V
C138	1-163-037-11	s	CERAMIC, CHIP 0.022uF 10% 25V
C139	1-163-037-11	s	CERAMIC, CHIP 0.022uF 10% 25V
C140	1-163-037-11	s	CERAMIC, CHIP 0.022uF 10% 25V
C141	1-163-037-11	s	CERAMIC, CHIP 0.022uF 10% 25V
C142	1-126-392-11	s	ELECT, CHIP 100uF 20% 6.3V
C143	1-126-392-11	s	ELECT, CHIP 100uF 20% 6.3V
C144	1-163-037-11	s	CERAMIC, CHIP 0.022uF 10% 25V
C145	1-163-037-11	s	CERAMIC, CHIP 0.022uF 10% 25V
C146	1-163-037-11	s	CERAMIC, CHIP 0.022uF 10% 25V
C147	1-163-037-11	s	CERAMIC, CHIP 0.022uF 10% 25V
C148	1-163-037-11	s	CERAMIC, CHIP 0.022uF 10% 25V
C149	1-163-037-11	s	CERAMIC, CHIP 0.022uF 10% 25V
C150	1-163-037-11	s	CERAMIC, CHIP 0.022uF 10% 25V
C151	1-163-037-11	s	CERAMIC, CHIP 0.022uF 10% 25V
C152	1-163-037-11	s	CERAMIC, CHIP 0.022uF 10% 25V
C153	1-126-391-11	s	ELECT, CHIP 47uF 20% 6.3V
C154	1-163-231-11	s	CERAMIC, CHIP 15pF 5% 50V
C155	1-163-037-11	s	CERAMIC, CHIP 0.022uF 10% 25V
C156	1-163-038-91	s	CERAMIC, CHIP 0.1uF 25V
C157	1-163-037-11	s	CERAMIC, CHIP 0.022uF 10% 25V
C158	1-163-037-11	s	CERAMIC, CHIP 0.022uF 10% 25V
C159	1-163-038-91	s	CERAMIC, CHIP 0.1uF 25V
C160	1-163-037-11	s	CERAMIC, CHIP 0.022uF 10% 25V
C161	1-163-037-11	s	CERAMIC, CHIP 0.022uF 10% 25V
C162	1-163-038-91	s	CERAMIC, CHIP 0.1uF 25V
C163	1-163-038-91	s	CERAMIC, CHIP 0.1uF 25V
C164	1-163-038-91	s	CERAMIC, CHIP 0.1uF 25V
C165	1-126-391-11	s	ELECT, CHIP 47uF 20% 6.3V
C166	1-163-037-11	s	CERAMIC, CHIP 0.022uF 10% 25V
C167	1-126-391-11	s	ELECT, CHIP 47uF 20% 6.3V
C168	1-163-037-11	s	CERAMIC, CHIP 0.022uF 10% 25V
C169	1-163-037-11	s	CERAMIC, CHIP 0.022uF 10% 25V
C170	1-163-037-11	s	CERAMIC, CHIP 0.022uF 10% 25V

(IO-149/149A BOARD; Suffix -13)

Ref. No. or Q'ty	Part No.	SP	Description
C171	1-126-391-11	s	ELECT, CHIP 47uF 20% 6.3V
C172	1-126-396-11	s	ELECT, CHIP 47uF 20% 16V
C173	1-126-396-11	s	ELECT, CHIP 47uF 20% 16V
C174	1-126-391-11	s	ELECT, CHIP 47uF 20% 6.3V
C175	1-126-391-11	s	ELECT, CHIP 47uF 20% 6.3V
C176	1-126-391-11	s	ELECT, CHIP 47uF 20% 6.3V
C177	1-126-391-11	s	ELECT, CHIP 47uF 20% 6.3V
C178	1-126-391-11	s	ELECT, CHIP 47uF 20% 6.3V
C179	1-163-037-11	s	CERAMIC, CHIP 0.022uF 10% 25V
C180	1-163-037-11	s	CERAMIC, CHIP 0.022uF 10% 25V
C181	1-163-037-11	s	CERAMIC, CHIP 0.022uF 10% 25V
C182	1-163-037-11	s	CERAMIC, CHIP 0.022uF 10% 25V
C183	1-163-037-11	s	CERAMIC, CHIP 0.022uF 10% 25V
C184	1-163-037-11	s	CERAMIC, CHIP 0.022uF 10% 25V
C185	1-163-037-11	s	CERAMIC, CHIP 0.022uF 10% 25V
C186	1-163-037-11	s	CERAMIC, CHIP 0.022uF 10% 25V
C187	1-163-037-11	s	CERAMIC, CHIP 0.022uF 10% 25V
C188	1-163-235-11	s	CERAMIC, CHIP 22pF 5% 50V[For NTSC]
C189	1-163-235-11	s	CERAMIC, CHIP 22pF 5% 50V[For NTSC]
C190	1-163-231-11	s	CERAMIC, CHIP 15pF 5% 50V *1)
	1-163-099-00	s	CERAMIC, CHIP 18pF 5% 50V *2) [For NTSC]
C190	1-163-099-00	s	CERAMIC, CHIP 18pF 5% 50V *1)
	1-163-231-11	s	CERAMIC, CHIP 15pF 5% 50V *2) [For PAL]
C191	1-163-037-11	s	CERAMIC, CHIP 0.022uF 10% 25V
C192	1-163-037-11	s	CERAMIC, CHIP 0.022uF 10% 25V
C193	1-163-037-11	s	CERAMIC, CHIP 0.022uF 10% 25V
C194	1-126-401-11	s	ELECT, CHIP 1uF 20% 50V
C195	1-126-401-11	s	ELECT, CHIP 1uF 20% 50V
C196	1-126-394-11	s	ELECT, CHIP 10uF 20% 16V
C197	1-126-401-11	s	ELECT, CHIP 1uF 20% 50V
C198	1-126-394-11	s	ELECT, CHIP 10uF 20% 16V
C199	1-163-038-91	s	CERAMIC, CHIP 0.1uF 25V
C200	1-126-401-11	s	ELECT, CHIP 1uF 20% 50V
C201	1-163-038-91	s	CERAMIC, CHIP 0.1uF 25V
C202	1-163-809-11	s	CERAMIC, CHIP 0.047uF 10% 25V
C203	1-163-809-11	s	CERAMIC, CHIP 0.047uF 10% 25V
C204	1-163-809-11	s	CERAMIC, CHIP 0.047uF 10% 25V
C205	1-163-227-11	s	CERAMIC, CHIP 10pF 5% 50V
C206	1-163-037-11	s	CERAMIC, CHIP 0.022uF 10% 25V
C207	1-163-037-11	s	CERAMIC, CHIP 0.022uF 10% 25V
C208	1-163-037-11	s	CERAMIC, CHIP 0.022uF 10% 25V
C209	1-163-037-11	s	CERAMIC, CHIP 0.022uF 10% 25V
C210	1-163-037-11	s	CERAMIC, CHIP 0.022uF 10% 25V
C211	1-126-396-11	s	ELECT, CHIP 47uF 20% 16V
C212	1-163-037-11	s	CERAMIC, CHIP 0.022uF 10% 25V
C213	1-163-235-11	s	CERAMIC, CHIP 22pF 5% 50V
C214	1-163-037-11	s	CERAMIC, CHIP 0.022uF 10% 25V
C215	1-126-396-11	s	ELECT, CHIP 47uF 20% 16V
C216	1-163-037-11	s	CERAMIC, CHIP 0.022uF 10% 25V
C217	1-126-390-11	s	ELECT, CHIP 22uF 20% 6.3V
C218	1-163-037-11	s	CERAMIC, CHIP 0.022uF 10% 25V
C219	1-163-037-11	s	CERAMIC, CHIP 0.022uF 10% 25V
C220	1-163-249-11	s	CERAMIC, CHIP 82pF 5% 50V[For NTSC]
C220	1-163-251-11	s	CERAMIC, CHIP 100pF 5% 50V[For PAL]
C221	1-163-243-11	s	CERAMIC, CHIP 47pF 5% 50V

(IO-149/149A BOARD; Suffix -13)

Ref. No. or Q'ty	Part No.	SP	Description
C222	1-163-227-11	s	CERAMIC, CHIP 10pF 5% 50V
C223	1-163-118-00	s	CERAMIC, CHIP 110pF 5% 50V [For NTSC]
C223	1-163-121-00	s	CERAMIC, CHIP 150pF 5% 50V[For PAL]
C224	1-163-037-11	s	CERAMIC, CHIP 0.022uF 10% 25V
C225	1-163-224-11	s	CERAMIC, CHIP 7pF 50V [For NTSC]
C225	1-163-087-00	s	CERAMIC, CHIP 4pF 50V [For PAL]
C226	1-163-037-11	s	CERAMIC, CHIP 0.022uF 10% 25V
C228	1-163-231-11	s	CERAMIC, CHIP 15pF 5% 50V[For NTSC]
C228	1-163-231-11	s	CERAMIC, CHIP 15pF 5% 50V [For PAL]
C229	1-163-259-91	s	CERAMIC, CHIP 220pF 5% 50V
C230	1-126-390-11	s	ELECT, CHIP 22uF 20% 6.3V
C231	1-163-037-11	s	CERAMIC, CHIP 0.022uF 10% 25V
C232	1-163-037-11	s	CERAMIC, CHIP 0.022uF 10% 25V
C233	1-163-037-11	s	CERAMIC, CHIP 0.022uF 10% 25V
C234	1-163-037-11	s	CERAMIC, CHIP 0.022uF 10% 25V
C235	1-163-227-11	s	CERAMIC, CHIP 10pF 5% 50V
C301	1-126-391-11	s	ELECT, CHIP 47uF 20% 6.3V
C302	1-126-391-11	s	ELECT, CHIP 47uF 20% 6.3V
C303	1-163-038-91	s	CERAMIC, CHIP 0.1uF 25V
C304	1-126-391-11	s	ELECT, CHIP 47uF 20% 6.3V
C305	1-126-391-11	s	ELECT, CHIP 47uF 20% 6.3V
C306	1-163-038-91	s	CERAMIC, CHIP 0.1uF 25V
C307	1-163-038-91	s	CERAMIC, CHIP 0.1uF 25V
C308	1-163-038-91	s	CERAMIC, CHIP 0.1uF 25V
C309	1-163-231-11	s	CERAMIC, CHIP 15pF 5% 50V[For NTSC]
C309	1-163-231-11	s	CERAMIC, CHIP 15pF 5% 50V [For PAL]
C310	1-163-037-11	s	CERAMIC, CHIP 0.022uF 10% 25V
C311	1-163-120-00	s	CERAMIC, CHIP 130pF 5% 50V [For NTSC]
C311	1-163-259-91	s	CERAMIC, CHIP 220pF 5% 50V[For PAL]
C312	1-163-037-11	s	CERAMIC, CHIP 0.022uF 10% 25V
C313	1-163-038-91	s	CERAMIC, CHIP 0.1uF 25V
C314	1-163-038-91	s	CERAMIC, CHIP 0.1uF 25V
C315	1-163-037-11	s	CERAMIC, CHIP 0.022uF 10% 25V
C316	1-163-037-11	s	CERAMIC, CHIP 0.022uF 10% 25V
C317	1-163-037-11	s	CERAMIC, CHIP 0.022uF 10% 25V
C318	1-163-231-11	s	CERAMIC, CHIP 15pF 5% 50V[For NTSC]
C318	1-163-231-11	s	CERAMIC, CHIP 15pF 5% 50V [For PAL]
C319	1-163-120-00	s	CERAMIC, CHIP 130pF 5% 50V [For NTSC]
C319	1-163-259-91	s	CERAMIC, CHIP 220pF 5% 50V[For PAL]
C320	1-163-037-11	s	CERAMIC, CHIP 0.022uF 10% 25V
C321	1-126-391-11	s	ELECT, CHIP 47uF 20% 6.3V
C324	1-163-038-91	s	CERAMIC, CHIP 0.1uF 25V
C326	1-126-396-11	s	ELECT, CHIP 47uF 20% 16V
C327	1-126-391-11	s	ELECT, CHIP 47uF 20% 6.3V
C328	1-163-037-11	s	CERAMIC, CHIP 0.022uF 10% 25V
C329	1-126-396-11	s	ELECT, CHIP 47uF 20% 16V
C330	1-163-037-11	s	CERAMIC, CHIP 0.022uF 10% 25V
C331	1-126-396-11	s	ELECT, CHIP 47uF 20% 16V
C332	1-163-038-91	s	CERAMIC, CHIP 0.1uF 25V
C333	1-163-038-91	s	CERAMIC, CHIP 0.1uF 25V
C334	1-163-224-11	s	CERAMIC, CHIP 7pF 50V [For NTSC]
C334	1-163-222-11	s	CERAMIC, CHIP 5pF 50V [For PAL]
C335	1-163-231-11	s	CERAMIC, CHIP 15pF 5% 50V[For NTSC]

(IO-149/149A BOARD; Suffix -13)

Ref. No. or Q'ty	Part No.	SP	Description
C336	1-163-037-11	s	CERAMIC, CHIP 0.022uF 10% 25V
C337	1-163-231-11	s	CERAMIC, CHIP 15pF 5% 50V
C338	1-163-038-91	s	CERAMIC, CHIP 0.1uF 25V
C339	1-163-243-11	s	CERAMIC, CHIP 47pF 5% 50V
C340	1-163-243-11	s	CERAMIC, CHIP 47pF 5% 50V
C341	1-163-239-11	s	CERAMIC, CHIP 33pF 5% 50V
C342	1-163-239-11	s	CERAMIC, CHIP 33pF 5% 50V
C343	1-126-392-11	s	ELECT, CHIP 100uF 20% 6.3V
C344	1-163-235-11	s	CERAMIC, CHIP 22pF 5% 50V[For NTSC]
C344	1-163-237-11	s	CERAMIC, CHIP 27pF 5% 50V [For PAL]
C345	1-163-235-11	s	CERAMIC, CHIP 22pF 5% 50V[For NTSC]
C345	1-163-237-11	s	CERAMIC, CHIP 27pF 5% 50V [For PAL]
C346	1-126-394-11	s	ELECT, CHIP 10uF 20% 16V
C347	1-126-394-11	s	ELECT, CHIP 10uF 20% 16V
C348	1-126-391-11	s	ELECT, CHIP 47uF 20% 6.3V
C349	1-163-809-11	s	CERAMIC, CHIP 0.047uF 10% 25V
C350	1-126-391-11	s	ELECT, CHIP 47uF 20% 6.3V
C351	1-163-038-91	s	CERAMIC, CHIP 0.1uF 25V
C352	1-163-037-11	s	CERAMIC, CHIP 0.022uF 10% 25V
C353	1-163-037-11	s	CERAMIC, CHIP 0.022uF 10% 25V
C354	1-163-038-91	s	CERAMIC, CHIP 0.1uF 25V
C355	1-163-227-11	s	CERAMIC, CHIP 10pF 5% 50V
C356	1-163-037-11	s	CERAMIC, CHIP 0.022uF 10% 25V
C357	1-163-037-11	s	CERAMIC, CHIP 0.022uF 10% 25V
C358	1-163-037-11	s	CERAMIC, CHIP 0.022uF 10% 25V
C359	1-163-038-91	s	CERAMIC, CHIP 0.1uF 25V
C360	1-163-038-91	s	CERAMIC, CHIP 0.1uF 25V
C361	1-163-038-91	s	CERAMIC, CHIP 0.1uF 25V
C362	1-163-243-11	s	CERAMIC, CHIP 47pF 5% 50V[For NTSC]
C362	1-163-237-11	s	CERAMIC, CHIP 27pF 5% 50V [For PAL]
C363	1-163-037-11	s	CERAMIC, CHIP 0.022uF 10% 25V
C364	1-163-037-11	s	CERAMIC, CHIP 0.022uF 10% 25V
C365	1-163-222-11	s	CERAMIC, CHIP 5pF 50V
C366	1-163-037-11	s	CERAMIC, CHIP 0.022uF 10% 25V
C367	1-163-243-11	s	CERAMIC, CHIP 47pF 5% 50V
C368	1-163-037-11	s	CERAMIC, CHIP 0.022uF 10% 25V
C369	1-163-037-11	s	CERAMIC, CHIP 0.022uF 10% 25V
C370	1-163-037-11	s	CERAMIC, CHIP 0.022uF 10% 25V
C371	1-163-037-11	s	CERAMIC, CHIP 0.022uF 10% 25V
C372	1-163-037-11	s	CERAMIC, CHIP 0.022uF 10% 25V
C373	1-126-391-11	s	ELECT, CHIP 47uF 20% 6.3V
C374	1-163-037-11	s	CERAMIC, CHIP 0.022uF 10% 25V
C375	1-163-037-11	s	CERAMIC, CHIP 0.022uF 10% 25V
C376	1-163-037-11	s	CERAMIC, CHIP 0.022uF 10% 25V
C377	1-126-391-11	s	ELECT, CHIP 47uF 20% 6.3V
C378	1-126-396-11	s	ELECT, CHIP 47uF 20% 16V
C379	1-163-037-11	s	CERAMIC, CHIP 0.022uF 10% 25V
C380	1-163-037-11	s	CERAMIC, CHIP 0.022uF 10% 25V
C381	1-163-227-11	s	CERAMIC, CHIP 10pF 5% 50V
C382	1-163-037-11	s	CERAMIC, CHIP 0.022uF 10% 25V
C383	1-163-227-11	s	CERAMIC, CHIP 10pF 5% 50V
C384	1-163-037-11	s	CERAMIC, CHIP 0.022uF 10% 25V
C385	1-163-038-91	s	CERAMIC, CHIP 0.1uF 25V
C386	1-163-038-91	s	CERAMIC, CHIP 0.1uF 25V
C387	1-163-037-11	s	CERAMIC, CHIP 0.022uF 10% 25V
C388	1-163-245-11	s	CERAMIC, CHIP 56pF 5% 50V *1)
	1-163-113-00	s	CERAMIC, CHIP 68pF 5% 50V *2)

(IO-149/149A BOARD; Suffix -13)

Ref. No. or Q'ty	Part No.	SP	Description
C501	1-163-235-11	s	CERAMIC, CHIP 22pF 5% 50V[For NTSC]
C501	1-163-239-11	s	CERAMIC, CHIP 33pF 5% 50V [For PAL]
C502	1-163-038-91	s	CERAMIC, CHIP 0.1uF 25V
C503	1-126-394-11	s	ELECT, CHIP 10uF 20% 16V
C504	1-126-394-11	s	ELECT, CHIP 10uF 20% 16V
C505	1-126-394-11	s	ELECT, CHIP 10uF 20% 16V
C506	1-163-037-11	s	CERAMIC, CHIP 0.022uF 10% 25V
C507	1-126-396-11	s	ELECT, CHIP 47uF 20% 16V
C508	1-126-396-11	s	ELECT, CHIP 47uF 20% 16V
C509	1-126-394-11	s	ELECT, CHIP 10uF 20% 16V
C510	1-126-394-11	s	ELECT, CHIP 10uF 20% 16V
C511	1-126-401-11	s	ELECT, CHIP 1uF 20% 50V
C512	1-163-235-11	s	CERAMIC, CHIP 22pF 5% 50V
C513	1-164-222-11	s	CERAMIC, CHIP 0.22uF 25V
C514	1-163-038-91	s	CERAMIC, CHIP 0.1uF 25V
C515	1-163-038-91	s	CERAMIC, CHIP 0.1uF 25V
C516	1-163-121-00	s	CERAMIC, CHIP 150pF 5% 50V [For NTSC]
C516	1-163-259-91	s	CERAMIC, CHIP 220pF 5% 50V[For PAL]
C517	1-164-232-11	s	CERAMIC, CHIP 0.01uF 10% 100V
C518	1-163-037-11	s	CERAMIC, CHIP 0.022uF 10% 25V
C519	1-163-038-91	s	CERAMIC, CHIP 0.1uF 25V
C520	1-163-038-91	s	CERAMIC, CHIP 0.1uF 25V
C521	1-126-396-11	s	ELECT, CHIP 47uF 20% 16V
C522	1-126-393-11	s	ELECT, CHIP 33uF 20% 10V
C523	1-163-038-91	s	CERAMIC, CHIP 0.1uF 25V
C524	1-163-239-11	s	CERAMIC, CHIP 33pF 5% 50V
C525	1-163-259-91	s	CERAMIC, CHIP 220pF 5% 50V
C526	1-163-038-91	s	CERAMIC, CHIP 0.1uF 25V
C527	1-163-037-11	s	CERAMIC, CHIP 0.022uF 10% 25V
C528	1-163-038-91	s	CERAMIC, CHIP 0.1uF 25V
C529	1-163-037-11	s	CERAMIC, CHIP 0.022uF 10% 25V
C530	1-163-038-91	s	CERAMIC, CHIP 0.1uF 25V
C531	1-163-038-91	s	CERAMIC, CHIP 0.1uF 25V
C532	1-163-038-91	s	CERAMIC, CHIP 0.1uF 25V
C533	1-163-038-91	s	CERAMIC, CHIP 0.1uF 25V
C534	1-126-391-11	s	ELECT, CHIP 47uF 20% 6.3V
C535	1-163-038-91	s	CERAMIC, CHIP 0.1uF 25V
C536	1-163-038-91	s	CERAMIC, CHIP 0.1uF 25V
C537	1-163-989-11	s	CERAMIC, CHIP 0.033uF 10% 25V
C538	1-163-121-00	s	CERAMIC, CHIP 150pF 5% 50V
C539	1-163-038-91	s	CERAMIC, CHIP 0.1uF 25V
C540	1-163-038-91	s	CERAMIC, CHIP 0.1uF 25V
C541	1-163-038-91	s	CERAMIC, CHIP 0.1uF 25V
C543	1-126-391-11	s	ELECT, CHIP 47uF 20% 6.3V
C544	1-126-391-11	s	ELECT, CHIP 47uF 20% 6.3V
C545	1-163-038-91	s	CERAMIC, CHIP 0.1uF 25V
C546	1-163-239-11	s	CERAMIC, CHIP 33pF 5% 50V[For NTSC]
C546	1-163-235-11	s	CERAMIC, CHIP 22pF 5% 50V [For PAL]
C547	1-163-037-11	s	CERAMIC, CHIP 0.022uF 10% 25V
C548	1-163-038-91	s	CERAMIC, CHIP 0.1uF 25V
C549	1-126-391-11	s	ELECT, CHIP 47uF 20% 6.3V
C550	1-163-251-11	s	CERAMIC, CHIP 100pF 5% 50V
C551	1-163-037-11	s	CERAMIC, CHIP 0.022uF 10% 25V
C552	1-163-038-91	s	CERAMIC, CHIP 0.1uF 25V
C553	1-163-038-91	s	CERAMIC, CHIP 0.1uF 25V
C601	1-163-037-11	s	CERAMIC, CHIP 0.022uF 10% 25V
C602	1-163-037-11	s	CERAMIC, CHIP 0.022uF 10% 25V

(IO-149/149A BOARD; Suffix -13)

Ref. No. or Q'ty	Part No.	SP	Description
C603	1-163-037-11	s	CERAMIC, CHIP 0.022uF 10% 25V
C604	1-163-275-11	s	CERAMIC, CHIP 0.001uF 5% 50V
C605	1-126-401-11	s	ELECT, CHIP 1uF 20% 50V
C606	1-126-404-11	s	ELECT 4.7uF 20% 50V
C607	1-164-232-11	s	CERAMIC, CHIP 0.01uF 10% 100V
C608	1-163-037-11	s	CERAMIC, CHIP 0.022uF 10% 25V
C609	1-163-037-11	s	CERAMIC, CHIP 0.022uF 10% 25V
C610	1-163-259-91	s	CERAMIC, CHIP 220pF 5% 50V
C611	1-163-037-11	s	CERAMIC, CHIP 0.022uF 10% 25V [For NTSC]
C611	1-164-004-11	s	CERAMIC, CHIP 0.1uF 10% 25V [For PAL]
C612	1-163-227-11	s	CERAMIC, CHIP 10pF 5% 50V
C613	1-163-239-11	s	CERAMIC, CHIP 33pF 5% 50V[For NTSC]
C613	1-163-106-00	s	CERAMIC, CHIP 36pF 5% 50V[For PAL]
C614	1-163-243-11	s	CERAMIC, CHIP 47pF 5% 50V
C615	1-163-113-00	s	CERAMIC, CHIP 68pF 5% 50V[For NTSC]
C615	1-163-113-00	s	CERAMIC, CHIP 68pF 5% 50V[For PAL]
C616	1-164-232-11	s	CERAMIC, CHIP 0.01uF 10% 100V
C617	1-163-121-00	s	CERAMIC, CHIP 150pF 5% 50V
C618	1-164-232-11	s	CERAMIC, CHIP 0.01uF 10% 100V
C619	1-163-263-11	s	CERAMIC, CHIP 330pF 5% 50V
C620	1-163-809-11	s	CERAMIC, CHIP 0.047uF 10% 25V
C621	1-163-809-11	s	CERAMIC, CHIP 0.047uF 10% 25V
C622	1-163-038-91	s	CERAMIC, CHIP 0.1uF 25V
C623	1-163-038-91	s	CERAMIC, CHIP 0.1uF 25V
C624	1-163-038-91	s	CERAMIC, CHIP 0.1uF 25V
C625	1-163-037-11	s	CERAMIC, CHIP 0.022uF 10% 25V
C626	1-163-227-11	s	CERAMIC, CHIP 10pF 5% 50V
C627	1-126-391-11	s	ELECT, CHIP 47uF 20% 6.3V
C628	1-163-037-11	s	CERAMIC, CHIP 0.022uF 10% 25V
C629	1-126-391-11	s	ELECT, CHIP 47uF 20% 6.3V
C631	1-163-227-11	s	CERAMIC, CHIP 10pF 5% 50V
C632	1-126-401-11	s	ELECT, CHIP 1uF 20% 50V
C633	1-163-037-11	s	CERAMIC, CHIP 0.022uF 10% 25V
C634	1-163-243-11	s	CERAMIC, CHIP 47pF 5% 50V
C635	1-163-037-11	s	CERAMIC, CHIP 0.022uF 10% 25V
C636	1-163-037-11	s	CERAMIC, CHIP 0.022uF 10% 25V
C637	1-163-037-11	s	CERAMIC, CHIP 0.022uF 10% 25V
C638	1-163-038-91	s	CERAMIC, CHIP 0.1uF 25V
C639	1-163-235-11	s	CERAMIC, CHIP 22pF 5% 50V[For NTSC]
C639	1-163-099-00	s	CERAMIC, CHIP 18pF 5% 50V [For PAL]
C640	1-163-037-11	s	CERAMIC, CHIP 0.022uF 10% 25V
C641	1-163-038-91	s	CERAMIC, CHIP 0.1uF 25V
C642	1-163-037-11	s	CERAMIC, CHIP 0.022uF 10% 25V
C643	1-163-243-11	s	CERAMIC, CHIP 47pF 5% 50V
C644	1-163-037-11	s	CERAMIC, CHIP 0.022uF 10% 25V
C645	1-126-393-11	s	ELECT, CHIP 33uF 20% 10V
C646	1-163-037-11	s	CERAMIC, CHIP 0.022uF 10% 25V
C647	1-163-037-11	s	CERAMIC, CHIP 0.022uF 10% 25V
C648	1-163-037-11	s	CERAMIC, CHIP 0.022uF 10% 25V
C649	1-163-037-11	s	CERAMIC, CHIP 0.022uF 10% 25V
C650	1-126-393-11	s	ELECT, CHIP 33uF 20% 10V
C651	1-163-037-11	s	CERAMIC, CHIP 0.022uF 10% 25V
C652	1-163-237-11	s	CERAMIC, CHIP 27pF 5% 50V[For NTSC]
C652	1-163-239-11	s	CERAMIC, CHIP 33pF 5% 50V [For PAL]
C653	1-163-237-11	s	CERAMIC, CHIP 27pF 5% 50V[For NTSC]

(IO-149/149A BOARD; Suffix -13)

Ref. No. or Q'ty	Part No.	SP	Description
C653	1-163-239-11	s	CERAMIC, CHIP 33pF 5% 50V [For PAL]
C654	1-163-113-00	s	CERAMIC, CHIP 68pF 5% 50V [For PAL]
C654	1-163-245-11	s	CERAMIC, CHIP 56pF 5% 50V[For NTSC]
C655	1-163-245-11	s	CERAMIC, CHIP 56pF 5% 50V[For NTSC]
C655	1-163-113-00	s	CERAMIC, CHIP 68pF 5% 50V [For PAL]
C656	1-163-237-11	s	CERAMIC, CHIP 27pF 5% 50V[For NTSC]
C656	1-163-239-11	s	CERAMIC, CHIP 33pF 5% 50V [For PAL]
C657	1-163-239-11	s	CERAMIC, CHIP 33pF 5% 50V [For PAL]
C657	1-163-237-11	s	CERAMIC, CHIP 27pF 5% 50V[For NTSC]
C658	1-163-037-11	s	CERAMIC, CHIP 0.022uF 10% 25V
C659	1-163-037-11	s	CERAMIC, CHIP 0.022uF 10% 25V
C660	1-163-037-11	s	CERAMIC, CHIP 0.022uF 10% 25V
C661	1-163-037-11	s	CERAMIC, CHIP 0.022uF 10% 25V
C663	1-163-133-00	s	CERAMIC, CHIP 470pF 5% 50V
C701	1-126-392-11	s	ELECT, CHIP 100uF 20% 6.3V
C702	1-126-392-11	s	ELECT, CHIP 100uF 20% 6.3V
C703	1-126-392-11	s	ELECT, CHIP 100uF 20% 6.3V
C704	1-163-037-11	s	CERAMIC, CHIP 0.022uF 10% 25V
C705	1-163-037-11	s	CERAMIC, CHIP 0.022uF 10% 25V
C706	1-163-037-11	s	CERAMIC, CHIP 0.022uF 10% 25V
C707	1-163-038-91	s	CERAMIC, CHIP 0.1uF 25V
C708	1-163-038-91	s	CERAMIC, CHIP 0.1uF 25V
C709	1-126-401-11	s	ELECT, CHIP 1uF 20% 50V
C710	1-163-275-11	s	CERAMIC, CHIP 0.001uF 5% 50V
C711	1-126-392-11	s	ELECT, CHIP 100uF 20% 6.3V
C712	1-163-243-11	s	CERAMIC, CHIP 47pF 5% 50V
C713	1-163-275-11	s	CERAMIC, CHIP 0.001uF 5% 50V
C714	1-126-393-11	s	ELECT, CHIP 33uF 20% 10V
C715	1-163-037-11	s	CERAMIC, CHIP 0.022uF 10% 25V
C716	1-126-392-11	s	ELECT, CHIP 100uF 20% 6.3V
C717	1-126-392-11	s	ELECT, CHIP 100uF 20% 6.3V
C718	1-163-037-11	s	CERAMIC, CHIP 0.022uF 10% 25V
C719	1-126-396-11	s	ELECT, CHIP 47uF 20% 16V
C720	1-163-037-11	s	CERAMIC, CHIP 0.022uF 10% 25V
C721	1-126-392-11	s	ELECT, CHIP 100uF 20% 6.3V
C722	1-163-275-11	s	CERAMIC, CHIP 0.001uF 5% 50V [For NTSC]
C723	1-163-038-91	s	CERAMIC, CHIP 0.1uF 25V
C724	1-126-396-11	s	ELECT, CHIP 47uF 20% 16V
C725	1-126-396-11	s	ELECT, CHIP 47uF 20% 16V
C726	1-163-251-11	s	CERAMIC, CHIP 100pF 5% 50V
C727	1-126-396-11	s	ELECT, CHIP 47uF 20% 16V
C728	1-126-396-11	s	ELECT, CHIP 47uF 20% 16V
C729	1-163-251-11	s	CERAMIC, CHIP 100pF 5% 50V
C730	1-126-392-11	s	ELECT, CHIP 100uF 20% 6.3V
C731	1-163-037-11	s	CERAMIC, CHIP 0.022uF 10% 25V
C732	1-126-392-11	s	ELECT, CHIP 100uF 20% 6.3V
C733	1-163-037-11	s	CERAMIC, CHIP 0.022uF 10% 25V
C735	1-126-401-11	s	ELECT, CHIP 1uF 20% 50V
C736	1-163-037-11	s	CERAMIC, CHIP 0.022uF 10% 25V
C737	1-163-037-11	s	CERAMIC, CHIP 0.022uF 10% 25V
C738	1-126-397-11	s	ELECT, CHIP 33uF 20% 25V [For NTSC]
C739	1-163-037-11	s	CERAMIC, CHIP 0.022uF 10% 25V
C740	1-126-401-11	s	ELECT, CHIP 1uF 20% 50V [For NTSC]
C741	1-126-401-11	s	ELECT, CHIP 1uF 20% 50V [For NTSC]
C742	1-126-396-11	s	ELECT, CHIP 47uF 20% 16V
C743	1-163-145-00	s	CERAMIC, CHIP 0.0015uF 5% 50V

(IO-149/149A BOARD; Suffix -13)

Ref. No. or Q'ty	Part No.	SP	Description
			[For NTSC]
C744	1-164-232-11	s	CERAMIC, CHIP 0.01uF 10% 100V [For NTSC]
C745	1-126-392-11	s	ELECT, CHIP 100uF 20% 6.3V
C746	1-126-392-11	s	ELECT, CHIP 100uF 20% 6.3V
C747	1-164-232-11	s	CERAMIC, CHIP 0.01uF 10% 100V [For NTSC]
C748	1-163-037-11	s	CERAMIC, CHIP 0.022uF 10% 25V
C749	1-163-037-11	s	CERAMIC, CHIP 0.022uF 10% 25V
C750	1-126-391-11	s	ELECT, CHIP 47uF 20% 6.3V
C751	1-126-391-11	s	ELECT, CHIP 47uF 20% 6.3V
C752	1-163-037-11	s	CERAMIC, CHIP 0.022uF 10% 25V [For NTSC]
C753	1-126-394-11	s	ELECT, CHIP 10uF 20% 16V
C755	1-163-037-11	s	CERAMIC, CHIP 0.022uF 10% 25V
C901	1-163-038-91	s	CERAMIC, CHIP 0.1uF 25V
C902	1-126-392-11	s	ELECT, CHIP 100uF 20% 6.3V
C903	1-163-239-11	s	CERAMIC, CHIP 33pF 5% 50V
C904	1-163-037-11	s	CERAMIC, CHIP 0.022uF 10% 25V
C905	1-163-037-11	s	CERAMIC, CHIP 0.022uF 10% 25V
C906	1-163-037-11	s	CERAMIC, CHIP 0.022uF 10% 25V
C907	1-163-037-11	s	CERAMIC, CHIP 0.022uF 10% 25V
C908	1-163-037-11	s	CERAMIC, CHIP 0.022uF 10% 25V
C909	1-163-037-11	s	CERAMIC, CHIP 0.022uF 10% 25V
C911	1-163-037-11	s	CERAMIC, CHIP 0.022uF 10% 25V
C914	1-163-037-11	s	CERAMIC, CHIP 0.022uF 10% 25V
C915	1-163-037-11	s	CERAMIC, CHIP 0.022uF 10% 25V
C916	1-126-392-11	s	ELECT, CHIP 100uF 20% 6.3V
C917	1-163-037-11	s	CERAMIC, CHIP 0.022uF 10% 25V
C918	1-163-037-11	s	CERAMIC, CHIP 0.022uF 10% 25V
C919	1-163-037-11	s	CERAMIC, CHIP 0.022uF 10% 25V
C920	1-163-037-11	s	CERAMIC, CHIP 0.022uF 10% 25V
C921	1-163-037-11	s	CERAMIC, CHIP 0.022uF 10% 25V
C922	1-126-392-11	s	ELECT, CHIP 100uF 20% 6.3V
C923	1-163-038-91	s	CERAMIC, CHIP 0.1uF 25V
C924	1-163-038-91	s	CERAMIC, CHIP 0.1uF 25V
C925	1-163-037-11	s	CERAMIC, CHIP 0.022uF 10% 25V
C926	1-163-037-11	s	CERAMIC, CHIP 0.022uF 10% 25V
C927	1-163-038-91	s	CERAMIC, CHIP 0.1uF 25V
C928	1-163-037-11	s	CERAMIC, CHIP 0.022uF 10% 25V
C929	1-163-038-91	s	CERAMIC, CHIP 0.1uF 25V
C930	1-163-037-11	s	CERAMIC, CHIP 0.022uF 10% 25V
C931	1-163-037-11	s	CERAMIC, CHIP 0.022uF 10% 25V
C932	1-163-037-11	s	CERAMIC, CHIP 0.022uF 10% 25V
C933	1-163-251-11	s	CERAMIC, CHIP 100pF 5% 50V
C934	1-163-251-11	s	CERAMIC, CHIP 100pF 5% 50V
C935	1-126-392-11	s	ELECT, CHIP 100uF 20% 6.3V
C936	1-126-392-11	s	ELECT, CHIP 100uF 20% 6.3V
C937	1-163-251-11	s	CERAMIC, CHIP 100pF 5% 50V
C938	1-163-037-11	s	CERAMIC, CHIP 0.022uF 10% 25V
C939	1-163-037-11	s	CERAMIC, CHIP 0.022uF 10% 25V
C940	1-126-396-11	s	ELECT, CHIP 47uF 20% 16V
C941	1-163-037-11	s	CERAMIC, CHIP 0.022uF 10% 25V
C942	1-126-392-11	s	ELECT, CHIP 100uF 20% 6.3V
C943	1-163-239-00	s	CERAMIC, CHIP 33pF 5% 50V[For NTSC]

(IO-149/149A BOARD; Suffix -13)

Ref. No. or Q'ty	Part No.	SP	Description
C943	1-163-099-00	s	CERAMIC, CHIP 18pF 5% 50V [For PAL]
C945	1-163-037-11	s	CERAMIC, CHIP 0.022uF 10% 25V
C946	1-163-037-11	s	CERAMIC, CHIP 0.022uF 10% 25V
C947	1-126-392-11	s	ELECT, CHIP 100uF 20% 6.3V
C948	1-163-239-00	s	CERAMIC, CHIP 33pF 5% 50V[For NTSC]
C948	1-163-239-11	s	CERAMIC, CHIP 33pF 5% 50V [For PAL]
C949	1-126-392-11	s	ELECT, CHIP 100uF 20% 6.3V
C950	1-163-037-11	s	CERAMIC, CHIP 0.022uF 10% 25V
C951	1-163-239-11	s	CERAMIC, CHIP 33pF 5% 50V
C952	1-163-037-11	s	CERAMIC, CHIP 0.022uF 10% 25V
C953	1-163-239-00	s	CERAMIC, CHIP 33pF 5% 50V[For NTSC]
C953	1-163-099-00	s	CERAMIC, CHIP 18pF 5% 50V [For PAL]
C955	1-163-239-11	s	CERAMIC, CHIP 33pF 5% 50V
C956	1-163-037-11	s	CERAMIC, CHIP 0.022uF 10% 25V
C957	1-163-037-11	s	CERAMIC, CHIP 0.022uF 10% 25V
C961	1-126-392-11	s	ELECT, CHIP 100uF 20% 6.3V
C962	1-163-037-11	s	CERAMIC, CHIP 0.022uF 10% 25V
C965	1-126-392-11	s	ELECT, CHIP 100uF 20% 6.3V
C966	1-126-392-11	s	ELECT, CHIP 100uF 20% 6.3V
C967	1-163-037-11	s	CERAMIC, CHIP 0.022uF 10% 25V
C968	1-163-037-11	s	CERAMIC, CHIP 0.022uF 10% 25V
C969	1-126-392-11	s	ELECT, CHIP 100uF 20% 6.3V
C970	1-163-037-11	s	CERAMIC, CHIP 0.022uF 10% 25V
C971	1-163-037-11	s	CERAMIC, CHIP 0.022uF 10% 25V
C972	1-163-037-11	s	CERAMIC, CHIP 0.022uF 10% 25V
C973	1-163-037-11	s	CERAMIC, CHIP 0.022uF 10% 25V
C980	1-163-037-11	s	CERAMIC, CHIP 0.022uF 10% 25V
C981	1-163-275-11	s	CERAMIC, CHIP 0.001uF 5% 50V
C982	1-163-038-91	s	CERAMIC, CHIP 0.1uF 25V
C983	1-163-038-91	s	CERAMIC, CHIP 0.1uF 25V
C984	1-163-809-11	s	CERAMIC, CHIP 0.047uF 10% 25V
C987	1-163-227-11	s	CERAMIC, CHIP 10pF 5% 50V
C1001	1-126-393-11	s	ELECT, CHIP 33uF 20% 10V
C1002	1-163-038-91	s	CERAMIC, CHIP 0.1uF 25V
C1003	1-163-037-11	s	CERAMIC, CHIP 0.022uF 10% 25V
C1004	1-163-037-11	s	CERAMIC, CHIP 0.022uF 10% 25V
C1005	1-126-393-11	s	ELECT, CHIP 33uF 20% 10V
C1006	1-163-249-11	s	CERAMIC, CHIP 82pF 5% 50V
C1007	1-163-037-11	s	CERAMIC, CHIP 0.022uF 10% 25V
C1008	1-163-037-11	s	CERAMIC, CHIP 0.022uF 10% 25V
C1009	1-163-037-11	s	CERAMIC, CHIP 0.022uF 10% 25V
C1010	1-163-235-11	s	CERAMIC, CHIP 22pF 5% 50V
C1011	1-163-243-11	s	CERAMIC, CHIP 47pF 5% 50V[For NTSC]
C1011	1-163-235-11	s	CERAMIC, CHIP 22pF 5% 50V [For PAL]
C1012	1-126-393-11	s	ELECT, CHIP 33uF 20% 10V
C1013	1-163-038-91	s	CERAMIC, CHIP 0.1uF 25V
C1014	1-163-038-91	s	CERAMIC, CHIP 0.1uF 25V
C1015	1-163-037-11	s	CERAMIC, CHIP 0.022uF 10% 25V
C1016	1-163-263-11	s	CERAMIC, CHIP 330pF 5% 50V[For NTSC]
C1016	1-163-259-91	s	CERAMIC, CHIP 220pF 5% 50V [For PAL]
C1017	1-163-037-11	s	CERAMIC, CHIP 0.022uF 10% 25V
C1018	1-163-037-11	s	CERAMIC, CHIP 0.022uF 10% 25V
C1019	1-163-037-11	s	CERAMIC, CHIP 0.022uF 10% 25V
C1020	1-163-038-91	s	CERAMIC, CHIP 0.1uF 25V
C1021	1-163-038-91	s	CERAMIC, CHIP 0.1uF 25V
C1022	1-126-390-11	s	ELECT, CHIP 22uF 20% 6.3V
C1023	1-126-390-11	s	ELECT, CHIP 22uF 20% 6.3V
C1024	1-163-037-11	s	CERAMIC, CHIP 0.022uF 10% 25V
C1025	1-163-239-11	s	CERAMIC, CHIP 33pF 5% 50V

(IO-149/149A BOARD; Suffix -13)

Ref. No. or Q'ty	Part No.	SP	Description	
C1026	1-163-017-00	s	CERAMIC, CHIP 0.0047uF 5% 50V	
C1027	1-163-017-00	s	CERAMIC, CHIP 0.0047uF 5% 50V	
C1028	1-163-121-00	s	CERAMIC, CHIP 150pF 5% 50V	
C1029	1-163-038-91	s	CERAMIC, CHIP 0.1uF 25V	
C1030	1-163-038-91	s	CERAMIC, CHIP 0.1uF 25V	
C1031	1-126-391-11	s	ELECT, CHIP 47uF 20% 6.3V	
C1032	1-163-037-11	s	CERAMIC, CHIP 0.022uF 10% 25V	
C1033	1-163-037-11	s	CERAMIC, CHIP 0.022uF 10% 25V	
C1034	1-163-037-11	s	CERAMIC, CHIP 0.022uF 10% 25V	
C1035	1-163-037-11	s	CERAMIC, CHIP 0.022uF 10% 25V	
C1036	1-163-133-00	s	CERAMIC, CHIP 470pF 5% 50V	
C1037	1-126-390-11	s	ELECT, CHIP 22uF 20% 6.3V	
C1038	1-163-037-11	s	CERAMIC, CHIP 0.022uF 10% 25V	
C1039	1-163-037-11	s	CERAMIC, CHIP 0.022uF 10% 25V	
C1040	1-163-037-11	s	CERAMIC, CHIP 0.022uF 10% 25V	
C1041	1-163-121-00	s	CERAMIC, CHIP 150pF 5% 50V	
C1042	1-163-037-11	s	CERAMIC, CHIP 0.022uF 10% 25V	
C1043	1-163-038-91	s	CERAMIC, CHIP 0.1uF 25V	
C1044	1-163-037-11	s	CERAMIC, CHIP 0.022uF 10% 25V	
C1045	1-163-235-11	s	CERAMIC, CHIP 22pF 5% 50V	
C1046	1-163-239-11	s	CERAMIC, CHIP 33pF 5% 50V	
C1047	1-126-390-11	s	ELECT, CHIP 22uF 20% 6.3V	
C1048	1-163-121-00	s	CERAMIC, CHIP 150pF 5% 50V	
C1049	1-163-102-00	s	CERAMIC, CHIP 24pF 5% 50V	
C1050	1-126-390-11	s	ELECT, CHIP 22uF 20% 6.3V	
C1051	1-163-038-91	s	CERAMIC, CHIP 0.1uF 25V	
C1052	1-163-037-11	s	CERAMIC, CHIP 0.022uF 10% 25V	
C1053	1-163-038-91	s	CERAMIC, CHIP 0.1uF 25V	
C1054	1-163-241-11	s	CERAMIC, CHIP 39pF 5% 50V	
C1055	1-163-251-11	s	CERAMIC, CHIP 100pF 5% 50V	
C1056	1-163-263-11	s	CERAMIC, CHIP 330pF 5% 50V	
C1057	1-164-232-11	s	CERAMIC, CHIP 0.01uF 10% 100V	
C1058	1-163-037-11	s	CERAMIC, CHIP 0.022uF 10% 25V	
C1059	1-163-263-11	s	CERAMIC, CHIP 330pF 5% 50V	
C1060	1-126-390-11	s	ELECT, CHIP 22uF 20% 6.3V	
C1061	1-163-038-91	s	CERAMIC, CHIP 0.1uF 25V	
C1062	1-163-037-11	s	CERAMIC, CHIP 0.022uF 10% 25V	
C1063	1-126-390-11	s	ELECT, CHIP 22uF 20% 6.3V	
C1064	1-163-017-00	s	CERAMIC, CHIP 0.0047uF 5% 50V	
C1065	1-126-390-11	s	ELECT, CHIP 22uF 20% 6.3V	
C1066	1-163-037-11	s	CERAMIC, CHIP 0.022uF 10% 25V	
C1067	1-163-037-11	s	CERAMIC, CHIP 0.022uF 10% 25V	
C1068	1-163-037-11	s	CERAMIC, CHIP 0.022uF 10% 25V	
C1069	1-126-396-11	s	ELECT, CHIP 47uF 20% 16V	
C1070	1-163-133-00	s	CERAMIC, CHIP 470pF 5% 50V	[For NTSC]
C1070	1-163-131-00	s	CERAMIC, CHIP 390pF 5% 50V	[For PAL]
C1071	1-163-235-11	s	CERAMIC, CHIP 22pF 5% 50V	
C1072	1-126-394-11	s	ELECT, CHIP 10uF 20% 16V	
C1073	1-163-037-11	s	CERAMIC, CHIP 0.022uF 10% 25V	
C1074	1-163-038-91	s	CERAMIC, CHIP 0.1uF 25V	
C1075	1-126-401-11	s	ELECT, CHIP 1uF 20% 50V	
C1076	1-163-037-11	s	CERAMIC, CHIP 0.022uF 10% 25V	
C1078	1-163-038-91	s	CERAMIC, CHIP 0.1uF 25V	
C1079	1-164-232-11	s	CERAMIC, CHIP 0.01uF 10% 100V	
C1080	1-163-038-91	s	CERAMIC, CHIP 0.1uF 25V	
C1081	1-163-139-00	s	CERAMIC, CHIP 820pF 5% 50V	
C1082	1-163-259-91	s	CERAMIC, CHIP 220pF 5% 50V	

(IO-149/149A BOARD; Suffix -13)

Ref. No. or Q'ty	Part No.	SP	Description	
C1083	1-163-037-11	s	CERAMIC, CHIP 0.022uF 10% 25V	
C1084	1-164-232-11	s	CERAMIC, CHIP 0.01uF 10% 100V	
C1085	1-126-391-11	s	ELECT, CHIP 47uF 20% 6.3V	
C1086	1-126-391-11	s	ELECT, CHIP 47uF 20% 6.3V	
C1087	1-126-391-11	s	ELECT, CHIP 47uF 20% 6.3V	
C1088	1-163-038-91	s	CERAMIC, CHIP 0.1uF 25V	
C1089	1-163-038-91	s	CERAMIC, CHIP 0.1uF 25V	
C1090	1-163-275-11	s	CERAMIC, CHIP 0.001uF 5% 50V	
C1091	1-164-222-11	s	CERAMIC, CHIP 0.22uF 25V	
C1092	1-164-222-11	s	CERAMIC, CHIP 0.22uF 25V	
C1093	1-164-222-11	s	CERAMIC, CHIP 0.22uF 25V	
C1094	1-164-222-11	s	CERAMIC, CHIP 0.22uF 25V	
C1095	1-163-038-91	s	CERAMIC, CHIP 0.1uF 25V	
C1096	1-163-038-91	s	CERAMIC, CHIP 0.1uF 25V	
C1097	1-163-038-91	s	CERAMIC, CHIP 0.1uF 25V	
C1098	1-163-038-91	s	CERAMIC, CHIP 0.1uF 25V	
C1099	1-163-038-91	s	CERAMIC, CHIP 0.1uF 25V	
C1100	1-163-259-91	s	CERAMIC, CHIP 220pF 5% 50V	
C1101	1-163-259-91	s	CERAMIC, CHIP 220pF 5% 50V	
CT601	1-141-345-11	s	CAP, TRIMMER, CHIP 40pF	
CT602	1-141-345-11	s	CAP, TRIMMER, CHIP 40pF	
CT1001	1-141-322-11	s	CAP, TRIMMER, CHIP 20pF	
D1	8-719-941-04	s	DIODE SB007-03CP	
D2	8-719-941-04	s	DIODE SB007-03CP	
D3	8-719-053-18	s	DIODE 1SR154-400TE-25	
D4	8-719-053-18	s	DIODE 1SR154-400TE-25	
D5	8-719-053-18	s	DIODE 1SR154-400TE-25	
D101	8-719-041-39	s	DIODE KV1470	
D102	8-719-041-39	s	DIODE KV1470	
D103	8-719-041-39	s	DIODE KV1470	
D104	8-719-941-23	s	DIODE DA204U	
D105	8-719-941-23	s	DIODE DA204U	
D106	8-719-989-08	s	DIODE RB717F	
D301	8-719-976-99	s	DIODE DTZ5.1B	
D302	8-719-941-23	s	DIODE DA204U	
D501	8-719-941-23	s	DIODE DA204U	
D601	8-719-002-81	s	DIODE 1T363A-M20-T8A	
D602	8-719-002-81	s	DIODE 1T363A-M20-T8A	
D701	8-719-941-23	s	DIODE DA204U	[For NTSC]
D702	8-719-056-74	s	DIODE UDZ-TE-17-3.0B	
D703	8-719-024-81	s	DIODE 1SS300-TE85L	
D901	8-719-941-04	s	DIODE SB007-03CP	
D902	8-719-024-81	s	DIODE 1SS300-TE85L	
D904	8-719-941-23	s	DIODE DA204U	
D905	8-719-941-23	s	DIODE DA204U	
D906	8-719-941-23	s	DIODE DA204U	
D1001	8-719-041-39	s	DIODE KV1470	
D1002	8-719-941-23	s	DIODE DA204U	[For PAL]
D1003	8-719-941-23	s	DIODE DA204U	[For PAL]
D1004	8-719-002-81	s	DIODE 1T363A-M20-T8A	
D1005	8-719-941-23	s	DIODE DA204U	
D1006	8-719-941-23	s	DIODE DA204U	
D1007	8-719-941-23	s	DIODE DA204U	[For PAL]
D1008	8-719-024-81	s	DIODE 1SS300-TE85L	
D1009	8-719-024-81	s	DIODE 1SS300-TE85L	
F1	⚠ 1-576-124-11	s	LINK, IC, CHIP 1A	
F2	⚠ 1-533-282-21	s	LINK, IC, CHIP 2A	
F3	⚠ 1-576-124-11	s	LINK, IC, CHIP 1A	

(IO-149/149A BOARD; Suffix -13)

Ref. No. or Q'ty	Part No.	SP	Description	
F4	⚠ 1-533-282-21	s	LINK, IC, CHIP 2A	
F5	⚠ 1-576-124-11	s	LINK, IC, CHIP 1A	
F6	⚠ 1-533-282-21	s	LINK, IC, CHIP 2A	
FB800	1-543-309-21	s	BEAD, FERRITE	
FL101	1-233-598-11	s	FILTER, LOW-PASS	[For NTSC]
FL101	1-233-599-11	s	FILTER, LOW-PASS	[For PAL]
FL102	1-233-598-11	s	FILTER, LOW-PASS	[For NTSC]
FL102	1-233-599-11	s	FILTER, LOW-PASS	[For PAL]
FL103	1-233-614-11	s	FILTER, LOW-PASS	
FL104	1-239-771-11	s	FILTER, LOW-PASS	
FL701	1-233-614-11	s	FILTER, LOW-PASS	
FL901	1-233-614-11	s	FILTER, LOW-PASS	
FL902	1-233-598-11	s	FILTER, LOW-PASS	[For NTSC]
FL902	1-233-599-11	s	FILTER, LOW-PASS	[For PAL]
FL903	1-233-598-11	s	FILTER, LOW-PASS	[For NTSC]
FL903	1-233-599-11	s	FILTER, LOW-PASS	[For PAL]
FL1001	1-239-719-11	s	FILTER, NOISE, CHIP	
FL1002	1-239-719-11	s	FILTER, NOISE, CHIP	
FL1003	1-239-719-11	s	FILTER, NOISE, CHIP	
IC1	8-759-157-17	s	IC PQ05SZ1U	
IC2	8-759-157-17	s	IC PQ05SZ1U	
IC3	8-759-172-41	s	IC L78M09T-TL	
IC4	8-759-172-41	s	IC L78M09T-TL	
IC5	8-759-822-95	s	IC L79M05T-FA	
IC6	8-759-822-95	s	IC L79M05T-FA	
IC7	8-759-822-95	s	IC L79M05T-FA	
IC8	8-759-157-17	s	IC PQ05SZ1U	
IC101	8-759-198-63	s	IC S-81230SG-QB-T1	
IC102	8-759-278-58	s	IC NJM4558V-TE2	
IC103	8-759-278-58	s	IC NJM4558V-TE2	
IC105	8-759-278-58	s	IC NJM4558V-TE2	
IC106	8-759-082-61	s	IC TC4W53FU	[For NTSC]
IC107	8-759-076-06	s	IC TL064CPW	
IC108	8-759-076-06	s	IC TL064CPW	
IC109	8-752-052-77	s	IC CXA1450M	
IC110	8-752-363-60	s	IC CXD2307R-T6	
IC111	8-759-287-54	s	IC TL084CPW-E20	
IC112	8-759-287-54	s	IC TL084CPW-E20	
IC113	8-759-287-54	s	IC TL084CPW-E20	
IC114	8-759-066-59	s	IC TC74HC4053AFS	
IC115	8-752-054-80	s	IC CXA1521M	
IC116	8-752-054-80	s	IC CXA1521M	
IC117	8-759-906-59	s	IC CX22017	
IC118	8-759-907-81	s	IC SN74LS221NS	
IC301	8-759-082-59	s	IC TC7W32FU	
IC302	8-759-082-61	s	IC TC4W53FU	
IC304	8-759-287-54	s	IC TL084CPW-E20	
IC305	8-759-082-61	s	IC TC4W53FU	
IC306	8-752-052-73	s	IC CXA1451M	
IC307	8-752-052-73	s	IC CXA1451M	
IC308	8-759-262-00	s	IC MC14576CF	
IC309	8-752-052-73	s	IC CXA1451M	
IC310	8-752-052-73	s	IC CXA1451M	
IC311	8-752-052-73	s	IC CXA1451M	
IC312	8-759-082-61	s	IC TC4W53FU	
IC501	8-759-082-57	s	IC TC7W04FU	
IC502	8-752-052-77	s	IC CXA1450M	
IC503	8-752-052-77	s	IC CXA1450M	

(IO-149/149A BOARD; Suffix -13)

Ref. No. or Q'ty	Part No.	SP	Description	
IC504	8-759-173-16	s	IC TL062CPW	
IC505	8-759-076-06	s	IC TL064CPW	
IC506	8-759-430-88	s	IC TC74HC4051AFS(EL)	
IC507	8-759-324-03	s	IC HA17431UA-TL	
IC508	8-759-076-06	s	IC TL064CPW	
IC509	8-752-052-77	s	IC CXA1450M	
IC510	8-759-262-03	s	IC MC14577CF	
IC512	8-759-987-27	s	IC LM1881M	
IC513	8-759-079-66	s	IC TC74VHC123AFS(EL)	
IC514	8-759-980-04	s	IC LM311PS	
IC515	8-759-702-08	s	IC NJM360M	
IC516	8-752-052-77	s	IC CXA1450M	
IC601	8-759-082-57	s	IC TC7W04FU	
IC602	8-759-250-81	s	IC TC5081AP	
IC603	8-759-079-67	s	IC TC74VHC125FS(EL)	
IC604	8-759-058-58	s	IC TC7S04FU(TE85R)	
IC605	8-759-357-24	s	IC MC68HC705C8AFU	
IC606	8-752-335-47	s	IC CXD1216M	
IC607	8-759-066-59	s	IC TC74HC4053AFS	
IC608	8-759-241-03	s	IC TC74HC191AF	
IC609	8-759-082-57	s	IC TC7W04FU	
IC610	8-759-271-86	s	IC TC7SH04FU	
IC611	8-759-271-86	s	IC TC7SH04FU	
IC612	8-759-079-66	s	IC TC74VHC123AFS(EL)	
IC613	8-759-079-80	s	IC TC74VHC175FS(EL)	
IC614	8-759-519-49	s	IC CXD8165Q	
IC615	8-752-339-46	s	IC CXD1177Q	
IC616	8-759-082-57	s	IC TC7W04FU	
IC617	8-759-066-59	s	IC TC74HC4053AFS	
IC618	8-759-271-86	s	IC TC7SH04FU	
IC619	8-759-271-86	s	IC TC7SH04FU	
IC701	8-759-079-72	s	IC TC74VHC139FS(EL)	
IC702	8-759-079-46	s	IC TC74VHC00FS(EL)	
IC703	8-759-514-57	s	IC BA7046F	
IC704	8-759-987-27	s	IC LM1881M	
IC705	8-759-710-12	s	IC NJM2230M	
IC706	8-759-035-90	s	IC TC7S02F	
IC707	8-759-066-59	s	IC TC74HC4053AFS	
IC709	8-759-066-59	s	IC TC74HC4053AFS	
IC711	8-752-375-75	s	IC CXD2131Q-T4	[For NTSC]
IC712	8-759-173-16	s	IC TL062CPW	
IC901	8-759-387-83	s	IC MB40569PFV-ER	
IC902	8-759-277-19	s	IC UPD485505G-35	
IC903	8-759-277-19	s	IC UPD485505G-35	
IC904	8-759-277-19	s	IC UPD485505G-35	
IC905	8-759-513-76	s	IC CXD8161AQ	
IC906	8-759-058-64	s	IC TC7S32FU(TE85R)	
IC907	8-759-082-57	s	IC TC7W04FU	
IC908	8-752-363-60	s	IC CXD2307R-T6	
IC909	8-759-173-16	s	IC TL062CPW	
IC910	8-752-052-73	s	IC CXA1451M	
IC911	8-752-052-73	s	IC CXA1451M	
IC912	8-752-052-73	s	IC CXA1451M	
IC913	8-759-089-61	s	IC TC74HC4052AFS(EL)	
IC915	8-759-066-61	s	IC TC4053BFS	[For NTSC]
IC916	8-759-262-00	s	IC MC14576CF	
IC917	8-759-058-64	s	IC TC7S32FU(TE85R)	
IC918	8-759-287-54	s	IC TL084CPW-E20	
IC919	8-759-082-61	s	IC TC4W53FU	

(IO-149/149A BOARD; Suffix -13)

Ref. No. or Q'ty	Part No.	SP	Description	
IC1001	8-759-058-58	s	IC TC7S04FU(TE85R)	
IC1002	8-759-184-64	s	IC TC4W66FU(TE12R)	
IC1003	8-752-339-04	s	IC CXD2208Q	
IC1004	8-759-076-06	s	IC TL064CPW	
IC1005	8-759-076-06	s	IC TL064CPW	
IC1006	8-759-173-16	s	IC TL062CPW	
IC1007	8-759-058-58	s	IC TC7S04FU(TE85R)	
IC1008	8-759-082-60	s	IC TC7S66FU	
IC1009	8-759-520-55	s	IC CXD8243AM	
IC1010	8-759-079-49	s	IC TC74VHC04FS(EL)	
IC1011	8-759-184-64	s	IC TC4W66FU(TE12R)	
IC1012	8-759-066-59	s	IC TC74HC4053AFS	
IC1013	8-759-079-66	s	IC TC74VHC123AFS(EL)	
IC1014	8-759-987-27	s	IC LM1881M	
IC1015	8-759-907-81	s	IC SN74LS221NS	
IC1016	8-759-324-03	s	IC HA17431UA-TL	
IC1017	8-759-186-54	s	IC TC74VHC164F(EL)	
IC1018	8-759-324-03	s	IC HA17431UA-TL	
IC1019	8-759-079-61	s	IC TC74VHC74FS(EL)	
IC1020	8-759-079-66	s	IC TC74VHC123AFS(EL)	
IC1021	8-759-907-81	s	IC SN74LS221NS	
IC1022	8-759-058-64	s	IC TC7S32FU(TE85R)	
IC1023	8-759-079-61	s	IC TC74VHC74FS(EL)	
IC1024	8-759-066-59	s	IC TC74HC4053AFS	
IC1025	8-759-079-46	s	IC TC74VHC00FS(EL)	
IC1026	8-759-082-61	s	IC TC4W53FU	
L101	1-414-402-11	s	INDUCTOR, CHIP 47uH	
L102	1-414-400-11	s	INDUCTOR, CHIP 22uH	
L103	1-414-400-11	s	INDUCTOR, CHIP 22uH	
L104	1-414-402-11	s	INDUCTOR, CHIP 47uH	
L105	1-414-402-11	s	INDUCTOR, CHIP 47uH	
L106	1-414-400-11	s	INDUCTOR, CHIP 22uH	
L107	1-414-400-11	s	INDUCTOR, CHIP 22uH	
L108	1-414-402-11	s	INDUCTOR, CHIP 47uH	
L109	1-414-402-11	s	INDUCTOR, CHIP 47uH	
L110	1-414-402-11	s	INDUCTOR, CHIP 47uH	
L111	1-414-402-11	s	INDUCTOR, CHIP 47uH	
L112	1-414-404-11	s	INDUCTOR, CHIP 100uH	
L113	1-414-402-11	s	INDUCTOR, CHIP 47uH	
L114	1-414-404-11	s	INDUCTOR, CHIP 100uH	
L115	1-410-385-11	s	INDUCTOR, CHIP 22uH	
L116	1-410-385-11	s	INDUCTOR, CHIP 22uH	[For PAL]
L117	1-410-393-11	s	INDUCTOR, CHIP 100uH	
L301	1-414-402-11	s	INDUCTOR, CHIP 47uH	
L302	1-414-402-11	s	INDUCTOR, CHIP 47uH	
L303	1-414-402-11	s	INDUCTOR, CHIP 47uH	
L304	1-414-402-11	s	INDUCTOR, CHIP 47uH	
L305	1-410-391-11	s	INDUCTOR, CHIP 68uH	[For NTSC]
L305	1-410-393-11	s	INDUCTOR, CHIP 100uH	[For PAL]
L306	1-410-391-11	s	INDUCTOR, CHIP 68uH	[For NTSC]
L306	1-410-393-11	s	INDUCTOR, CHIP 100uH	[For PAL]
L307	1-414-402-11	s	INDUCTOR, CHIP 47uH	
L308	1-414-402-11	s	INDUCTOR, CHIP 47uH	
L309	1-414-402-11	s	INDUCTOR, CHIP 47uH	
L310	1-410-387-11	s	INDUCTOR, CHIP 33uH	
L311	1-410-387-11	s	INDUCTOR, CHIP 33uH	
L312	1-414-402-11	s	INDUCTOR, CHIP 47uH	
L313	1-414-402-11	s	INDUCTOR, CHIP 47uH	

(IO-149/149A BOARD; Suffix -13)

Ref. No. or Q'ty	Part No.	SP	Description	
L314	1-410-389-31	s	INDUCTOR, CHIP 47UH	
L315	1-410-387-11	s	INDUCTOR, CHIP 33uH	
L501	1-410-390-11	s	INDUCTOR, CHIP 56uH	[For NTSC]
L501	1-410-392-11	s	INDUCTOR, CHIP 82uH	[For PAL]
L502	1-410-393-11	s	INDUCTOR, CHIP 100uH	
L503	1-414-402-11	s	INDUCTOR, CHIP 47uH	
L504	1-414-402-11	s	INDUCTOR, CHIP 47uH	
L505	1-410-391-11	s	INDUCTOR, CHIP 68uH	
L506	1-414-402-11	s	INDUCTOR, CHIP 47uH	
L507	1-414-402-11	s	INDUCTOR, CHIP 47uH	
L601	1-414-402-11	s	INDUCTOR, CHIP 47uH	
L602	1-414-402-11	s	INDUCTOR, CHIP 47uH	
L603	1-414-400-11	s	INDUCTOR, CHIP 22uH	
L604	1-414-400-11	s	INDUCTOR, CHIP 22uH	
L605	1-410-389-31	s	INDUCTOR, CHIP 47uH	[For NTSC]
L605	1-410-386-11	s	INDUCTOR, CHIP 27uH	[For PAL]
L606	1-410-389-31	s	INDUCTOR, CHIP 47uH	[For NTSC]
L606	1-410-386-11	s	INDUCTOR, CHIP 27uH	[For PAL]
L607	1-410-389-31	s	INDUCTOR, CHIP 47uH	[For NTSC]
L607	1-410-386-11	s	INDUCTOR, CHIP 27uH	[For PAL]
L608	1-410-389-31	s	INDUCTOR, CHIP 47uH	[For NTSC]
L608	1-410-386-11	s	INDUCTOR, CHIP 27uH	[For PAL]
L701	1-414-400-11	s	INDUCTOR, CHIP 22uH	
L702	1-414-400-11	s	INDUCTOR, CHIP 22uH	
L703	1-414-402-11	s	INDUCTOR, CHIP 47uH	
L704	1-414-402-11	s	INDUCTOR, CHIP 47uH	
L901	1-414-400-11	s	INDUCTOR, CHIP 22uH	
L902	1-414-400-11	s	INDUCTOR, CHIP 22uH	
L903	1-410-373-31	s	INDUCTOR, CHIP 2.2uH	[For NTSC]
L903	1-410-372-21	s	INDUCTOR, CHIP 1.8uH	[For PAL]
L904	1-410-373-31	s	INDUCTOR, CHIP 2.2uH	
L905	1-414-402-11	s	INDUCTOR, CHIP 47uH	
L906	1-410-373-31	s	INDUCTOR, CHIP 2.2uH	[For NTSC]
L906	1-410-372-21	s	INDUCTOR, CHIP 1.8uH	[For PAL]
L907	1-414-402-11	s	INDUCTOR, CHIP 47uH	
L908	1-414-402-11	s	INDUCTOR, CHIP 47uH	
L909	1-414-400-11	s	INDUCTOR, CHIP 22uH	
L910	1-414-400-11	s	INDUCTOR, CHIP 22uH	
L1001	1-414-402-11	s	INDUCTOR, CHIP 47uH	
L1002	1-410-387-11	s	INDUCTOR, CHIP 33uH	
L1003	1-410-375-11	s	INDUCTOR, CHIP 3.3uH	
L1004	1-410-389-31	s	INDUCTOR, CHIP 47uH	[For NTSC]
L1004	1-410-387-11	s	INDUCTOR, CHIP 33uH	[For PAL]
L1005	1-410-378-11	s	INDUCTOR, CHIP 5.6uH	
L1006	1-414-404-11	s	INDUCTOR, CHIP 100uH	
L1007	1-414-402-11	s	INDUCTOR, CHIP 47uH	
L1008	1-410-393-11	s	INDUCTOR, CHIP 100uH	
L1009	1-410-393-11	s	INDUCTOR, CHIP 100uH	
L1010	1-410-393-11	s	INDUCTOR, CHIP 100uH	
L1011	1-414-404-11	s	INDUCTOR, CHIP 100uH	
L1012	1-410-393-11	s	INDUCTOR, CHIP 100uH	
L1013	1-414-404-11	s	INDUCTOR, CHIP 100uH	
Q101	8-729-117-32	s	TRANSISTOR 2SC4177	
Q102	8-729-117-32	s	TRANSISTOR 2SC4177	
Q103	8-729-117-32	s	TRANSISTOR 2SC4177	
Q104	8-729-140-63	s	TRANSISTOR 2SA1611-M5M6	
Q105	8-729-117-32	s	TRANSISTOR 2SC4177	
Q106	8-729-117-32	s	TRANSISTOR 2SC4177	

(IO-149/149A BOARD; Suffix -13)

Ref. No. or Q'ty	Part No.	SP	Description
Q107	8-729-117-32	s	TRANSISTOR 2SC4177
Q108	8-729-923-06	s	TRANSISTOR FMW-8
Q109	8-729-923-06	s	TRANSISTOR FMW-8
Q110	8-729-923-06	s	TRANSISTOR FMW-8
Q111	8-729-904-04	s	TRANSISTOR FMS2
Q112	8-729-904-04	s	TRANSISTOR FMS2
Q113	8-729-904-04	s	TRANSISTOR FMS2
Q114	8-729-903-82	s	TRANSISTOR FMW2
Q115	8-729-903-82	s	TRANSISTOR FMW2
Q116	8-729-903-82	s	TRANSISTOR FMW2
Q117	8-729-931-46	s	TRANSISTOR FMW7
Q118	8-729-931-46	s	TRANSISTOR FMW7
Q119	8-729-931-46	s	TRANSISTOR FMW7
Q120	8-729-907-26	s	TRANSISTOR IMX1
Q121	8-729-907-26	s	TRANSISTOR IMX1
Q122	8-729-907-26	s	TRANSISTOR IMX1
Q123	8-729-143-14	s	TRANSISTOR 2SC4176-B35
Q124	8-729-117-32	s	TRANSISTOR 2SC4177
Q125	8-729-140-63	s	TRANSISTOR 2SA1611-M5M6
Q126	8-729-117-32	s	TRANSISTOR 2SC4177
Q127	8-729-143-14	s	TRANSISTOR 2SC4176-B35
Q128	8-729-140-63	s	TRANSISTOR 2SA1611-M5M6
Q129	8-729-903-82	s	TRANSISTOR FMW2
Q130	8-729-117-32	s	TRANSISTOR 2SC4177
Q131	8-729-903-82	s	TRANSISTOR FMW2
Q301	8-729-143-14	s	TRANSISTOR 2SC4176-B35
Q302	8-729-904-41	s	TRANSISTOR FMY3
Q303	8-729-140-63	s	TRANSISTOR 2SA1611-M5M6
Q304	8-729-140-63	s	TRANSISTOR 2SA1611-M5M6
Q305	8-729-117-32	s	TRANSISTOR 2SC4177
Q306	8-729-117-32	s	TRANSISTOR 2SC4177
Q307	8-729-907-26	s	TRANSISTOR IMX1
Q308	8-729-117-32	s	TRANSISTOR 2SC4177
Q309	8-729-117-32	s	TRANSISTOR 2SC4177
Q310	8-729-143-14	s	TRANSISTOR 2SC4176-B35
Q311	8-729-117-32	s	TRANSISTOR 2SC4177
Q312	8-729-907-26	s	TRANSISTOR IMX1
Q313	8-729-140-63	s	TRANSISTOR 2SA1611-M5M6
Q314	8-729-140-63	s	TRANSISTOR 2SA1611-M5M6
Q315	8-729-117-32	s	TRANSISTOR 2SC4177
Q316	8-729-140-63	s	TRANSISTOR 2SA1611-M5M6
Q317	8-729-117-32	s	TRANSISTOR 2SC4177
Q318	8-729-904-41	s	TRANSISTOR FMY3
Q319	8-729-904-41	s	TRANSISTOR FMY3
Q320	8-729-117-32	s	TRANSISTOR 2SC4177
Q321	8-729-117-32	s	TRANSISTOR 2SC4177
Q322	8-729-117-32	s	TRANSISTOR 2SC4177
Q323	8-729-143-14	s	TRANSISTOR 2SC4176-B35
Q324	8-729-140-63	s	TRANSISTOR 2SA1611-M5M6
Q325	8-729-140-63	s	TRANSISTOR 2SA1611-M5M6
Q326	8-729-117-32	s	TRANSISTOR 2SC4177
Q327	8-729-117-32	s	TRANSISTOR 2SC4177
Q328	8-729-117-32	s	TRANSISTOR 2SC4177
Q329	8-729-117-32	s	TRANSISTOR 2SC4177
Q330	8-729-117-32	s	TRANSISTOR 2SC4177
Q331	8-729-904-41	s	TRANSISTOR FMY3
Q332	8-729-422-44	s	TRANSISTOR 2SK663
Q333	8-729-422-44	s	TRANSISTOR 2SK663
Q334	8-729-422-44	s	TRANSISTOR 2SK663

(IO-149/149A BOARD; Suffix -13)

Ref. No. or Q'ty	Part No.	SP	Description
Q335	8-729-422-44	s	TRANSISTOR 2SK663
Q336	8-729-140-63	s	TRANSISTOR 2SA1611-M5M6
Q337	8-729-140-63	s	TRANSISTOR 2SA1611-M5M6
Q338	8-729-140-63	s	TRANSISTOR 2SA1611-M5M6
Q339	8-729-140-63	s	TRANSISTOR 2SA1611-M5M6
Q340	8-729-117-32	s	TRANSISTOR 2SC4177
Q341	8-729-907-26	s	TRANSISTOR IMX1
Q342	8-729-907-26	s	TRANSISTOR IMX1
Q343	8-729-117-32	s	TRANSISTOR 2SC4177
Q344	8-729-117-32	s	TRANSISTOR 2SC4177
Q345	8-729-907-26	s	TRANSISTOR IMX1
Q346	8-729-117-32	s	TRANSISTOR 2SC4177
Q347	8-729-907-26	s	TRANSISTOR IMX1
Q348	8-729-117-32	s	TRANSISTOR 2SC4177
Q349	8-729-140-63	s	TRANSISTOR 2SA1611-M5M6
Q350	8-729-140-63	s	TRANSISTOR 2SA1611-M5M6
Q501	8-729-117-32	s	TRANSISTOR 2SC4177
Q502	8-729-117-32	s	TRANSISTOR 2SC4177
Q503	8-729-117-32	s	TRANSISTOR 2SC4177
Q504	8-729-117-32	s	TRANSISTOR 2SC4177
Q505	8-729-117-32	s	TRANSISTOR 2SC4177
Q506	8-729-904-41	s	TRANSISTOR FMY3
Q507	8-729-117-32	s	TRANSISTOR 2SC4177
Q508	8-729-117-32	s	TRANSISTOR 2SC4177
Q509	8-729-117-32	s	TRANSISTOR 2SC4177
Q601	8-729-140-47	s	TRANSISTOR 2SC3735-B34
Q602	8-729-140-47	s	TRANSISTOR 2SC3735-B34
Q603	8-729-140-47	s	TRANSISTOR 2SC3735-B34
Q604	8-729-140-47	s	TRANSISTOR 2SC3735-B34
Q605	8-729-117-32	s	TRANSISTOR 2SC4177
Q606	8-729-117-32	s	TRANSISTOR 2SC4177
Q607	8-729-117-32	s	TRANSISTOR 2SC4177
Q608	8-729-117-32	s	TRANSISTOR 2SC4177
Q701	8-729-117-32	s	TRANSISTOR 2SC4177
Q702	8-729-117-32	s	TRANSISTOR 2SC4177
Q703	8-729-140-63	s	TRANSISTOR 2SA1611-M5M6
Q704	8-729-027-38	s	TRANSISTOR DTA144EKA-T146
Q705	8-729-027-59	s	TRANSISTOR DTC144EKA-T146
Q706	8-729-904-41	s	TRANSISTOR FMY3
Q707	8-729-117-32	s	TRANSISTOR 2SC4177
Q708	8-729-117-32	s	TRANSISTOR 2SC4177
Q709	8-729-904-04	s	TRANSISTOR FMS2
Q710	8-729-117-32	s	TRANSISTOR 2SC4177
Q711	8-729-117-32	s	TRANSISTOR 2SC4177
Q712	8-729-140-63	s	TRANSISTOR 2SA1611-M5M6
Q713	8-729-117-32	s	TRANSISTOR 2SC4177
Q714	8-729-117-32	s	TRANSISTOR 2SC4177
Q715	8-729-117-32	s	TRANSISTOR 2SC4177
Q716	8-729-117-32	s	TRANSISTOR 2SC4177 [For NTSC]
Q717	8-729-117-32	s	TRANSISTOR 2SC4177
Q718	8-729-907-26	s	TRANSISTOR IMX1
Q719	8-729-903-82	s	TRANSISTOR FMW2
Q720	8-729-907-26	s	TRANSISTOR IMX1
Q721	8-729-903-82	s	TRANSISTOR FMW2
Q722	8-729-117-32	s	TRANSISTOR 2SC4177
Q723	8-729-117-32	s	TRANSISTOR 2SC4177
Q724	8-729-117-32	s	TRANSISTOR 2SC4177
Q725	8-729-117-32	s	TRANSISTOR 2SC4177
Q726	8-729-117-32	s	TRANSISTOR 2SC4177

(IO-149/149A BOARD; Suffix -13)

Ref. No. or Q'ty	Part No.	SP	Description
Q727	8-729-140-63	s	TRANSISTOR 2SA1611-M5M6
Q728	8-729-140-63	s	TRANSISTOR 2SA1611-M5M6
Q729	8-729-140-63	s	TRANSISTOR 2SA1611-M5M6
Q730	8-729-140-63	s	TRANSISTOR 2SA1611-M5M6
Q731	8-729-117-32	s	TRANSISTOR 2SC4177
Q732	8-729-140-63	s	TRANSISTOR 2SA1611-M5M6
Q733	8-729-117-32	s	TRANSISTOR 2SC4177
Q734	8-729-117-32	s	TRANSISTOR 2SC4177
Q735	8-729-117-32	s	TRANSISTOR 2SC4177
Q736	8-729-117-32	s	TRANSISTOR 2SC4177 [For NTSC]
Q737	8-729-904-04	s	TRANSISTOR FMS2
Q901	8-729-027-59	s	TRANSISTOR DTC144EKA-T146
Q902	8-729-117-32	s	TRANSISTOR 2SC4177
Q903	8-729-117-32	s	TRANSISTOR 2SC4177
Q904	8-729-117-32	s	TRANSISTOR 2SC4177
Q905	8-729-117-32	s	TRANSISTOR 2SC4177
Q906	8-729-117-32	s	TRANSISTOR 2SC4177
Q907	8-729-117-32	s	TRANSISTOR 2SC4177
Q908	8-729-117-32	s	TRANSISTOR 2SC4177
Q909	8-729-117-32	s	TRANSISTOR 2SC4177
Q911	8-729-422-44	s	TRANSISTOR 2SK663
Q912	8-729-422-44	s	TRANSISTOR 2SK663
Q914	8-729-140-63	s	TRANSISTOR 2SA1611-M5M6
Q915	8-729-422-44	s	TRANSISTOR 2SK663
Q916	8-729-422-44	s	TRANSISTOR 2SK663
Q917	8-729-117-32	s	TRANSISTOR 2SC4177
Q918	8-729-140-63	s	TRANSISTOR 2SA1611-M5M6
Q919	8-729-117-32	s	TRANSISTOR 2SC4177
Q920	8-729-117-32	s	TRANSISTOR 2SC4177
Q921	8-729-117-32	s	TRANSISTOR 2SC4177
Q922	8-729-117-32	s	TRANSISTOR 2SC4177
Q923	8-729-117-32	s	TRANSISTOR 2SC4177
Q924	8-729-117-32	s	TRANSISTOR 2SC4177
Q925	8-729-117-32	s	TRANSISTOR 2SC4177
Q926	8-729-117-32	s	TRANSISTOR 2SC4177
Q927	8-729-140-63	s	TRANSISTOR 2SA1611-M5M6
Q1001	8-729-027-59	s	TRANSISTOR DTC144EKA-T146
Q1002	8-729-140-63	s	TRANSISTOR 2SA1611-M5M6
Q1003	8-729-117-32	s	TRANSISTOR 2SC4177
Q1004	8-729-117-32	s	TRANSISTOR 2SC4177
Q1005	8-729-117-32	s	TRANSISTOR 2SC4177
Q1006	8-729-140-63	s	TRANSISTOR 2SA1611-M5M6
Q1007	8-729-140-63	s	TRANSISTOR 2SA1611-M5M6
Q1008	8-729-117-32	s	TRANSISTOR 2SC4177
Q1009	8-729-117-32	s	TRANSISTOR 2SC4177
Q1010	8-729-140-63	s	TRANSISTOR 2SA1611-M5M6
Q1011	8-729-140-63	s	TRANSISTOR 2SA1611-M5M6
Q1012	8-729-027-59	s	TRANSISTOR DTC144EKA-T146
Q1013	8-729-140-63	s	TRANSISTOR 2SA1611-M5M6
Q1014	8-729-117-32	s	TRANSISTOR 2SC4177
Q1015	8-729-140-63	s	TRANSISTOR 2SA1611-M5M6
Q1016	8-729-140-63	s	TRANSISTOR 2SA1611-M5M6
Q1017	8-729-117-32	s	TRANSISTOR 2SC4177
Q1018	8-729-140-47	s	TRANSISTOR 2SC3735-B34
Q1019	8-729-117-32	s	TRANSISTOR 2SC4177
Q1020	8-729-143-07	s	TRANSISTOR 2SA1610-YY33
Q1021	8-729-117-32	s	TRANSISTOR 2SC4177
Q1022	8-729-143-07	s	TRANSISTOR 2SA1610-YY33
Q1023	8-729-117-32	s	TRANSISTOR 2SC4177

(IO-149/149A BOARD; Suffix -13)

Ref. No. or Q'ty	Part No.	SP	Description
R101	1-216-672-11	s	METAL, CHIP 7.5k 0.5% 1/10W
R102	1-216-665-11	s	METAL, CHIP 3.9k 0.5% 1/10W
R103	1-216-667-11	s	METAL, CHIP 4.7k 0.5% 1/10W
R104	1-216-675-11	s	METAL, CHIP 10k 0.5% 1/10W
R105	1-216-041-00	s	METAL, CHIP 470 5% 1/10W
R106	1-216-295-91	s	RES, CHIP 0
R107	1-216-652-11	s	METAL, CHIP 1.1k 0.5% 1/10W
R108	1-216-668-11	s	METAL, CHIP 5.1k 0.5% 1/10W
R110	1-216-295-91	s	RES, CHIP 0
R112	1-216-295-91	s	RES, CHIP 0
R113	1-216-668-11	s	METAL, CHIP 5.1k 0.5% 1/10W
R114	1-216-665-11	s	METAL, CHIP 3.9k 0.5% 1/10W
R115	1-216-663-11	s	METAL, CHIP 3.3k 0.5% 1/10W
R116	1-216-073-00	s	METAL, CHIP 10k 5% 1/10W
R117	1-216-655-11	s	METAL, CHIP 1.5k 0.5% 1/10W
R118	1-216-657-11	s	METAL, CHIP 1.8k 0.5% 1/10W
R119	1-216-675-11	s	METAL, CHIP 10k 0.5% 1/10W
R120	1-216-675-11	s	METAL, CHIP 10k 0.5% 1/10W
R121	1-216-073-00	s	METAL, CHIP 10k 5% 1/10W
R122	1-216-073-00	s	METAL, CHIP 10k 5% 1/10W
R123	1-216-085-00	s	METAL, CHIP 33k 5% 1/10W
R124	1-216-085-00	s	METAL, CHIP 33k 5% 1/10W
R125	1-216-121-91	s	METAL, CHIP 1M 5% 1/10W
R126	1-216-121-91	s	METAL, CHIP 1M 5% 1/10W
R127	1-216-085-00	s	METAL, CHIP 33k 5% 1/10W
R128	1-216-085-00	s	METAL, CHIP 33k 5% 1/10W
R129	1-216-121-91	s	METAL, CHIP 1M 5% 1/10W
R130	1-216-121-91	s	METAL, CHIP 1M 5% 1/10W
R131	1-216-033-00	s	METAL, CHIP 220 5% 1/10W
R132	1-216-033-00	s	METAL, CHIP 220 5% 1/10W
R133	1-216-053-00	s	METAL, CHIP 1.5k 5% 1/10W
R134	1-216-053-00	s	METAL, CHIP 1.5k 5% 1/10W
R135	1-216-675-11	s	METAL, CHIP 10k 0.5% 1/10W
R136	1-216-073-00	s	METAL, CHIP 10k 5% 1/10W
R137	1-216-081-00	s	METAL, CHIP 22k 5% 1/10W
R138	1-216-121-91	s	METAL, CHIP 1M 5% 1/10W
R139	1-216-085-00	s	METAL, CHIP 33k 5% 1/10W
R140	1-216-121-91	s	METAL, CHIP 1M 5% 1/10W
R141	1-216-033-00	s	METAL, CHIP 220 5% 1/10W
R142	1-216-065-00	s	METAL, CHIP 4.7k 5% 1/10W [For NTSC]
R143	1-216-065-00	s	METAL, CHIP 4.7k 5% 1/10W [For NTSC]
R144	1-216-677-11	s	METAL, CHIP 12k 0.5% 1/10W
R145	1-216-678-11	s	METAL, CHIP 13k 0.5% 1/10W
R146	1-216-678-11	s	METAL, CHIP 13k 0.5% 1/10W
R147	1-216-667-11	s	METAL, CHIP 4.7k 0.5% 1/10W
R148	1-216-678-11	s	METAL, CHIP 13k 0.5% 1/10W
R149	1-216-659-11	s	METAL, CHIP 2.2k 0.5% 1/10W
R150	1-216-673-11	s	METAL, CHIP 8.2k 0.5% 1/10W
R151	1-216-659-11	s	METAL, CHIP 2.2k 0.5% 1/10W
R152	1-216-661-11	s	METAL, CHIP 2.7k 0.5% 1/10W
R153	1-216-661-11	s	METAL, CHIP 2.7k 0.5% 1/10W
R154	1-216-085-00	s	METAL, CHIP 33k 5% 1/10W
R155	1-216-675-11	s	METAL, CHIP 10k 0.5% 1/10W
R156	1-216-675-11	s	METAL, CHIP 10k 0.5% 1/10W
R157	1-216-679-11	s	METAL, CHIP 15k 0.5% 1/10W
R158	1-216-679-11	s	METAL, CHIP 15k 0.5% 1/10W
R159	1-216-659-11	s	METAL, CHIP 2.2k 0.5% 1/10W
R160	1-216-679-11	s	METAL, CHIP 15k 0.5% 1/10W
R161	1-216-679-11	s	METAL, CHIP 15k 0.5% 1/10W

(IO-149/149A BOARD; Suffix -13)

Ref. No. or Q'ty	Part No.	SP	Description
R162	1-216-661-11	s	METAL, CHIP 2.7k 0.5% 1/10W
R163	1-216-679-11	s	METAL, CHIP 15k 0.5% 1/10W
R164	1-216-671-11	s	METAL, CHIP 6.8k 0.5% 1/10W
R165	1-216-671-11	s	METAL, CHIP 6.8k 0.5% 1/10W
R166	1-216-679-11	s	METAL, CHIP 15k 0.5% 1/10W
R167	1-216-663-11	s	METAL, CHIP 3.3k 0.5% 1/10W
R168	1-216-659-11	s	METAL, CHIP 2.2k 0.5% 1/10W
R169	1-216-081-00	s	METAL, CHIP 22k 5% 1/10W
R170	1-216-081-00	s	METAL, CHIP 22k 5% 1/10W
R171	1-216-081-00	s	METAL, CHIP 22k 5% 1/10W
R172	1-216-645-11	s	METAL, CHIP 560 0.5% 1/10W
R173	1-216-665-11	s	METAL, CHIP 3.9k 0.5% 1/10W
R174	1-216-665-11	s	METAL, CHIP 3.9k 0.5% 1/10W
R175	1-216-089-91	s	METAL, CHIP 47k 5% 1/10W
R176	1-216-667-11	s	METAL, CHIP 4.7k 0.5% 1/10W
R177	1-216-089-91	s	METAL, CHIP 47k 5% 1/10W
R178	1-216-089-91	s	METAL, CHIP 47k 5% 1/10W
R179	1-216-639-11	s	METAL, CHIP 330 0.5% 1/10W
R180	1-216-639-11	s	METAL, CHIP 330 0.5% 1/10W
R181	1-216-639-11	s	METAL, CHIP 330 0.5% 1/10W
R182	1-216-639-11	s	METAL, CHIP 330 0.5% 1/10W
R183	1-216-639-11	s	METAL, CHIP 330 0.5% 1/10W
R184	1-216-639-11	s	METAL, CHIP 330 0.5% 1/10W
R185	1-216-045-00	s	METAL, CHIP 680 5% 1/10W
R186	1-216-045-00	s	METAL, CHIP 680 5% 1/10W
R187	1-216-017-91	s	METAL, CHIP 47 5% 1/10W
R188	1-216-017-91	s	METAL, CHIP 47 5% 1/10W
R189	1-216-045-00	s	METAL, CHIP 680 5% 1/10W
R190	1-216-017-91	s	METAL, CHIP 47 5% 1/10W
R191	1-216-017-91	s	METAL, CHIP 47 5% 1/10W
R192	1-216-017-91	s	METAL, CHIP 47 5% 1/10W
R193	1-216-017-91	s	METAL, CHIP 47 5% 1/10W
R194	1-216-057-00	s	METAL, CHIP 2.2k 5% 1/10W
R195	1-216-057-00	s	METAL, CHIP 2.2k 5% 1/10W
R196	1-216-057-00	s	METAL, CHIP 2.2k 5% 1/10W
R197	1-216-049-91	s	METAL, CHIP 1k 5% 1/10W
R198	1-216-049-91	s	METAL, CHIP 1k 5% 1/10W
R199	1-216-049-91	s	METAL, CHIP 1k 5% 1/10W
R200	1-216-049-91	s	METAL, CHIP 1k 5% 1/10W
R201	1-216-049-91	s	METAL, CHIP 1k 5% 1/10W
R202	1-216-049-91	s	METAL, CHIP 1k 5% 1/10W
R203	1-216-057-00	s	METAL, CHIP 2.2k 5% 1/10W
R204	1-216-057-00	s	METAL, CHIP 2.2k 5% 1/10W
R205	1-216-057-00	s	METAL, CHIP 2.2k 5% 1/10W
R206	1-216-033-00	s	METAL, CHIP 220 5% 1/10W
R207	1-216-033-00	s	METAL, CHIP 220 5% 1/10W
R208	1-216-033-00	s	METAL, CHIP 220 5% 1/10W
R209	1-216-045-00	s	METAL, CHIP 680 5% 1/10W
R210	1-216-045-00	s	METAL, CHIP 680 5% 1/10W
R211	1-216-045-00	s	METAL, CHIP 680 5% 1/10W
R212	1-216-077-00	s	METAL, CHIP 15k 5% 1/10W
R213	1-216-077-00	s	METAL, CHIP 15k 5% 1/10W
R214	1-216-077-00	s	METAL, CHIP 15k 5% 1/10W
R215	1-216-027-00	s	METAL, CHIP 120 5% 1/10W
R216	1-216-027-00	s	METAL, CHIP 120 5% 1/10W
R217	1-216-027-00	s	METAL, CHIP 120 5% 1/10W
R218	1-216-045-00	s	METAL, CHIP 680 5% 1/10W [For NTSC]
R219	1-216-045-00	s	METAL, CHIP 680 5% 1/10W [For NTSC]
R220	1-216-295-91	s	RES, CHIP 0

(IO-149/149A BOARD; Suffix -13)

Ref. No. or Q'ty	Part No.	SP	Description
R221	1-216-017-91	s	METAL, CHIP 47 5% 1/10W
R222	1-216-017-91	s	METAL, CHIP 47 5% 1/10W
R223	1-216-017-91	s	METAL, CHIP 47 5% 1/10W
R224	1-216-651-11	s	METAL, CHIP 1k 0.5% 1/10W
R225	1-216-659-11	s	METAL, CHIP 2.2k 0.5% 1/10W
R226	1-216-651-11	s	METAL, CHIP 1k 0.5% 1/10W
R227	1-216-659-11	s	METAL, CHIP 2.2k 0.5% 1/10W
R228	1-216-049-91	s	METAL, CHIP 1k 5% 1/10W
R229	1-216-659-11	s	METAL, CHIP 2.2k 0.5% 1/10W
R230	1-216-651-11	s	METAL, CHIP 1k 0.5% 1/10W
R231	1-216-121-91	s	METAL, CHIP 1M 5% 1/10W
R232	1-216-049-91	s	METAL, CHIP 1k 5% 1/10W
R233	1-216-049-91	s	METAL, CHIP 1k 5% 1/10W
R234	1-216-121-91	s	METAL, CHIP 1M 5% 1/10W
R235	1-216-121-91	s	METAL, CHIP 1M 5% 1/10W
R236	1-216-049-91	s	METAL, CHIP 1k 5% 1/10W
R237	1-216-049-91	s	METAL, CHIP 1k 5% 1/10W
R238	1-216-049-91	s	METAL, CHIP 1k 5% 1/10W
R239	1-216-049-91	s	METAL, CHIP 1k 5% 1/10W
R240	1-216-049-91	s	METAL, CHIP 1k 5% 1/10W
R241	1-216-089-91	s	METAL, CHIP 47k 5% 1/10W
R242	1-216-049-91	s	METAL, CHIP 1k 5% 1/10W
R243	1-216-089-91	s	METAL, CHIP 47k 5% 1/10W
R244	1-216-073-00	s	METAL, CHIP 10k 5% 1/10W
R245	1-216-649-11	s	METAL, CHIP 820 0.5% 1/10W
R246	1-216-057-00	s	METAL, CHIP 2.2k 5% 1/10W
R247	1-216-651-11	s	METAL, CHIP 1k 0.5% 1/10W
R248	1-216-057-00	s	METAL, CHIP 2.2k 5% 1/10W
R249	1-216-643-11	s	METAL, CHIP 470 0.5% 1/10W
R250	1-216-639-11	s	METAL, CHIP 330 0.5% 1/10W
R251	1-216-643-11	s	METAL, CHIP 470 0.5% 1/10W
R252	1-216-677-11	s	METAL, CHIP 12k 0.5% 1/10W
R253	1-216-683-11	s	METAL, CHIP 22k 0.5% 1/10W
R254	1-216-681-11	s	METAL, CHIP 18k 0.5% 1/10W
R255	1-216-683-11	s	METAL, CHIP 22k 0.5% 1/10W
R256	1-216-097-91	s	METAL, CHIP 100k 5% 1/10W
R257	1-216-089-91	s	METAL, CHIP 47k 5% 1/10W
R258	1-216-295-91	s	RES, CHIP 0
R259	1-216-668-11	s	METAL, CHIP 5.1k 0.5% 1/10W [For NTSC]
R259	1-216-675-11	s	METAL, CHIP 10k 0.5% 1/10W[For PAL]
R260	1-216-073-00	s	METAL, CHIP 10k 5% 1/10W
R261	1-216-049-91	s	METAL, CHIP 1k 5% 1/10W
R262	1-216-687-11	s	METAL, CHIP 33k 0.5% 1/10W [For NTSC]
R262	1-216-682-11	s	METAL, CHIP 20k 0.5% 1/10W[For PAL]
R263	1-216-065-00	s	METAL, CHIP 4.7k 5% 1/10W
R264	1-216-065-00	s	METAL, CHIP 4.7k 5% 1/10W
R265	1-216-049-91	s	METAL, CHIP 1k 5% 1/10W
R266	1-216-049-91	s	METAL, CHIP 1k 5% 1/10W
R267	1-216-049-91	s	METAL, CHIP 1k 5% 1/10W
R268	1-216-049-91	s	METAL, CHIP 1k 5% 1/10W
R269	1-216-057-00	s	METAL, CHIP 2.2k 5% 1/10W
R270	1-216-647-11	s	METAL, CHIP 680 0.5% 1/10W
R271	1-216-081-00	s	METAL, CHIP 22k 5% 1/10W
R272	1-216-666-11	s	METAL, CHIP 4.3k 0.5% 1/10W
R273	1-216-651-11	s	METAL, CHIP 1k 0.5% 1/10W [For PAL]

(IO-149/149A BOARD; Suffix -13)

Ref. No. or Q'ty	Part No.	SP	Description
R274	1-216-661-11	s	METAL, CHIP 2.7k 0.5% 1/10W
R275	1-216-057-00	s	METAL, CHIP 2.2k 5% 1/10W
R276	1-216-049-91	s	METAL, CHIP 1k 5% 1/10W
R277	1-216-081-00	s	METAL, CHIP 22k 5% 1/10W
R278	1-216-025-91	s	METAL, CHIP 100 5% 1/10W
R279	1-216-017-91	s	METAL, CHIP 47 5% 1/10W
R280	1-216-657-11	s	METAL, CHIP 1.8k 0.5% 1/10W
R281	1-216-073-00	s	METAL, CHIP 10k 5% 1/10W
R282	1-216-097-91	s	METAL, CHIP 100k 5% 1/10W[For NTSC]
R282	1-216-105-91	s	METAL, CHIP 220k 5% 1/10W[For PAL]
R283	1-216-081-00	s	METAL, CHIP 22k 5% 1/10W
R284	1-216-081-00	s	METAL, CHIP 22k 5% 1/10W
R285	1-216-081-00	s	METAL, CHIP 22k 5% 1/10W
R286	1-216-081-00	s	METAL, CHIP 22k 5% 1/10W
R301	1-216-065-00	s	METAL, CHIP 4.7k 5% 1/10W
R302	1-216-025-91	s	METAL, CHIP 100 5% 1/10W
R303	1-216-065-00	s	METAL, CHIP 4.7k 5% 1/10W
R304	1-216-049-91	s	METAL, CHIP 1k 5% 1/10W
R305	1-216-049-91	s	METAL, CHIP 1k 5% 1/10W
R306	1-216-033-00	s	METAL, CHIP 220 5% 1/10W
R307	1-216-057-00	s	METAL, CHIP 2.2k 5% 1/10W
R308	1-216-057-00	s	METAL, CHIP 2.2k 5% 1/10W
R309	1-216-049-91	s	METAL, CHIP 1k 5% 1/10W
R310	1-216-049-91	s	METAL, CHIP 1k 5% 1/10W
R311	1-216-659-11	s	METAL, CHIP 2.2k 0.5% 1/10W
R312	1-216-627-11	s	METAL, CHIP 100 0.5% 1/10W
R313	1-216-295-91	s	RES, CHIP 0
R314	1-216-661-11	s	METAL, CHIP 2.7k 0.5% 1/10W
R315	1-216-065-00	s	METAL, CHIP 4.7k 5% 1/10W
R316	1-216-025-91	s	METAL, CHIP 100 5% 1/10W
R317	1-216-647-11	s	METAL, CHIP 680 0.5% 1/10W
R318	1-216-017-91	s	METAL, CHIP 47 5% 1/10W
R319	1-216-657-11	s	METAL, CHIP 1.8k 0.5% 1/10W
R320	1-216-065-00	s	METAL, CHIP 4.7k 5% 1/10W
R321	1-216-025-91	s	METAL, CHIP 100 5% 1/10W
R322	1-216-643-11	s	METAL, CHIP 470 0.5% 1/10W
R323	1-216-653-11	s	METAL, CHIP 1.2k 0.5% 1/10W
R324	1-216-643-11	s	METAL, CHIP 470 0.5% 1/10W
R325	1-216-643-11	s	METAL, CHIP 470 0.5% 1/10W
R326	1-216-647-11	s	METAL, CHIP 680 0.5% 1/10W
R327	1-216-065-00	s	METAL, CHIP 4.7k 5% 1/10W
R328	1-216-639-11	s	METAL, CHIP 330 0.5% 1/10W
R329	1-216-049-91	s	METAL, CHIP 1k 5% 1/10W
R330	1-216-033-00	s	METAL, CHIP 220 5% 1/10W
R331	1-216-049-91	s	METAL, CHIP 1k 5% 1/10W
R332	1-216-049-91	s	METAL, CHIP 1k 5% 1/10W
R333	1-216-049-91	s	METAL, CHIP 1k 5% 1/10W
R336	1-216-061-00	s	METAL, CHIP 3.3k 5% 1/10W
R337	1-216-683-11	s	METAL, CHIP 22k 0.5% 1/10W
R338	1-216-667-11	s	METAL, CHIP 4.7k 0.5% 1/10W
R339	1-216-049-91	s	METAL, CHIP 1k 5% 1/10W
R340	1-216-643-11	s	METAL, CHIP 470 0.5% 1/10W
R341	1-216-643-11	s	METAL, CHIP 470 0.5% 1/10W
R342	1-216-651-11	s	METAL, CHIP 1k 0.5% 1/10W
R343	1-216-053-00	s	METAL, CHIP 1.5k 5% 1/10W
R344	1-216-025-91	s	METAL, CHIP 100 5% 1/10W
R345	1-216-643-11	s	METAL, CHIP 470 0.5% 1/10W
R346	1-216-077-00	s	METAL, CHIP 15k 5% 1/10W
R347	1-216-057-00	s	METAL, CHIP 2.2k 5% 1/10W

(IO-149/149A BOARD; Suffix -13)

Ref. No. or Q'ty	Part No.	SP	Description
R348	1-216-655-11	s	METAL, CHIP 1.5k 0.5% 1/10W
R349	1-216-025-91	s	METAL, CHIP 100 5% 1/10W
R350	1-216-643-11	s	METAL, CHIP 470 0.5% 1/10W
R351	1-216-057-00	s	METAL, CHIP 2.2k 5% 1/10W
R352	1-216-634-11	s	METAL, CHIP 200 0.5% 1/10W
R354	1-216-057-00	s	METAL, CHIP 2.2k 5% 1/10W
R357	1-216-655-11	s	METAL, CHIP 1.5k 0.5% 1/10W
R359	1-216-057-00	s	METAL, CHIP 2.2k 5% 1/10W
R361	1-216-651-11	s	METAL, CHIP 1k 0.5% 1/10W
R362	1-216-025-91	s	METAL, CHIP 100 5% 1/10W
R363	1-216-025-91	s	METAL, CHIP 100 5% 1/10W
R364	1-216-049-91	s	METAL, CHIP 1k 5% 1/10W
R365	1-216-025-91	s	METAL, CHIP 100 5% 1/10W
R366	1-216-651-11	s	METAL, CHIP 1k 0.5% 1/10W
R367	1-216-653-11	s	METAL, CHIP 1.2k 0.5% 1/10W
R368	1-216-049-91	s	METAL, CHIP 1k 5% 1/10W
R369	1-216-049-91	s	METAL, CHIP 1k 5% 1/10W
R370	1-216-651-11	s	METAL, CHIP 1k 0.5% 1/10W
R371	1-216-057-00	s	METAL, CHIP 2.2k 5% 1/10W
R372	1-216-049-91	s	METAL, CHIP 1k 5% 1/10W
R373	1-216-049-91	s	METAL, CHIP 1k 5% 1/10W
R374	1-216-653-11	s	METAL, CHIP 1.2k 0.5% 1/10W
R375	1-216-653-11	s	METAL, CHIP 1.2k 0.5% 1/10W
R376	1-216-049-91	s	METAL, CHIP 1k 5% 1/10W
R377	1-216-049-91	s	METAL, CHIP 1k 5% 1/10W
R378	1-216-065-00	s	METAL, CHIP 4.7k 5% 1/10W
R379	1-216-025-91	s	METAL, CHIP 100 5% 1/10W
R380	1-216-065-00	s	METAL, CHIP 4.7k 5% 1/10W
R381	1-216-025-91	s	METAL, CHIP 100 5% 1/10W
R382	1-216-053-00	s	METAL, CHIP 1.5k 5% 1/10W
R383	1-216-049-91	s	METAL, CHIP 1k 5% 1/10W
R384	1-216-049-91	s	METAL, CHIP 1k 5% 1/10W
R385	1-216-049-91	s	METAL, CHIP 1k 5% 1/10W
R386	1-216-049-91	s	METAL, CHIP 1k 5% 1/10W
R387	1-216-049-91	s	METAL, CHIP 1k 5% 1/10W
R388	1-216-049-91	s	METAL, CHIP 1k 5% 1/10W
R389	1-216-639-11	s	METAL, CHIP 330 0.5% 1/10W
R390	1-216-639-11	s	METAL, CHIP 330 0.5% 1/10W
R391	1-216-057-00	s	METAL, CHIP 2.2k 5% 1/10W
R392	1-216-041-00	s	METAL, CHIP 470 5% 1/10W
R393	1-216-057-00	s	METAL, CHIP 2.2k 5% 1/10W
R394	1-216-025-91	s	METAL, CHIP 100 5% 1/10W
R395	1-216-025-91	s	METAL, CHIP 100 5% 1/10W
R396	1-216-025-91	s	METAL, CHIP 100 5% 1/10W
R397	1-216-025-91	s	METAL, CHIP 100 5% 1/10W
R398	1-216-055-00	s	METAL, CHIP 1.8k 5% 1/10W
R399	1-216-065-00	s	METAL, CHIP 4.7k 5% 1/10W
R400	1-216-065-00	s	METAL, CHIP 4.7k 5% 1/10W
R401	1-216-065-00	s	METAL, CHIP 4.7k 5% 1/10W
R402	1-216-065-00	s	METAL, CHIP 4.7k 5% 1/10W
R403	1-216-669-11	s	METAL, CHIP 5.6k 0.5% 1/10W
R404	1-216-659-11	s	METAL, CHIP 2.2k 0.5% 1/10W
R405	1-216-113-00	s	METAL, CHIP 470k 5% 1/10W
R406	1-216-049-91	s	METAL, CHIP 1k 5% 1/10W
R407	1-216-049-91	s	METAL, CHIP 1k 5% 1/10W
R408	1-216-049-91	s	METAL, CHIP 1k 5% 1/10W
R409	1-216-057-00	s	METAL, CHIP 2.2k 5% 1/10W
R410	1-216-669-11	s	METAL, CHIP 5.6k 0.5% 1/10W
R411	1-216-659-11	s	METAL, CHIP 2.2k 0.5% 1/10W

(IO-149/149A BOARD; Suffix -13)

Ref. No. or Q'ty	Part No.	SP	Description
R412	1-216-055-00	s	METAL, CHIP 1.8k 5% 1/10W
R413	1-216-057-00	s	METAL, CHIP 2.2k 5% 1/10W
R414	1-216-017-91	s	METAL, CHIP 47 5% 1/10W
R415	1-216-017-91	s	METAL, CHIP 47 5% 1/10W
R416	1-216-073-00	s	METAL, CHIP 10k 5% 1/10W
R417	1-216-643-11	s	METAL, CHIP 470 0.5% 1/10W
R418	1-216-643-11	s	METAL, CHIP 470 0.5% 1/10W
R419	1-216-653-11	s	METAL, CHIP 1.2k 0.5% 1/10W
R420	1-216-643-11	s	METAL, CHIP 470 0.5% 1/10W
R421	1-216-041-00	s	METAL, CHIP 470 5% 1/10W
R422	1-216-653-11	s	METAL, CHIP 1.2k 0.5% 1/10W
R423	1-216-643-11	s	METAL, CHIP 470 0.5% 1/10W
R424	1-216-643-11	s	METAL, CHIP 470 0.5% 1/10W
R425	1-216-663-11	s	METAL, CHIP 3.3k 0.5% 1/10W
R426	1-216-663-11	s	METAL, CHIP 3.3k 0.5% 1/10W
R427	1-216-053-00	s	METAL, CHIP 1.5k 5% 1/10W
R428	1-216-651-11	s	METAL, CHIP 1k 0.5% 1/10W
R429	1-216-639-11	s	METAL, CHIP 330 0.5% 1/10W
R430	1-216-651-11	s	METAL, CHIP 1k 0.5% 1/10W
R431	1-216-639-11	s	METAL, CHIP 330 0.5% 1/10W
R432	1-216-065-00	s	METAL, CHIP 4.7k 5% 1/10W
R433	1-216-065-00	s	METAL, CHIP 4.7k 5% 1/10W
R434	1-216-651-11	s	METAL, CHIP 1k 0.5% 1/10W[For NTSC]
R434	1-216-656-11	s	METAL, CHIP 1.6k 0.5% 1/10W [For PAL]
R435	1-216-660-11	s	METAL, CHIP 2.4k 0.5% 1/10W [For NTSC]
R435	1-216-657-11	s	METAL, CHIP 1.8k 0.5% 1/10W [For PAL]
R436	1-216-049-91	s	METAL, CHIP 1k 5% 1/10W
R437	1-216-081-00	s	METAL, CHIP 22k 5% 1/10W
R438	1-216-653-11	s	METAL, CHIP 1.2k 0.5% 1/10W
R439	1-216-667-11	s	METAL, CHIP 4.7k 0.5% 1/10W
R440	1-216-651-11	s	METAL, CHIP 1k 0.5% 1/10W
R441	1-216-624-11	s	METAL, CHIP 75 0.5% 1/10W
R442	1-216-624-11	s	METAL, CHIP 75 0.5% 1/10W
R443	1-216-624-11	s	METAL, CHIP 75 0.5% 1/10W
R444	1-216-646-11	s	METAL, CHIP 620 0.5% 1/10W
R445	1-216-045-00	s	METAL, CHIP 680 5% 1/10W
R446	1-216-041-00	s	METAL, CHIP 470 5% 1/10W
R447	1-216-651-11	s	METAL, CHIP 1k 0.5% 1/10W[For NTSC]
R447	1-216-656-11	s	METAL, CHIP 1.6k 0.5% 1/10W [For PAL]
R448	1-216-041-00	s	METAL, CHIP 470 5% 1/10W
R449	1-216-660-11	s	METAL, CHIP 2.4k 0.5% 1/10W [For NTSC]
R449	1-216-657-11	s	METAL, CHIP 1.8k 0.5% 1/10W [For PAL]
R450	1-216-624-11	s	METAL, CHIP 75 0.5% 1/10W
R451	1-216-097-91	s	METAL, CHIP 100k 5% 1/10W
R452	1-216-073-00	s	METAL, CHIP 10k 5% 1/10W
R453	1-216-081-00	s	METAL, CHIP 22k 5% 1/10W

(IO-149/149A BOARD; Suffix -13)

Ref. No. or Q'ty	Part No.	SP	Description
R454	1-216-095-00	s	METAL, CHIP 82k 5% 1/10W
R455	1-216-073-00	s	METAL, CHIP 10k 5% 1/10W
R456	1-216-624-11	s	METAL, CHIP 75 0.5% 1/10W
R457	1-216-624-11	s	METAL, CHIP 75 0.5% 1/10W
R458	1-216-675-11	s	METAL, CHIP 10k 0.5% 1/10W
R459	1-216-624-11	s	METAL, CHIP 75 0.5% 1/10W
R501	1-216-089-91	s	METAL, CHIP 47k 5% 1/10W
R502	1-216-683-11	s	METAL, CHIP 22k 0.5% 1/10W
R503	1-216-659-11	s	METAL, CHIP 2.2k 0.5% 1/10W [For NTSC]
R503	1-216-655-11	s	METAL, CHIP 1.5k 0.5% 1/10W [For PAL]
R504	1-216-675-11	s	METAL, CHIP 10k 0.5% 1/10W
R505	1-216-675-11	s	METAL, CHIP 10k 0.5% 1/10W
R506	1-216-659-11	s	METAL, CHIP 2.2k 0.5% 1/10W [For NTSC]
R507	1-216-295-91	s	RES, CHIP 0 [For NTSC]
R507	1-216-655-11	s	METAL, CHIP 1.5k 0.5% 1/10W [For PAL]
R508	1-216-073-00	s	METAL, CHIP 10k 5% 1/10W
R509	1-216-669-11	s	METAL, CHIP 5.6k 0.5% 1/10W
R510	1-216-675-11	s	METAL, CHIP 10k 0.5% 1/10W
R511	1-216-663-11	s	METAL, CHIP 3.3k 0.5% 1/10W [For NTSC]
R511	1-216-667-11	s	METAL, CHIP 4.7k 0.5% 1/10W [For PAL]
R512	1-216-671-11	s	METAL, CHIP 6.8k 0.5% 1/10W [For NTSC]
R513	1-216-677-11	s	METAL, CHIP 12k 0.5% 1/10W
R515	1-216-057-00	s	METAL, CHIP 2.2k 5% 1/10W
R516	1-216-691-11	s	METAL, CHIP 47k 0.5% 1/10W
R517	1-216-677-11	s	METAL, CHIP 12k 0.5% 1/10W
R518	1-216-679-11	s	METAL, CHIP 15k 0.5% 1/10W
R519	1-216-671-11	s	METAL, CHIP 6.8k 0.5% 1/10W
R520	1-216-679-11	s	METAL, CHIP 15k 0.5% 1/10W
R521	1-216-089-91	s	METAL, CHIP 47k 5% 1/10W
R522	1-216-097-91	s	METAL, CHIP 100k 5% 1/10W
R523	1-216-089-91	s	METAL, CHIP 47k 5% 1/10W
R524	1-216-675-11	s	METAL, CHIP 10k 0.5% 1/10W
R525	1-216-651-11	s	METAL, CHIP 1k 0.5% 1/10W
R526	1-216-675-11	s	METAL, CHIP 10k 0.5% 1/10W
R527	1-216-665-11	s	METAL, CHIP 3.9k 0.5% 1/10W
R528	1-216-677-11	s	METAL, CHIP 12k 0.5% 1/10W
R529	1-216-049-91	s	METAL, CHIP 1k 5% 1/10W
R530	1-216-065-00	s	METAL, CHIP 4.7k 5% 1/10W
R531	1-216-049-91	s	METAL, CHIP 1k 5% 1/10W
R532	1-216-049-91	s	METAL, CHIP 1k 5% 1/10W
R533	1-216-677-11	s	METAL, CHIP 12k 0.5% 1/10W
R534	1-216-051-00	s	METAL, CHIP 1.2k 5% 1/10W
R535	1-216-675-11	s	METAL, CHIP 10k 0.5% 1/10W
R536	1-216-059-00	s	METAL, CHIP 2.7k 5% 1/10W

(IO-149/149A BOARD; Suffix -13)

Ref. No. or Q'ty	Part No.	SP	Description
R537	1-216-643-11	s	METAL, CHIP 470 0.5% 1/10W
R538	1-216-679-11	s	METAL, CHIP 15k 0.5% 1/10W
R539	1-216-049-91	s	METAL, CHIP 1k 5% 1/10W
R540	1-216-057-00	s	METAL, CHIP 2.2k 5% 1/10W
R541	1-216-651-11	s	METAL, CHIP 1k 0.5% 1/10W
R542	1-216-057-00	s	METAL, CHIP 2.2k 5% 1/10W
R543	1-216-073-00	s	METAL, CHIP 10k 5% 1/10W
R544	1-216-651-11	s	METAL, CHIP 1k 0.5% 1/10W
R545	1-216-683-11	s	METAL, CHIP 22k 0.5% 1/10W
R546	1-216-057-00	s	METAL, CHIP 2.2k 5% 1/10W
R547	1-216-017-91	s	METAL, CHIP 47 5% 1/10W
R548	1-216-683-11	s	METAL, CHIP 22k 0.5% 1/10W
R549	1-216-666-11	s	METAL, CHIP 4.3k 0.5% 1/10W
R550	1-216-655-11	s	METAL, CHIP 1.5k 0.5% 1/10W
R551	1-216-097-91	s	METAL, CHIP 100k 5% 1/10W
R552	1-216-059-00	s	METAL, CHIP 2.7k 5% 1/10W
R553	1-216-671-11	s	METAL, CHIP 6.8k 0.5% 1/10W
R554	1-216-655-11	s	METAL, CHIP 1.5k 0.5% 1/10W
R555	1-216-059-00	s	METAL, CHIP 2.7k 5% 1/10W
R556	1-216-073-00	s	METAL, CHIP 10k 5% 1/10W
R557	1-216-683-11	s	METAL, CHIP 22k 0.5% 1/10W
R558	1-216-017-91	s	METAL, CHIP 47 5% 1/10W
R559	1-216-687-11	s	METAL, CHIP 33k 0.5% 1/10W
R560	1-216-679-11	s	METAL, CHIP 15k 0.5% 1/10W
R561	1-216-683-11	s	METAL, CHIP 22k 0.5% 1/10W
R562	1-216-069-00	s	METAL, CHIP 6.8k 5% 1/10W
R563	1-216-687-11	s	METAL, CHIP 33k 0.5% 1/10W
R564	1-216-687-11	s	METAL, CHIP 33k 0.5% 1/10W
R565	1-216-047-91	s	METAL, CHIP 820 5% 1/10W
R566	1-216-049-91	s	METAL, CHIP 1k 5% 1/10W
R567	1-216-691-11	s	METAL, CHIP 47k 0.5% 1/10W
R568	1-216-025-91	s	METAL, CHIP 100 5% 1/10W
R569	1-216-041-00	s	METAL, CHIP 470 5% 1/10W
R570	1-216-669-11	s	METAL, CHIP 5.6k 0.5% 1/10W
R571	1-216-081-00	s	METAL, CHIP 22k 5% 1/10W
R572	1-216-049-91	s	METAL, CHIP 1k 5% 1/10W
R573	1-216-059-00	s	METAL, CHIP 2.7k 5% 1/10W
R574	1-216-681-11	s	METAL, CHIP 18k 0.5% 1/10W
R575	1-216-041-00	s	METAL, CHIP 470 5% 1/10W
R576	1-216-624-11	s	METAL, CHIP 75 0.5% 1/10W
R577	1-216-687-11	s	METAL, CHIP 33k 0.5% 1/10W
R579	1-218-772-11	s	METAL, CHIP 680k 0.5% 1/10W
R580	1-216-017-91	s	METAL, CHIP 47 5% 1/10W
R581	1-216-025-91	s	METAL, CHIP 100 5% 1/10W
R582	1-216-061-00	s	METAL, CHIP 3.3k 5% 1/10W
R583	1-216-097-91	s	METAL, CHIP 100k 5% 1/10W
R584	1-216-017-91	s	METAL, CHIP 47 5% 1/10W
R585	1-216-049-91	s	METAL, CHIP 1k 5% 1/10W
R586	1-216-049-91	s	METAL, CHIP 1k 5% 1/10W
R587	1-216-049-91	s	METAL, CHIP 1k 5% 1/10W
R588	1-216-093-00	s	METAL, CHIP 68k 5% 1/10W
R589	1-216-049-91	s	METAL, CHIP 1k 5% 1/10W
R590	1-216-666-11	s	METAL, CHIP 4.3k 0.5% 1/10W
R591	1-216-045-00	s	METAL, CHIP 680 5% 1/10W
R592	1-216-081-00	s	METAL, CHIP 22k 5% 1/10W
R593	1-216-673-11	s	METAL, CHIP 8.2k 0.5% 1/10W
R594	1-216-025-91	s	METAL, CHIP 100 5% 1/10W
R595	1-216-025-91	s	METAL, CHIP 100 5% 1/10W
R596	1-216-643-11	s	METAL, CHIP 470 0.5% 1/10W

(IO-149/149A BOARD; Suffix -13)

Ref. No. or Q'ty	Part No.	SP	Description
R597	1-216-643-11	s	METAL, CHIP 470 0.5% 1/10W
R601	1-216-089-91	s	METAL, CHIP 47k 5% 1/10W
R602	1-216-097-91	s	METAL, CHIP 100k 5% 1/10W[For NTSC]
R603	1-216-295-91	s	RES, CHIP 0 [For PAL]
R604	1-216-097-91	s	METAL, CHIP 100k 5% 1/10W[For NTSC]
R605	1-216-295-91	s	RES, CHIP 0 [For PAL]
R606	1-216-073-00	s	METAL, CHIP 10k 5% 1/10W
R607	1-216-065-00	s	METAL, CHIP 4.7k 5% 1/10W
R608	1-216-017-91	s	METAL, CHIP 47 5% 1/10W
R609	1-216-295-91	s	RES, CHIP 0
R610	1-216-049-91	s	METAL, CHIP 1k 5% 1/10W
R612	1-216-085-00	s	METAL, CHIP 33k 5% 1/10W
R613	1-216-065-00	s	METAL, CHIP 4.7k 5% 1/10W[For NTSC]
R614	1-216-073-00	s	METAL, CHIP 10k 5% 1/10W
R615	1-216-065-00	s	METAL, CHIP 4.7k 5% 1/10W [For PAL]
R616	1-216-017-91	s	METAL, CHIP 47 5% 1/10W
R617	1-216-085-00	s	METAL, CHIP 33k 5% 1/10W
R618	1-216-085-00	s	METAL, CHIP 33k 5% 1/10W
R619	1-216-658-11	s	METAL, CHIP 2k 0.5% 1/10W
R620	1-216-051-00	s	METAL, CHIP 1.2k 5% 1/10W
R621	1-216-658-11	s	METAL, CHIP 2k 0.5% 1/10W
R622	1-216-051-00	s	METAL, CHIP 1.2k 5% 1/10W
R623	1-216-643-11	s	METAL, CHIP 470 0.5% 1/10W
R624	1-216-037-00	s	METAL, CHIP 330 5% 1/10W
R625	1-216-648-11	s	METAL, CHIP 750 0.5% 1/10W
R626	1-216-037-00	s	METAL, CHIP 330 5% 1/10W
R627	1-216-071-00	s	METAL, CHIP 8.2k 5% 1/10W
R628	1-216-686-11	s	METAL, CHIP 30k 0.5% 1/10W
R629	1-216-069-00	s	METAL, CHIP 6.8k 5% 1/10W
R630	1-216-686-11	s	METAL, CHIP 30k 0.5% 1/10W
R631	1-216-041-00	s	METAL, CHIP 470 5% 1/10W
R632	1-216-041-00	s	METAL, CHIP 470 5% 1/10W
R633	1-216-017-91	s	METAL, CHIP 47 5% 1/10W
R634	1-216-097-91	s	METAL, CHIP 100k 5% 1/10W
R635	1-216-667-11	s	METAL, CHIP 4.7k 0.5% 1/10W
R637	1-216-115-00	s	METAL, CHIP 560k 5% 1/10W[For NTSC]
R637	1-218-772-11	s	METAL, CHIP 680k 0.5% 1/10W [For PAL]
R638	1-216-641-11	s	METAL, CHIP 390 0.5% 1/10W [For NTSC]
R638	1-216-659-11	s	METAL, CHIP 2.2k 0.5% 1/10W [For PAL]
R639	1-216-017-91	s	METAL, CHIP 47 5% 1/10W
R640	1-216-667-11	s	METAL, CHIP 4.7k 0.5% 1/10W [For NTSC]
R640	1-216-663-11	s	METAL, CHIP 3.3k 0.5% 1/10W [For PAL]
R641	1-216-641-11	s	METAL, CHIP 390 0.5% 1/10W [For NTSC]
R641	1-216-650-11	s	METAL, CHIP 910 0.5% 1/10W[For PAL]
R642	1-216-665-11	s	METAL, CHIP 3.9k 0.5% 1/10W

(IO-149/149A BOARD; Suffix -13)

Ref. No. or Q'ty	Part No.	SP	Description
R643	1-216-677-11	s	METAL, CHIP 12k 0.5% 1/10W
R644	1-216-638-11	s	METAL, CHIP 300 0.5% 1/10W [For NTSC]
R644	1-216-635-11	s	METAL, CHIP 220 0.5% 1/10W[For PAL]
R645	1-216-638-11	s	METAL, CHIP 300 0.5% 1/10W [For NTSC]
R645	1-216-635-11	s	METAL, CHIP 220 0.5% 1/10W[For PAL]
R646	1-216-049-91	s	METAL, CHIP 1k 5% 1/10W
R647	1-216-049-91	s	METAL, CHIP 1k 5% 1/10W
R648	1-216-037-00	s	METAL, CHIP 330 5% 1/10W
R649	1-216-037-00	s	METAL, CHIP 330 5% 1/10W
R650	1-216-049-91	s	METAL, CHIP 1k 5% 1/10W
R651	1-216-049-91	s	METAL, CHIP 1k 5% 1/10W
R652	1-216-025-91	s	METAL, CHIP 100 5% 1/10W
R653	1-216-025-91	s	METAL, CHIP 100 5% 1/10W
R654	1-216-025-91	s	METAL, CHIP 100 5% 1/10W
R655	1-216-049-91	s	METAL, CHIP 1k 5% 1/10W
R656	1-216-049-91	s	METAL, CHIP 1k 5% 1/10W
R657	1-216-025-91	s	METAL, CHIP 100 5% 1/10W
R658	1-216-025-91	s	METAL, CHIP 100 5% 1/10W
R659	1-216-049-91	s	METAL, CHIP 1k 5% 1/10W
R701	1-216-634-11	s	METAL, CHIP 200 0.5% 1/10W
R702	1-216-669-11	s	METAL, CHIP 5.6k 0.5% 1/10W
R703	1-216-627-11	s	METAL, CHIP 100 0.5% 1/10W
R704	1-216-651-11	s	METAL, CHIP 1k 0.5% 1/10W
R705	1-216-017-91	s	METAL, CHIP 47 5% 1/10W
R706	1-216-089-91	s	METAL, CHIP 47k 5% 1/10W
R707	1-216-059-00	s	METAL, CHIP 2.7k 5% 1/10W
R708	1-216-037-00	s	METAL, CHIP 330 5% 1/10W
R709	1-216-121-91	s	METAL, CHIP 1M 5% 1/10W
R711	1-216-049-91	s	METAL, CHIP 1k 5% 1/10W
R712	1-216-651-11	s	METAL, CHIP 1k 0.5% 1/10W
R713	1-216-033-00	s	METAL, CHIP 220 5% 1/10W
R714	1-216-085-00	s	METAL, CHIP 33k 5% 1/10W
R715	1-216-651-11	s	METAL, CHIP 1k 0.5% 1/10W
R716	1-216-025-91	s	METAL, CHIP 100 5% 1/10W
R717	1-216-109-00	s	METAL, CHIP 330k 5% 1/10W
R718	1-216-049-91	s	METAL, CHIP 1k 5% 1/10W
R719	1-216-073-00	s	METAL, CHIP 10k 5% 1/10W
R720	1-216-059-00	s	METAL, CHIP 2.7k 5% 1/10W
R721	1-216-059-00	s	METAL, CHIP 2.7k 5% 1/10W
R722	1-216-033-00	s	METAL, CHIP 220 5% 1/10W
R723	1-216-047-91	s	METAL, CHIP 820 5% 1/10W
R724	1-216-635-11	s	METAL, CHIP 220 0.5% 1/10W
R725	1-216-669-11	s	METAL, CHIP 5.6k 0.5% 1/10W
R726	1-216-627-11	s	METAL, CHIP 100 0.5% 1/10W
R727	1-216-651-11	s	METAL, CHIP 1k 0.5% 1/10W
R728	1-216-025-91	s	METAL, CHIP 100 5% 1/10W
R729	1-216-057-00	s	METAL, CHIP 2.2k 5% 1/10W
R730	1-216-634-11	s	METAL, CHIP 200 0.5% 1/10W
R731	1-216-634-11	s	METAL, CHIP 200 0.5% 1/10W
R732	1-216-049-91	s	METAL, CHIP 1k 5% 1/10W
R733	1-216-669-11	s	METAL, CHIP 5.6k 0.5% 1/10W
R734	1-216-669-11	s	METAL, CHIP 5.6k 0.5% 1/10W
R735	1-216-049-91	s	METAL, CHIP 1k 5% 1/10W
R736	1-216-049-91	s	METAL, CHIP 1k 5% 1/10W

(IO-149/149A BOARD; Suffix -13)

Ref. No. or Q'ty	Part No.	SP	Description
R737	1-216-097-91	s	METAL, CHIP 100k 5% 1/10W[For NTSC]
R738	1-216-049-91	s	METAL, CHIP 1k 5% 1/10W
R739	1-216-033-00	s	METAL, CHIP 220 5% 1/10W
R740	1-216-049-91	s	METAL, CHIP 1k 5% 1/10W
R741	1-216-049-91	s	METAL, CHIP 1k 5% 1/10W
R742	1-216-049-91	s	METAL, CHIP 1k 5% 1/10W
R743	1-216-073-00	s	METAL, CHIP 10k 5% 1/10W [For NTSC]
R744	1-216-073-00	s	METAL, CHIP 10k 5% 1/10W
R745	1-208-625-11	s	METAL, CHIP 2.25k 0.1% 1/16W
R746	1-208-627-11	s	METAL, CHIP 4.41k 0.1% 1/16W
R747	1-208-630-11	s	METAL, CHIP 11.49 0.1% 1/16W
R748	1-216-625-11	s	METAL, CHIP 82 0.5% 1/10W
R749	1-216-622-11	s	METAL, CHIP 62 0.5% 1/10W
R750	1-216-625-11	s	METAL, CHIP 82 0.5% 1/10W
R751	1-216-625-11	s	METAL, CHIP 82 0.5% 1/10W
R752	1-216-057-00	s	METAL, CHIP 2.2k 5% 1/10W
R754	1-216-057-00	s	METAL, CHIP 2.2k 5% 1/10W
R755	1-208-623-11	s	METAL, CHIP 1.43k 0.1% 1/16W
R756	1-208-625-11	s	METAL, CHIP 2.25k 0.1% 1/16W
R757	1-208-627-11	s	METAL, CHIP 4.41k 0.1% 1/16W
R758	1-216-657-11	s	METAL, CHIP 1.8k 0.5% 1/10W
R759	1-208-625-11	s	METAL, CHIP 2.25k 0.1% 1/16W
R760	1-208-630-11	s	METAL, CHIP 11.49 0.1% 1/16W
R761	1-216-055-00	s	METAL, CHIP 1.8k 5% 1/10W
R762	1-216-049-91	s	METAL, CHIP 1k 5% 1/10W
R763	1-216-055-00	s	METAL, CHIP 1.8k 5% 1/10W
R764	1-216-097-91	s	METAL, CHIP 100k 5% 1/10W
R765	1-216-643-11	s	METAL, CHIP 470 0.5% 1/10W
R766	1-216-041-00	s	METAL, CHIP 470 5% 1/10W
R767	1-216-643-11	s	METAL, CHIP 470 0.5% 1/10W
R768	1-216-041-00	s	METAL, CHIP 470 5% 1/10W
R769	1-216-658-11	s	METAL, CHIP 2k 0.5% 1/10W[For NTSC]
R769	1-216-645-11	s	METAL, CHIP 560 0.5% 1/10W[For PAL]
R770	1-216-643-11	s	METAL, CHIP 470 0.5% 1/10W
R771	1-216-651-11	s	METAL, CHIP 1k 0.5% 1/10W
R772	1-216-658-11	s	METAL, CHIP 2k 0.5% 1/10W[For NTSC]
R772	1-216-645-11	s	METAL, CHIP 560 0.5% 1/10W[For PAL]
R773	1-216-643-11	s	METAL, CHIP 470 0.5% 1/10W
R774	1-216-618-11	s	METAL, CHIP 43 0.50% 1/10W
R775	1-216-651-11	s	METAL, CHIP 1k 0.5% 1/10W
R776	1-218-477-11	s	METAL, CHIP 220 5% 1/4W
R777	1-218-477-11	s	METAL, CHIP 220 5% 1/4W
R778	1-216-045-00	s	METAL, CHIP 680 5% 1/10W
R779	1-216-049-91	s	METAL, CHIP 1k 5% 1/10W
R780	1-216-049-91	s	METAL, CHIP 1k 5% 1/10W
R781	1-216-049-91	s	METAL, CHIP 1k 5% 1/10W
R782	1-216-057-00	s	METAL, CHIP 2.2k 5% 1/10W
R783	1-216-057-00	s	METAL, CHIP 2.2k 5% 1/10W
R784	1-216-057-00	s	METAL, CHIP 2.2k 5% 1/10W
R785	1-216-057-00	s	METAL, CHIP 2.2k 5% 1/10W
R786	1-216-045-00	s	METAL, CHIP 680 5% 1/10W
R787	1-216-073-00	s	METAL, CHIP 10k 5% 1/10W
R788	1-216-025-91	s	METAL, CHIP 100 5% 1/10W
R789	1-216-639-11	s	METAL, CHIP 330 0.5% 1/10W
R790	1-216-025-91	s	METAL, CHIP 100 5% 1/10W
R794	1-216-049-91	s	METAL, CHIP 1k 5% 1/10W
R795	1-216-049-91	s	METAL, CHIP 1k 5% 1/10W
R796	1-216-049-91	s	METAL, CHIP 1k 5% 1/10W
R797	1-216-639-11	s	METAL, CHIP 330 0.5% 1/10W

(IO-149/149A BOARD; Suffix -13)

Ref. No. or Q'ty	Part No.	SP	Description
R798	1-216-045-00	s	METAL, CHIP 680 5% 1/10W
R799	1-216-641-11	s	METAL, CHIP 390 0.5% 1/10W
R800	1-216-049-91	s	METAL, CHIP 1k 5% 1/10W
R801	1-216-017-91	s	METAL, CHIP 47 5% 1/10W
R802	1-216-057-00	s	METAL, CHIP 2.2k 5% 1/10W
R803	1-216-037-00	s	METAL, CHIP 330 5% 1/10W
R804	1-216-065-00	s	METAL, CHIP 4.7k 5% 1/10W
R805	1-216-049-91	s	METAL, CHIP 1k 5% 1/10W
R806	1-216-065-00	s	METAL, CHIP 4.7k 5% 1/10W
R807	1-216-057-00	s	METAL, CHIP 2.2k 5% 1/10W
R808	1-216-025-91	s	METAL, CHIP 100 5% 1/10W
R809	1-216-073-00	s	METAL, CHIP 10k 5% 1/10W [For NTSC]
R810	1-216-077-00	s	METAL, CHIP 15k 5% 1/10W [For NTSC]
R811	1-216-065-00	s	METAL, CHIP 4.7k 5% 1/10W
R812	1-216-041-00	s	METAL, CHIP 470 5% 1/10W [For NTSC]
R813	1-216-049-91	s	METAL, CHIP 1k 5% 1/10W
R814	1-216-025-91	s	METAL, CHIP 100 5% 1/10W [For NTSC]
R815	1-216-085-00	s	METAL, CHIP 33k 5% 1/10W [For NTSC]
R816	1-216-085-00	s	METAL, CHIP 33k 5% 1/10W [For NTSC]
R817	1-216-121-91	s	METAL, CHIP 1M 5% 1/10W
R818	1-216-057-00	s	METAL, CHIP 2.2k 5% 1/10W
R819	1-216-049-91	s	METAL, CHIP 1k 5% 1/10W
R820	1-216-073-00	s	METAL, CHIP 10k 5% 1/10W [For NTSC]
R821	1-216-081-00	s	METAL, CHIP 22k 5% 1/10W
R901	1-216-017-91	s	METAL, CHIP 47 5% 1/10W
R902	1-216-017-91	s	METAL, CHIP 47 5% 1/10W
R903	1-216-295-91	s	RES, CHIP 0
R905	1-216-073-00	s	METAL, CHIP 10k 5% 1/10W
R906	1-216-073-00	s	METAL, CHIP 10k 5% 1/10W
R907	1-216-089-91	s	METAL, CHIP 47k 5% 1/10W
R908	1-216-663-11	s	METAL, CHIP 3.3k 0.5% 1/10W
R909	1-216-663-11	s	METAL, CHIP 3.3k 0.5% 1/10W
R910	1-216-663-11	s	METAL, CHIP 3.3k 0.5% 1/10W
R911	1-216-073-00	s	METAL, CHIP 10k 5% 1/10W
R912	1-216-085-00	s	METAL, CHIP 33k 5% 1/10W
R913	1-216-684-91	s	METAL, CHIP 24k 0.5% 1/10W
R914	1-216-669-11	s	METAL, CHIP 5.6k 0.5% 1/10W
R915	1-216-673-11	s	METAL, CHIP 8.2k 0.5% 1/10W
R916	1-216-687-11	s	METAL, CHIP 33k 0.5% 1/10W
R917	1-216-635-11	s	METAL, CHIP 220 0.5% 1/10W
R918	1-216-635-11	s	METAL, CHIP 220 0.5% 1/10W
R919	1-216-635-11	s	METAL, CHIP 220 0.5% 1/10W
R920	1-216-635-11	s	METAL, CHIP 220 0.5% 1/10W
R921	1-216-679-11	s	METAL, CHIP 15k 0.5% 1/10W [For NTSC]
R922	1-216-683-11	s	METAL, CHIP 22k 0.5% 1/10W
R923	1-216-671-11	s	METAL, CHIP 6.8k 0.5% 1/10W [For NTSC]
R923	1-216-667-11	s	METAL, CHIP 4.7k 0.5% 1/10W [For PAL]
R924	1-216-635-11	s	METAL, CHIP 220 0.5% 1/10W
R925	1-216-635-11	s	METAL, CHIP 220 0.5% 1/10W
R926	1-216-049-91	s	METAL, CHIP 1k 5% 1/10W
R927	1-216-049-91	s	METAL, CHIP 1k 5% 1/10W
R928	1-216-049-91	s	METAL, CHIP 1k 5% 1/10W

(IO-149/149A BOARD; Suffix -13)

Ref. No. or Q'ty	Part No.	SP	Description
R929	1-216-639-11	s	METAL, CHIP 330 0.5% 1/10W
R930	1-216-639-11	s	METAL, CHIP 330 0.5% 1/10W
R931	1-216-639-11	s	METAL, CHIP 330 0.5% 1/10W
R932	1-216-639-11	s	METAL, CHIP 330 0.5% 1/10W
R933	1-216-639-11	s	METAL, CHIP 330 0.5% 1/10W
R934	1-216-639-11	s	METAL, CHIP 330 0.5% 1/10W
R935	1-216-049-91	s	METAL, CHIP 1k 5% 1/10W
R936	1-216-049-91	s	METAL, CHIP 1k 5% 1/10W
R937	1-216-049-91	s	METAL, CHIP 1k 5% 1/10W
R938	1-216-065-00	s	METAL, CHIP 4.7k 5% 1/10W
R939	1-216-645-11	s	METAL, CHIP 560 0.5% 1/10W
R940	1-216-037-00	s	METAL, CHIP 330 5% 1/10W
R941	1-216-049-91	s	METAL, CHIP 1k 5% 1/10W
R944	1-216-049-91	s	METAL, CHIP 1k 5% 1/10W
R945	1-216-065-00	s	METAL, CHIP 4.7k 5% 1/10W
R947	1-216-639-11	s	METAL, CHIP 330 0.5% 1/10W
R948	1-216-025-91	s	METAL, CHIP 100 5% 1/10W
R950	1-216-057-00	s	METAL, CHIP 2.2k 5% 1/10W
R951	1-216-025-91	s	METAL, CHIP 100 5% 1/10W
R952	1-216-049-91	s	METAL, CHIP 1k 5% 1/10W
R953	1-216-646-11	s	METAL, CHIP 620 0.5% 1/10W [For NTSC]
R953	1-216-641-11	s	METAL, CHIP 390 0.5% 1/10W[For PAL]
R954	1-216-057-00	s	METAL, CHIP 2.2k 5% 1/10W
R955	1-216-025-91	s	METAL, CHIP 100 5% 1/10W
R956	1-216-656-11	s	METAL, CHIP 1.6k 0.5% 1/10W
R957	1-216-651-11	s	METAL, CHIP 1k 0.5% 1/10W
R958	1-216-017-91	s	METAL, CHIP 47 5% 1/10W
R959	1-216-646-11	s	METAL, CHIP 620 0.5% 1/10W [For NTSC]
R959	1-216-641-11	s	METAL, CHIP 390 0.5% 1/10W[For PAL]
R960	1-216-049-91	s	METAL, CHIP 1k 5% 1/10W
R961	1-216-656-11	s	METAL, CHIP 1.6k 0.5% 1/10W
R962	1-216-651-11	s	METAL, CHIP 1k 0.5% 1/10W
R963	1-216-635-11	s	METAL, CHIP 220 0.5% 1/10W
R964	1-216-661-11	s	METAL, CHIP 2.7k 0.5% 1/10W
R965	1-216-635-11	s	METAL, CHIP 220 0.5% 1/10W
R966	1-216-661-11	s	METAL, CHIP 2.7k 0.5% 1/10W
R967	1-216-295-91	s	RES, CHIP 0 [For PAL]
R968	1-216-295-91	s	RES, CHIP 0 [For PAL]
R969	1-216-624-11	s	METAL, CHIP 75 0.5% 1/10W[For NTSC]
R969	1-208-755-11	s	METAL, CHIP 75 0.5% 1/10W [For PAL]
R970	1-216-624-11	s	METAL, CHIP 75 0.5% 1/10W[For NTSC]
R970	1-208-755-11	s	METAL, CHIP 75 0.5% 1/10W [For PAL]
R971	1-216-017-91	s	METAL, CHIP 47 5% 1/10W
R972	1-216-017-91	s	METAL, CHIP 47 5% 1/10W
R977	1-216-659-11	s	METAL, CHIP 2.2k 0.5% 1/10W
R978	1-216-639-11	s	METAL, CHIP 330 0.5% 1/10W
R979	1-216-065-00	s	METAL, CHIP 4.7k 5% 1/10W
R980	1-216-049-91	s	METAL, CHIP 1k 5% 1/10W
R981	1-216-097-91	s	METAL, CHIP 100k 5% 1/10W
R982	1-216-121-91	s	METAL, CHIP 1M 5% 1/10W
R984	1-216-049-91	s	METAL, CHIP 1k 5% 1/10W
R985	1-216-663-11	s	METAL, CHIP 3.3k 0.5% 1/10W
R987	1-216-033-00	s	METAL, CHIP 220 5% 1/10W
R988	1-216-295-91	s	RES, CHIP 0

(IO-149/149A BOARD; Suffix -13)

Ref. No. or Q'ty	Part No.	SP	Description
R989	1-216-065-00	s	METAL, CHIP 4.7k 5% 1/10W
R990	1-216-045-00	s	METAL, CHIP 680 5% 1/10W
R991	1-216-667-11	s	METAL, CHIP 4.7k 0.5% 1/10W
R992	1-216-049-91	s	METAL, CHIP 1k 5% 1/10W
R993	1-216-073-00	s	METAL, CHIP 10k 5% 1/10W
R995	1-216-097-91	s	METAL, CHIP 100k 5% 1/10W
R996	1-216-025-91	s	METAL, CHIP 100 5% 1/10W
R997	1-216-117-00	s	METAL, CHIP 680k 5% 1/10W [For NTSC]
R998	1-216-025-91	s	METAL, CHIP 100 5% 1/10W
R999	1-216-295-91	s	RES, CHIP 0 [For NTSC]
R1001	1-216-073-00	s	METAL, CHIP 10k 5% 1/10W
R1002	1-216-073-00	s	METAL, CHIP 10k 5% 1/10W
R1003	1-216-049-91	s	METAL, CHIP 1k 5% 1/10W
R1004	1-216-653-11	s	METAL, CHIP 1.2k 0.5% 1/10W
R1005	1-216-057-00	s	METAL, CHIP 2.2k 5% 1/10W
R1006	1-216-057-00	s	METAL, CHIP 2.2k 5% 1/10W
R1007	1-216-057-00	s	METAL, CHIP 2.2k 5% 1/10W
R1008	1-216-073-00	s	METAL, CHIP 10k 5% 1/10W
R1009	1-216-073-00	s	METAL, CHIP 10k 5% 1/10W
R1010	1-216-049-91	s	METAL, CHIP 1k 5% 1/10W
R1011	1-216-049-91	s	METAL, CHIP 1k 5% 1/10W
R1012	1-216-049-91	s	METAL, CHIP 1k 5% 1/10W
R1013	1-216-049-91	s	METAL, CHIP 1k 5% 1/10W
R1014	1-216-097-91	s	METAL, CHIP 100k 5% 1/10W
R1015	1-216-049-91	s	METAL, CHIP 1k 5% 1/10W
R1016	1-216-646-11	s	METAL, CHIP 620 0.5% 1/10W
R1017	1-216-057-00	s	METAL, CHIP 2.2k 5% 1/10W
R1018	1-216-057-00	s	METAL, CHIP 2.2k 5% 1/10W
R1019	1-216-045-00	s	METAL, CHIP 680 5% 1/10W
R1020	1-216-121-91	s	METAL, CHIP 1M 5% 1/10W
R1021	1-216-025-91	s	METAL, CHIP 100 5% 1/10W
R1022	1-216-065-00	s	METAL, CHIP 4.7k 5% 1/10W
R1023	1-216-049-91	s	METAL, CHIP 1k 5% 1/10W
R1024	1-216-065-00	s	METAL, CHIP 4.7k 5% 1/10W
R1025	1-218-764-11	s	METAL, CHIP 330k 0.5% 1/10W [For PAL]
R1026	1-216-699-11	s	METAL, CHIP 100k 0.5% 1/10W [For NTSC]
R1026	1-218-764-11	s	METAL, CHIP 330k 0.5% 1/10W [For PAL]
R1027	1-216-117-00	s	METAL, CHIP 680k 5% 1/10W
R1028	1-216-073-00	s	METAL, CHIP 10k 5% 1/10W
R1029	1-216-667-11	s	METAL, CHIP 4.7k 0.5% 1/10W
R1030	1-216-089-91	s	METAL, CHIP 47k 5% 1/10W
R1031	1-216-085-00	s	METAL, CHIP 33k 5% 1/10W
R1032	1-216-667-11	s	METAL, CHIP 4.7k 0.5% 1/10W
R1033	1-218-760-11	s	METAL, CHIP 220k 0.5% 1/10W
R1034	1-216-049-91	s	METAL, CHIP 1k 5% 1/10W
R1035	1-216-073-00	s	METAL, CHIP 10k 5% 1/10W
R1036	1-216-085-00	s	METAL, CHIP 33k 5% 1/10W
R1037	1-216-085-00	s	METAL, CHIP 33k 5% 1/10W
R1038	1-216-065-00	s	METAL, CHIP 4.7k 5% 1/10W
R1039	1-216-049-91	s	METAL, CHIP 1k 5% 1/10W
R1040	1-216-049-91	s	METAL, CHIP 1k 5% 1/10W
R1041	1-216-025-91	s	METAL, CHIP 100 5% 1/10W

(IO-149/149A BOARD; Suffix -13)

Ref. No. or Q'ty	Part No.	SP	Description
R1042	1-216-670-11	s	METAL, CHIP 6.2k 0.5% 1/10W
R1043	1-216-634-11	s	METAL, CHIP 200 0.5% 1/10W
R1044	1-216-663-11	s	METAL, CHIP 3.3k 0.5% 1/10W
R1045	1-216-085-00	s	METAL, CHIP 33k 5% 1/10W
R1046	1-216-065-00	s	METAL, CHIP 4.7k 5% 1/10W
R1047	1-216-117-00	s	METAL, CHIP 680k 5% 1/10W
R1048	1-216-658-11	s	METAL, CHIP 2k 0.5% 1/10W
R1049	1-216-653-11	s	METAL, CHIP 1.2k 0.5% 1/10W
R1050	1-216-648-11	s	METAL, CHIP 750 0.5% 1/10W
R1051	1-216-037-00	s	METAL, CHIP 330 5% 1/10W
R1052	1-216-667-11	s	METAL, CHIP 4.7k 0.5% 1/10W
R1053	1-216-671-11	s	METAL, CHIP 6.8k 0.5% 1/10W
R1054	1-216-686-11	s	METAL, CHIP 30k 0.5% 1/10W
R1055	1-216-049-91	s	METAL, CHIP 1k 5% 1/10W
R1056	1-216-041-00	s	METAL, CHIP 470 5% 1/10W
R1057	1-216-049-91	s	METAL, CHIP 1k 5% 1/10W
R1058	1-216-133-00	s	METAL, CHIP 3.3M 5% 1/10W
R1059	1-216-675-11	s	METAL, CHIP 10k 0.5% 1/10W
R1060	1-216-675-11	s	METAL, CHIP 10k 0.5% 1/10W
R1061	1-216-025-91	s	METAL, CHIP 100 5% 1/10W
R1062	1-216-049-91	s	METAL, CHIP 1k 5% 1/10W
R1064	1-216-651-11	s	METAL, CHIP 1k 0.5% 1/10W
R1065	1-216-665-11	s	METAL, CHIP 3.9k 0.5% 1/10W
R1066	1-216-073-00	s	METAL, CHIP 10k 5% 1/10W
R1067	1-216-049-91	s	METAL, CHIP 1k 5% 1/10W
R1068	1-216-073-00	s	METAL, CHIP 10k 5% 1/10W
R1069	1-216-049-91	s	METAL, CHIP 1k 5% 1/10W
R1070	1-216-635-11	s	METAL, CHIP 220 0.5% 1/10W
R1071	1-216-639-11	s	METAL, CHIP 330 0.5% 1/10W
R1072	1-216-295-91	s	RES, CHIP 0 [For PAL]
R1073	1-216-295-91	s	RES, CHIP 0
R1075	1-216-059-00	s	METAL, CHIP 2.7k 5% 1/10W
R1076	1-216-097-91	s	METAL, CHIP 100k 5% 1/10W
R1077	1-216-295-91	s	RES, CHIP 0 [For PAL]
R1078	1-216-295-91	s	RES, CHIP 0 [For PAL]
R1079	1-216-097-91	s	METAL, CHIP 100k 5% 1/10W
R1080	1-216-025-91	s	METAL, CHIP 100 5% 1/10W
R1081	1-216-073-00	s	METAL, CHIP 10k 5% 1/10W
R1083	1-216-049-91	s	METAL, CHIP 1k 5% 1/10W
R1084	1-216-059-00	s	METAL, CHIP 2.7k 5% 1/10W
R1085	1-216-025-91	s	METAL, CHIP 100 5% 1/10W
R1086	1-216-117-00	s	METAL, CHIP 680k 5% 1/10W
R1087	1-216-696-11	s	METAL, CHIP 75k 0.5% 1/10W
R1088	1-216-074-00	s	METAL, CHIP 11k 10% 1/10W
R1089	1-216-651-11	s	METAL, CHIP 1k 0.5% 1/10W
R1090	1-216-651-11	s	METAL, CHIP 1k 0.5% 1/10W
R1091	1-216-655-11	s	METAL, CHIP 1.5k 0.5% 1/10W [For NTSC]
R1091	1-216-653-11	s	METAL, CHIP 1.2k 0.5% 1/10W [For PAL]
R1092	1-216-655-11	s	METAL, CHIP 1.5k 0.5% 1/10W [For NTSC]
R1092	1-216-653-11	s	METAL, CHIP 1.2k 0.5% 1/10W [For PAL]

(IO-149/149A BOARD; Suffix -13)

Ref. No. or Q'ty	Part No.	SP	Description	
R1093	1-216-061-00	s	METAL, CHIP 3.3k 5% 1/10W	
R1094	1-216-663-11	s	METAL, CHIP 3.3k 0.5% 1/10W	
R1095	1-216-049-91	s	METAL, CHIP 1k 5% 1/10W	
R1097	1-216-025-91	s	METAL, CHIP 100 5% 1/10W	
R1098	1-216-683-11	s	METAL, CHIP 22k 0.5% 1/10W	
R1099	1-216-683-11	s	METAL, CHIP 22k 0.5% 1/10W	
R1100	1-216-081-00	s	METAL, CHIP 22k 5% 1/10W	
R1101	1-216-113-00	s	METAL, CHIP 470k 5% 1/10W	
R1102	1-216-677-11	s	METAL, CHIP 12k 0.5% 1/10W	
R1103	1-216-073-00	s	METAL, CHIP 10k 5% 1/10W	
R1104	1-216-113-00	s	METAL, CHIP 470k 5% 1/10W	
R1105	1-216-103-00	s	METAL, CHIP 180k 5% 1/10W	
R1106	1-216-073-00	s	METAL, CHIP 10k 5% 1/10W	
R1108	1-208-790-11	s	METAL, CHIP 2.2k 0.5% 1/10W	
R1109	1-216-645-11	s	METAL, CHIP 560 0.5% 1/10W	
R1110	1-216-117-00	s	METAL, CHIP 680k 5% 1/10W	
R1111	1-216-081-00	s	METAL, CHIP 22k 5% 1/10W	
R1112	1-216-081-00	s	METAL, CHIP 22k 5% 1/10W	
R1113	1-216-097-91	s	METAL, CHIP 100k 5% 1/10W	
RB101	1-239-999-11	s	RESISTOR BLOCK, CHIP 1k x 4	
RB102	1-239-998-11	s	RESISTOR BLOCK, CHIP 100 x 4	
RB103	1-233-237-11	s	RESISTOR BLOCK, CHIP 100k x 4	
RB201	1-233-235-11	s	RESISTOR BLOCK, CHIP 10k x 4	
RB202	1-233-235-11	s	RESISTOR BLOCK, CHIP 10k x 4	
RB701	1-233-234-11	s	RESISTOR BLOCK, CHIP 2.2k x 4	
RB1000	1-233-237-11	s	RESISTOR BLOCK, CHIP 100k x 4	
RB1001	1-239-999-11	s	RESISTOR BLOCK, CHIP 1k x 4	
RV101	1-237-034-11	s	RES, ADJ METAL 2k	
RV102	1-237-034-11	s	RES, ADJ METAL 2k	
RV103	1-237-034-11	s	RES, ADJ METAL 2k	
RV104	1-237-034-11	s	RES, ADJ METAL 2k	[For NTSC]
RV105	1-237-035-11	s	RES, ADJ METAL 5k	
RV106	1-237-035-11	s	RES, ADJ METAL 5k	
RV107	1-237-036-11	s	RES, ADJ METAL 10k	
RV108	1-237-036-11	s	RES, ADJ METAL 10k	
RV109	1-237-036-11	s	RES, ADJ METAL 10k	
RV110	1-237-035-11	s	RES, ADJ METAL 5k	
RV111	1-237-035-11	s	RES, ADJ METAL 5k	
RV112	1-237-034-11	s	RES, ADJ METAL 2k	
RV301	1-237-033-11	s	RES, ADJ METAL 1k	
RV302	1-237-034-11	s	RES, ADJ METAL 2k	
RV303	1-237-032-11	s	RES, ADJ METAL 500	
RV304	1-237-033-11	s	RES, ADJ METAL 1k	
RV305	1-237-035-11	s	RES, ADJ METAL 5k	
RV306	1-237-033-11	s	RES, ADJ METAL 1k	
RV307	1-237-033-11	s	RES, ADJ METAL 1k	
RV308	1-237-032-11	s	RES, ADJ METAL 500	
RV309	1-237-034-11	s	RES, ADJ METAL 2k	
RV310	1-237-034-11	s	RES, ADJ METAL 2k	
RV311	1-237-032-11	s	RES, ADJ METAL 500	
RV312	1-237-035-11	s	RES, ADJ METAL 5k	
RV313	1-237-035-11	s	RES, ADJ METAL 5k	
RV314	1-237-032-11	s	RES, ADJ METAL 500	
RV315	1-237-032-11	s	RES, ADJ METAL 500	
RV316	1-237-033-11	s	RES, ADJ METAL 1k	
RV317	1-237-033-11	s	RES, ADJ METAL 1k	
RV318	1-237-030-11	s	RES, ADJ METAL 100	
RV319	1-237-030-11	s	RES, ADJ METAL 100	

(IO-149/149A BOARD; Suffix -13)

Ref. No. or Q'ty	Part No.	SP	Description	
RV501	1-237-035-11	s	RES, ADJ METAL 5k	
RV502	1-237-036-11	s	RES, ADJ METAL 10k	
RV503	1-237-037-11	s	RES, ADJ METAL 20k	
RV504	1-237-036-11	s	RES, ADJ METAL 10k	
RV505	1-237-034-11	s	RES, ADJ METAL 2k	
RV506	1-237-033-11	s	RES, ADJ METAL 1k	
RV601	1-237-035-11	s	RES, ADJ METAL 5k	
RV701	1-237-033-11	s	RES, ADJ METAL 1k	
RV702	1-237-033-11	s	RES, ADJ METAL 1k	
RV703	1-237-032-11	s	RES, ADJ METAL 500	
RV704	1-237-031-11	s	RES, ADJ METAL 200	
RV901	1-237-034-11	s	RES, ADJ METAL 2k	
RV902	1-237-035-11	s	RES, ADJ METAL 5k	
RV903	1-237-036-11	s	RES, ADJ METAL 10k	
RV904	1-237-031-11	s	RES, ADJ METAL 200	
RV905	1-237-034-11	s	RES, ADJ METAL 2k	
RV906	1-237-034-11	s	RES, ADJ METAL 2k	
RV907	1-237-034-11	s	RES, ADJ METAL 2k	
RV908	1-237-034-11	s	RES, ADJ METAL 2k	
RV909	1-237-034-11	s	RES, ADJ METAL 2k	
RV910	1-237-034-11	s	RES, ADJ METAL 2k	
RV911	1-237-034-11	s	RES, ADJ METAL 2k	
RV912	1-237-034-11	s	RES, ADJ METAL 2k	
RV913	1-237-031-11	s	RES, ADJ METAL 200	
RV914	1-237-031-11	s	RES, ADJ METAL 200	
RV915	1-237-033-11	s	RES, ADJ METAL 1k	
RV1001	1-237-034-11	s	RES, ADJ METAL 2k	
RV1002	1-237-034-11	s	RES, ADJ METAL 2k	
RV1003	1-237-034-11	s	RES, ADJ METAL 2k	
RV1004	1-237-034-11	s	RES, ADJ METAL 2k	
S901	1-571-275-31	s	SWITCH, SLIDE	
TH101	1-809-352-11	s	THERMISTOR, CHIP 1.5k	
TH901	1-809-352-11	s	THERMISTOR, CHIP 1.5k	[For NTSC]
X101	1-767-260-11	s	CRYSTAL 13.50MHz	
X102	1-767-260-11	s	CRYSTAL 13.50MHz	
X103	1-767-260-11	s	CRYSTAL 13.50MHz	
X601	1-767-262-11	s	CRYSTAL 27.00MHz	
X602	1-527-722-00	s	CRYSTAL 14.31818MHz	[For NTSC]
X602	1-760-457-11	s	CRYSTAL 17.7345MHz	[For PAL]
X1001	1-760-109-21	s	CRYSTAL 10.738635MHz	[For NTSC]
X1001	1-760-183-21	s	CRYSTAL 10.664135MHz	[For PAL]
X1002	1-527-722-00	s	CRYSTAL 14.31818MHz	[For NTSC]
X1002	1-760-457-11	s	CRYSTAL 17.7345MHz	[For PAL]

IO-149/149A BOARD; Suffix -11, 12

Ref. No. or Q'ty	Part No.	SP	Description

This list corresponds to the board suffix numbers -11 and -12.

1pc	A-8315-283-A	o	MOUNTED CIRCUIT BOARD, IO-149 [for NTSC]
1pc	A-8315-293-A	o	MOUNTED CIRCUIT BOARD, IO-149A [for PAL]

The IO-149 board with board suffix numbers -11 and -12 includes the DUS-101 board.
See the list in the DUS-101 board for details.

Ref. No. or Q'ty	Part No.	SP	Description
1pc	7-621-759-45	s	+PSW, 2.6x6
1pc	3-179-085-01	s	LEVER (L), PRINTED CIRCUIT BOARD
1pc	3-179-084-01	s	LEVER (R), PRINTED CIRCUIT BOARD
C1	1-126-392-11	s	ELECT, CHIP 100uF 20% 6.3V
C2	1-163-038-91	s	CERAMIC, CHIP 0.1uF 25V
C3	1-126-392-11	s	ELECT, CHIP 100uF 20% 6.3V
C4	1-163-038-91	s	CERAMIC, CHIP 0.1uF 25V
C5	1-126-392-11	s	ELECT, CHIP 100uF 20% 6.3V
C6	1-163-038-91	s	CERAMIC, CHIP 0.1uF 25V
C11	1-126-396-11	s	ELECT, CHIP 47uF 20% 16V
C12	1-163-038-91	s	CERAMIC, CHIP 0.1uF 25V
C13	1-126-396-11	s	ELECT, CHIP 47uF 20% 16V
C14	1-163-038-91	s	CERAMIC, CHIP 0.1uF 25V
C15	1-126-396-11	s	ELECT, CHIP 47uF 20% 16V
C16	1-163-038-91	s	CERAMIC, CHIP 0.1uF 25V
C21	1-126-396-11	s	ELECT, CHIP 47uF 20% 16V
C22	1-163-038-91	s	CERAMIC, CHIP 0.1uF 25V
C23	1-126-396-11	s	ELECT, CHIP 47uF 20% 16V
C24	1-163-038-91	s	CERAMIC, CHIP 0.1uF 25V
C25	1-126-396-11	s	ELECT, CHIP 47uF 20% 16V
C26	1-163-038-91	s	CERAMIC, CHIP 0.1uF 25V
C31	1-126-396-11	s	ELECT, CHIP 47uF 20% 16V
C32	1-163-038-91	s	CERAMIC, CHIP 0.1uF 25V
C33	1-126-396-11	s	ELECT, CHIP 47uF 20% 16V
C34	1-163-038-91	s	CERAMIC, CHIP 0.1uF 25V
C35	1-126-396-11	s	ELECT, CHIP 47uF 20% 16V
C36	1-163-038-91	s	CERAMIC, CHIP 0.1uF 25V
C37	1-126-396-11	s	ELECT, CHIP 47uF 20% 16V
C38	1-163-038-91	s	CERAMIC, CHIP 0.1uF 25V
C39	1-126-396-11	s	ELECT, CHIP 47uF 20% 16V
C40	1-163-038-91	s	CERAMIC, CHIP 0.1uF 25V
C101	1-164-004-11	s	CERAMIC, CHIP 0.1uF 10% 25V
C102	1-163-037-11	s	CERAMIC, CHIP 0.022uF 10% 25V
C103	1-126-396-11	s	ELECT, CHIP 47uF 20% 16V
C104	1-163-037-11	s	CERAMIC, CHIP 0.022uF 10% 25V
C105	1-163-037-11	s	CERAMIC, CHIP 0.022uF 10% 25V
C106	1-163-037-11	s	CERAMIC, CHIP 0.022uF 10% 25V
C107	1-163-037-11	s	CERAMIC, CHIP 0.022uF 10% 25V
C108	1-163-235-11	s	CERAMIC, CHIP 22pF 5% 50V
C109	1-163-037-11	s	CERAMIC, CHIP 0.022uF 10% 25V
C110	1-164-004-11	s	CERAMIC, CHIP 0.1uF 10% 25V
C111	1-164-004-11	s	CERAMIC, CHIP 0.1uF 10% 25V
C112	1-163-275-11	s	CERAMIC, CHIP 0.001uF 5% 50V
C113	1-163-275-11	s	CERAMIC, CHIP 0.001uF 5% 50V

(IO-149/149A BOARD; Suffix -11, 12)

Ref. No. or Q'ty	Part No.	SP	Description
C114	1-164-004-11	s	CERAMIC, CHIP 0.1uF 10% 25V
C115	1-164-004-11	s	CERAMIC, CHIP 0.1uF 10% 25V
C116	1-163-275-11	s	CERAMIC, CHIP 0.001uF 5% 50V
C117	1-163-275-11	s	CERAMIC, CHIP 0.001uF 5% 50V
C118	1-163-237-11	s	CERAMIC, CHIP 27pF 5% 50V
C119	1-163-237-11	s	CERAMIC, CHIP 27pF 5% 50V
C120	1-163-037-11	s	CERAMIC, CHIP 0.022uF 10% 25V
C121	1-163-037-11	s	CERAMIC, CHIP 0.022uF 10% 25V
C122	1-163-037-11	s	CERAMIC, CHIP 0.022uF 10% 25V
C123	1-164-004-11	s	CERAMIC, CHIP 0.1uF 10% 25V
C124	1-163-037-11	s	CERAMIC, CHIP 0.022uF 10% 25V
C125	1-126-392-11	s	ELECT, CHIP 100uF 20% 6.3V
C126	1-163-275-11	s	CERAMIC, CHIP 0.001uF 5% 50V
C127	1-164-004-11	s	CERAMIC, CHIP 0.1uF 10% 25V
C128	1-163-037-11	s	CERAMIC, CHIP 0.022uF 10% 25V
C129	1-163-037-11	s	CERAMIC, CHIP 0.022uF 10% 25V
C130	1-163-275-11	s	CERAMIC, CHIP 0.001uF 5% 50V
C131	1-163-037-11	s	CERAMIC, CHIP 0.022uF 10% 25V
C132	1-163-037-11	s	CERAMIC, CHIP 0.022uF 10% 25V
C133	1-163-237-11	s	CERAMIC, CHIP 27pF 5% 50V
C134	1-126-394-11	s	ELECT, CHIP 10uF 20% 16V
C135	1-126-394-11	s	ELECT, CHIP 10uF 20% 16V
C136	1-163-037-11	s	CERAMIC, CHIP 0.022uF 10% 25V
C137	1-163-037-11	s	CERAMIC, CHIP 0.022uF 10% 25V
C138	1-163-037-11	s	CERAMIC, CHIP 0.022uF 10% 25V
C139	1-163-037-11	s	CERAMIC, CHIP 0.022uF 10% 25V
C140	1-163-037-11	s	CERAMIC, CHIP 0.022uF 10% 25V
C141	1-163-037-11	s	CERAMIC, CHIP 0.022uF 10% 25V
C142	1-126-392-11	s	ELECT, CHIP 100uF 20% 6.3V
C143	1-126-392-11	s	ELECT, CHIP 100uF 20% 6.3V
C144	1-163-037-11	s	CERAMIC, CHIP 0.022uF 10% 25V
C145	1-163-037-11	s	CERAMIC, CHIP 0.022uF 10% 25V
C146	1-163-037-11	s	CERAMIC, CHIP 0.022uF 10% 25V
C147	1-163-037-11	s	CERAMIC, CHIP 0.022uF 10% 25V
C148	1-163-037-11	s	CERAMIC, CHIP 0.022uF 10% 25V
C149	1-163-037-11	s	CERAMIC, CHIP 0.022uF 10% 25V
C150	1-163-037-11	s	CERAMIC, CHIP 0.022uF 10% 25V
C151	1-163-037-11	s	CERAMIC, CHIP 0.022uF 10% 25V
C152	1-163-037-11	s	CERAMIC, CHIP 0.022uF 10% 25V
C153	1-126-391-11	s	ELECT, CHIP 47uF 20% 6.3V
C154	1-163-231-11	s	CERAMIC, CHIP 15pF 5% 50V
C155	1-163-037-11	s	CERAMIC, CHIP 0.022uF 10% 25V
C156	1-163-038-91	s	CERAMIC, CHIP 0.1uF 25V
C157	1-163-037-11	s	CERAMIC, CHIP 0.022uF 10% 25V
C158	1-163-037-11	s	CERAMIC, CHIP 0.022uF 10% 25V
C159	1-163-038-91	s	CERAMIC, CHIP 0.1uF 25V
C160	1-163-037-11	s	CERAMIC, CHIP 0.022uF 10% 25V
C161	1-163-037-11	s	CERAMIC, CHIP 0.022uF 10% 25V
C162	1-163-038-91	s	CERAMIC, CHIP 0.1uF 25V
C163	1-163-038-91	s	CERAMIC, CHIP 0.1uF 25V
C164	1-163-038-91	s	CERAMIC, CHIP 0.1uF 25V
C165	1-126-391-11	s	ELECT, CHIP 47uF 20% 6.3V
C166	1-163-037-11	s	CERAMIC, CHIP 0.022uF 10% 25V
C167	1-126-391-11	s	ELECT, CHIP 47uF 20% 6.3V
C168	1-163-037-11	s	CERAMIC, CHIP 0.022uF 10% 25V
C169	1-163-037-11	s	CERAMIC, CHIP 0.022uF 10% 25V
C170	1-163-037-11	s	CERAMIC, CHIP 0.022uF 10% 25V
C171	1-126-391-11	s	ELECT, CHIP 47uF 20% 6.3V
C172	1-126-396-11	s	ELECT, CHIP 47uF 20% 16V

(IO-149/149A BOARD; Suffix -11, 12)

Ref. No. or Q'ty	Part No.	SP	Description
C173	1-126-396-11	s	ELECT, CHIP 47uF 20% 16V
C174	1-126-391-11	s	ELECT, CHIP 47uF 20% 6.3V
C175	1-126-391-11	s	ELECT, CHIP 47uF 20% 6.3V
C176	1-126-391-11	s	ELECT, CHIP 47uF 20% 6.3V
C177	1-126-391-11	s	ELECT, CHIP 47uF 20% 6.3V
C178	1-126-391-11	s	ELECT, CHIP 47uF 20% 6.3V
C179	1-163-037-11	s	CERAMIC, CHIP 0.022uF 10% 25V
C180	1-163-037-11	s	CERAMIC, CHIP 0.022uF 10% 25V
C181	1-163-037-11	s	CERAMIC, CHIP 0.022uF 10% 25V
C182	1-163-037-11	s	CERAMIC, CHIP 0.022uF 10% 25V
C183	1-163-037-11	s	CERAMIC, CHIP 0.022uF 10% 25V
C184	1-163-037-11	s	CERAMIC, CHIP 0.022uF 10% 25V
C185	1-163-037-11	s	CERAMIC, CHIP 0.022uF 10% 25V
C186	1-163-037-11	s	CERAMIC, CHIP 0.022uF 10% 25V
C187	1-163-037-11	s	CERAMIC, CHIP 0.022uF 10% 25V
C188	1-163-235-11	s	CERAMIC, CHIP 22pF 5% 50V[For NTSC]
C189	1-163-235-11	s	CERAMIC, CHIP 22pF 5% 50V[For NTSC]
C190	1-163-231-11	s	CERAMIC, CHIP 15pF 5% 50V
C191	1-163-037-11	s	CERAMIC, CHIP 0.022uF 10% 25V
C192	1-163-037-11	s	CERAMIC, CHIP 0.022uF 10% 25V
C193	1-163-037-11	s	CERAMIC, CHIP 0.022uF 10% 25V
C194	1-126-401-11	s	ELECT, CHIP 1uF 20% 50V
C195	1-126-401-11	s	ELECT, CHIP 1uF 20% 50V
C196	1-126-394-11	s	ELECT, CHIP 10uF 20% 16V
C197	1-126-401-11	s	ELECT, CHIP 1uF 20% 50V
C198	1-126-394-11	s	ELECT, CHIP 10uF 20% 16V
C199	1-163-038-91	s	CERAMIC, CHIP 0.1uF 25V
C200	1-126-401-11	s	ELECT, CHIP 1uF 20% 50V
C201	1-163-038-91	s	CERAMIC, CHIP 0.1uF 25V
C202	1-163-809-11	s	CERAMIC, CHIP 0.047uF 10% 25V
C203	1-163-809-11	s	CERAMIC, CHIP 0.047uF 10% 25V
C204	1-163-809-11	s	CERAMIC, CHIP 0.047uF 10% 25V
C205	1-163-227-11	s	CERAMIC, CHIP 10pF 5% 50V
C206	1-163-037-11	s	CERAMIC, CHIP 0.022uF 10% 25V
C207	1-163-037-11	s	CERAMIC, CHIP 0.022uF 10% 25V
C208	1-163-037-11	s	CERAMIC, CHIP 0.022uF 10% 25V
C209	1-163-037-11	s	CERAMIC, CHIP 0.022uF 10% 25V
C210	1-163-037-11	s	CERAMIC, CHIP 0.022uF 10% 25V
C211	1-126-396-11	s	ELECT, CHIP 47uF 20% 16V
C212	1-163-037-11	s	CERAMIC, CHIP 0.022uF 10% 25V
C213	1-163-227-11	s	CERAMIC, CHIP 10pF 5% 50V
C214	1-163-037-11	s	CERAMIC, CHIP 0.022uF 10% 25V
C215	1-126-396-11	s	ELECT, CHIP 47uF 20% 16V
C216	1-163-037-11	s	CERAMIC, CHIP 0.022uF 10% 25V
C217	1-126-390-11	s	ELECT, CHIP 22uF 20% 6.3V
C218	1-163-037-11	s	CERAMIC, CHIP 0.022uF 10% 25V
C219	1-163-037-11	s	CERAMIC, CHIP 0.022uF 10% 25V
C220	1-163-249-11	s	CERAMIC, CHIP 82pF 5% 50V[For NTSC]
C220	1-163-251-11	s	CERAMIC, CHIP 100pF 5% 50V[For PAL]
C221	1-163-243-11	s	CERAMIC, CHIP 47pF 5% 50V
C222	1-163-227-11	s	CERAMIC, CHIP 10pF 5% 50V
C223	1-163-118-00	s	CERAMIC, CHIP 110pF 5% 50V [For NTSC]
C223	1-163-121-00	s	CERAMIC, CHIP 150pF 5% 50V[For PAL]
C224	1-163-037-11	s	CERAMIC, CHIP 0.022uF 10% 25V
C225	1-163-224-11	s	CERAMIC, CHIP 7pF 50V [For NTSC]
C225	1-163-087-00	s	CERAMIC, CHIP 4pF 50V [For PAL]
C226	1-163-037-11	s	CERAMIC, CHIP 0.022uF 10% 25V

(IO-149/149A BOARD; Suffix -11, 12)

Ref. No. or Q'ty	Part No.	SP	Description
C227	1-163-227-11	s	CERAMIC, CHIP 10pF 5% 50V [For PAL]
C228	1-163-231-11	s	CERAMIC, CHIP 15pF 5% 50V
C229	1-163-259-91	s	CERAMIC, CHIP 220pF 5% 50V
C230	1-126-390-11	s	ELECT, CHIP 22uF 20% 6.3V
C231	1-163-037-11	s	CERAMIC, CHIP 0.022uF 10% 25V
C232	1-163-037-11	s	CERAMIC, CHIP 0.022uF 10% 25V
C233	1-163-037-11	s	CERAMIC, CHIP 0.022uF 10% 25V
C234	1-163-037-11	s	CERAMIC, CHIP 0.022uF 10% 25V
C235	1-163-227-11	s	CERAMIC, CHIP 10pF 5% 50V
C301	1-126-391-11	s	ELECT, CHIP 47uF 20% 6.3V
C302	1-126-391-11	s	ELECT, CHIP 47uF 20% 6.3V
C303	1-163-038-91	s	CERAMIC, CHIP 0.1uF 25V
C304	1-126-391-11	s	ELECT, CHIP 47uF 20% 6.3V
C305	1-126-391-11	s	ELECT, CHIP 47uF 20% 6.3V
C306	1-163-038-91	s	CERAMIC, CHIP 0.1uF 25V
C307	1-163-038-91	s	CERAMIC, CHIP 0.1uF 25V
C308	1-163-038-91	s	CERAMIC, CHIP 0.1uF 25V
C309	1-163-231-11	s	CERAMIC, CHIP 15pF 5% 50V
C310	1-163-037-11	s	CERAMIC, CHIP 0.022uF 10% 25V
C311	1-163-120-00	s	CERAMIC, CHIP 130pF 5% 50V [For NTSC]
C311	1-163-259-91	s	CERAMIC, CHIP 220pF 5% 50V[For PAL]
C312	1-163-037-11	s	CERAMIC, CHIP 0.022uF 10% 25V
C313	1-163-038-91	s	CERAMIC, CHIP 0.1uF 25V
C314	1-163-038-91	s	CERAMIC, CHIP 0.1uF 25V
C315	1-163-037-11	s	CERAMIC, CHIP 0.022uF 10% 25V
C316	1-163-037-11	s	CERAMIC, CHIP 0.022uF 10% 25V
C317	1-163-037-11	s	CERAMIC, CHIP 0.022uF 10% 25V
C318	1-163-231-11	s	CERAMIC, CHIP 15pF 5% 50V
C319	1-163-120-00	s	CERAMIC, CHIP 130pF 5% 50V [For NTSC]
C319	1-163-259-91	s	CERAMIC, CHIP 220pF 5% 50V[For PAL]
C320	1-163-037-11	s	CERAMIC, CHIP 0.022uF 10% 25V
C321	1-126-391-11	s	ELECT, CHIP 47uF 20% 6.3V
C324	1-163-038-91	s	CERAMIC, CHIP 0.1uF 25V
C326	1-126-396-11	s	ELECT, CHIP 47uF 20% 16V
C327	1-126-391-11	s	ELECT, CHIP 47uF 20% 6.3V
C328	1-163-037-11	s	CERAMIC, CHIP 0.022uF 10% 25V
C329	1-126-396-11	s	ELECT, CHIP 47uF 20% 16V
C330	1-163-037-11	s	CERAMIC, CHIP 0.022uF 10% 25V
C331	1-126-396-11	s	ELECT, CHIP 47uF 20% 16V
C332	1-163-038-91	s	CERAMIC, CHIP 0.1uF 25V
C333	1-163-038-91	s	CERAMIC, CHIP 0.1uF 25V
C334	1-163-224-11	s	CERAMIC, CHIP 7pF 50V [For NTSC]
C334	1-163-222-11	s	CERAMIC, CHIP 5pF 50V [For PAL]
C335	1-163-231-11	s	CERAMIC, CHIP 15pF 5% 50V
C336	1-163-037-11	s	CERAMIC, CHIP 0.022uF 10% 25V
C337	1-163-231-11	s	CERAMIC, CHIP 15pF 5% 50V
C338	1-163-038-91	s	CERAMIC, CHIP 0.1uF 25V
C339	1-163-243-11	s	CERAMIC, CHIP 47pF 5% 50V
C340	1-163-243-11	s	CERAMIC, CHIP 47pF 5% 50V
C341	1-163-239-11	s	CERAMIC, CHIP 33pF 5% 50V
C342	1-163-239-11	s	CERAMIC, CHIP 33pF 5% 50V
C343	1-126-392-11	s	ELECT, CHIP 100uF 20% 6.3V
C344	1-163-235-11	s	CERAMIC, CHIP 22pF 5% 50V[For NTSC]
C344	1-163-237-11	s	CERAMIC, CHIP 27pF 5% 50V [For PAL]
C345	1-163-235-11	s	CERAMIC, CHIP 22pF 5% 50V[For NTSC]

(IO-149/149A BOARD; Suffix -11, 12)

Ref. No. or Q'ty	Part No.	SP	Description
C345	1-163-237-11	s	CERAMIC, CHIP 27pF 5% 50V [For PAL]
C346	1-126-394-11	s	ELECT, CHIP 10uF 20% 16V
C347	1-126-394-11	s	ELECT, CHIP 10uF 20% 16V
C348	1-126-391-11	s	ELECT, CHIP 47uF 20% 6.3V
C349	1-163-809-11	s	CERAMIC, CHIP 0.047uF 10% 25V
C350	1-126-391-11	s	ELECT, CHIP 47uF 20% 6.3V
C351	1-163-038-91	s	CERAMIC, CHIP 0.1uF 25V
C352	1-163-037-11	s	CERAMIC, CHIP 0.022uF 10% 25V
C353	1-163-037-11	s	CERAMIC, CHIP 0.022uF 10% 25V
C354	1-163-038-91	s	CERAMIC, CHIP 0.1uF 25V
C355	1-163-227-11	s	CERAMIC, CHIP 10pF 5% 50V
C356	1-163-037-11	s	CERAMIC, CHIP 0.022uF 10% 25V
C357	1-163-037-11	s	CERAMIC, CHIP 0.022uF 10% 25V
C358	1-163-037-11	s	CERAMIC, CHIP 0.022uF 10% 25V
C359	1-163-038-91	s	CERAMIC, CHIP 0.1uF 25V
C360	1-163-038-91	s	CERAMIC, CHIP 0.1uF 25V
C361	1-163-038-91	s	CERAMIC, CHIP 0.1uF 25V
C362	1-163-243-11	s	CERAMIC, CHIP 47pF 5% 50V[For NTSC]
C362	1-163-237-11	s	CERAMIC, CHIP 27pF 5% 50V [For PAL]
C363	1-163-037-11	s	CERAMIC, CHIP 0.022uF 10% 25V
C364	1-163-037-11	s	CERAMIC, CHIP 0.022uF 10% 25V
C365	1-163-222-11	s	CERAMIC, CHIP 5pF 50V
C366	1-163-037-11	s	CERAMIC, CHIP 0.022uF 10% 25V
C367	1-163-243-11	s	CERAMIC, CHIP 47pF 5% 50V
C368	1-163-037-11	s	CERAMIC, CHIP 0.022uF 10% 25V
C369	1-163-037-11	s	CERAMIC, CHIP 0.022uF 10% 25V
C370	1-163-037-11	s	CERAMIC, CHIP 0.022uF 10% 25V
C371	1-163-037-11	s	CERAMIC, CHIP 0.022uF 10% 25V
C372	1-163-037-11	s	CERAMIC, CHIP 0.022uF 10% 25V
C373	1-126-391-11	s	ELECT, CHIP 47uF 20% 6.3V
C374	1-163-037-11	s	CERAMIC, CHIP 0.022uF 10% 25V
C375	1-163-037-11	s	CERAMIC, CHIP 0.022uF 10% 25V
C376	1-163-037-11	s	CERAMIC, CHIP 0.022uF 10% 25V
C377	1-126-391-11	s	ELECT, CHIP 47uF 20% 6.3V
C378	1-126-396-11	s	ELECT, CHIP 47uF 20% 16V
C379	1-163-037-11	s	CERAMIC, CHIP 0.022uF 10% 25V
C380	1-163-037-11	s	CERAMIC, CHIP 0.022uF 10% 25V
C381	1-163-227-11	s	CERAMIC, CHIP 10pF 5% 50V
C382	1-163-037-11	s	CERAMIC, CHIP 0.022uF 10% 25V
C383	1-163-227-11	s	CERAMIC, CHIP 10pF 5% 50V
C384	1-163-037-11	s	CERAMIC, CHIP 0.022uF 10% 25V
C385	1-163-038-91	s	CERAMIC, CHIP 0.1uF 25V
C386	1-163-038-91	s	CERAMIC, CHIP 0.1uF 25V
C387	1-163-037-11	s	CERAMIC, CHIP 0.022uF 10% 25V
C388	1-163-245-11	s	CERAMIC, CHIP 56pF 5% 50V
C501	1-163-235-11	s	CERAMIC, CHIP 22pF 5% 50V[For NTSC]
C501	1-163-239-11	s	CERAMIC, CHIP 33pF 5% 50V [For PAL]
C502	1-163-038-91	s	CERAMIC, CHIP 0.1uF 25V
C503	1-126-394-11	s	ELECT, CHIP 10uF 20% 16V
C504	1-126-394-11	s	ELECT, CHIP 10uF 20% 16V
C505	1-126-394-11	s	ELECT, CHIP 10uF 20% 16V
C506	1-163-037-11	s	CERAMIC, CHIP 0.022uF 10% 25V
C507	1-126-396-11	s	ELECT, CHIP 47uF 20% 16V
C508	1-126-396-11	s	ELECT, CHIP 47uF 20% 16V
C509	1-126-394-11	s	ELECT, CHIP 10uF 20% 16V
C510	1-126-394-11	s	ELECT, CHIP 10uF 20% 16V
C511	1-126-401-11	s	ELECT, CHIP 1uF 20% 50V
C512	1-163-235-11	s	CERAMIC, CHIP 22pF 5% 50V
C513	1-164-222-11	s	CERAMIC, CHIP 0.22uF 25V

(IO-149/149A BOARD; Suffix -11, 12)

Ref. No. or Q'ty	Part No.	SP	Description
C514	1-163-038-91	s	CERAMIC, CHIP 0.1uF 25V
C515	1-163-038-91	s	CERAMIC, CHIP 0.1uF 25V
C516	1-163-121-00	s	CERAMIC, CHIP 150pF 5% 50V [For NTSC]
C516	1-163-259-91	s	CERAMIC, CHIP 220pF 5% 50V[For PAL]
C517	1-164-232-11	s	CERAMIC, CHIP 0.01uF 10% 100V
C518	1-163-037-11	s	CERAMIC, CHIP 0.022uF 10% 25V
C519	1-163-038-91	s	CERAMIC, CHIP 0.1uF 25V
C520	1-163-038-91	s	CERAMIC, CHIP 0.1uF 25V
C521	1-126-396-11	s	ELECT, CHIP 47uF 20% 16V
C522	1-126-393-11	s	ELECT, CHIP 33uF 20% 10V
C523	1-163-038-91	s	CERAMIC, CHIP 0.1uF 25V
C524	1-163-239-11	s	CERAMIC, CHIP 33pF 5% 50V
C525	1-163-259-91	s	CERAMIC, CHIP 220pF 5% 50V
C526	1-163-038-91	s	CERAMIC, CHIP 0.1uF 25V
C527	1-163-037-11	s	CERAMIC, CHIP 0.022uF 10% 25V
C528	1-163-038-91	s	CERAMIC, CHIP 0.1uF 25V
C529	1-163-037-11	s	CERAMIC, CHIP 0.022uF 10% 25V
C530	1-163-038-91	s	CERAMIC, CHIP 0.1uF 25V
C531	1-163-038-91	s	CERAMIC, CHIP 0.1uF 25V
C532	1-163-038-91	s	CERAMIC, CHIP 0.1uF 25V
C533	1-163-038-91	s	CERAMIC, CHIP 0.1uF 25V
C534	1-126-391-11	s	ELECT, CHIP 47uF 20% 6.3V
C535	1-163-038-91	s	CERAMIC, CHIP 0.1uF 25V
C536	1-163-038-91	s	CERAMIC, CHIP 0.1uF 25V
C537	1-163-989-11	s	CERAMIC, CHIP 0.033uF 10% 25V
C538	1-163-121-00	s	CERAMIC, CHIP 150pF 5% 50V
C539	1-163-038-91	s	CERAMIC, CHIP 0.1uF 25V
C540	1-163-038-91	s	CERAMIC, CHIP 0.1uF 25V
C541	1-163-038-91	s	CERAMIC, CHIP 0.1uF 25V
C543	1-126-391-11	s	ELECT, CHIP 47uF 20% 6.3V
C544	1-126-391-11	s	ELECT, CHIP 47uF 20% 6.3V
C545	1-163-038-91	s	CERAMIC, CHIP 0.1uF 25V
C546	1-163-239-11	s	CERAMIC, CHIP 33pF 5% 50V[For NTSC]
C546	1-163-235-11	s	CERAMIC, CHIP 22pF 5% 50V [For PAL]
C547	1-163-037-11	s	CERAMIC, CHIP 0.022uF 10% 25V
C548	1-163-038-91	s	CERAMIC, CHIP 0.1uF 25V
C549	1-126-391-11	s	ELECT, CHIP 47uF 20% 6.3V
C550	1-163-251-11	s	CERAMIC, CHIP 100pF 5% 50V
C551	1-163-037-11	s	CERAMIC, CHIP 0.022uF 10% 25V
C552	1-163-038-91	s	CERAMIC, CHIP 0.1uF 25V
C553	1-163-038-91	s	CERAMIC, CHIP 0.1uF 25V
C601	1-163-037-11	s	CERAMIC, CHIP 0.022uF 10% 25V
C602	1-163-037-11	s	CERAMIC, CHIP 0.022uF 10% 25V
C603	1-163-037-11	s	CERAMIC, CHIP 0.022uF 10% 25V
C604	1-163-275-11	s	CERAMIC, CHIP 0.001uF 5% 50V
C605	1-126-401-11	s	ELECT, CHIP 1uF 20% 50V
C606	1-126-404-11	s	ELECT 4.7uF 20% 50V
C607	1-164-232-11	s	CERAMIC, CHIP 0.01uF 10% 100V
C608	1-163-037-11	s	CERAMIC, CHIP 0.022uF 10% 25V
C609	1-163-037-11	s	CERAMIC, CHIP 0.022uF 10% 25V
C610	1-163-259-91	s	CERAMIC, CHIP 220pF 5% 50V
C611	1-163-037-11	s	CERAMIC, CHIP 0.022uF 10% 25V [For NTSC]
C611	1-164-004-11	s	CERAMIC, CHIP 0.1uF 10% 25V [For PAL]

(IO-149/149A BOARD; Suffix -11, 12)

Ref. No. or Q'ty	Part No.	SP	Description
C612	1-163-227-11	s	CERAMIC, CHIP 10pF 5% 50V
C613	1-163-239-11	s	CERAMIC, CHIP 33pF 5% 50V[For NTSC]
C613	1-163-106-00	s	CERAMIC, CHIP 36pF 5% 50V [For PAL]
C614	1-163-243-11	s	CERAMIC, CHIP 47pF 5% 50V
C615	1-163-113-00	s	CERAMIC, CHIP 68pF 5% 50V
C616	1-164-232-11	s	CERAMIC, CHIP 0.01uF 10% 100V
C617	1-163-121-00	s	CERAMIC, CHIP 150pF 5% 50V
C618	1-164-232-11	s	CERAMIC, CHIP 0.01uF 10% 100V
C619	1-163-263-11	s	CERAMIC, CHIP 330pF 5% 50V
C620	1-163-809-11	s	CERAMIC, CHIP 0.047uF 10% 25V
C621	1-163-809-11	s	CERAMIC, CHIP 0.047uF 10% 25V
C622	1-163-038-91	s	CERAMIC, CHIP 0.1uF 25V
C623	1-163-038-91	s	CERAMIC, CHIP 0.1uF 25V
C624	1-163-038-91	s	CERAMIC, CHIP 0.1uF 25V
C625	1-163-037-11	s	CERAMIC, CHIP 0.022uF 10% 25V
C626	1-163-227-11	s	CERAMIC, CHIP 10pF 5% 50V
C627	1-126-391-11	s	ELECT, CHIP 47uF 20% 6.3V
C628	1-163-037-11	s	CERAMIC, CHIP 0.022uF 10% 25V
C629	1-126-391-11	s	ELECT, CHIP 47uF 20% 6.3V
C631	1-163-227-11	s	CERAMIC, CHIP 10pF 5% 50V
C632	1-126-401-11	s	ELECT, CHIP 1uF 20% 50V
C633	1-163-037-11	s	CERAMIC, CHIP 0.022uF 10% 25V
C634	1-163-243-11	s	CERAMIC, CHIP 47pF 5% 50V
C635	1-163-037-11	s	CERAMIC, CHIP 0.022uF 10% 25V
C636	1-163-037-11	s	CERAMIC, CHIP 0.022uF 10% 25V
C637	1-163-037-11	s	CERAMIC, CHIP 0.022uF 10% 25V
C638	1-163-038-91	s	CERAMIC, CHIP 0.1uF 25V
C639	1-163-165-00	s	CERAMIC, CHIP 22pF 5% 50V[For NTSC]
C639	1-163-102-00	s	CERAMIC, CHIP 24pF 5% 50V [For PAL]
C640	1-163-037-11	s	CERAMIC, CHIP 0.022uF 10% 25V
C641	1-163-038-91	s	CERAMIC, CHIP 0.1uF 25V
C642	1-163-037-11	s	CERAMIC, CHIP 0.022uF 10% 25V
C643	1-163-243-11	s	CERAMIC, CHIP 47pF 5% 50V
C644	1-163-037-11	s	CERAMIC, CHIP 0.022uF 10% 25V
C645	1-126-393-11	s	ELECT, CHIP 33uF 20% 10V
C646	1-163-037-11	s	CERAMIC, CHIP 0.022uF 10% 25V
C647	1-163-037-11	s	CERAMIC, CHIP 0.022uF 10% 25V
C648	1-163-037-11	s	CERAMIC, CHIP 0.022uF 10% 25V
C649	1-163-037-11	s	CERAMIC, CHIP 0.022uF 10% 25V
C650	1-126-393-11	s	ELECT, CHIP 33uF 20% 10V
C651	1-163-037-11	s	CERAMIC, CHIP 0.022uF 10% 25V
C652	1-163-237-11	s	CERAMIC, CHIP 27pF 5% 50V[For NTSC]
C652	1-163-239-11	s	CERAMIC, CHIP 33pF 5% 50V [For PAL]
C653	1-163-237-11	s	CERAMIC, CHIP 27pF 5% 50V[For NTSC]
C653	1-163-239-11	s	CERAMIC, CHIP 33pF 5% 50V [For PAL]
C654	1-163-245-11	s	CERAMIC, CHIP 56pF 5% 50V[For NTSC]
C654	1-163-113-00	s	CERAMIC, CHIP 68pF 5% 50V [For PAL]
C655	1-163-245-11	s	CERAMIC, CHIP 56pF 5% 50V[For NTSC]
C655	1-163-113-00	s	CERAMIC, CHIP 68pF 5% 50V [For PAL]
C656	1-163-237-11	s	CERAMIC, CHIP 27pF 5% 50V[For NTSC]
C656	1-163-239-11	s	CERAMIC, CHIP 33pF 5% 50V [For PAL]
C657	1-163-237-11	s	CERAMIC, CHIP 27pF 5% 50V[For NTSC]
C657	1-163-239-11	s	CERAMIC, CHIP 33pF 5% 50V [For PAL]
C658	1-163-037-11	s	CERAMIC, CHIP 0.022uF 10% 25V
C659	1-163-037-11	s	CERAMIC, CHIP 0.022uF 10% 25V
C660	1-163-037-11	s	CERAMIC, CHIP 0.022uF 10% 25V
C661	1-163-037-11	s	CERAMIC, CHIP 0.022uF 10% 25V
C663	1-163-133-00	s	CERAMIC, CHIP 470pF 5% 50V
C701	1-126-392-11	s	ELECT, CHIP 100uF 20% 6.3V

(IO-149/149A BOARD; Suffix -11, 12)

Ref. No. or Q'ty	Part No.	SP	Description
C702	1-126-392-11	s	ELECT, CHIP 100uF 20% 6.3V
C703	1-126-392-11	s	ELECT, CHIP 100uF 20% 6.3V
C704	1-163-037-11	s	CERAMIC, CHIP 0.022uF 10% 25V
C705	1-163-037-11	s	CERAMIC, CHIP 0.022uF 10% 25V
C706	1-163-037-11	s	CERAMIC, CHIP 0.022uF 10% 25V
C707	1-163-038-91	s	CERAMIC, CHIP 0.1uF 25V
C708	1-163-038-91	s	CERAMIC, CHIP 0.1uF 25V
C709	1-126-401-11	s	ELECT, CHIP 1uF 20% 50V
C710	1-163-275-11	s	CERAMIC, CHIP 0.001uF 5% 50V
C711	1-126-392-11	s	ELECT, CHIP 100uF 20% 6.3V
C712	1-163-243-11	s	CERAMIC, CHIP 47pF 5% 50V
C713	1-163-275-11	s	CERAMIC, CHIP 0.001uF 5% 50V
C714	1-126-393-11	s	ELECT, CHIP 33uF 20% 10V
C715	1-163-037-11	s	CERAMIC, CHIP 0.022uF 10% 25V
C716	1-126-392-11	s	ELECT, CHIP 100uF 20% 6.3V
C717	1-126-392-11	s	ELECT, CHIP 100uF 20% 6.3V
C718	1-163-037-11	s	CERAMIC, CHIP 0.022uF 10% 25V
C719	1-126-396-11	s	ELECT, CHIP 47uF 20% 16V
C720	1-163-037-11	s	CERAMIC, CHIP 0.022uF 10% 25V
C721	1-126-392-11	s	ELECT, CHIP 100uF 20% 6.3V
C722	1-163-275-11	s	CERAMIC, CHIP 0.001uF 5% 50V [For NTSC]
C723	1-163-038-91	s	CERAMIC, CHIP 0.1uF 25V
C724	1-126-396-11	s	ELECT, CHIP 47uF 20% 16V
C725	1-126-396-11	s	ELECT, CHIP 47uF 20% 16V
C726	1-163-251-11	s	CERAMIC, CHIP 100pF 5% 50V
C727	1-126-396-11	s	ELECT, CHIP 47uF 20% 16V
C728	1-126-396-11	s	ELECT, CHIP 47uF 20% 16V
C729	1-163-251-11	s	CERAMIC, CHIP 100pF 5% 50V
C730	1-126-392-11	s	ELECT, CHIP 100uF 20% 6.3V
C731	1-163-037-11	s	CERAMIC, CHIP 0.022uF 10% 25V
C732	1-126-392-11	s	ELECT, CHIP 100uF 20% 6.3V
C733	1-163-037-11	s	CERAMIC, CHIP 0.022uF 10% 25V
C735	1-126-401-11	s	ELECT, CHIP 1uF 20% 50V
C736	1-163-037-11	s	CERAMIC, CHIP 0.022uF 10% 25V
C737	1-163-037-11	s	CERAMIC, CHIP 0.022uF 10% 25V
C738	1-126-397-11	s	ELECT, CHIP 33uF 20% 25V [For NTSC]
C739	1-163-037-11	s	CERAMIC, CHIP 0.022uF 10% 25V
C740	1-126-401-11	s	ELECT, CHIP 1uF 20% 50V [For NTSC]
C741	1-126-401-11	s	ELECT, CHIP 1uF 20% 50V [For NTSC]
C742	1-126-396-11	s	ELECT, CHIP 47uF 20% 16V
C743	1-163-145-00	s	CERAMIC, CHIP 0.0015uF 5% 50V [For NTSC]
C744	1-164-232-11	s	CERAMIC, CHIP 0.01uF 10% 100V [For NTSC]
C745	1-126-392-11	s	ELECT, CHIP 100uF 20% 6.3V
C746	1-126-392-11	s	ELECT, CHIP 100uF 20% 6.3V
C747	1-164-232-11	s	CERAMIC, CHIP 0.01uF 10% 100V [For NTSC]
C748	1-163-037-11	s	CERAMIC, CHIP 0.022uF 10% 25V
C749	1-163-037-11	s	CERAMIC, CHIP 0.022uF 10% 25V
C750	1-126-391-11	s	ELECT, CHIP 47uF 20% 6.3V
C751	1-126-391-11	s	ELECT, CHIP 47uF 20% 6.3V
C752	1-163-037-11	s	CERAMIC, CHIP 0.022uF 10% 25V

(IO-149/149A BOARD; Suffix -11, 12)

Ref. No. or Q'ty	Part No.	SP	Description
			[For NTSC]
C753	1-126-394-11	s	ELECT, CHIP 10uF 20% 16V
C754	1-126-390-11	s	ELECT, CHIP 22uF 20% 6.3V[For NTSC]
C755	1-163-037-11	s	CERAMIC, CHIP 0.022uF 10% 25V
C901	1-163-038-91	s	CERAMIC, CHIP 0.1uF 25V
C902	1-126-392-11	s	ELECT, CHIP 100uF 20% 6.3V
C903	1-163-239-11	s	CERAMIC, CHIP 33pF 5% 50V
C904	1-163-037-11	s	CERAMIC, CHIP 0.022uF 10% 25V
C905	1-163-037-11	s	CERAMIC, CHIP 0.022uF 10% 25V
C906	1-163-037-11	s	CERAMIC, CHIP 0.022uF 10% 25V
C907	1-163-037-11	s	CERAMIC, CHIP 0.022uF 10% 25V
C908	1-163-037-11	s	CERAMIC, CHIP 0.022uF 10% 25V
C909	1-163-037-11	s	CERAMIC, CHIP 0.022uF 10% 25V
C911	1-163-037-11	s	CERAMIC, CHIP 0.022uF 10% 25V
C914	1-163-037-11	s	CERAMIC, CHIP 0.022uF 10% 25V
C915	1-163-037-11	s	CERAMIC, CHIP 0.022uF 10% 25V
C916	1-126-392-11	s	ELECT, CHIP 100uF 20% 6.3V
C917	1-163-037-11	s	CERAMIC, CHIP 0.022uF 10% 25V
C918	1-163-037-11	s	CERAMIC, CHIP 0.022uF 10% 25V
C919	1-163-037-11	s	CERAMIC, CHIP 0.022uF 10% 25V
C920	1-163-037-11	s	CERAMIC, CHIP 0.022uF 10% 25V
C921	1-163-037-11	s	CERAMIC, CHIP 0.022uF 10% 25V
C922	1-126-392-11	s	ELECT, CHIP 100uF 20% 6.3V
C923	1-163-038-91	s	CERAMIC, CHIP 0.1uF 25V
C924	1-163-038-91	s	CERAMIC, CHIP 0.1uF 25V
C925	1-163-037-11	s	CERAMIC, CHIP 0.022uF 10% 25V
C926	1-163-037-11	s	CERAMIC, CHIP 0.022uF 10% 25V
C927	1-163-038-91	s	CERAMIC, CHIP 0.1uF 25V
C928	1-163-037-11	s	CERAMIC, CHIP 0.022uF 10% 25V
C929	1-163-038-91	s	CERAMIC, CHIP 0.1uF 25V
C930	1-163-037-11	s	CERAMIC, CHIP 0.022uF 10% 25V
C931	1-163-037-11	s	CERAMIC, CHIP 0.022uF 10% 25V
C932	1-163-037-11	s	CERAMIC, CHIP 0.022uF 10% 25V
C933	1-163-251-11	s	CERAMIC, CHIP 100pF 5% 50V
C934	1-163-251-11	s	CERAMIC, CHIP 100pF 5% 50V
C935	1-126-392-11	s	ELECT, CHIP 100uF 20% 6.3V
C936	1-126-392-11	s	ELECT, CHIP 100uF 20% 6.3V
C937	1-163-251-11	s	CERAMIC, CHIP 100pF 5% 50V
C938	1-163-037-11	s	CERAMIC, CHIP 0.022uF 10% 25V
C939	1-163-037-11	s	CERAMIC, CHIP 0.022uF 10% 25V
C940	1-126-396-11	s	ELECT, CHIP 47uF 20% 16V
C941	1-163-037-11	s	CERAMIC, CHIP 0.022uF 10% 25V
C942	1-126-392-11	s	ELECT, CHIP 100uF 20% 6.3V
C943	1-163-169-00	s	CERAMIC, CHIP 33pF 5% 50V
C945	1-163-037-11	s	CERAMIC, CHIP 0.022uF 10% 25V
C946	1-163-037-11	s	CERAMIC, CHIP 0.022uF 10% 25V
C947	1-126-396-11	s	ELECT, CHIP 47uF 20% 16V
C948	1-163-169-00	s	CERAMIC, CHIP 33pF 5% 50V
C949	1-126-392-11	s	ELECT, CHIP 100uF 20% 6.3V
C950	1-163-037-11	s	CERAMIC, CHIP 0.022uF 10% 25V
C951	1-163-239-11	s	CERAMIC, CHIP 33pF 5% 50V
C952	1-163-037-11	s	CERAMIC, CHIP 0.022uF 10% 25V
C953	1-163-169-00	s	CERAMIC, CHIP 33pF 5% 50V
C955	1-163-239-11	s	CERAMIC, CHIP 33pF 5% 50V
C956	1-163-037-11	s	CERAMIC, CHIP 0.022uF 10% 25V
C957	1-163-037-11	s	CERAMIC, CHIP 0.022uF 10% 25V
C961	1-126-392-11	s	ELECT, CHIP 100uF 20% 6.3V
C962	1-163-037-11	s	CERAMIC, CHIP 0.022uF 10% 25V

(IO-149/149A BOARD; Suffix -11, 12)

Ref. No. or Q'ty	Part No.	SP	Description
C965	1-126-392-11	s	ELECT, CHIP 100uF 20% 6.3V
C966	1-126-392-11	s	ELECT, CHIP 100uF 20% 6.3V
C967	1-163-037-11	s	CERAMIC, CHIP 0.022uF 10% 25V
C968	1-163-037-11	s	CERAMIC, CHIP 0.022uF 10% 25V
C969	1-126-392-11	s	ELECT, CHIP 100uF 20% 6.3V
C970	1-163-037-11	s	CERAMIC, CHIP 0.022uF 10% 25V
C971	1-163-037-11	s	CERAMIC, CHIP 0.022uF 10% 25V
C972	1-163-037-11	s	CERAMIC, CHIP 0.022uF 10% 25V
C973	1-163-037-11	s	CERAMIC, CHIP 0.022uF 10% 25V
C980	1-163-037-11	s	CERAMIC, CHIP 0.022uF 10% 25V
C981	1-126-394-11	s	ELECT, CHIP 10uF 20% 16V
C982	1-126-394-11	s	ELECT, CHIP 10uF 20% 16V
C984	1-163-809-11	s	CERAMIC, CHIP 0.047uF 10% 25V
C986	1-163-038-91	s	CERAMIC, CHIP 0.1uF 25V
C987	1-163-227-11	s	CERAMIC, CHIP 10pF 5% 50V
C1001	1-126-393-11	s	ELECT, CHIP 33uF 20% 10V
C1002	1-163-038-91	s	CERAMIC, CHIP 0.1uF 25V
C1003	1-163-037-11	s	CERAMIC, CHIP 0.022uF 10% 25V
C1004	1-163-037-11	s	CERAMIC, CHIP 0.022uF 10% 25V
C1005	1-126-393-11	s	ELECT, CHIP 33uF 20% 10V
C1006	1-163-249-11	s	CERAMIC, CHIP 82pF 5% 50V
C1007	1-163-037-11	s	CERAMIC, CHIP 0.022uF 10% 25V
C1008	1-163-037-11	s	CERAMIC, CHIP 0.022uF 10% 25V
C1009	1-163-037-11	s	CERAMIC, CHIP 0.022uF 10% 25V
C1010	1-163-235-11	s	CERAMIC, CHIP 22pF 5% 50V
C1011	1-163-243-11	s	CERAMIC, CHIP 47pF 5% 50V
C1012	1-126-393-11	s	ELECT, CHIP 33uF 20% 10V
C1013	1-163-038-91	s	CERAMIC, CHIP 0.1uF 25V
C1014	1-163-038-91	s	CERAMIC, CHIP 0.1uF 25V
C1015	1-163-037-11	s	CERAMIC, CHIP 0.022uF 10% 25V
C1016	1-163-263-11	s	CERAMIC, CHIP 330pF 5% 50V
C1017	1-163-037-11	s	CERAMIC, CHIP 0.022uF 10% 25V
C1018	1-163-037-11	s	CERAMIC, CHIP 0.022uF 10% 25V
C1019	1-163-037-11	s	CERAMIC, CHIP 0.022uF 10% 25V
C1020	1-163-038-91	s	CERAMIC, CHIP 0.1uF 25V
C1021	1-163-038-91	s	CERAMIC, CHIP 0.1uF 25V
C1022	1-126-390-11	s	ELECT, CHIP 22uF 20% 6.3V
C1023	1-126-390-11	s	ELECT, CHIP 22uF 20% 6.3V
C1024	1-163-037-11	s	CERAMIC, CHIP 0.022uF 10% 25V
C1025	1-163-239-11	s	CERAMIC, CHIP 33pF 5% 50V
C1026	1-163-017-00	s	CERAMIC, CHIP 0.0047uF 5% 50V
C1027	1-163-017-00	s	CERAMIC, CHIP 0.0047uF 5% 50V
C1028	1-163-121-00	s	CERAMIC, CHIP 150pF 5% 50V
C1029	1-163-038-91	s	CERAMIC, CHIP 0.1uF 25V
C1030	1-163-038-91	s	CERAMIC, CHIP 0.1uF 25V
C1031	1-126-391-11	s	ELECT, CHIP 47uF 20% 6.3V
C1032	1-163-037-11	s	CERAMIC, CHIP 0.022uF 10% 25V
C1033	1-163-037-11	s	CERAMIC, CHIP 0.022uF 10% 25V
C1034	1-163-037-11	s	CERAMIC, CHIP 0.022uF 10% 25V
C1035	1-163-037-11	s	CERAMIC, CHIP 0.022uF 10% 25V
C1036	1-163-133-00	s	CERAMIC, CHIP 470pF 5% 50V
C1037	1-126-390-11	s	ELECT, CHIP 22uF 20% 6.3V
C1038	1-163-037-11	s	CERAMIC, CHIP 0.022uF 10% 25V
C1039	1-163-037-11	s	CERAMIC, CHIP 0.022uF 10% 25V
C1040	1-163-037-11	s	CERAMIC, CHIP 0.022uF 10% 25V
C1041	1-163-121-00	s	CERAMIC, CHIP 150pF 5% 50V
C1042	1-163-037-11	s	CERAMIC, CHIP 0.022uF 10% 25V
C1043	1-163-038-91	s	CERAMIC, CHIP 0.1uF 25V
C1044	1-163-037-11	s	CERAMIC, CHIP 0.022uF 10% 25V

(IO-149/149A BOARD; Suffix -11, 12)

Ref. No. or Q'ty	Part No.	SP	Description
C1045	1-163-235-11	s	CERAMIC, CHIP 22pF 5% 50V
C1046	1-163-239-11	s	CERAMIC, CHIP 33pF 5% 50V
C1047	1-126-390-11	s	ELECT, CHIP 22uF 20% 6.3V
C1048	1-163-121-00	s	CERAMIC, CHIP 150pF 5% 50V
C1049	1-163-102-00	s	CERAMIC, CHIP 24pF 5% 50V
C1050	1-126-390-11	s	ELECT, CHIP 22uF 20% 6.3V
C1051	1-163-038-91	s	CERAMIC, CHIP 0.1uF 25V
C1052	1-163-037-11	s	CERAMIC, CHIP 0.022uF 10% 25V
C1053	1-163-038-91	s	CERAMIC, CHIP 0.1uF 25V
C1054	1-163-241-11	s	CERAMIC, CHIP 39pF 5% 50V
C1055	1-163-251-11	s	CERAMIC, CHIP 100pF 5% 50V
C1056	1-163-263-11	s	CERAMIC, CHIP 330pF 5% 50V
C1057	1-164-232-11	s	CERAMIC, CHIP 0.01uF 10% 100V
C1058	1-163-037-11	s	CERAMIC, CHIP 0.022uF 10% 25V
C1059	1-163-263-11	s	CERAMIC, CHIP 330pF 5% 50V
C1060	1-126-390-11	s	ELECT, CHIP 22uF 20% 6.3V
C1061	1-163-038-91	s	CERAMIC, CHIP 0.1uF 25V
C1062	1-163-037-11	s	CERAMIC, CHIP 0.022uF 10% 25V
C1063	1-126-390-11	s	ELECT, CHIP 22uF 20% 6.3V
C1064	1-163-017-00	s	CERAMIC, CHIP 0.0047uF 5% 50V
C1065	1-126-390-11	s	ELECT, CHIP 22uF 20% 6.3V
C1066	1-163-037-11	s	CERAMIC, CHIP 0.022uF 10% 25V
C1067	1-163-037-11	s	CERAMIC, CHIP 0.022uF 10% 25V
C1068	1-163-037-11	s	CERAMIC, CHIP 0.022uF 10% 25V
C1069	1-126-396-11	s	ELECT, CHIP 47uF 20% 16V
C1070	1-163-133-00	s	CERAMIC, CHIP 470pF 5% 50V
C1071	1-163-235-11	s	CERAMIC, CHIP 22pF 5% 50V
C1072	1-126-394-11	s	ELECT, CHIP 10uF 20% 16V
C1073	1-163-037-11	s	CERAMIC, CHIP 0.022uF 10% 25V
C1074	1-163-038-91	s	CERAMIC, CHIP 0.1uF 25V
C1075	1-126-401-11	s	ELECT, CHIP 1uF 20% 50V
C1076	1-163-037-11	s	CERAMIC, CHIP 0.022uF 10% 25V
C1078	1-163-038-91	s	CERAMIC, CHIP 0.1uF 25V
C1079	1-164-232-11	s	CERAMIC, CHIP 0.01uF 10% 100V
C1080	1-163-038-91	s	CERAMIC, CHIP 0.1uF 25V
C1081	1-163-139-00	s	CERAMIC, CHIP 820pF 5% 50V
C1082	1-163-259-91	s	CERAMIC, CHIP 220pF 5% 50V
C1083	1-163-037-11	s	CERAMIC, CHIP 0.022uF 10% 25V
C1084	1-164-232-11	s	CERAMIC, CHIP 0.01uF 10% 100V
C1085	1-126-391-11	s	ELECT, CHIP 47uF 20% 6.3V
C1086	1-126-391-11	s	ELECT, CHIP 47uF 20% 6.3V
C1087	1-126-391-11	s	ELECT, CHIP 47uF 20% 6.3V
C1088	1-163-038-91	s	CERAMIC, CHIP 0.1uF 25V
C1089	1-163-038-91	s	CERAMIC, CHIP 0.1uF 25V
C1090	1-163-275-11	s	CERAMIC, CHIP 0.001uF 5% 50V
C1091	1-164-222-11	s	CERAMIC, CHIP 0.22uF 25V
C1092	1-164-222-11	s	CERAMIC, CHIP 0.22uF 25V
C1093	1-164-222-11	s	CERAMIC, CHIP 0.22uF 25V
C1094	1-164-222-11	s	CERAMIC, CHIP 0.22uF 25V
C1095	1-163-038-91	s	CERAMIC, CHIP 0.1uF 25V
C1096	1-163-038-91	s	CERAMIC, CHIP 0.1uF 25V
C1097	1-163-038-91	s	CERAMIC, CHIP 0.1uF 25V
C1098	1-163-038-91	s	CERAMIC, CHIP 0.1uF 25V
C1099	1-163-038-91	s	CERAMIC, CHIP 0.1uF 25V
CT601	1-141-345-11	s	CAP, TRIMMER, CHIP 40pF
CT602	1-141-345-11	s	CAP, TRIMMER, CHIP 40pF
CT1001	1-141-322-11	s	CAP, TRIMMER, CHIP 20pF
D1	8-719-941-04	s	DIODE SB007-03CP

(IO-149/149A BOARD; Suffix -11, 12)

Ref. No. or Q'ty	Part No.	SP	Description	
D2	8-719-941-04	s	DIODE SB007-03CP	
D3	8-719-053-18	s	DIODE 1SR154-400TE-25	
D4	8-719-053-18	s	DIODE 1SR154-400TE-25	
D5	8-719-053-18	s	DIODE 1SR154-400TE-25	
D101	8-719-041-39	s	DIODE KV1470	
D102	8-719-041-39	s	DIODE KV1470	
D103	8-719-041-39	s	DIODE KV1470	
D104	8-719-941-23	s	DIODE DA204U	
D105	8-719-941-23	s	DIODE DA204U	
D106	8-719-989-08	s	DIODE RB717F	
D301	8-719-976-99	s	DIODE DTZ5.1B	
D302	8-719-941-23	s	DIODE DA204U	
D501	8-719-941-23	s	DIODE DA204U	
D601	8-719-002-81	s	DIODE 1T363A-M20-T8A	
D602	8-719-002-81	s	DIODE 1T363A-M20-T8A	
D701	8-719-941-23	s	DIODE DA204U	[For NTSC]
D702	8-719-056-74	s	DIODE UDZ-TE-17-3.0B	
D703	8-719-024-81	s	DIODE 1SS300-TE85L	
D901	8-719-941-04	s	DIODE SB007-03CP	
D902	8-719-024-81	s	DIODE 1SS300-TE85L	
D904	8-719-045-99	s	DIODE RD2.2M-T1B	
D905	8-719-045-99	s	DIODE RD2.2M-T1B	
D906	8-719-941-23	s	DIODE DA204U	
D1001	8-719-041-39	s	DIODE KV1470	
D1002	8-719-941-23	s	DIODE DA204U	[For PAL]
D1003	8-719-941-23	s	DIODE DA204U	[For PAL]
D1004	8-719-002-81	s	DIODE 1T363A-M20-T8A	
D1005	8-719-941-23	s	DIODE DA204U	
D1006	8-719-941-23	s	DIODE DA204U	
D1007	8-719-941-23	s	DIODE DA204U	[For PAL]
F1	⚠ 1-576-124-11	s	LINK, IC, CHIP 1A	
F2	⚠ 1-533-282-21	s	LINK, IC, CHIP 2A	
F3	⚠ 1-576-124-11	s	LINK, IC, CHIP 1A	
F4	⚠ 1-533-282-21	s	LINK, IC, CHIP 2A	
F5	⚠ 1-576-124-11	s	LINK, IC, CHIP 1A	
F6	⚠ 1-533-282-21	s	LINK, IC, CHIP 2A	
FB800	1-543-309-21	s	BEAD, FERRITE	
FL101	1-233-598-11	s	FILTER, LOW-PASS	
FL102	1-233-598-11	s	FILTER, LOW-PASS	
FL103	1-233-614-11	s	FILTER, LOW-PASS	
FL104	1-239-771-11	s	FILTER, LOW-PASS	
FL701	1-233-614-11	s	FILTER, LOW-PASS	
FL901	1-233-614-11	s	FILTER, LOW-PASS	
FL902	1-233-598-11	s	FILTER, LOW-PASS	
FL903	1-233-598-11	s	FILTER, LOW-PASS	
FL1001	1-239-719-11	s	FILTER, NOISE, CHIP	
FL1002	1-239-719-11	s	FILTER, NOISE, CHIP	
FL1003	1-239-719-11	s	FILTER, NOISE, CHIP	
IC1	8-759-157-17	s	IC PQ05SZ1U	
IC2	8-759-157-17	s	IC PQ05SZ1U	
IC3	8-759-172-41	s	IC L78M09T-TL	
IC4	8-759-172-41	s	IC L78M09T-TL	
IC5	8-759-822-95	s	IC L79M05T-FA	
IC6	8-759-822-95	s	IC L79M05T-FA	
IC7	8-759-822-95	s	IC L79M05T-FA	
IC8	8-759-157-17	s	IC PQ05SZ1U	
IC101	8-759-198-63	s	IC S-81230SG-QB-T1	

(IO-149/149A BOARD; Suffix -11, 12)

Ref. No. or Q'ty	Part No.	SP	Description	
IC102	8-759-278-58	s	IC NJM4558V-TE2	
IC103	8-759-278-58	s	IC NJM4558V-TE2	
IC105	8-759-278-58	s	IC NJM4558V-TE2	
IC106	8-759-082-61	s	IC TC4W53FU	[For NTSC]
IC107	8-759-076-06	s	IC TL064CPW	
IC108	8-759-076-06	s	IC TL064CPW	
IC109	8-752-052-77	s	IC CXA1450M	
IC110	8-752-363-60	s	IC CXD2307R-T6	
IC111	8-759-287-54	s	IC TL084CPW-E20	
IC112	8-759-287-54	s	IC TL084CPW-E20	
IC113	8-759-287-54	s	IC TL084CPW-E20	
IC114	8-759-066-59	s	IC TC74HC4053AFS	
IC115	8-752-054-80	s	IC CXA1521M	
IC116	8-752-054-80	s	IC CXA1521M	
IC117	8-759-906-59	s	IC CX22017	
IC118	8-759-907-81	s	IC SN74LS221NS	
IC301	8-759-082-59	s	IC TC7W32FU	
IC302	8-759-082-61	s	IC TC4W53FU	
IC304	8-759-287-54	s	IC TL084CPW-E20	
IC305	8-759-082-61	s	IC TC4W53FU	
IC306	8-752-052-73	s	IC CXA1451M	
IC307	8-752-052-73	s	IC CXA1451M	
IC308	8-759-262-00	s	IC MC14576CF	
IC309	8-752-052-73	s	IC CXA1451M	
IC310	8-752-052-73	s	IC CXA1451M	
IC311	8-752-052-73	s	IC CXA1451M	
IC312	8-759-082-61	s	IC TC4W53FU	
IC501	8-759-082-57	s	IC TC7W04FU	
IC502	8-752-052-77	s	IC CXA1450M	
IC503	8-752-052-77	s	IC CXA1450M	
IC504	8-759-173-16	s	IC TL062CPW	
IC505	8-759-076-06	s	IC TL064CPW	
IC506	8-759-430-88	s	IC TC74HC4051AFS(EL)	
IC507	8-759-324-03	s	IC HA17431UA-TL	
IC508	8-759-076-06	s	IC TL064CPW	
IC509	8-752-052-77	s	IC CXA1450M	
IC510	8-759-262-03	s	IC MC14577CF	
IC512	8-759-987-27	s	IC LM1881M	
IC513	8-759-079-66	s	IC TC74VHC123AFS(EL)	
IC514	8-759-980-04	s	IC LM311PS	
IC515	8-759-702-08	s	IC NJM360M	
IC516	8-752-052-77	s	IC CXA1450M	
IC601	8-759-082-57	s	IC TC7W04FU	
IC602	8-759-250-81	s	IC TC5081AP	
IC603	8-759-079-67	s	IC TC74VHC125FS(EL)	
IC604	8-759-058-58	s	IC TC7S04FU(TE85R)	
IC605	8-759-357-24	s	IC MC68HC705C8AFU	
IC606	8-752-335-47	s	IC CXD1216M	
IC607	8-759-066-59	s	IC TC74HC4053AFS	
IC608	8-759-241-03	s	IC TC74HC191AF	
IC609	8-759-082-57	s	IC TC7W04FU	
IC610	8-759-271-86	s	IC TC7SH04FU	
IC611	8-759-271-86	s	IC TC7SH04FU	
IC612	8-759-079-66	s	IC TC74VHC123AFS(EL)	
IC613	8-759-079-80	s	IC TC74VHC175FS(EL)	
IC614	8-759-519-49	s	IC CXD8165Q	
IC615	8-752-339-46	s	IC CXD1177Q	
IC616	8-759-082-57	s	IC TC7W04FU	
IC617	8-759-066-59	s	IC TC74HC4053AFS	

(IO-149/149A BOARD; Suffix -11, 12)

Ref. No. or Q'ty	Part No.	SP	Description	
IC618	8-759-271-86	s	IC TC7SH04FU	
IC619	8-759-271-86	s	IC TC7SH04FU	
IC701	8-759-079-72	s	IC TC74VHC139FS(EL)	
IC702	8-759-079-46	s	IC TC74VHC00FS(EL)	
IC703	8-759-514-57	s	IC BA7046F	
IC704	8-759-987-27	s	IC LM1881M	
IC705	8-759-710-12	s	IC NJM2230M	
IC706	8-759-035-90	s	IC TC7S02F	
IC707	8-759-082-61	s	IC TC4W53FU	
IC708	8-759-082-61	s	IC TC4W53FU	
IC709	8-759-066-59	s	IC TC74HC4053AFS	
IC710	8-759-082-61	s	IC TC4W53FU	
IC711	8-752-375-75	s	IC CXD2131Q-T4	
IC712	8-759-173-16	s	IC TL062CPW	
IC713	8-759-079-60	s	IC TC74VHC32FS(EL)	[For NTSC]
IC901	8-759-387-83	s	IC MB40569PFV-ER	
IC902	8-759-277-19	s	IC UPD485505G-35	
IC903	8-759-277-19	s	IC UPD485505G-35	
IC904	8-759-277-19	s	IC UPD485505G-35	
IC905	8-759-513-76	s	IC CXD8161AQ	
IC906	8-759-058-64	s	IC TC7S32FU(TE85R)	
IC907	8-759-082-57	s	IC TC7W04FU	
IC908	8-752-363-60	s	IC CXD2307R-T6	
IC909	8-759-173-16	s	IC TL062CPW	
IC910	8-752-052-73	s	IC CXA1451M	
IC911	8-752-052-73	s	IC CXA1451M	
IC912	8-752-052-73	s	IC CXA1451M	
IC913	8-759-089-61	s	IC TC74HC4052AFS(EL)	
IC915	8-759-066-61	s	IC TC4053BFS	
IC916	8-759-262-00	s	IC MC14576CF	
IC917	8-759-058-64	s	IC TC7S32FU(TE85R)	
IC918	8-759-287-54	s	IC TL084CPW-E20	
IC1001	8-759-058-58	s	IC TC7S04FU(TE85R)	
IC1002	8-759-184-64	s	IC TC4W66FU(TE12R)	
IC1003	8-752-339-04	s	IC CXD2208Q	
IC1004	8-759-076-06	s	IC TL064CPW	
IC1005	8-759-076-06	s	IC TL064CPW	
IC1006	8-759-173-16	s	IC TL062CPW	
IC1007	8-759-058-58	s	IC TC7S04FU(TE85R)	
IC1008	8-759-082-60	s	IC TC7S66FU	
IC1009	8-759-520-55	s	IC CXD8243AM	
IC1010	8-759-079-49	s	IC TC74VHC04FS(EL)	
IC1011	8-759-184-64	s	IC TC4W66FU(TE12R)	
IC1012	8-759-066-59	s	IC TC74HC4053AFS	
IC1013	8-759-079-66	s	IC TC74VHC123AFS(EL)	
IC1014	8-759-987-27	s	IC LM1881M	
IC1015	8-759-907-81	s	IC SN74LS221NS	
IC1016	8-759-324-03	s	IC HA17431UA-TL	
IC1017	8-759-186-54	s	IC TC74VHC164F(EL)	
IC1018	8-759-324-03	s	IC HA17431UA-TL	
IC1019	8-759-079-61	s	IC TC74VHC74FS(EL)	
IC1020	8-759-079-66	s	IC TC74VHC123AFS(EL)	
IC1021	8-759-907-81	s	IC SN74LS221NS	
IC1022	8-759-058-64	s	IC TC7S32FU(TE85R)	
IC1023	8-759-079-61	s	IC TC74VHC74FS(EL)	
IC1024	8-759-066-59	s	IC TC74HC4053AFS	
IC1025	8-759-079-46	s	IC TC74VHC00FS(EL)	
IC1026	8-759-082-61	s	IC TC4W53FU	

(IO-149/149A BOARD; Suffix -11, 12)

Ref. No. or Q'ty	Part No.	SP	Description	
L101	1-414-402-11	s	INDUCTOR, CHIP 47uH	
L102	1-414-400-11	s	INDUCTOR, CHIP 22uH	
L103	1-414-400-11	s	INDUCTOR, CHIP 22uH	
L104	1-414-402-11	s	INDUCTOR, CHIP 47uH	
L105	1-414-402-11	s	INDUCTOR, CHIP 47uH	
L106	1-414-400-11	s	INDUCTOR, CHIP 22uH	
L107	1-414-400-11	s	INDUCTOR, CHIP 22uH	
L108	1-414-402-11	s	INDUCTOR, CHIP 47uH	
L109	1-414-402-11	s	INDUCTOR, CHIP 47uH	
L110	1-414-402-11	s	INDUCTOR, CHIP 47uH	
L111	1-414-402-11	s	INDUCTOR, CHIP 47uH	
L112	1-414-404-11	s	INDUCTOR, CHIP 100uH	
L113	1-414-402-11	s	INDUCTOR, CHIP 47uH	
L114	1-414-404-11	s	INDUCTOR, CHIP 100uH	
L115	1-410-385-11	s	INDUCTOR, CHIP 22uH	
L116	1-410-385-11	s	INDUCTOR, CHIP 22uH	[For PAL]
L117	1-410-393-11	s	INDUCTOR, CHIP 100uH	
L301	1-414-402-11	s	INDUCTOR, CHIP 47uH	
L302	1-414-402-11	s	INDUCTOR, CHIP 47uH	
L303	1-414-402-11	s	INDUCTOR, CHIP 47uH	
L304	1-414-402-11	s	INDUCTOR, CHIP 47uH	
L305	1-410-391-11	s	INDUCTOR, CHIP 68uH	[For NTSC]
L305	1-410-393-11	s	INDUCTOR, CHIP 100uH	[For PAL]
L306	1-410-391-11	s	INDUCTOR, CHIP 68uH	[For NTSC]
L306	1-410-393-11	s	INDUCTOR, CHIP 100uH	[For PAL]
L307	1-414-402-11	s	INDUCTOR, CHIP 47uH	
L308	1-414-402-11	s	INDUCTOR, CHIP 47uH	
L309	1-414-402-11	s	INDUCTOR, CHIP 47uH	
L310	1-410-387-11	s	INDUCTOR, CHIP 33uH	
L311	1-410-387-11	s	INDUCTOR, CHIP 33uH	
L312	1-414-402-11	s	INDUCTOR, CHIP 47uH	
L313	1-414-402-11	s	INDUCTOR, CHIP 47uH	
L314	1-410-389-31	s	INDUCTOR, CHIP 47uH	
L315	1-410-387-11	s	INDUCTOR, CHIP 33uH	
L501	1-410-390-11	s	INDUCTOR, CHIP 56uH	[For NTSC]
L501	1-410-392-11	s	INDUCTOR, CHIP 82uH	[For PAL]
L502	1-410-393-11	s	INDUCTOR, CHIP 100uH	
L503	1-414-402-11	s	INDUCTOR, CHIP 47uH	
L504	1-414-402-11	s	INDUCTOR, CHIP 47uH	
L505	1-410-391-11	s	INDUCTOR, CHIP 68uH	
L506	1-414-402-11	s	INDUCTOR, CHIP 47uH	
L507	1-414-402-11	s	INDUCTOR, CHIP 47uH	
L601	1-414-402-11	s	INDUCTOR, CHIP 47uH	
L602	1-414-402-11	s	INDUCTOR, CHIP 47uH	
L603	1-414-400-11	s	INDUCTOR, CHIP 22uH	
L604	1-414-400-11	s	INDUCTOR, CHIP 22uH	
L605	1-410-389-31	s	INDUCTOR, CHIP 47uH	[For NTSC]
L605	1-410-386-11	s	INDUCTOR, CHIP 27uH	[For PAL]
L606	1-410-389-31	s	INDUCTOR, CHIP 47uH	[For NTSC]
L606	1-410-386-11	s	INDUCTOR, CHIP 27uH	[For PAL]
L607	1-410-389-31	s	INDUCTOR, CHIP 47uH	[For NTSC]
L607	1-410-386-11	s	INDUCTOR, CHIP 27uH	[For PAL]
L608	1-410-389-31	s	INDUCTOR, CHIP 47uH	[For NTSC]
L608	1-410-386-11	s	INDUCTOR, CHIP 27uH	[For PAL]
L701	1-414-400-11	s	INDUCTOR, CHIP 22uH	
L702	1-414-400-11	s	INDUCTOR, CHIP 22uH	
L703	1-414-402-11	s	INDUCTOR, CHIP 47uH	
L704	1-414-402-11	s	INDUCTOR, CHIP 47uH	
L705	1-414-402-11	s	INDUCTOR, CHIP 47uH	[For NTSC]

(IO-149/149A BOARD; Suffix -11, 12)

Ref. No. or Q'ty	Part No.	SP	Description	
L901	1-414-400-11	s	INDUCTOR, CHIP 22uH	
L902	1-414-400-11	s	INDUCTOR, CHIP 22uH	
L903	1-410-373-31	s	INDUCTOR, CHIP 2.2uH	[For NTSC]
L903	1-410-372-21	s	INDUCTOR, CHIP 1.8uH	[For PAL]
L904	1-410-373-31	s	INDUCTOR, CHIP 2.2uH	
L905	1-414-402-11	s	INDUCTOR, CHIP 47uH	
L906	1-410-373-31	s	INDUCTOR, CHIP 2.2uH	[For NTSC]
L906	1-410-372-21	s	INDUCTOR, CHIP 1.8uH	[For PAL]
L907	1-414-402-11	s	INDUCTOR, CHIP 47uH	
L908	1-414-402-11	s	INDUCTOR, CHIP 47uH	
L909	1-414-400-11	s	INDUCTOR, CHIP 22uH	
L910	1-414-400-11	s	INDUCTOR, CHIP 22uH	
L1001	1-414-402-11	s	INDUCTOR, CHIP 47uH	
L1002	1-410-387-11	s	INDUCTOR, CHIP 33uH	
L1003	1-410-375-11	s	INDUCTOR, CHIP 3.3uH	
L1004	1-410-389-31	s	INDUCTOR, CHIP 47uH	[For NTSC]
L1004	1-410-387-11	s	INDUCTOR, CHIP 33uH	[For PAL]
L1005	1-410-378-11	s	INDUCTOR, CHIP 5.6uH	
L1006	1-414-404-11	s	INDUCTOR, CHIP 100uH	
L1007	1-414-402-11	s	INDUCTOR, CHIP 47uH	
L1008	1-410-393-11	s	INDUCTOR, CHIP 100uH	
L1009	1-410-393-11	s	INDUCTOR, CHIP 100uH	
L1010	1-410-393-11	s	INDUCTOR, CHIP 100uH	
L1011	1-414-404-11	s	INDUCTOR, CHIP 100uH	
L1012	1-410-393-11	s	INDUCTOR, CHIP 100uH	
L1013	1-414-404-11	s	INDUCTOR, CHIP 100uH	
Q101	8-729-117-32	s	TRANSISTOR 2SC4177	
Q102	8-729-117-32	s	TRANSISTOR 2SC4177	
Q103	8-729-117-32	s	TRANSISTOR 2SC4177	
Q104	8-729-140-63	s	TRANSISTOR 2SA1611-M5M6	
Q105	8-729-117-32	s	TRANSISTOR 2SC4177	
Q106	8-729-117-32	s	TRANSISTOR 2SC4177	
Q107	8-729-117-32	s	TRANSISTOR 2SC4177	
Q108	8-729-923-06	s	TRANSISTOR FMW-8	
Q109	8-729-923-06	s	TRANSISTOR FMW-8	
Q110	8-729-923-06	s	TRANSISTOR FMW-8	
Q111	8-729-904-04	s	TRANSISTOR FMS2	
Q112	8-729-904-04	s	TRANSISTOR FMS2	
Q113	8-729-904-04	s	TRANSISTOR FMS2	
Q114	8-729-903-82	s	TRANSISTOR FMW2	
Q115	8-729-903-82	s	TRANSISTOR FMW2	
Q116	8-729-903-82	s	TRANSISTOR FMW2	
Q117	8-729-931-46	s	TRANSISTOR FMW7	
Q118	8-729-931-46	s	TRANSISTOR FMW7	
Q119	8-729-931-46	s	TRANSISTOR FMW7	
Q120	8-729-907-26	s	TRANSISTOR IMX1	
Q121	8-729-907-26	s	TRANSISTOR IMX1	
Q122	8-729-907-26	s	TRANSISTOR IMX1	
Q123	8-729-143-14	s	TRANSISTOR 2SC4176-B35	
Q124	8-729-117-32	s	TRANSISTOR 2SC4177	
Q125	8-729-140-63	s	TRANSISTOR 2SA1611-M5M6	
Q126	8-729-117-32	s	TRANSISTOR 2SC4177	
Q127	8-729-143-14	s	TRANSISTOR 2SC4176-B35	
Q128	8-729-140-63	s	TRANSISTOR 2SA1611-M5M6	
Q129	8-729-903-82	s	TRANSISTOR FMW2	
Q130	8-729-117-32	s	TRANSISTOR 2SC4177	
Q131	8-729-903-82	s	TRANSISTOR FMW2	
Q301	8-729-143-14	s	TRANSISTOR 2SC4176-B35	

(IO-149/149A BOARD; Suffix -11, 12)

Ref. No. or Q'ty	Part No.	SP	Description	
Q302	8-729-904-41	s	TRANSISTOR FMY3	
Q303	8-729-140-63	s	TRANSISTOR 2SA1611-M5M6	
Q304	8-729-140-63	s	TRANSISTOR 2SA1611-M5M6	
Q305	8-729-117-32	s	TRANSISTOR 2SC4177	
Q306	8-729-117-32	s	TRANSISTOR 2SC4177	
Q307	8-729-907-26	s	TRANSISTOR IMX1	
Q308	8-729-117-32	s	TRANSISTOR 2SC4177	
Q309	8-729-117-32	s	TRANSISTOR 2SC4177	
Q310	8-729-143-14	s	TRANSISTOR 2SC4176-B35	
Q311	8-729-117-32	s	TRANSISTOR 2SC4177	
Q312	8-729-907-26	s	TRANSISTOR IMX1	
Q313	8-729-140-63	s	TRANSISTOR 2SA1611-M5M6	
Q314	8-729-140-63	s	TRANSISTOR 2SA1611-M5M6	
Q315	8-729-117-32	s	TRANSISTOR 2SC4177	
Q316	8-729-140-63	s	TRANSISTOR 2SA1611-M5M6	
Q317	8-729-117-32	s	TRANSISTOR 2SC4177	
Q318	8-729-904-41	s	TRANSISTOR FMY3	
Q319	8-729-904-41	s	TRANSISTOR FMY3	
Q320	8-729-117-32	s	TRANSISTOR 2SC4177	
Q321	8-729-117-32	s	TRANSISTOR 2SC4177	
Q322	8-729-117-32	s	TRANSISTOR 2SC4177	
Q323	8-729-143-14	s	TRANSISTOR 2SC4176-B35	
Q324	8-729-140-63	s	TRANSISTOR 2SA1611-M5M6	
Q325	8-729-140-63	s	TRANSISTOR 2SA1611-M5M6	
Q326	8-729-117-32	s	TRANSISTOR 2SC4177	
Q327	8-729-117-32	s	TRANSISTOR 2SC4177	
Q328	8-729-117-32	s	TRANSISTOR 2SC4177	
Q329	8-729-117-32	s	TRANSISTOR 2SC4177	
Q330	8-729-117-32	s	TRANSISTOR 2SC4177	
Q331	8-729-904-41	s	TRANSISTOR FMY3	
Q332	8-729-422-44	s	TRANSISTOR 2SK663	
Q333	8-729-422-44	s	TRANSISTOR 2SK663	
Q334	8-729-422-44	s	TRANSISTOR 2SK663	
Q335	8-729-422-44	s	TRANSISTOR 2SK663	
Q336	8-729-140-63	s	TRANSISTOR 2SA1611-M5M6	
Q337	8-729-140-63	s	TRANSISTOR 2SA1611-M5M6	
Q338	8-729-140-63	s	TRANSISTOR 2SA1611-M5M6	
Q339	8-729-140-63	s	TRANSISTOR 2SA1611-M5M6	
Q340	8-729-117-32	s	TRANSISTOR 2SC4177	
Q341	8-729-907-26	s	TRANSISTOR IMX1	
Q342	8-729-907-26	s	TRANSISTOR IMX1	
Q343	8-729-117-32	s	TRANSISTOR 2SC4177	
Q344	8-729-117-32	s	TRANSISTOR 2SC4177	
Q345	8-729-907-26	s	TRANSISTOR IMX1	
Q346	8-729-117-32	s	TRANSISTOR 2SC4177	
Q347	8-729-907-26	s	TRANSISTOR IMX1	
Q348	8-729-117-32	s	TRANSISTOR 2SC4177	
Q349	8-729-140-63	s	TRANSISTOR 2SA1611-M5M6	
Q350	8-729-140-63	s	TRANSISTOR 2SA1611-M5M6	
Q501	8-729-117-32	s	TRANSISTOR 2SC4177	
Q502	8-729-117-32	s	TRANSISTOR 2SC4177	
Q503	8-729-117-32	s	TRANSISTOR 2SC4177	
Q504	8-729-117-32	s	TRANSISTOR 2SC4177	
Q505	8-729-117-32	s	TRANSISTOR 2SC4177	
Q506	8-729-904-41	s	TRANSISTOR FMY3	
Q507	8-729-117-32	s	TRANSISTOR 2SC4177	
Q508	8-729-117-32	s	TRANSISTOR 2SC4177	
Q509	8-729-117-32	s	TRANSISTOR 2SC4177	
Q601	8-729-140-47	s	TRANSISTOR 2SC3735-B34	

(IO-149/149A BOARD; Suffix -11, 12)

Ref. No. or Q'ty	Part No.	SP	Description	
Q602	8-729-140-47	s	TRANSISTOR 2SC3735-B34	
Q603	8-729-140-47	s	TRANSISTOR 2SC3735-B34	
Q604	8-729-140-47	s	TRANSISTOR 2SC3735-B34	
Q605	8-729-117-32	s	TRANSISTOR 2SC4177	
Q606	8-729-117-32	s	TRANSISTOR 2SC4177	
Q607	8-729-117-32	s	TRANSISTOR 2SC4177	
Q608	8-729-117-32	s	TRANSISTOR 2SC4177	
Q701	8-729-117-32	s	TRANSISTOR 2SC4177	
Q702	8-729-117-32	s	TRANSISTOR 2SC4177	
Q703	8-729-140-63	s	TRANSISTOR 2SA1611-M5M6	
Q704	8-729-027-38	s	TRANSISTOR DTA144EKA-T146	
Q705	8-729-027-59	s	TRANSISTOR DTC144EKA-T146	
Q706	8-729-904-41	s	TRANSISTOR FMY3	
Q707	8-729-117-32	s	TRANSISTOR 2SC4177	
Q708	8-729-117-32	s	TRANSISTOR 2SC4177	
Q709	8-729-904-04	s	TRANSISTOR FMS2	
Q710	8-729-117-32	s	TRANSISTOR 2SC4177	
Q711	8-729-117-32	s	TRANSISTOR 2SC4177	
Q712	8-729-140-63	s	TRANSISTOR 2SA1611-M5M6	
Q713	8-729-117-32	s	TRANSISTOR 2SC4177	
Q714	8-729-117-32	s	TRANSISTOR 2SC4177	
Q715	8-729-117-32	s	TRANSISTOR 2SC4177	
Q716	8-729-903-10	s	TRANSISTOR FMW1	[For NTSC]
Q717	8-729-117-32	s	TRANSISTOR 2SC4177	
Q718	8-729-907-26	s	TRANSISTOR IMX1	
Q719	8-729-903-82	s	TRANSISTOR FMW2	
Q720	8-729-907-26	s	TRANSISTOR IMX1	
Q721	8-729-903-82	s	TRANSISTOR FMW2	
Q722	8-729-117-32	s	TRANSISTOR 2SC4177	
Q723	8-729-117-32	s	TRANSISTOR 2SC4177	
Q724	8-729-117-32	s	TRANSISTOR 2SC4177	
Q725	8-729-117-32	s	TRANSISTOR 2SC4177	
Q726	8-729-117-32	s	TRANSISTOR 2SC4177	
Q727	8-729-140-63	s	TRANSISTOR 2SA1611-M5M6	
Q728	8-729-140-63	s	TRANSISTOR 2SA1611-M5M6	
Q729	8-729-140-63	s	TRANSISTOR 2SA1611-M5M6	
Q730	8-729-140-63	s	TRANSISTOR 2SA1611-M5M6	
Q731	8-729-117-32	s	TRANSISTOR 2SC4177	
Q732	8-729-140-63	s	TRANSISTOR 2SA1611-M5M6	
Q733	8-729-117-32	s	TRANSISTOR 2SC4177	
Q734	8-729-117-32	s	TRANSISTOR 2SC4177	
Q735	8-729-117-32	s	TRANSISTOR 2SC4177	
Q736	8-729-117-32	s	TRANSISTOR 2SC4177	
Q737	8-729-904-04	s	TRANSISTOR FMS2	
Q901	8-729-027-59	s	TRANSISTOR DTC144EKA-T146	
Q902	8-729-117-32	s	TRANSISTOR 2SC4177	
Q903	8-729-117-32	s	TRANSISTOR 2SC4177	
Q904	8-729-117-32	s	TRANSISTOR 2SC4177	
Q905	8-729-117-32	s	TRANSISTOR 2SC4177	
Q906	8-729-117-32	s	TRANSISTOR 2SC4177	
Q907	8-729-117-32	s	TRANSISTOR 2SC4177	
Q908	8-729-117-32	s	TRANSISTOR 2SC4177	
Q909	8-729-117-32	s	TRANSISTOR 2SC4177	
Q911	8-729-422-44	s	TRANSISTOR 2SK663	
Q912	8-729-422-44	s	TRANSISTOR 2SK663	
Q914	8-729-140-63	s	TRANSISTOR 2SA1611-M5M6	
Q915	8-729-422-44	s	TRANSISTOR 2SK663	
Q916	8-729-422-44	s	TRANSISTOR 2SK663	
Q917	8-729-117-32	s	TRANSISTOR 2SC4177	

(IO-149/149A BOARD; Suffix -11, 12)

Ref. No. or Q'ty	Part No.	SP	Description
Q918	8-729-140-63	s	TRANSISTOR 2SA1611-M5M6
Q919	8-729-117-32	s	TRANSISTOR 2SC4177
Q920	8-729-117-32	s	TRANSISTOR 2SC4177
Q921	8-729-117-32	s	TRANSISTOR 2SC4177
Q922	8-729-117-32	s	TRANSISTOR 2SC4177
Q923	8-729-117-32	s	TRANSISTOR 2SC4177
Q924	8-729-117-32	s	TRANSISTOR 2SC4177
Q925	8-729-117-32	s	TRANSISTOR 2SC4177
Q926	8-729-117-32	s	TRANSISTOR 2SC4177
Q927	8-729-140-63	s	TRANSISTOR 2SA1611-M5M6
Q1001	8-729-027-59	s	TRANSISTOR DTC144EKA-T146
Q1002	8-729-140-63	s	TRANSISTOR 2SA1611-M5M6
Q1003	8-729-117-32	s	TRANSISTOR 2SC4177
Q1004	8-729-117-32	s	TRANSISTOR 2SC4177
Q1005	8-729-117-32	s	TRANSISTOR 2SC4177
Q1006	8-729-140-63	s	TRANSISTOR 2SA1611-M5M6
Q1007	8-729-140-63	s	TRANSISTOR 2SA1611-M5M6
Q1008	8-729-117-32	s	TRANSISTOR 2SC4177
Q1009	8-729-117-32	s	TRANSISTOR 2SC4177
Q1010	8-729-140-63	s	TRANSISTOR 2SA1611-M5M6
Q1011	8-729-140-63	s	TRANSISTOR 2SA1611-M5M6
Q1012	8-729-027-59	s	TRANSISTOR DTC144EKA-T146
Q1013	8-729-140-63	s	TRANSISTOR 2SA1611-M5M6
Q1014	8-729-117-32	s	TRANSISTOR 2SC4177
Q1015	8-729-140-63	s	TRANSISTOR 2SA1611-M5M6
Q1016	8-729-140-63	s	TRANSISTOR 2SA1611-M5M6
Q1017	8-729-117-32	s	TRANSISTOR 2SC4177
Q1018	8-729-140-47	s	TRANSISTOR 2SC3735-B34
Q1019	8-729-117-32	s	TRANSISTOR 2SC4177
Q1020	8-729-143-07	s	TRANSISTOR 2SA1610-YY33
Q1021	8-729-117-32	s	TRANSISTOR 2SC4177
Q1022	8-729-143-07	s	TRANSISTOR 2SA1610-YY33
Q1023	8-729-117-32	s	TRANSISTOR 2SC4177
R101	1-216-672-11	s	METAL, CHIP 7.5k 0.5% 1/10W
R102	1-216-665-11	s	METAL, CHIP 3.9k 0.5% 1/10W
R103	1-216-667-11	s	METAL, CHIP 4.7k 0.5% 1/10W
R104	1-216-675-11	s	METAL, CHIP 10k 0.5% 1/10W
R105	1-216-041-00	s	METAL, CHIP 470 5% 1/10W
R106	1-216-295-91	s	RES, CHIP 0
R107	1-216-652-11	s	METAL, CHIP 1.1k 0.5% 1/10W
R108	1-216-668-11	s	METAL, CHIP 5.1k 0.5% 1/10W
R110	1-216-295-91	s	RES, CHIP 0
R112	1-216-295-91	s	RES, CHIP 0
R113	1-216-668-11	s	METAL, CHIP 5.1k 0.5% 1/10W
R114	1-216-665-11	s	METAL, CHIP 3.9k 0.5% 1/10W
R115	1-216-663-11	s	METAL, CHIP 3.3k 0.5% 1/10W
R116	1-216-073-00	s	METAL, CHIP 10k 5% 1/10W
R117	1-216-655-11	s	METAL, CHIP 1.5k 0.5% 1/10W
R118	1-216-657-11	s	METAL, CHIP 1.8k 0.5% 1/10W
R119	1-216-675-11	s	METAL, CHIP 10k 0.5% 1/10W
R120	1-216-675-11	s	METAL, CHIP 10k 0.5% 1/10W
R121	1-216-073-00	s	METAL, CHIP 10k 5% 1/10W
R122	1-216-073-00	s	METAL, CHIP 10k 5% 1/10W
R123	1-216-085-00	s	METAL, CHIP 33k 5% 1/10W
R124	1-216-085-00	s	METAL, CHIP 33k 5% 1/10W
R125	1-216-121-91	s	METAL, CHIP 1M 5% 1/10W
R126	1-216-121-91	s	METAL, CHIP 1M 5% 1/10W
R127	1-216-085-00	s	METAL, CHIP 33k 5% 1/10W

(IO-149/149A BOARD; Suffix -11, 12)

Ref. No. or Q'ty	Part No.	SP	Description
R128	1-216-085-00	s	METAL, CHIP 33k 5% 1/10W
R129	1-216-121-91	s	METAL, CHIP 1M 5% 1/10W
R130	1-216-121-91	s	METAL, CHIP 1M 5% 1/10W
R131	1-216-033-00	s	METAL, CHIP 220 5% 1/10W
R132	1-216-033-00	s	METAL, CHIP 220 5% 1/10W
R133	1-216-053-00	s	METAL, CHIP 1.5k 5% 1/10W
R134	1-216-053-00	s	METAL, CHIP 1.5k 5% 1/10W
R135	1-216-675-11	s	METAL, CHIP 10k 0.5% 1/10W
R136	1-216-073-00	s	METAL, CHIP 10k 5% 1/10W
R137	1-216-081-00	s	METAL, CHIP 22k 5% 1/10W
R138	1-216-121-91	s	METAL, CHIP 1M 5% 1/10W
R139	1-216-085-00	s	METAL, CHIP 33k 5% 1/10W
R140	1-216-121-91	s	METAL, CHIP 1M 5% 1/10W
R141	1-216-033-00	s	METAL, CHIP 220 5% 1/10W
R142	1-216-065-00	s	METAL, CHIP 4.7k 5% 1/10W[For NTSC]
R143	1-216-065-00	s	METAL, CHIP 4.7k 5% 1/10W[For NTSC]
R144	1-216-677-11	s	METAL, CHIP 12k 0.5% 1/10W
R145	1-216-678-11	s	METAL, CHIP 13k 0.5% 1/10W
R146	1-216-678-11	s	METAL, CHIP 13k 0.5% 1/10W
R147	1-216-667-11	s	METAL, CHIP 4.7k 0.5% 1/10W
R148	1-216-678-11	s	METAL, CHIP 13k 0.5% 1/10W
R149	1-216-659-11	s	METAL, CHIP 2.2k 0.5% 1/10W
R150	1-216-673-11	s	METAL, CHIP 8.2k 0.5% 1/10W
R151	1-216-659-11	s	METAL, CHIP 2.2k 0.5% 1/10W
R152	1-216-661-11	s	METAL, CHIP 2.7k 0.5% 1/10W
R153	1-216-661-11	s	METAL, CHIP 2.7k 0.5% 1/10W
R154	1-216-085-00	s	METAL, CHIP 33k 5% 1/10W
R155	1-216-675-11	s	METAL, CHIP 10k 0.5% 1/10W
R156	1-216-675-11	s	METAL, CHIP 10k 0.5% 1/10W
R157	1-216-679-11	s	METAL, CHIP 15k 0.5% 1/10W
R158	1-216-679-11	s	METAL, CHIP 15k 0.5% 1/10W
R159	1-216-659-11	s	METAL, CHIP 2.2k 0.5% 1/10W
R160	1-216-679-11	s	METAL, CHIP 15k 0.5% 1/10W
R161	1-216-679-11	s	METAL, CHIP 15k 0.5% 1/10W
R162	1-216-661-11	s	METAL, CHIP 2.7k 0.5% 1/10W
R163	1-216-679-11	s	METAL, CHIP 15k 0.5% 1/10W
R164	1-216-671-11	s	METAL, CHIP 6.8k 0.5% 1/10W
R165	1-216-671-11	s	METAL, CHIP 6.8k 0.5% 1/10W
R166	1-216-679-11	s	METAL, CHIP 15k 0.5% 1/10W
R167	1-216-663-11	s	METAL, CHIP 3.3k 0.5% 1/10W
R168	1-216-659-11	s	METAL, CHIP 2.2k 0.5% 1/10W
R169	1-216-081-00	s	METAL, CHIP 22k 5% 1/10W
R170	1-216-081-00	s	METAL, CHIP 22k 5% 1/10W
R171	1-216-081-00	s	METAL, CHIP 22k 5% 1/10W
R172	1-216-645-11	s	METAL, CHIP 560 0.5% 1/10W
R173	1-216-665-11	s	METAL, CHIP 3.9k 0.5% 1/10W
R174	1-216-665-11	s	METAL, CHIP 3.9k 0.5% 1/10W
R175	1-216-089-91	s	METAL, CHIP 47k 5% 1/10W
R176	1-216-667-11	s	METAL, CHIP 4.7k 0.5% 1/10W
R177	1-216-089-91	s	METAL, CHIP 47k 5% 1/10W
R178	1-216-089-91	s	METAL, CHIP 47k 5% 1/10W
R179	1-216-639-11	s	METAL, CHIP 330 0.5% 1/10W
R180	1-216-639-11	s	METAL, CHIP 330 0.5% 1/10W
R181	1-216-639-11	s	METAL, CHIP 330 0.5% 1/10W
R182	1-216-639-11	s	METAL, CHIP 330 0.5% 1/10W
R183	1-216-639-11	s	METAL, CHIP 330 0.5% 1/10W
R184	1-216-639-11	s	METAL, CHIP 330 0.5% 1/10W
R185	1-216-045-00	s	METAL, CHIP 680 5% 1/10W
R186	1-216-045-00	s	METAL, CHIP 680 5% 1/10W

(IO-149/149A BOARD; Suffix -11, 12)

Ref. No. or Q'ty	Part No.	SP	Description
R187	1-216-017-91	s	METAL, CHIP 47 5% 1/10W
R188	1-216-017-91	s	METAL, CHIP 47 5% 1/10W
R189	1-216-045-00	s	METAL, CHIP 680 5% 1/10W
R190	1-216-017-91	s	METAL, CHIP 47 5% 1/10W
R191	1-216-017-91	s	METAL, CHIP 47 5% 1/10W
R192	1-216-017-91	s	METAL, CHIP 47 5% 1/10W
R193	1-216-017-91	s	METAL, CHIP 47 5% 1/10W
R194	1-216-057-00	s	METAL, CHIP 2.2k 5% 1/10W
R195	1-216-057-00	s	METAL, CHIP 2.2k 5% 1/10W
R196	1-216-057-00	s	METAL, CHIP 2.2k 5% 1/10W
R197	1-216-049-91	s	METAL, CHIP 1k 5% 1/10W
R198	1-216-049-91	s	METAL, CHIP 1k 5% 1/10W
R199	1-216-049-91	s	METAL, CHIP 1k 5% 1/10W
R200	1-216-049-91	s	METAL, CHIP 1k 5% 1/10W
R201	1-216-049-91	s	METAL, CHIP 1k 5% 1/10W
R202	1-216-049-91	s	METAL, CHIP 1k 5% 1/10W
R203	1-216-057-00	s	METAL, CHIP 2.2k 5% 1/10W
R204	1-216-057-00	s	METAL, CHIP 2.2k 5% 1/10W
R205	1-216-057-00	s	METAL, CHIP 2.2k 5% 1/10W
R206	1-216-033-00	s	METAL, CHIP 220 5% 1/10W
R207	1-216-033-00	s	METAL, CHIP 220 5% 1/10W
R208	1-216-033-00	s	METAL, CHIP 220 5% 1/10W
R209	1-216-045-00	s	METAL, CHIP 680 5% 1/10W
R210	1-216-045-00	s	METAL, CHIP 680 5% 1/10W
R211	1-216-045-00	s	METAL, CHIP 680 5% 1/10W
R212	1-216-077-00	s	METAL, CHIP 15k 5% 1/10W
R213	1-216-077-00	s	METAL, CHIP 15k 5% 1/10W
R214	1-216-077-00	s	METAL, CHIP 15k 5% 1/10W
R215	1-216-027-00	s	METAL, CHIP 120 5% 1/10W
R216	1-216-027-00	s	METAL, CHIP 120 5% 1/10W
R217	1-216-027-00	s	METAL, CHIP 120 5% 1/10W
R218	1-216-045-00	s	METAL, CHIP 680 5% 1/10W [For NTSC]
R219	1-216-045-00	s	METAL, CHIP 680 5% 1/10W [For NTSC]
R220	1-216-295-91	s	RES, CHIP 0
R221	1-216-017-91	s	METAL, CHIP 47 5% 1/10W
R222	1-216-017-91	s	METAL, CHIP 47 5% 1/10W
R223	1-216-017-91	s	METAL, CHIP 47 5% 1/10W
R224	1-216-651-11	s	METAL, CHIP 1k 0.5% 1/10W
R225	1-216-659-11	s	METAL, CHIP 2.2k 0.5% 1/10W
R226	1-216-651-11	s	METAL, CHIP 1k 0.5% 1/10W
R227	1-216-659-11	s	METAL, CHIP 2.2k 0.5% 1/10W
R228	1-216-049-91	s	METAL, CHIP 1k 5% 1/10W
R229	1-216-659-11	s	METAL, CHIP 2.2k 0.5% 1/10W
R230	1-216-651-11	s	METAL, CHIP 1k 0.5% 1/10W
R231	1-216-121-91	s	METAL, CHIP 1M 5% 1/10W
R232	1-216-049-91	s	METAL, CHIP 1k 5% 1/10W
R233	1-216-049-91	s	METAL, CHIP 1k 5% 1/10W
R234	1-216-121-91	s	METAL, CHIP 1M 5% 1/10W
R235	1-216-121-91	s	METAL, CHIP 1M 5% 1/10W
R236	1-216-049-91	s	METAL, CHIP 1k 5% 1/10W
R237	1-216-049-91	s	METAL, CHIP 1k 5% 1/10W
R238	1-216-049-91	s	METAL, CHIP 1k 5% 1/10W
R239	1-216-049-91	s	METAL, CHIP 1k 5% 1/10W
R240	1-216-049-91	s	METAL, CHIP 1k 5% 1/10W
R241	1-216-089-91	s	METAL, CHIP 47k 5% 1/10W
R242	1-216-049-91	s	METAL, CHIP 1k 5% 1/10W
R243	1-216-089-91	s	METAL, CHIP 47k 5% 1/10W
R244	1-216-073-00	s	METAL, CHIP 10k 5% 1/10W
R245	1-216-649-11	s	METAL, CHIP 820 0.5% 1/10W

(IO-149/149A BOARD; Suffix -11, 12)

Ref. No. or Q'ty	Part No.	SP	Description
R246	1-216-057-00	s	METAL, CHIP 2.2k 5% 1/10W
R247	1-216-651-11	s	METAL, CHIP 1k 0.5% 1/10W
R248	1-216-057-00	s	METAL, CHIP 2.2k 5% 1/10W
R249	1-216-643-11	s	METAL, CHIP 470 0.5% 1/10W
R250	1-216-639-11	s	METAL, CHIP 330 0.5% 1/10W
R251	1-216-643-11	s	METAL, CHIP 470 0.5% 1/10W
R252	1-216-677-11	s	METAL, CHIP 12k 0.5% 1/10W
R253	1-216-683-11	s	METAL, CHIP 22k 0.5% 1/10W
R254	1-216-681-11	s	METAL, CHIP 18k 0.5% 1/10W
R255	1-216-683-11	s	METAL, CHIP 22k 0.5% 1/10W
R256	1-216-097-91	s	METAL, CHIP 100k 5% 1/10W
R257	1-216-089-91	s	METAL, CHIP 47k 5% 1/10W
R258	1-216-295-91	s	RES, CHIP 0
R259	1-216-668-11	s	METAL, CHIP 5.1k 0.5% 1/10W [For NTSC]
R259	1-216-675-11	s	METAL, CHIP 10k 0.5% 1/10W[For PAL]
R260	1-216-073-00	s	METAL, CHIP 10k 5% 1/10W
R261	1-216-049-91	s	METAL, CHIP 1k 5% 1/10W
R262	1-216-687-11	s	METAL, CHIP 33k 0.5% 1/10W [For NTSC]
R262	1-216-682-11	s	METAL, CHIP 20k 0.5% 1/10W[For PAL]
R263	1-216-065-00	s	METAL, CHIP 4.7k 5% 1/10W
R264	1-216-065-00	s	METAL, CHIP 4.7k 5% 1/10W
R265	1-216-049-91	s	METAL, CHIP 1k 5% 1/10W
R266	1-216-049-91	s	METAL, CHIP 1k 5% 1/10W
R267	1-216-049-91	s	METAL, CHIP 1k 5% 1/10W
R268	1-216-049-91	s	METAL, CHIP 1k 5% 1/10W
R269	1-216-057-00	s	METAL, CHIP 2.2k 5% 1/10W
R270	1-216-647-11	s	METAL, CHIP 680 0.5% 1/10W
R271	1-216-081-00	s	METAL, CHIP 22k 5% 1/10W
R272	1-216-666-11	s	METAL, CHIP 4.3k 0.5% 1/10W
R273	1-216-651-11	s	METAL, CHIP 1k 0.5% 1/10W [For PAL]
R274	1-216-661-11	s	METAL, CHIP 2.7k 0.5% 1/10W
R275	1-216-057-00	s	METAL, CHIP 2.2k 5% 1/10W
R276	1-216-049-91	s	METAL, CHIP 1k 5% 1/10W
R277	1-216-081-00	s	METAL, CHIP 22k 5% 1/10W
R278	1-216-025-91	s	METAL, CHIP 100 5% 1/10W
R279	1-216-017-91	s	METAL, CHIP 47 5% 1/10W
R280	1-216-657-11	s	METAL, CHIP 1.8k 0.5% 1/10W
R281	1-216-073-00	s	METAL, CHIP 10k 5% 1/10W
R282	1-216-097-91	s	METAL, CHIP 100k 5% 1/10W[For NTSC]
R282	1-216-105-91	s	METAL, CHIP 220k 5% 1/10W [For PAL]
R301	1-216-065-00	s	METAL, CHIP 4.7k 5% 1/10W
R302	1-216-025-91	s	METAL, CHIP 100 5% 1/10W
R303	1-216-065-00	s	METAL, CHIP 4.7k 5% 1/10W
R304	1-216-049-91	s	METAL, CHIP 1k 5% 1/10W
R305	1-216-049-91	s	METAL, CHIP 1k 5% 1/10W
R306	1-216-033-00	s	METAL, CHIP 220 5% 1/10W
R307	1-216-057-00	s	METAL, CHIP 2.2k 5% 1/10W
R308	1-216-057-00	s	METAL, CHIP 2.2k 5% 1/10W
R309	1-216-049-91	s	METAL, CHIP 1k 5% 1/10W
R310	1-216-049-91	s	METAL, CHIP 1k 5% 1/10W
R311	1-216-659-11	s	METAL, CHIP 2.2k 0.5% 1/10W
R312	1-216-627-11	s	METAL, CHIP 100 0.5% 1/10W
R313	1-216-295-91	s	RES, CHIP 0
R314	1-216-661-11	s	METAL, CHIP 2.7k 0.5% 1/10W
R315	1-216-065-00	s	METAL, CHIP 4.7k 5% 1/10W

(IO-149/149A BOARD; Suffix -11, 12)

Ref. No. or Q'ty	Part No.	SP	Description
R316	1-216-025-91	s	METAL, CHIP 100 5% 1/10W
R317	1-216-647-11	s	METAL, CHIP 680 0.5% 1/10W
R318	1-216-017-91	s	METAL, CHIP 47 5% 1/10W
R319	1-216-657-11	s	METAL, CHIP 1.8k 0.5% 1/10W
R320	1-216-065-00	s	METAL, CHIP 4.7k 5% 1/10W
R321	1-216-025-91	s	METAL, CHIP 100 5% 1/10W
R322	1-216-643-11	s	METAL, CHIP 470 0.5% 1/10W
R323	1-216-653-11	s	METAL, CHIP 1.2k 0.5% 1/10W
R324	1-216-643-11	s	METAL, CHIP 470 0.5% 1/10W
R325	1-216-643-11	s	METAL, CHIP 470 0.5% 1/10W
R326	1-216-647-11	s	METAL, CHIP 680 0.5% 1/10W
R327	1-216-065-00	s	METAL, CHIP 4.7k 5% 1/10W
R328	1-216-639-11	s	METAL, CHIP 330 0.5% 1/10W
R329	1-216-049-91	s	METAL, CHIP 1k 5% 1/10W
R330	1-216-033-00	s	METAL, CHIP 220 5% 1/10W
R331	1-216-049-91	s	METAL, CHIP 1k 5% 1/10W
R332	1-216-049-91	s	METAL, CHIP 1k 5% 1/10W
R333	1-216-049-91	s	METAL, CHIP 1k 5% 1/10W
R336	1-216-061-00	s	METAL, CHIP 3.3k 5% 1/10W
R337	1-216-683-11	s	METAL, CHIP 22k 0.5% 1/10W
R338	1-216-667-11	s	METAL, CHIP 4.7k 0.5% 1/10W
R339	1-216-049-91	s	METAL, CHIP 1k 5% 1/10W
R340	1-216-643-11	s	METAL, CHIP 470 0.5% 1/10W
R341	1-216-643-11	s	METAL, CHIP 470 0.5% 1/10W
R342	1-216-651-11	s	METAL, CHIP 1k 0.5% 1/10W
R343	1-216-053-00	s	METAL, CHIP 1.5k 5% 1/10W
R344	1-216-025-91	s	METAL, CHIP 100 5% 1/10W
R345	1-216-643-11	s	METAL, CHIP 470 0.5% 1/10W
R346	1-216-077-00	s	METAL, CHIP 15k 5% 1/10W
R347	1-216-057-00	s	METAL, CHIP 2.2k 5% 1/10W
R348	1-216-655-11	s	METAL, CHIP 1.5k 0.5% 1/10W
R349	1-216-025-91	s	METAL, CHIP 100 5% 1/10W
R350	1-216-643-11	s	METAL, CHIP 470 0.5% 1/10W
R351	1-216-057-00	s	METAL, CHIP 2.2k 5% 1/10W
R352	1-216-634-11	s	METAL, CHIP 200 0.5% 1/10W
R354	1-216-057-00	s	METAL, CHIP 2.2k 5% 1/10W
R357	1-216-655-11	s	METAL, CHIP 1.5k 0.5% 1/10W
R359	1-216-057-00	s	METAL, CHIP 2.2k 5% 1/10W
R361	1-216-651-11	s	METAL, CHIP 1k 0.5% 1/10W
R362	1-216-025-91	s	METAL, CHIP 100 5% 1/10W
R363	1-216-025-91	s	METAL, CHIP 100 5% 1/10W
R364	1-216-049-91	s	METAL, CHIP 1k 5% 1/10W
R365	1-216-025-91	s	METAL, CHIP 100 5% 1/10W
R366	1-216-651-11	s	METAL, CHIP 1k 0.5% 1/10W
R367	1-216-653-11	s	METAL, CHIP 1.2k 0.5% 1/10W
R368	1-216-049-91	s	METAL, CHIP 1k 5% 1/10W
R369	1-216-049-91	s	METAL, CHIP 1k 5% 1/10W
R370	1-216-651-11	s	METAL, CHIP 1k 0.5% 1/10W
R371	1-216-057-00	s	METAL, CHIP 2.2k 5% 1/10W
R372	1-216-049-91	s	METAL, CHIP 1k 5% 1/10W
R373	1-216-049-91	s	METAL, CHIP 1k 5% 1/10W
R374	1-216-653-11	s	METAL, CHIP 1.2k 0.5% 1/10W
R375	1-216-653-11	s	METAL, CHIP 1.2k 0.5% 1/10W
R376	1-216-049-91	s	METAL, CHIP 1k 5% 1/10W
R377	1-216-049-91	s	METAL, CHIP 1k 5% 1/10W
R378	1-216-065-00	s	METAL, CHIP 4.7k 5% 1/10W
R379	1-216-025-91	s	METAL, CHIP 100 5% 1/10W
R380	1-216-065-00	s	METAL, CHIP 4.7k 5% 1/10W
R381	1-216-025-91	s	METAL, CHIP 100 5% 1/10W

(IO-149/149A BOARD; Suffix -11, 12)

Ref. No. or Q'ty	Part No.	SP	Description
R382	1-216-053-00	s	METAL, CHIP 1.5k 5% 1/10W
R383	1-216-049-91	s	METAL, CHIP 1k 5% 1/10W
R384	1-216-049-91	s	METAL, CHIP 1k 5% 1/10W
R385	1-216-049-91	s	METAL, CHIP 1k 5% 1/10W
R386	1-216-049-91	s	METAL, CHIP 1k 5% 1/10W
R387	1-216-049-91	s	METAL, CHIP 1k 5% 1/10W
R388	1-216-049-91	s	METAL, CHIP 1k 5% 1/10W
R389	1-216-639-11	s	METAL, CHIP 330 0.5% 1/10W
R390	1-216-639-11	s	METAL, CHIP 330 0.5% 1/10W
R391	1-216-057-00	s	METAL, CHIP 2.2k 5% 1/10W
R392	1-216-041-00	s	METAL, CHIP 470 5% 1/10W
R393	1-216-057-00	s	METAL, CHIP 2.2k 5% 1/10W
R394	1-216-025-91	s	METAL, CHIP 100 5% 1/10W
R395	1-216-025-91	s	METAL, CHIP 100 5% 1/10W
R396	1-216-025-91	s	METAL, CHIP 100 5% 1/10W
R397	1-216-025-91	s	METAL, CHIP 100 5% 1/10W
R398	1-216-055-00	s	METAL, CHIP 1.8k 5% 1/10W
R399	1-216-065-00	s	METAL, CHIP 4.7k 5% 1/10W
R400	1-216-065-00	s	METAL, CHIP 4.7k 5% 1/10W
R401	1-216-065-00	s	METAL, CHIP 4.7k 5% 1/10W
R402	1-216-065-00	s	METAL, CHIP 4.7k 5% 1/10W
R403	1-216-669-11	s	METAL, CHIP 5.6k 0.5% 1/10W
R404	1-216-659-11	s	METAL, CHIP 2.2k 0.5% 1/10W
R405	1-216-113-00	s	METAL, CHIP 470k 5% 1/10W
R406	1-216-049-91	s	METAL, CHIP 1k 5% 1/10W
R407	1-216-049-91	s	METAL, CHIP 1k 5% 1/10W
R408	1-216-049-91	s	METAL, CHIP 1k 5% 1/10W
R409	1-216-057-00	s	METAL, CHIP 2.2k 5% 1/10W
R410	1-216-669-11	s	METAL, CHIP 5.6k 0.5% 1/10W
R411	1-216-659-11	s	METAL, CHIP 2.2k 0.5% 1/10W
R412	1-216-055-00	s	METAL, CHIP 1.8k 5% 1/10W
R413	1-216-057-00	s	METAL, CHIP 2.2k 5% 1/10W
R414	1-216-017-91	s	METAL, CHIP 47 5% 1/10W
R415	1-216-017-91	s	METAL, CHIP 47 5% 1/10W
R416	1-216-073-00	s	METAL, CHIP 10k 5% 1/10W
R417	1-216-643-11	s	METAL, CHIP 470 0.5% 1/10W
R418	1-216-643-11	s	METAL, CHIP 470 0.5% 1/10W
R419	1-216-653-11	s	METAL, CHIP 1.2k 0.5% 1/10W
R420	1-216-643-11	s	METAL, CHIP 470 0.5% 1/10W
R421	1-216-041-00	s	METAL, CHIP 470 5% 1/10W
R422	1-216-653-11	s	METAL, CHIP 1.2k 0.5% 1/10W
R423	1-216-643-11	s	METAL, CHIP 470 0.5% 1/10W
R424	1-216-643-11	s	METAL, CHIP 470 0.5% 1/10W
R425	1-216-663-11	s	METAL, CHIP 3.3k 0.5% 1/10W
R426	1-216-663-11	s	METAL, CHIP 3.3k 0.5% 1/10W
R427	1-216-053-00	s	METAL, CHIP 1.5k 5% 1/10W
R428	1-216-651-11	s	METAL, CHIP 1k 0.5% 1/10W
R429	1-216-639-11	s	METAL, CHIP 330 0.5% 1/10W
R430	1-216-651-11	s	METAL, CHIP 1k 0.5% 1/10W
R431	1-216-639-11	s	METAL, CHIP 330 0.5% 1/10W
R432	1-216-065-00	s	METAL, CHIP 4.7k 5% 1/10W
R433	1-216-065-00	s	METAL, CHIP 4.7k 5% 1/10W
R434	1-216-651-11	s	METAL, CHIP 1k 0.5% 1/10W [For NTSC]
R434	1-216-656-11	s	METAL, CHIP 1.6k 0.5% 1/10W [For PAL]
R435	1-216-660-11	s	METAL, CHIP 2.4k 0.5% 1/10W [For NTSC]

(IO-149/149A BOARD; Suffix -11, 12)

Ref. No. or Q'ty	Part No.	SP	Description
R435	1-216-657-11	s	METAL, CHIP 1.8k 0.5% 1/10W [For PAL]
R436	1-216-049-91	s	METAL, CHIP 1k 5% 1/10W
R437	1-216-081-00	s	METAL, CHIP 22k 5% 1/10W
R438	1-216-653-11	s	METAL, CHIP 1.2k 0.5% 1/10W
R439	1-216-667-11	s	METAL, CHIP 4.7k 0.5% 1/10W
R440	1-216-651-11	s	METAL, CHIP 1k 0.5% 1/10W
R441	1-216-624-11	s	METAL, CHIP 75 0.5% 1/10W
R442	1-216-624-11	s	METAL, CHIP 75 0.5% 1/10W
R443	1-216-624-11	s	METAL, CHIP 75 0.5% 1/10W
R444	1-216-646-11	s	METAL, CHIP 620 0.5% 1/10W
R445	1-216-045-00	s	METAL, CHIP 680 5% 1/10W
R446	1-216-041-00	s	METAL, CHIP 470 5% 1/10W
R447	1-216-651-11	s	METAL, CHIP 1k 0.5% 1/10W[For NTSC]
R447	1-216-656-11	s	METAL, CHIP 1.6k 0.5% 1/10W [For PAL]
R448	1-216-041-00	s	METAL, CHIP 470 5% 1/10W
R449	1-216-660-11	s	METAL, CHIP 2.4k 0.5% 1/10W [For NTSC]
R449	1-216-657-11	s	METAL, CHIP 1.8k 0.5% 1/10W [For PAL]
R450	1-216-624-11	s	METAL, CHIP 75 0.5% 1/10W
R451	1-216-097-91	s	METAL, CHIP 100k 5% 1/10W
R452	1-216-073-00	s	METAL, CHIP 10k 5% 1/10W
R453	1-216-081-00	s	METAL, CHIP 22k 5% 1/10W
R454	1-216-095-00	s	METAL, CHIP 82k 5% 1/10W
R455	1-216-073-00	s	METAL, CHIP 10k 5% 1/10W
R456	1-216-624-11	s	METAL, CHIP 75 0.5% 1/10W
R457	1-216-624-11	s	METAL, CHIP 75 0.5% 1/10W
R458	1-216-675-11	s	METAL, CHIP 10k 0.5% 1/10W
R459	1-216-624-11	s	METAL, CHIP 75 0.5% 1/10W
R501	1-216-089-91	s	METAL, CHIP 47k 5% 1/10W
R502	1-216-683-11	s	METAL, CHIP 22k 0.5% 1/10W
R503	1-216-659-11	s	METAL, CHIP 2.2k 0.5% 1/10W [For NTSC]
R503	1-216-655-11	s	METAL, CHIP 1.5k 0.5% 1/10W [For PAL]
R504	1-216-675-11	s	METAL, CHIP 10k 0.5% 1/10W
R505	1-216-675-11	s	METAL, CHIP 10k 0.5% 1/10W
R506	1-216-659-11	s	METAL, CHIP 2.2k 0.5% 1/10W [For NTSC]
R507	1-216-295-91	s	RES, CHIP 0 [For NTSC]
R507	1-216-655-11	s	METAL, CHIP 1.5k 0.5% 1/10W [For PAL]
R508	1-216-073-00	s	METAL, CHIP 10k 5% 1/10W
R509	1-216-669-11	s	METAL, CHIP 5.6k 0.5% 1/10W
R510	1-216-675-11	s	METAL, CHIP 10k 0.5% 1/10W
R511	1-216-663-11	s	METAL, CHIP 3.3k 0.5% 1/10W [For NTSC]

(IO-149/149A BOARD; Suffix -11, 12)

Ref. No. or Q'ty	Part No.	SP	Description
R511	1-216-667-11	s	METAL, CHIP 4.7k 0.5% 1/10W [For PAL]
R512	1-216-671-11	s	METAL, CHIP 6.8k 0.5% 1/10W [For NTSC]
R513	1-216-677-11	s	METAL, CHIP 12k 0.5% 1/10W
R515	1-216-057-00	s	METAL, CHIP 2.2k 5% 1/10W
R516	1-216-691-11	s	METAL, CHIP 47k 0.5% 1/10W
R517	1-216-677-11	s	METAL, CHIP 12k 0.5% 1/10W
R518	1-216-679-11	s	METAL, CHIP 15k 0.5% 1/10W
R519	1-216-671-11	s	METAL, CHIP 6.8k 0.5% 1/10W
R520	1-216-679-11	s	METAL, CHIP 15k 0.5% 1/10W
R521	1-216-089-91	s	METAL, CHIP 47k 5% 1/10W
R522	1-216-097-91	s	METAL, CHIP 100k 5% 1/10W
R523	1-216-089-91	s	METAL, CHIP 47k 5% 1/10W
R524	1-216-675-11	s	METAL, CHIP 10k 0.5% 1/10W
R525	1-216-651-11	s	METAL, CHIP 1k 0.5% 1/10W
R526	1-216-675-11	s	METAL, CHIP 10k 0.5% 1/10W
R527	1-216-665-11	s	METAL, CHIP 3.9k 0.5% 1/10W
R528	1-216-677-11	s	METAL, CHIP 12k 0.5% 1/10W
R529	1-216-049-91	s	METAL, CHIP 1k 5% 1/10W
R530	1-216-065-00	s	METAL, CHIP 4.7k 5% 1/10W
R531	1-216-049-91	s	METAL, CHIP 1k 5% 1/10W
R532	1-216-049-91	s	METAL, CHIP 1k 5% 1/10W
R533	1-216-677-11	s	METAL, CHIP 12k 0.5% 1/10W
R534	1-216-051-00	s	METAL, CHIP 1.2k 5% 1/10W
R535	1-216-675-11	s	METAL, CHIP 10k 0.5% 1/10W
R536	1-216-059-00	s	METAL, CHIP 2.7k 5% 1/10W
R537	1-216-643-11	s	METAL, CHIP 470 0.5% 1/10W
R538	1-216-679-11	s	METAL, CHIP 15k 0.5% 1/10W
R539	1-216-049-91	s	METAL, CHIP 1k 5% 1/10W
R540	1-216-057-00	s	METAL, CHIP 2.2k 5% 1/10W
R541	1-216-651-11	s	METAL, CHIP 1k 0.5% 1/10W
R542	1-216-057-00	s	METAL, CHIP 2.2k 5% 1/10W
R543	1-216-073-00	s	METAL, CHIP 10k 5% 1/10W
R544	1-216-651-11	s	METAL, CHIP 1k 0.5% 1/10W
R545	1-216-683-11	s	METAL, CHIP 22k 0.5% 1/10W
R546	1-216-057-00	s	METAL, CHIP 2.2k 5% 1/10W
R547	1-216-017-91	s	METAL, CHIP 47 5% 1/10W
R548	1-216-683-11	s	METAL, CHIP 22k 0.5% 1/10W
R549	1-216-666-11	s	METAL, CHIP 4.3k 0.5% 1/10W
R550	1-216-655-11	s	METAL, CHIP 1.5k 0.5% 1/10W
R551	1-216-097-91	s	METAL, CHIP 100k 5% 1/10W
R552	1-216-059-00	s	METAL, CHIP 2.7k 5% 1/10W
R553	1-216-671-11	s	METAL, CHIP 6.8k 0.5% 1/10W
R554	1-216-655-11	s	METAL, CHIP 1.5k 0.5% 1/10W
R555	1-216-059-00	s	METAL, CHIP 2.7k 5% 1/10W
R556	1-216-073-00	s	METAL, CHIP 10k 5% 1/10W
R557	1-216-683-11	s	METAL, CHIP 22k 0.5% 1/10W
R558	1-216-017-91	s	METAL, CHIP 47 5% 1/10W
R559	1-216-687-11	s	METAL, CHIP 33k 0.5% 1/10W
R560	1-216-679-11	s	METAL, CHIP 15k 0.5% 1/10W
R561	1-216-683-11	s	METAL, CHIP 22k 0.5% 1/10W
R562	1-216-069-00	s	METAL, CHIP 6.8k 5% 1/10W
R563	1-216-687-11	s	METAL, CHIP 33k 0.5% 1/10W
R564	1-216-687-11	s	METAL, CHIP 33k 0.5% 1/10W
R565	1-216-047-91	s	METAL, CHIP 820 5% 1/10W

(IO-149/149A BOARD; Suffix -11, 12)

Ref. No. or Q'ty	Part No.	SP	Description
R566	1-216-049-91	s	METAL, CHIP 1k 5% 1/10W
R567	1-216-691-11	s	METAL, CHIP 47k 0.5% 1/10W
R568	1-216-025-91	s	METAL, CHIP 100 5% 1/10W
R569	1-216-041-00	s	METAL, CHIP 470 5% 1/10W
R570	1-216-669-11	s	METAL, CHIP 5.6k 0.5% 1/10W
R571	1-216-081-00	s	METAL, CHIP 22k 5% 1/10W
R572	1-216-049-91	s	METAL, CHIP 1k 5% 1/10W
R573	1-216-059-00	s	METAL, CHIP 2.7k 5% 1/10W
R574	1-216-681-11	s	METAL, CHIP 18k 0.5% 1/10W
R575	1-216-041-00	s	METAL, CHIP 470 5% 1/10W
R576	1-216-624-11	s	METAL, CHIP 75 0.5% 1/10W
R577	1-216-687-11	s	METAL, CHIP 33k 0.5% 1/10W
R579	1-218-772-11	s	METAL, CHIP 680k 0.5% 1/10W
R580	1-216-017-91	s	METAL, CHIP 47 5% 1/10W
R581	1-216-025-91	s	METAL, CHIP 100 5% 1/10W
R582	1-216-061-00	s	METAL, CHIP 3.3k 5% 1/10W
R583	1-216-097-91	s	METAL, CHIP 100k 5% 1/10W
R584	1-216-017-91	s	METAL, CHIP 47 5% 1/10W
R585	1-216-049-91	s	METAL, CHIP 1k 5% 1/10W
R586	1-216-049-91	s	METAL, CHIP 1k 5% 1/10W
R587	1-216-049-91	s	METAL, CHIP 1k 5% 1/10W
R588	1-216-093-00	s	METAL, CHIP 68k 5% 1/10W
R589	1-216-049-91	s	METAL, CHIP 1k 5% 1/10W
R590	1-216-666-11	s	METAL, CHIP 4.3k 0.5% 1/10W
R591	1-216-045-00	s	METAL, CHIP 680 5% 1/10W
R592	1-216-081-00	s	METAL, CHIP 22k 5% 1/10W
R593	1-216-673-11	s	METAL, CHIP 8.2k 0.5% 1/10W
R594	1-216-025-91	s	METAL, CHIP 100 5% 1/10W
R595	1-216-025-91	s	METAL, CHIP 100 5% 1/10W
R596	1-216-643-11	s	METAL, CHIP 470 0.5% 1/10W
R597	1-216-643-11	s	METAL, CHIP 470 0.5% 1/10W
R601	1-216-089-91	s	METAL, CHIP 47k 5% 1/10W
R602	1-216-097-91	s	METAL, CHIP 100k 5% 1/10W[For NTSC]
R603	1-216-295-91	s	RES, CHIP 0 [For PAL]
R604	1-216-097-91	s	METAL, CHIP 100k 5% 1/10W[For NTSC]
R605	1-216-295-91	s	RES, CHIP 0 [For PAL]
R606	1-216-073-00	s	METAL, CHIP 10k 5% 1/10W
R607	1-216-065-00	s	METAL, CHIP 4.7k 5% 1/10W
R608	1-216-017-91	s	METAL, CHIP 47 5% 1/10W
R609	1-216-295-91	s	RES, CHIP 0
R610	1-216-049-91	s	METAL, CHIP 1k 5% 1/10W
R612	1-216-085-00	s	METAL, CHIP 33k 5% 1/10W
R613	1-216-065-00	s	METAL, CHIP 4.7k 5% 1/10W[For NTSC]
R614	1-216-073-00	s	METAL, CHIP 10k 5% 1/10W
R615	1-216-065-00	s	METAL, CHIP 4.7k 5% 1/10W [For PAL]
R616	1-216-017-91	s	METAL, CHIP 47 5% 1/10W
R617	1-216-085-00	s	METAL, CHIP 33k 5% 1/10W
R618	1-216-085-00	s	METAL, CHIP 33k 5% 1/10W
R619	1-216-658-11	s	METAL, CHIP 2k 0.5% 1/10W
R620	1-216-051-00	s	METAL, CHIP 1.2k 5% 1/10W
R621	1-216-658-11	s	METAL, CHIP 2k 0.5% 1/10W
R622	1-216-051-00	s	METAL, CHIP 1.2k 5% 1/10W
R623	1-216-643-11	s	METAL, CHIP 470 0.5% 1/10W
R624	1-216-037-00	s	METAL, CHIP 330 5% 1/10W
R625	1-216-648-11	s	METAL, CHIP 750 0.5% 1/10W
R626	1-216-037-00	s	METAL, CHIP 330 5% 1/10W
R627	1-216-071-00	s	METAL, CHIP 8.2k 5% 1/10W
R628	1-216-686-11	s	METAL, CHIP 30k 0.5% 1/10W
R629	1-216-069-00	s	METAL, CHIP 6.8k 5% 1/10W

(IO-149/149A BOARD; Suffix -11, 12)

Ref. No. or Q'ty	Part No.	SP	Description
R630	1-216-686-11	s	METAL, CHIP 30k 0.5% 1/10W
R631	1-216-041-00	s	METAL, CHIP 470 5% 1/10W
R632	1-216-041-00	s	METAL, CHIP 470 5% 1/10W
R633	1-216-017-91	s	METAL, CHIP 47 5% 1/10W
R634	1-216-097-91	s	METAL, CHIP 100k 5% 1/10W
R635	1-216-667-11	s	METAL, CHIP 4.7k 0.5% 1/10W
R637	1-216-115-00	s	METAL, CHIP 560k 5% 1/10W[For NTSC]
R637	1-218-772-11	s	METAL, CHIP 680k 0.5% 1/10W [For PAL]
R638	1-216-641-11	s	METAL, CHIP 390 0.5% 1/10W [For NTSC]
R638	1-216-659-11	s	METAL, CHIP 2.2k 0.5% 1/10W [For PAL]
R639	1-216-017-91	s	METAL, CHIP 47 5% 1/10W
R640	1-216-667-11	s	METAL, CHIP 4.7k 0.5% 1/10W [For NTSC]
R640	1-216-663-11	s	METAL, CHIP 3.3k 0.5% 1/10W [For PAL]
R641	1-216-641-11	s	METAL, CHIP 390 0.5% 1/10W [For NTSC]
R641	1-216-650-11	s	METAL, CHIP 910 0.5% 1/10W[For PAL]
R642	1-216-665-11	s	METAL, CHIP 3.9k 0.5% 1/10W
R643	1-216-677-11	s	METAL, CHIP 12k 0.5% 1/10W
R644	1-216-638-11	s	METAL, CHIP 300 0.5% 1/10W [For NTSC]
R644	1-216-635-11	s	METAL, CHIP 220 0.5% 1/10W[For PAL]
R645	1-216-638-11	s	METAL, CHIP 300 0.5% 1/10W [For NTSC]
R645	1-216-635-11	s	METAL, CHIP 220 0.5% 1/10W[For PAL]
R646	1-216-049-91	s	METAL, CHIP 1k 5% 1/10W
R647	1-216-049-91	s	METAL, CHIP 1k 5% 1/10W
R648	1-216-037-00	s	METAL, CHIP 330 5% 1/10W
R649	1-216-037-00	s	METAL, CHIP 330 5% 1/10W
R650	1-216-049-91	s	METAL, CHIP 1k 5% 1/10W
R651	1-216-049-91	s	METAL, CHIP 1k 5% 1/10W
R652	1-216-025-91	s	METAL, CHIP 100 5% 1/10W
R653	1-216-025-91	s	METAL, CHIP 100 5% 1/10W
R654	1-216-025-91	s	METAL, CHIP 100 5% 1/10W
R655	1-216-049-91	s	METAL, CHIP 1k 5% 1/10W
R656	1-216-049-91	s	METAL, CHIP 1k 5% 1/10W
R657	1-216-025-91	s	METAL, CHIP 100 5% 1/10W
R658	1-216-025-91	s	METAL, CHIP 100 5% 1/10W
R659	1-216-049-91	s	METAL, CHIP 1k 5% 1/10W
R660	1-216-295-91	s	RES, CHIP 0
R661	1-216-295-91	s	RES, CHIP 0
R662	1-216-295-91	s	RES, CHIP 0
R701	1-216-634-11	s	METAL, CHIP 200 0.5% 1/10W
R702	1-216-669-11	s	METAL, CHIP 5.6k 0.5% 1/10W
R703	1-216-627-11	s	METAL, CHIP 100 0.5% 1/10W

(IO-149/149A BOARD; Suffix -11, 12)

Ref. No. or Q'ty	Part No.	SP	Description
R704	1-216-651-11	s	METAL, CHIP 1k 0.5% 1/10W
R705	1-216-017-91	s	METAL, CHIP 47 5% 1/10W
R706	1-216-089-91	s	METAL, CHIP 47k 5% 1/10W
R707	1-216-059-00	s	METAL, CHIP 2.7k 5% 1/10W
R708	1-216-037-00	s	METAL, CHIP 330 5% 1/10W
R709	1-216-121-91	s	METAL, CHIP 1M 5% 1/10W
R711	1-216-049-91	s	METAL, CHIP 1k 5% 1/10W
R712	1-216-651-11	s	METAL, CHIP 1k 0.5% 1/10W
R713	1-216-033-00	s	METAL, CHIP 220 5% 1/10W
R714	1-216-085-00	s	METAL, CHIP 33k 5% 1/10W
R715	1-216-651-11	s	METAL, CHIP 1k 0.5% 1/10W
R716	1-216-025-91	s	METAL, CHIP 100 5% 1/10W
R717	1-216-109-00	s	METAL, CHIP 330k 5% 1/10W
R718	1-216-049-91	s	METAL, CHIP 1k 5% 1/10W
R719	1-216-073-00	s	METAL, CHIP 10k 5% 1/10W
R720	1-216-059-00	s	METAL, CHIP 2.7k 5% 1/10W
R721	1-216-059-00	s	METAL, CHIP 2.7k 5% 1/10W
R722	1-216-033-00	s	METAL, CHIP 220 5% 1/10W
R723	1-216-047-91	s	METAL, CHIP 820 5% 1/10W
R724	1-216-635-11	s	METAL, CHIP 220 0.5% 1/10W
R725	1-216-669-11	s	METAL, CHIP 5.6k 0.5% 1/10W
R726	1-216-627-11	s	METAL, CHIP 100 0.5% 1/10W
R727	1-216-651-11	s	METAL, CHIP 1k 0.5% 1/10W
R728	1-216-025-91	s	METAL, CHIP 100 5% 1/10W
R729	1-216-057-00	s	METAL, CHIP 2.2k 5% 1/10W
R730	1-216-634-11	s	METAL, CHIP 200 0.5% 1/10W
R731	1-216-634-11	s	METAL, CHIP 200 0.5% 1/10W
R732	1-216-049-91	s	METAL, CHIP 1k 5% 1/10W
R733	1-216-669-11	s	METAL, CHIP 5.6k 0.5% 1/10W
R734	1-216-669-11	s	METAL, CHIP 5.6k 0.5% 1/10W
R735	1-216-049-91	s	METAL, CHIP 1k 5% 1/10W
R736	1-216-049-91	s	METAL, CHIP 1k 5% 1/10W
R737	1-216-097-91	s	METAL, CHIP 100k 5% 1/10W[For NTSC]
R738	1-216-049-91	s	METAL, CHIP 1k 5% 1/10W
R739	1-216-033-00	s	METAL, CHIP 220 5% 1/10W
R740	1-216-049-91	s	METAL, CHIP 1k 5% 1/10W
R741	1-216-049-91	s	METAL, CHIP 1k 5% 1/10W
R742	1-216-049-91	s	METAL, CHIP 1k 5% 1/10W
R743	1-216-073-00	s	METAL, CHIP 10k 5% 1/10W [For NTSC]
R744	1-216-073-00	s	METAL, CHIP 10k 5% 1/10W [For NTSC]
R745	1-208-625-11	s	METAL, CHIP 2.25k 0.1% 1/16W
R746	1-208-627-11	s	METAL, CHIP 4.41k 0.1% 1/16W
R747	1-208-630-11	s	METAL, CHIP 11.49 0.1% 1/16W
R748	1-216-625-11	s	METAL, CHIP 82 0.5% 1/10W
R749	1-216-622-11	s	METAL, CHIP 62 0.5% 1/10W
R750	1-216-625-11	s	METAL, CHIP 82 0.5% 1/10W
R751	1-216-625-11	s	METAL, CHIP 82 0.5% 1/10W
R752	1-216-057-00	s	METAL, CHIP 2.2k 5% 1/10W
R753	1-216-065-00	s	METAL, CHIP 4.7k 5% 1/10W[For NTSC]
R754	1-216-057-00	s	METAL, CHIP 2.2k 5% 1/10W
R755	1-208-623-11	s	METAL, CHIP 1.43k 0.1% 1/16W
R756	1-208-625-11	s	METAL, CHIP 2.25k 0.1% 1/16W
R757	1-208-627-11	s	METAL, CHIP 4.41k 0.1% 1/16W
R758	1-216-657-11	s	METAL, CHIP 1.8k 0.5% 1/10W
R759	1-208-625-11	s	METAL, CHIP 2.25k 0.1% 1/16W
R760	1-208-630-11	s	METAL, CHIP 11.49k 0.1% 1/16W
R761	1-216-055-00	s	METAL, CHIP 1.8k 5% 1/10W
R762	1-216-049-91	s	METAL, CHIP 1k 5% 1/10W
R763	1-216-055-00	s	METAL, CHIP 1.8k 5% 1/10W

(IO-149/149A BOARD; Suffix -11, 12)

Ref. No. or Q'ty	Part No.	SP	Description
R764	1-216-097-91	s	METAL, CHIP 100k 5% 1/10W
R765	1-216-643-11	s	METAL, CHIP 470 0.5% 1/10W
R766	1-216-041-00	s	METAL, CHIP 470 5% 1/10W
R767	1-216-643-11	s	METAL, CHIP 470 0.5% 1/10W
R768	1-216-041-00	s	METAL, CHIP 470 5% 1/10W
R769	1-216-658-11	s	METAL, CHIP 2k 0.5% 1/10W[For NTSC]
R769	1-216-645-11	s	METAL, CHIP 560 0.5% 1/10W[For PAL]
R770	1-216-643-11	s	METAL, CHIP 470 0.5% 1/10W
R771	1-216-651-11	s	METAL, CHIP 1k 0.5% 1/10W
R772	1-216-658-11	s	METAL, CHIP 2k 0.5% 1/10W[For NTSC]
R772	1-216-645-11	s	METAL, CHIP 560 0.5% 1/10W[For PAL]
R773	1-216-643-11	s	METAL, CHIP 470 0.5% 1/10W
R774	1-216-618-11	s	METAL, CHIP 43 0.50% 1/10W
R775	1-216-651-11	s	METAL, CHIP 1k 0.5% 1/10W
R776	1-218-477-11	s	METAL, CHIP 220 5% 1/4W
R777	1-218-477-11	s	METAL, CHIP 220 5% 1/4W
R778	1-216-045-00	s	METAL, CHIP 680 5% 1/10W
R779	1-216-049-91	s	METAL, CHIP 1k 5% 1/10W
R780	1-216-049-91	s	METAL, CHIP 1k 5% 1/10W
R781	1-216-049-91	s	METAL, CHIP 1k 5% 1/10W
R782	1-216-057-00	s	METAL, CHIP 2.2k 5% 1/10W
R783	1-216-057-00	s	METAL, CHIP 2.2k 5% 1/10W
R784	1-216-057-00	s	METAL, CHIP 2.2k 5% 1/10W
R785	1-216-057-00	s	METAL, CHIP 2.2k 5% 1/10W
R786	1-216-045-00	s	METAL, CHIP 680 5% 1/10W
R787	1-216-073-00	s	METAL, CHIP 10k 5% 1/10W
R788	1-216-025-91	s	METAL, CHIP 100 5% 1/10W
R789	1-216-639-11	s	METAL, CHIP 330 0.5% 1/10W
R790	1-216-025-91	s	METAL, CHIP 100 5% 1/10W
R794	1-216-049-91	s	METAL, CHIP 1k 5% 1/10W
R795	1-216-049-91	s	METAL, CHIP 1k 5% 1/10W
R796	1-216-049-91	s	METAL, CHIP 1k 5% 1/10W
R797	1-216-639-11	s	METAL, CHIP 330 0.5% 1/10W
R798	1-216-045-00	s	METAL, CHIP 680 5% 1/10W
R799	1-216-641-11	s	METAL, CHIP 390 0.5% 1/10W
R800	1-216-049-91	s	METAL, CHIP 1k 5% 1/10W
R801	1-216-017-91	s	METAL, CHIP 47 5% 1/10W
R802	1-216-057-00	s	METAL, CHIP 2.2k 5% 1/10W
R803	1-216-037-00	s	METAL, CHIP 330 5% 1/10W
R804	1-216-065-00	s	METAL, CHIP 4.7k 5% 1/10W
R805	1-216-049-91	s	METAL, CHIP 1k 5% 1/10W
R806	1-216-065-00	s	METAL, CHIP 4.7k 5% 1/10W
R807	1-216-057-00	s	METAL, CHIP 2.2k 5% 1/10W
R808	1-216-025-91	s	METAL, CHIP 100 5% 1/10W
R809	1-216-073-00	s	METAL, CHIP 10k 5% 1/10W [For PAL]
R810	1-216-077-00	s	METAL, CHIP 15k 5% 1/10W [For PAL]
R811	1-216-065-00	s	METAL, CHIP 4.7k 5% 1/10W
R812	1-216-041-00	s	METAL, CHIP 470 5% 1/10W [For PAL]
R813	1-216-049-91	s	METAL, CHIP 1k 5% 1/10W
R814	1-216-025-91	s	METAL, CHIP 100 5% 1/10W [For PAL]
R815	1-216-085-00	s	METAL, CHIP 33k 5% 1/10W [For PAL]
R816	1-216-085-00	s	METAL, CHIP 33k 5% 1/10W [For PAL]
R817	1-216-121-91	s	METAL, CHIP 1M 5% 1/10W
R818	1-216-057-00	s	METAL, CHIP 2.2k 5% 1/10W
R819	1-216-049-91	s	METAL, CHIP 1k 5% 1/10W
R820	1-216-073-00	s	METAL, CHIP 10k 5% 1/10W [For PAL]
R821	1-216-081-00	s	METAL, CHIP 22k 5% 1/10W
R822	1-216-049-91	s	METAL, CHIP 1k 5% 1/10W [For NTSC]
R901	1-216-017-91	s	METAL, CHIP 47 5% 1/10W

(IO-149/149A BOARD; Suffix -11, 12)

Ref. No. or Q'ty	Part No.	SP	Description
R902	1-216-017-91	s	METAL, CHIP 47 5% 1/10W
R903	1-216-295-91	s	RES, CHIP 0
R905	1-216-073-00	s	METAL, CHIP 10k 5% 1/10W
R906	1-216-073-00	s	METAL, CHIP 10k 5% 1/10W
R907	1-216-089-91	s	METAL, CHIP 47k 5% 1/10W
R908	1-216-663-11	s	METAL, CHIP 3.3k 0.5% 1/10W
R909	1-216-663-11	s	METAL, CHIP 3.3k 0.5% 1/10W
R910	1-216-663-11	s	METAL, CHIP 3.3k 0.5% 1/10W
R911	1-216-073-00	s	METAL, CHIP 10k 5% 1/10W
R912	1-216-085-00	s	METAL, CHIP 33k 5% 1/10W
R913	1-216-684-91	s	METAL, CHIP 24k 0.5% 1/10W
R914	1-216-669-11	s	METAL, CHIP 5.6k 0.5% 1/10W
R915	1-216-673-11	s	METAL, CHIP 8.2k 0.5% 1/10W
R916	1-216-687-11	s	METAL, CHIP 33k 0.5% 1/10W
R917	1-216-635-11	s	METAL, CHIP 220 0.5% 1/10W
R918	1-216-635-11	s	METAL, CHIP 220 0.5% 1/10W
R919	1-216-635-11	s	METAL, CHIP 220 0.5% 1/10W
R920	1-216-635-11	s	METAL, CHIP 220 0.5% 1/10W
R921	1-216-679-11	s	METAL, CHIP 15k 0.5% 1/10W [For NTSC]
R922	1-216-683-11	s	METAL, CHIP 22k 0.5% 1/10W
R923	1-216-671-11	s	METAL, CHIP 6.8k 0.5% 1/10W [For NTSC]
R923	1-216-667-11	s	METAL, CHIP 4.7k 0.5% 1/10W [For PAL]
R924	1-216-635-11	s	METAL, CHIP 220 0.5% 1/10W
R925	1-216-635-11	s	METAL, CHIP 220 0.5% 1/10W
R926	1-216-049-91	s	METAL, CHIP 1k 5% 1/10W
R927	1-216-049-91	s	METAL, CHIP 1k 5% 1/10W
R928	1-216-049-91	s	METAL, CHIP 1k 5% 1/10W
R929	1-216-639-11	s	METAL, CHIP 330 0.5% 1/10W
R930	1-216-639-11	s	METAL, CHIP 330 0.5% 1/10W
R931	1-216-639-11	s	METAL, CHIP 330 0.5% 1/10W
R932	1-216-639-11	s	METAL, CHIP 330 0.5% 1/10W
R933	1-216-639-11	s	METAL, CHIP 330 0.5% 1/10W
R934	1-216-639-11	s	METAL, CHIP 330 0.5% 1/10W
R935	1-216-049-91	s	METAL, CHIP 1k 5% 1/10W
R936	1-216-049-91	s	METAL, CHIP 1k 5% 1/10W
R937	1-216-049-91	s	METAL, CHIP 1k 5% 1/10W
R938	1-216-065-00	s	METAL, CHIP 4.7k 5% 1/10W
R939	1-216-645-11	s	METAL, CHIP 560 0.5% 1/10W
R940	1-216-037-00	s	METAL, CHIP 330 5% 1/10W
R941	1-216-049-91	s	METAL, CHIP 1k 5% 1/10W
R944	1-216-049-91	s	METAL, CHIP 1k 5% 1/10W
R945	1-216-065-00	s	METAL, CHIP 4.7k 5% 1/10W
R947	1-216-639-11	s	METAL, CHIP 330 0.5% 1/10W
R948	1-216-025-91	s	METAL, CHIP 100 5% 1/10W
R950	1-216-057-00	s	METAL, CHIP 2.2k 5% 1/10W
R951	1-216-025-91	s	METAL, CHIP 100 5% 1/10W
R952	1-216-049-91	s	METAL, CHIP 1k 5% 1/10W
R953	1-216-646-11	s	METAL, CHIP 620 0.5% 1/10W [For NTSC]
R953	1-216-641-11	s	METAL, CHIP 390 0.5% 1/10W [For PAL]
R954	1-216-057-00	s	METAL, CHIP 2.2k 5% 1/10W

(IO-149/149A BOARD; Suffix -11, 12)

Ref. No. or Q'ty	Part No.	SP	Description
R955	1-216-025-91	s	METAL, CHIP 100 5% 1/10W
R956	1-216-656-11	s	METAL, CHIP 1.6k 0.5% 1/10W
R957	1-216-651-11	s	METAL, CHIP 1k 0.5% 1/10W
R958	1-216-017-91	s	METAL, CHIP 47 5% 1/10W
R959	1-216-646-11	s	METAL, CHIP 620 0.5% 1/10W [For NTSC]
R959	1-216-641-11	s	METAL, CHIP 390 0.5% 1/10W [For PAL]
R960	1-216-049-91	s	METAL, CHIP 1k 5% 1/10W
R961	1-216-656-11	s	METAL, CHIP 1.6k 0.5% 1/10W
R962	1-216-651-11	s	METAL, CHIP 1k 0.5% 1/10W
R963	1-216-635-11	s	METAL, CHIP 220 0.5% 1/10W
R964	1-216-661-11	s	METAL, CHIP 2.7k 0.5% 1/10W
R965	1-216-635-11	s	METAL, CHIP 220 0.5% 1/10W
R966	1-216-661-11	s	METAL, CHIP 2.7k 0.5% 1/10W
R967	1-216-295-91	s	RES, CHIP 0 [For PAL]
R968	1-216-295-91	s	RES, CHIP 0 [For PAL]
R969	1-216-295-91	s	RES, CHIP 0
R970	1-216-295-91	s	RES, CHIP 0
R971	1-216-017-91	s	METAL, CHIP 47 5% 1/10W
R972	1-216-017-91	s	METAL, CHIP 47 5% 1/10W
R973	1-216-624-11	s	METAL, CHIP 75 0.5% 1/10W
R977	1-216-659-11	s	METAL, CHIP 2.2k 0.5% 1/10W
R978	1-216-639-11	s	METAL, CHIP 330 0.5% 1/10W
R979	1-216-065-00	s	METAL, CHIP 4.7k 5% 1/10W
R980	1-216-049-91	s	METAL, CHIP 1k 5% 1/10W
R981	1-216-049-91	s	METAL, CHIP 1k 5% 1/10W
R982	1-216-121-91	s	METAL, CHIP 1M 5% 1/10W
R984	1-216-049-91	s	METAL, CHIP 1k 5% 1/10W
R985	1-216-663-11	s	METAL, CHIP 3.3k 0.5% 1/10W
R987	1-216-033-00	s	METAL, CHIP 220 5% 1/10W
R988	1-216-049-91	s	METAL, CHIP 1k 5% 1/10W
R989	1-216-065-00	s	METAL, CHIP 4.7k 5% 1/10W
R990	1-216-045-00	s	METAL, CHIP 680 5% 1/10W
R991	1-216-667-11	s	METAL, CHIP 4.7k 0.5% 1/10W
R992	1-216-049-91	s	METAL, CHIP 1k 5% 1/10W
R993	1-216-073-00	s	METAL, CHIP 10k 5% 1/10W
R995	1-216-097-91	s	METAL, CHIP 100k 5% 1/10W
R996	1-216-295-91	s	RES, CHIP 0
R998	1-216-624-11	s	METAL, CHIP 75 0.5% 1/10W
R999	1-216-295-91	s	RES, CHIP 0
R1001	1-216-073-00	s	METAL, CHIP 10k 5% 1/10W
R1002	1-216-073-00	s	METAL, CHIP 10k 5% 1/10W
R1003	1-216-049-91	s	METAL, CHIP 1k 5% 1/10W
R1004	1-216-653-11	s	METAL, CHIP 1.2k 0.5% 1/10W
R1005	1-216-057-00	s	METAL, CHIP 2.2k 5% 1/10W
R1006	1-216-057-00	s	METAL, CHIP 2.2k 5% 1/10W
R1007	1-216-057-00	s	METAL, CHIP 2.2k 5% 1/10W
R1008	1-216-073-00	s	METAL, CHIP 10k 5% 1/10W
R1009	1-216-073-00	s	METAL, CHIP 10k 5% 1/10W
R1010	1-216-049-91	s	METAL, CHIP 1k 5% 1/10W
R1011	1-216-049-91	s	METAL, CHIP 1k 5% 1/10W
R1012	1-216-049-91	s	METAL, CHIP 1k 5% 1/10W
R1013	1-216-049-91	s	METAL, CHIP 1k 5% 1/10W
R1014	1-216-097-91	s	METAL, CHIP 100k 5% 1/10W
R1015	1-216-049-91	s	METAL, CHIP 1k 5% 1/10W
R1016	1-216-646-11	s	METAL, CHIP 620 0.5% 1/10W
R1017	1-216-057-00	s	METAL, CHIP 2.2k 5% 1/10W
R1018	1-216-057-00	s	METAL, CHIP 2.2k 5% 1/10W

(IO-149/149A BOARD; Suffix -11, 12)

Ref. No. or Q'ty	Part No.	SP	Description	
R1019	1-216-045-00	s	METAL, CHIP 680 5% 1/10W	
R1020	1-216-121-91	s	METAL, CHIP 1M 5% 1/10W	
R1021	1-216-025-91	s	METAL, CHIP 100 5% 1/10W	
R1022	1-216-065-00	s	METAL, CHIP 4.7k 5% 1/10W	
R1023	1-216-049-91	s	METAL, CHIP 1k 5% 1/10W	
R1024	1-216-065-00	s	METAL, CHIP 4.7k 5% 1/10W	
R1025	1-218-764-11	s	METAL, CHIP 330k 0.5% 1/10W	[For PAL]
R1026	1-216-699-11	s	METAL, CHIP 100k 0.5% 1/10W	[For NTSC]
R1026	1-218-764-11	s	METAL, CHIP 330k 0.5% 1/10W	[For PAL]
R1027	1-216-117-00	s	METAL, CHIP 680k 5% 1/10W	
R1028	1-216-073-00	s	METAL, CHIP 10k 5% 1/10W	
R1029	1-216-667-11	s	METAL, CHIP 4.7k 0.5% 1/10W	
R1030	1-216-089-91	s	METAL, CHIP 47k 5% 1/10W	
R1031	1-216-085-00	s	METAL, CHIP 33k 5% 1/10W	
R1032	1-216-667-11	s	METAL, CHIP 4.7k 0.5% 1/10W	
R1033	1-218-760-11	s	METAL, CHIP 220k 0.5% 1/10W	
R1034	1-216-049-91	s	METAL, CHIP 1k 5% 1/10W	
R1035	1-216-073-00	s	METAL, CHIP 10k 5% 1/10W	
R1036	1-216-085-00	s	METAL, CHIP 33k 5% 1/10W	
R1037	1-216-085-00	s	METAL, CHIP 33k 5% 1/10W	
R1038	1-216-065-00	s	METAL, CHIP 4.7k 5% 1/10W	
R1039	1-216-049-91	s	METAL, CHIP 1k 5% 1/10W	
R1040	1-216-049-91	s	METAL, CHIP 1k 5% 1/10W	
R1041	1-216-025-91	s	METAL, CHIP 100 5% 1/10W	
R1042	1-216-670-11	s	METAL, CHIP 6.2k 0.5% 1/10W	
R1043	1-216-634-11	s	METAL, CHIP 200 0.5% 1/10W	
R1044	1-216-663-11	s	METAL, CHIP 3.3k 0.5% 1/10W	
R1045	1-216-085-00	s	METAL, CHIP 33k 5% 1/10W	
R1046	1-216-065-00	s	METAL, CHIP 4.7k 5% 1/10W	
R1047	1-216-117-00	s	METAL, CHIP 680k 5% 1/10W	
R1048	1-216-658-11	s	METAL, CHIP 2k 0.5% 1/10W	
R1049	1-216-653-11	s	METAL, CHIP 1.2k 0.5% 1/10W	
R1050	1-216-648-11	s	METAL, CHIP 750 0.5% 1/10W	
R1051	1-216-037-00	s	METAL, CHIP 330 5% 1/10W	
R1052	1-216-667-11	s	METAL, CHIP 4.7k 0.5% 1/10W	
R1053	1-216-671-11	s	METAL, CHIP 6.8k 0.5% 1/10W	
R1054	1-216-686-11	s	METAL, CHIP 30k 0.5% 1/10W	
R1055	1-216-049-91	s	METAL, CHIP 1k 5% 1/10W	
R1056	1-216-041-00	s	METAL, CHIP 470 5% 1/10W	
R1057	1-216-049-91	s	METAL, CHIP 1k 5% 1/10W	
R1058	1-216-133-00	s	METAL, CHIP 3.3M 5% 1/10W	
R1059	1-216-675-11	s	METAL, CHIP 10k 0.5% 1/10W	
R1060	1-216-675-11	s	METAL, CHIP 10k 0.5% 1/10W	
R1061	1-216-025-91	s	METAL, CHIP 100 5% 1/10W	
R1062	1-216-049-91	s	METAL, CHIP 1k 5% 1/10W	
R1064	1-216-651-11	s	METAL, CHIP 1k 0.5% 1/10W	
R1065	1-216-665-11	s	METAL, CHIP 3.9k 0.5% 1/10W	
R1066	1-216-073-00	s	METAL, CHIP 10k 5% 1/10W	
R1067	1-216-049-91	s	METAL, CHIP 1k 5% 1/10W	
R1068	1-216-073-00	s	METAL, CHIP 10k 5% 1/10W	
R1069	1-216-049-91	s	METAL, CHIP 1k 5% 1/10W	
R1070	1-216-635-11	s	METAL, CHIP 220 0.5% 1/10W	

(IO-149/149A BOARD; Suffix -11, 12)

Ref. No. or Q'ty	Part No.	SP	Description	
R1071	1-216-639-11	s	METAL, CHIP 330 0.5% 1/10W	
R1072	1-216-295-91	s	RES, CHIP 0	[For PAL]
R1073	1-216-295-91	s	RES, CHIP 0	
R1075	1-216-059-00	s	METAL, CHIP 2.7k 5% 1/10W	
R1076	1-216-097-91	s	METAL, CHIP 100k 5% 1/10W	
R1077	1-216-295-91	s	RES, CHIP 0	[For PAL]
R1078	1-216-295-91	s	RES, CHIP 0	[For PAL]
R1079	1-216-097-91	s	METAL, CHIP 100k 5% 1/10W	
R1080	1-216-025-91	s	METAL, CHIP 100 5% 1/10W	
R1081	1-216-073-00	s	METAL, CHIP 10k 5% 1/10W	
R1083	1-216-049-91	s	METAL, CHIP 1k 5% 1/10W	
R1084	1-216-059-00	s	METAL, CHIP 2.7k 5% 1/10W	
R1085	1-216-025-91	s	METAL, CHIP 100 5% 1/10W	
R1086	1-216-117-00	s	METAL, CHIP 680k 5% 1/10W	
R1087	1-216-696-11	s	METAL, CHIP 75k 0.5% 1/10W	
R1088	1-216-074-00	s	METAL, CHIP 11k 10% 1/10W	
R1089	1-216-651-11	s	METAL, CHIP 1k 0.5% 1/10W	
R1090	1-216-651-11	s	METAL, CHIP 1k 0.5% 1/10W	
R1091	1-216-655-11	s	METAL, CHIP 1.5k 0.5% 1/10W	[For NTSC]
R1091	1-216-653-11	s	METAL, CHIP 1.2k 0.5% 1/10W	[For PAL]
R1092	1-216-655-11	s	METAL, CHIP 1.5k 0.5% 1/10W	[For NTSC]
R1092	1-216-653-11	s	METAL, CHIP 1.2k 0.5% 1/10W	[For PAL]
R1093	1-216-061-00	s	METAL, CHIP 3.3k 5% 1/10W	
R1094	1-216-663-11	s	METAL, CHIP 3.3k 0.5% 1/10W	
R1095	1-216-049-91	s	METAL, CHIP 1k 5% 1/10W	
R1097	1-216-025-91	s	METAL, CHIP 100 5% 1/10W	
R1098	1-216-683-11	s	METAL, CHIP 22k 0.5% 1/10W	
R1099	1-216-683-11	s	METAL, CHIP 22k 0.5% 1/10W	
R1100	1-216-081-00	s	METAL, CHIP 22k 5% 1/10W	
R1101	1-216-113-00	s	METAL, CHIP 470k 5% 1/10W	
R1102	1-216-677-11	s	METAL, CHIP 12k 0.5% 1/10W	
R1103	1-216-073-00	s	METAL, CHIP 10k 5% 1/10W	
R1104	1-216-113-00	s	METAL, CHIP 470k 5% 1/10W	
R1105	1-216-103-00	s	METAL, CHIP 180k 5% 1/10W	
R1106	1-216-073-00	s	METAL, CHIP 10k 5% 1/10W	
R1108	1-216-655-11	s	METAL, CHIP 1.5k 0.5% 1/10W	
R1109	1-216-645-11	s	METAL, CHIP 560 0.5% 1/10W	
RB101	1-239-999-11	s	RESISTOR BLOCK, CHIP 1k x 4	
RB102	1-239-998-11	s	RESISTOR BLOCK, CHIP 100 x 4	
RB103	1-233-237-11	s	RESISTOR BLOCK, CHIP 100k x 4	
RB201	1-233-235-11	s	RESISTOR BLOCK, CHIP 10k x 4	
RB202	1-233-235-11	s	RESISTOR BLOCK, CHIP 10k x 4	
RB701	1-233-234-11	s	RESISTOR BLOCK, CHIP 2.2k x 4	
RB1000	1-233-237-11	s	RESISTOR BLOCK, CHIP 100k x 4	
RB1001	1-239-999-11	s	RESISTOR BLOCK, CHIP 1k x 4	
RV101	1-237-034-11	s	RES, ADJ METAL 2k	
RV102	1-237-034-11	s	RES, ADJ METAL 2k	
RV103	1-237-034-11	s	RES, ADJ METAL 2k	
RV104	1-237-034-11	s	RES, ADJ METAL 2k	[For NTSC]
RV105	1-237-035-11	s	RES, ADJ METAL 5k	

(IO-149/149A BOARD; Suffix -11, 12)

Ref. No. or Q'ty	Part No.	SP	Description
RV106	1-237-035-11	s	RES, ADJ METAL 5k
RV107	1-237-036-11	s	RES, ADJ METAL 10k
RV108	1-237-038-11	s	RES, ADJ METAL 50k
RV109	1-237-038-11	s	RES, ADJ METAL 50k
RV110	1-237-035-11	s	RES, ADJ METAL 5k
RV111	1-237-035-11	s	RES, ADJ METAL 5k
RV112	1-237-034-11	s	RES, ADJ METAL 2k
RV301	1-237-033-11	s	RES, ADJ METAL 1k
RV302	1-237-034-11	s	RES, ADJ METAL 2k
RV303	1-237-032-11	s	RES, ADJ METAL 500
RV304	1-237-033-11	s	RES, ADJ METAL 1k
RV305	1-237-035-11	s	RES, ADJ METAL 5k
RV306	1-237-033-11	s	RES, ADJ METAL 1k
RV307	1-237-033-11	s	RES, ADJ METAL 1k
RV308	1-237-032-11	s	RES, ADJ METAL 500
RV309	1-237-034-11	s	RES, ADJ METAL 2k
RV310	1-237-034-11	s	RES, ADJ METAL 2k
RV311	1-237-032-11	s	RES, ADJ METAL 500
RV312	1-237-035-11	s	RES, ADJ METAL 5k
RV313	1-237-035-11	s	RES, ADJ METAL 5k
RV314	1-237-032-11	s	RES, ADJ METAL 500
RV315	1-237-032-11	s	RES, ADJ METAL 500
RV316	1-237-033-11	s	RES, ADJ METAL 1k
RV317	1-237-033-11	s	RES, ADJ METAL 1k
RV318	1-237-030-11	s	RES, ADJ METAL 100
RV319	1-237-030-11	s	RES, ADJ METAL 100
RV501	1-237-035-11	s	RES, ADJ METAL 5k
RV502	1-237-036-11	s	RES, ADJ METAL 10k
RV503	1-237-037-11	s	RES, ADJ METAL 20k
RV504	1-237-036-11	s	RES, ADJ METAL 10k
RV505	1-237-034-11	s	RES, ADJ METAL 2k
RV506	1-237-033-11	s	RES, ADJ METAL 1k
RV601	1-237-035-11	s	RES, ADJ METAL 5k
RV701	1-237-033-11	s	RES, ADJ METAL 1k
RV702	1-237-033-11	s	RES, ADJ METAL 1k
RV703	1-237-032-11	s	RES, ADJ METAL 500
RV704	1-237-031-11	s	RES, ADJ METAL 200
RV901	1-237-034-11	s	RES, ADJ METAL 2k
RV902	1-237-035-11	s	RES, ADJ METAL 5k
RV903	1-237-036-11	s	RES, ADJ METAL 10k
RV904	1-237-031-11	s	RES, ADJ METAL 200
RV905	1-237-034-11	s	RES, ADJ METAL 2k
RV906	1-237-034-11	s	RES, ADJ METAL 2k
RV907	1-237-034-11	s	RES, ADJ METAL 2k
RV908	1-237-034-11	s	RES, ADJ METAL 2k
RV909	1-237-034-11	s	RES, ADJ METAL 2k
RV910	1-237-034-11	s	RES, ADJ METAL 2k
RV911	1-237-034-11	s	RES, ADJ METAL 2k
RV912	1-237-034-11	s	RES, ADJ METAL 2k
RV913	1-237-031-11	s	RES, ADJ METAL 200
RV914	1-237-031-11	s	RES, ADJ METAL 200
RV915	1-237-033-11	s	RES, ADJ METAL 1k
RV1001	1-237-034-11	s	RES, ADJ METAL 2k
RV1002	1-237-034-11	s	RES, ADJ METAL 2k
RV1003	1-237-034-11	s	RES, ADJ METAL 2k
RV1004	1-237-034-11	s	RES, ADJ METAL 2k
S901	1-571-275-31	s	SWITCH, SLIDE

(IO-149/149A BOARD; Suffix -11, 12)

Ref. No. or Q'ty	Part No.	SP	Description	
TH101	1-809-352-11	s	THERMISTOR, CHIP 1.5k	
TH901	1-809-352-11	s	THERMISTOR, CHIP 1.5k	[For NTSC]
X101	1-767-260-11	s	CRYSTAL 13.50MHz	
X102	1-767-260-11	s	CRYSTAL 13.50MHz	
X103	1-767-260-11	s	CRYSTAL 13.50MHz	
X601	1-767-262-11	s	CRYSTAL 27.00MHz	
X602	1-527-722-00	s	CRYSTAL 14.31818MHz	[For NTSC]
X602	1-760-457-11	s	CRYSTAL 17.7345MHz	[For PAL]
X1001	1-760-109-21	s	CRYSTAL 10.738635MHz	[For NTSC]
X1001	1-760-183-21	s	CRYSTAL 10.664135MHz	[For PAL]
X1002	1-527-722-00	s	CRYSTAL 14.31818MHz	[For NTSC]
X1002	1-760-457-11	s	CRYSTAL 17.7345MHz	[For PAL]

KY-336 BOARD

Ref. No. or Q'ty	Part No.	SP	Description
1pc	A-8277-878-A	o	MOUNTED CIRCUIT BOARD, KY-336
2pcs	7-682-648-09	s	SCREW +PS 3x8
C1	1-163-038-91	s	CERAMIC, CHIP 0.1uF 25V
C2	1-163-038-91	s	CERAMIC, CHIP 0.1uF 25V
C3	1-163-038-91	s	CERAMIC, CHIP 0.1uF 25V
C4	1-163-038-91	s	CERAMIC, CHIP 0.1uF 25V
C5	1-163-038-91	s	CERAMIC, CHIP 0.1uF 25V
C6	1-163-038-91	s	CERAMIC, CHIP 0.1uF 25V
C7	1-163-133-00	s	CERAMIC, CHIP 470pF 5% 50V
C8	1-163-038-91	s	CERAMIC, CHIP 0.1uF 25V
C9	1-163-038-91	s	CERAMIC, CHIP 0.1uF 25V
C10	1-163-038-91	s	CERAMIC, CHIP 0.1uF 25V
C11	1-163-038-91	s	CERAMIC, CHIP 0.1uF 25V
C16	1-163-038-91	s	CERAMIC, CHIP 0.1uF 25V
C17	1-104-664-11	s	ELECT 47uF 20% 25V
C18	1-163-275-11	s	CERAMIC, CHIP 0.001uF 5% 50V
C19	1-126-935-11	s	ELECT 470uF 20% 16V
C20	1-126-933-11	s	ELECT 100uF 20% 16V
C21	1-126-934-11	s	ELECT 220uF 20% 16V
C22	1-163-012-00	s	CERAMIC, CHIP 0.0018uF 10% 50V
C23	1-111-136-11	s	ELECT 47uF 20% 63V
C24	1-126-968-11	s	ELECT 100uF 20% 50V
C25	1-126-968-11	s	ELECT 100uF 20% 50V
C26	1-163-038-91	s	CERAMIC, CHIP 0.1uF 25V
C27	1-126-965-11	s	ELECT 22uF 20% 50V
C28	1-104-664-11	s	ELECT 47uF 20% 25V
C29	1-104-664-11	s	ELECT 47uF 20% 25V
C30	1-163-038-91	s	CERAMIC, CHIP 0.1uF 25V
C31	1-163-133-00	s	CERAMIC, CHIP 470pF 5% 50V
C32	1-163-038-91	s	CERAMIC, CHIP 0.1uF 25V
C33	1-163-038-91	s	CERAMIC, CHIP 0.1uF 25V
C34	1-163-133-00	s	CERAMIC, CHIP 470pF 5% 50V
C39	1-126-935-11	s	ELECT 470uF 20% 16V
C51	1-163-251-11	s	CERAMIC, CHIP 100pF 5% 50V
C52	1-163-251-11	s	CERAMIC, CHIP 100pF 5% 50V
C53	1-163-251-11	s	CERAMIC, CHIP 100pF 5% 50V
C54	1-163-251-11	s	CERAMIC, CHIP 100pF 5% 50V
C55	1-163-251-11	s	CERAMIC, CHIP 100pF 5% 50V
C56	1-163-251-11	s	CERAMIC, CHIP 100pF 5% 50V
C57	1-163-251-11	s	CERAMIC, CHIP 100pF 5% 50V
C58	1-163-251-11	s	CERAMIC, CHIP 100pF 5% 50V
C59	1-163-251-11	s	CERAMIC, CHIP 100pF 5% 50V
C60	1-163-251-11	s	CERAMIC, CHIP 100pF 5% 50V
C61	1-163-251-11	s	CERAMIC, CHIP 100pF 5% 50V
C62	1-163-251-11	s	CERAMIC, CHIP 100pF 5% 50V
C63	1-163-251-11	s	CERAMIC, CHIP 100pF 5% 50V
C64	1-163-251-11	s	CERAMIC, CHIP 100pF 5% 50V
C65	1-163-251-11	s	CERAMIC, CHIP 100pF 5% 50V
C66	1-163-251-11	s	CERAMIC, CHIP 100pF 5% 50V
C67	1-163-251-11	s	CERAMIC, CHIP 100pF 5% 50V
C68	1-163-251-11	s	CERAMIC, CHIP 100pF 5% 50V
C69	1-163-251-11	s	CERAMIC, CHIP 100pF 5% 50V
C70	1-163-251-11	s	CERAMIC, CHIP 100pF 5% 50V
C71	1-163-251-11	s	CERAMIC, CHIP 100pF 5% 50V
C72	1-163-251-11	s	CERAMIC, CHIP 100pF 5% 50V
C73	1-163-251-11	s	CERAMIC, CHIP 100pF 5% 50V
C74	1-163-251-11	s	CERAMIC, CHIP 100pF 5% 50V
C75	1-163-251-11	s	CERAMIC, CHIP 100pF 5% 50V

(KY-336 BOARD)

Ref. No. or Q'ty	Part No.	SP	Description
C76	1-163-251-11	s	CERAMIC, CHIP 100pF 5% 50V
C77	1-163-251-11	s	CERAMIC, CHIP 100pF 5% 50V
C78	1-163-251-11	s	CERAMIC, CHIP 100pF 5% 50V
C79	1-163-251-11	s	CERAMIC, CHIP 100pF 5% 50V
C80	1-163-251-11	s	CERAMIC, CHIP 100pF 5% 50V
C81	1-163-251-11	s	CERAMIC, CHIP 100pF 5% 50V
C82	1-163-251-11	s	CERAMIC, CHIP 100pF 5% 50V
C83	1-163-251-11	s	CERAMIC, CHIP 100pF 5% 50V
C84	1-163-251-11	s	CERAMIC, CHIP 100pF 5% 50V
C85	1-163-251-11	s	CERAMIC, CHIP 100pF 5% 50V
C86	1-163-251-11	s	CERAMIC, CHIP 100pF 5% 50V
C87	1-163-251-11	s	CERAMIC, CHIP 100pF 5% 50V
C88	1-163-251-11	s	CERAMIC, CHIP 100pF 5% 50V
C89	1-163-251-11	s	CERAMIC, CHIP 100pF 5% 50V
C90	1-163-251-11	s	CERAMIC, CHIP 100pF 5% 50V
C91	1-163-251-11	s	CERAMIC, CHIP 100pF 5% 50V
C92	1-163-251-11	s	CERAMIC, CHIP 100pF 5% 50V
C93	1-163-251-11	s	CERAMIC, CHIP 100pF 5% 50V
C94	1-163-251-11	s	CERAMIC, CHIP 100pF 5% 50V
C95	1-163-251-11	s	CERAMIC, CHIP 100pF 5% 50V
C96	1-163-251-11	s	CERAMIC, CHIP 100pF 5% 50V
C97	1-163-251-11	s	CERAMIC, CHIP 100pF 5% 50V
C98	1-163-251-11	s	CERAMIC, CHIP 100pF 5% 50V
C99	1-163-251-11	s	CERAMIC, CHIP 100pF 5% 50V
C100	1-163-251-11	s	CERAMIC, CHIP 100pF 5% 50V
C101	1-163-251-11	s	CERAMIC, CHIP 100pF 5% 50V
CN712	1-565-189-11	s	CONNECTOR, FPC 36P
CN713	1-506-468-11	s	CONNECTOR, 3P, MALE
CN714	1-573-397-11	s	CONNECTOR, FPC 11P
D1	8-719-941-23	s	DIODE DA204U
D2	8-719-941-23	s	DIODE DA204U
D3	8-719-941-23	s	DIODE DA204U
D5	8-719-941-23	s	DIODE DA204U
D6	8-719-024-81	s	DIODE 1SS300-TE85L
D7	8-719-024-81	s	DIODE 1SS300-TE85L
D8	8-719-024-81	s	DIODE 1SS300-TE85L
D9	8-719-024-81	s	DIODE 1SS300-TE85L
D10	8-719-024-81	s	DIODE 1SS300-TE85L
D11	8-719-024-81	s	DIODE 1SS300-TE85L
D12	8-719-110-02	s	DIODE RD7.5ESB1
D13	8-719-108-24	s	DIODE 1SS223
D14	8-719-108-24	s	DIODE 1SS223
D15	8-719-158-61	s	DIODE RD16SB2
D16	8-719-901-83	s	DIODE 1SS83
D17	8-719-160-00	s	DIODE RD2.0FB1
D18	8-719-160-00	s	DIODE RD2.0FB1
D19	8-719-160-00	s	DIODE RD2.0FB1
D20	8-719-024-81	s	DIODE 1SS300-TE85L
D21	8-719-105-99	s	DIODE RD6.2M-B1
D22	8-719-105-99	s	DIODE RD6.2M-B1
D23	8-719-105-99	s	DIODE RD6.2M-B1
D24	8-719-105-99	s	DIODE RD6.2M-B1
D25	8-719-941-23	s	DIODE DA204U
D26	8-719-941-23	s	DIODE DA204U
D27	8-719-941-23	s	DIODE DA204U
D28	8-719-941-23	s	DIODE DA204U
D29	8-719-941-23	s	DIODE DA204U
D30	8-719-941-23	s	DIODE DA204U

(KY-336 BOARD)

Ref. No. or Q'ty	Part No.	SP	Description
D31	8-719-941-23	s	DIODE DA204U
E1	1-535-881-21	o	TERMINAL, TP
IC1	8-759-477-03	s	IC UPD78013FYCW-W07
IC2	8-759-350-99	s	IC M66004M6FP200D
IC3	8-759-186-44	s	IC TC74VHC125F
IC4	8-759-940-45	s	IC S-8054HN-CB
IC5	8-759-431-42	s	IC TD62504F-TEL
L1	1-410-385-11	s	INDUCTOR, CHIP 22uH
L2	1-410-381-11	s	INDUCTOR CHIP 10uH
L4	1-412-533-21	s	INDUCTOR 47uH
L5	1-412-031-11	s	INDUCTOR CHIP 47uH
ND1	1-517-599-11	s	UNIT, FLD
ND2	1-517-598-11	s	UNIT, FLD
PS1	⚠ 1-532-637-00	s	LINK, IC 1.0A
PS2	⚠ 1-532-605-00	s	LINK, IC 0.4A
Q1	8-729-028-91	s	TRANSISTOR DTA144EUA-T106
Q2	8-729-028-91	s	TRANSISTOR DTA144EUA-T106
Q3	8-729-140-63	s	TRANSISTOR 2SA1611-M5M6
Q4	8-729-427-70	s	TRANSISTOR XP4401-TXE
Q5	8-729-230-49	s	TRANSISTOR 2SC2712-YG
Q6	8-729-822-55	s	TRANSISTOR 2SD1669R
Q7	8-729-106-68	s	TRANSISTOR 2SC1615A-GP
Q8	8-729-216-22	s	TRANSISTOR 2SA1162
Q9	8-729-019-87	s	TRANSISTOR 2SC3392-6-TB
Q10	8-729-216-22	s	TRANSISTOR 2SA1162
Q11	8-729-019-87	s	TRANSISTOR 2SC3392-6-TB
Q12	8-729-216-22	s	TRANSISTOR 2SA1162
Q13	8-729-019-87	s	TRANSISTOR 2SC3392-6-TB
Q14	8-729-216-22	s	TRANSISTOR 2SA1162
Q15	8-729-019-87	s	TRANSISTOR 2SC3392-6-TB
Q16	8-729-216-22	s	TRANSISTOR 2SA1162
Q17	8-729-019-87	s	TRANSISTOR 2SC3392-6-TB
Q18	8-729-216-22	s	TRANSISTOR 2SA1162
Q19	8-729-019-87	s	TRANSISTOR 2SC3392-6-TB
Q20	8-729-216-22	s	TRANSISTOR 2SA1162
Q21	8-729-019-87	s	TRANSISTOR 2SC3392-6-TB
Q22	8-729-216-22	s	TRANSISTOR 2SA1162
Q23	8-729-019-87	s	TRANSISTOR 2SC3392-6-TB
Q24	8-729-216-22	s	TRANSISTOR 2SA1162
Q25	8-729-019-87	s	TRANSISTOR 2SC3392-6-TB
Q26	8-729-216-22	s	TRANSISTOR 2SA1162
Q27	8-729-019-87	s	TRANSISTOR 2SC3392-6-TB
Q28	8-729-216-22	s	TRANSISTOR 2SA1162
Q29	8-729-019-87	s	TRANSISTOR 2SC3392-6-TB
Q30	8-729-216-22	s	TRANSISTOR 2SA1162
Q31	8-729-019-87	s	TRANSISTOR 2SC3392-6-TB
Q32	8-729-216-22	s	TRANSISTOR 2SA1162
Q33	8-729-019-87	s	TRANSISTOR 2SC3392-6-TB
Q34	8-729-216-22	s	TRANSISTOR 2SA1162
Q35	8-729-019-87	s	TRANSISTOR 2SC3392-6-TB
Q36	8-729-216-22	s	TRANSISTOR 2SA1162
Q37	8-729-019-87	s	TRANSISTOR 2SC3392-6-TB
Q38	8-729-216-22	s	TRANSISTOR 2SA1162
Q39	8-729-019-87	s	TRANSISTOR 2SC3392-6-TB
Q40	8-729-216-22	s	TRANSISTOR 2SA1162
Q41	8-729-019-87	s	TRANSISTOR 2SC3392-6-TB

(KY-336 BOARD)

Ref. No. or Q'ty	Part No.	SP	Description
Q42	8-729-216-22	s	TRANSISTOR 2SA1162
Q43	8-729-019-87	s	TRANSISTOR 2SC3392-6-TB
Q44	8-729-216-22	s	TRANSISTOR 2SA1162
Q45	8-729-019-87	s	TRANSISTOR 2SC3392-6-TB
Q46	8-729-216-22	s	TRANSISTOR 2SA1162
Q47	8-729-019-87	s	TRANSISTOR 2SC3392-6-TB
Q48	8-729-216-22	s	TRANSISTOR 2SA1162
Q49	8-729-019-87	s	TRANSISTOR 2SC3392-6-TB
Q50	8-729-216-22	s	TRANSISTOR 2SA1162
Q51	8-729-019-87	s	TRANSISTOR 2SC3392-6-TB
Q52	8-729-216-22	s	TRANSISTOR 2SA1162
Q53	8-729-019-87	s	TRANSISTOR 2SC3392-6-TB
Q54	8-729-216-22	s	TRANSISTOR 2SA1162
Q55	8-729-019-87	s	TRANSISTOR 2SC3392-6-TB
Q56	8-729-216-22	s	TRANSISTOR 2SA1162
Q57	8-729-019-87	s	TRANSISTOR 2SC3392-6-TB
Q58	8-729-216-22	s	TRANSISTOR 2SA1162
Q59	8-729-019-87	s	TRANSISTOR 2SC3392-6-TB
Q60	8-729-216-22	s	TRANSISTOR 2SA1162
Q61	8-729-019-87	s	TRANSISTOR 2SC3392-6-TB
Q62	8-729-216-22	s	TRANSISTOR 2SA1162
Q63	8-729-019-87	s	TRANSISTOR 2SC3392-6-TB
Q64	8-729-216-22	s	TRANSISTOR 2SA1162
Q65	8-729-019-87	s	TRANSISTOR 2SC3392-6-TB
Q66	8-729-216-22	s	TRANSISTOR 2SA1162
Q67	8-729-019-87	s	TRANSISTOR 2SC3392-6-TB
Q68	8-729-216-22	s	TRANSISTOR 2SA1162
Q69	8-729-019-87	s	TRANSISTOR 2SC3392-6-TB
Q70	8-729-216-22	s	TRANSISTOR 2SA1162
Q71	8-729-019-87	s	TRANSISTOR 2SC3392-6-TB
Q72	8-729-216-22	s	TRANSISTOR 2SA1162
Q73	8-729-019-87	s	TRANSISTOR 2SC3392-6-TB
Q74	8-729-216-22	s	TRANSISTOR 2SA1162
Q75	8-729-019-87	s	TRANSISTOR 2SC3392-6-TB
Q76	8-729-216-22	s	TRANSISTOR 2SA1162
Q77	8-729-019-87	s	TRANSISTOR 2SC3392-6-TB
Q78	8-729-216-22	s	TRANSISTOR 2SA1162
Q79	8-729-019-87	s	TRANSISTOR 2SC3392-6-TB
Q80	8-729-216-22	s	TRANSISTOR 2SA1162
Q81	8-729-019-87	s	TRANSISTOR 2SC3392-6-TB
Q82	8-729-216-22	s	TRANSISTOR 2SA1162
Q83	8-729-019-87	s	TRANSISTOR 2SC3392-6-TB
Q84	8-729-216-22	s	TRANSISTOR 2SA1162
Q85	8-729-019-87	s	TRANSISTOR 2SC3392-6-TB
Q86	8-729-216-22	s	TRANSISTOR 2SA1162
Q87	8-729-019-87	s	TRANSISTOR 2SC3392-6-TB
Q88	8-729-216-22	s	TRANSISTOR 2SA1162
Q89	8-729-019-87	s	TRANSISTOR 2SC3392-6-TB
Q90	8-729-216-22	s	TRANSISTOR 2SA1162
Q91	8-729-019-87	s	TRANSISTOR 2SC3392-6-TB
Q92	8-729-216-22	s	TRANSISTOR 2SA1162
Q93	8-729-019-87	s	TRANSISTOR 2SC3392-6-TB
Q94	8-729-216-22	s	TRANSISTOR 2SA1162
Q95	8-729-019-87	s	TRANSISTOR 2SC3392-6-TB
Q96	8-729-216-22	s	TRANSISTOR 2SA1162
Q97	8-729-019-87	s	TRANSISTOR 2SC3392-6-TB
Q98	8-729-216-22	s	TRANSISTOR 2SA1162
Q99	8-729-019-87	s	TRANSISTOR 2SC3392-6-TB
Q100	8-729-216-22	s	TRANSISTOR 2SA1162

(KY-336 BOARD)

Ref. No. or Q'ty	Part No.	SP	Description
Q101	8-729-019-87	s	TRANSISTOR 2SC3392-6-TB
Q102	8-729-216-22	s	TRANSISTOR 2SA1162
Q103	8-729-019-87	s	TRANSISTOR 2SC3392-6-TB
Q104	8-729-216-22	s	TRANSISTOR 2SA1162
Q105	8-729-019-87	s	TRANSISTOR 2SC3392-6-TB
Q106	8-729-216-22	s	TRANSISTOR 2SA1162
Q107	8-729-019-87	s	TRANSISTOR 2SC3392-6-TB
Q108	8-729-216-22	s	TRANSISTOR 2SA1162
Q109	8-729-230-49	s	TRANSISTOR 2SC2712-YG
R1	1-216-089-91	s	METAL, CHIP 47k 5% 1/10W
R2	1-216-049-91	s	METAL, CHIP 1k 5% 1/10W
R3	1-216-089-91	s	METAL, CHIP 47k 5% 1/10W
R4	1-216-025-91	s	METAL, CHIP 100 5% 1/10W
R5	1-216-025-91	s	METAL, CHIP 100 5% 1/10W
R6	1-216-025-91	s	METAL, CHIP 100 5% 1/10W
R7	1-216-025-91	s	METAL, CHIP 100 5% 1/10W
R10	1-216-089-91	s	METAL, CHIP 47k 5% 1/10W
R11	1-216-089-91	s	METAL, CHIP 47k 5% 1/10W
R12	1-216-049-91	s	METAL, CHIP 1k 5% 1/10W
R13	1-216-061-00	s	METAL, CHIP 3.3k 5% 1/10W
R14	1-216-061-00	s	METAL, CHIP 3.3k 5% 1/10W
R15	1-216-049-91	s	METAL, CHIP 1k 5% 1/10W
R16	1-216-049-91	s	METAL, CHIP 1k 5% 1/10W
R17	1-216-049-91	s	METAL, CHIP 1k 5% 1/10W
R18	1-216-025-91	s	METAL, CHIP 100 5% 1/10W
R19	1-216-025-91	s	METAL, CHIP 100 5% 1/10W
R20	1-216-061-00	s	METAL, CHIP 3.3k 5% 1/10W
R21	1-216-065-91	s	METAL, CHIP 4.7k 5% 1/10W
R22	1-216-304-11	s	METAL, CHIP 3.3 5% 1/10W
R23	1-216-053-00	s	METAL, CHIP 1.5k 5% 1/10W
R24	1-216-067-00	s	METAL, CHIP 5.6k 5% 1/10W
R25	1-216-057-00	s	METAL, CHIP 2.2k 5% 1/10W
R26	1-216-089-91	s	METAL, CHIP 47k 5% 1/10W
R27	1-216-089-91	s	METAL, CHIP 47k 5% 1/10W
R28	1-216-089-91	s	METAL, CHIP 47k 5% 1/10W
R29	1-216-089-91	s	METAL, CHIP 47k 5% 1/10W
R30	1-216-027-00	s	METAL, CHIP 120 5% 1/10W
R31	1-216-027-00	s	METAL, CHIP 120 5% 1/10W
R32	1-216-027-00	s	METAL, CHIP 120 5% 1/10W
R33	1-216-027-00	s	METAL, CHIP 120 5% 1/10W
R34	1-216-027-00	s	METAL, CHIP 120 5% 1/10W
R35	1-216-027-00	s	METAL, CHIP 120 5% 1/10W
R36	1-216-057-00	s	METAL, CHIP 2.2k 5% 1/10W
R37	1-216-089-91	s	METAL, CHIP 47k 5% 1/10W
R38	1-216-089-91	s	METAL, CHIP 47k 5% 1/10W
R39	1-216-089-91	s	METAL, CHIP 47k 5% 1/10W
R40	1-220-221-11	s	METAL, CHIP 100 5% 1/2W
R41	1-216-069-00	s	METAL, CHIP 6.8k 5% 1/10W
R42	1-216-025-91	s	METAL, CHIP 100 5% 1/10W
R43	1-216-025-91	s	METAL, CHIP 100 5% 1/10W
R44	1-216-053-00	s	METAL, CHIP 1.5k 5% 1/10W
R45	1-216-033-00	s	METAL, CHIP 220 5% 1/10W
R46	1-216-055-00	s	METAL, CHIP 1.8k 5% 1/10W
R47	1-216-055-00	s	METAL, CHIP 1.8k 5% 1/10W
R48	1-216-083-00	s	METAL, CHIP 27k 5% 1/10W
R49	1-216-083-00	s	METAL, CHIP 27k 5% 1/10W
R50	1-216-049-91	s	METAL, CHIP 1k 5% 1/10W
R51	1-216-049-91	s	METAL, CHIP 1k 5% 1/10W
R52	1-216-049-91	s	METAL, CHIP 1k 5% 1/10W

(KY-336 BOARD)

Ref. No. or Q'ty	Part No.	SP	Description
R53	1-216-089-91	s	METAL, CHIP 47k 5% 1/10W
R54	1-216-089-91	s	METAL, CHIP 47k 5% 1/10W
R55	1-216-089-91	s	METAL, CHIP 47k 5% 1/10W
R56	1-216-089-91	s	METAL, CHIP 47k 5% 1/10W
R60	1-216-025-91	s	METAL, CHIP 100 5% 1/10W
R61	1-216-025-91	s	METAL, CHIP 100 5% 1/10W
R62	1-216-025-91	s	METAL, CHIP 100 5% 1/10W
R63	1-216-025-91	s	METAL, CHIP 100 5% 1/10W
R64	1-216-025-91	s	METAL, CHIP 100 5% 1/10W
R65	1-216-025-91	s	METAL, CHIP 100 5% 1/10W
R66	1-216-025-91	s	METAL, CHIP 100 5% 1/10W
R67	1-216-025-91	s	METAL, CHIP 100 5% 1/10W
R68	1-216-025-91	s	METAL, CHIP 100 5% 1/10W
R69	1-216-025-91	s	METAL, CHIP 100 5% 1/10W
R70	1-216-025-91	s	METAL, CHIP 100 5% 1/10W
R71	1-216-025-91	s	METAL, CHIP 100 5% 1/10W
R72	1-216-025-91	s	METAL, CHIP 100 5% 1/10W
R73	1-216-025-91	s	METAL, CHIP 100 5% 1/10W
R74	1-216-025-91	s	METAL, CHIP 100 5% 1/10W
R75	1-216-025-91	s	METAL, CHIP 100 5% 1/10W
R76	1-216-025-91	s	METAL, CHIP 100 5% 1/10W
R77	1-216-025-91	s	METAL, CHIP 100 5% 1/10W
R78	1-216-025-91	s	METAL, CHIP 100 5% 1/10W
R79	1-216-025-91	s	METAL, CHIP 100 5% 1/10W
R80	1-216-025-91	s	METAL, CHIP 100 5% 1/10W
R81	1-216-025-91	s	METAL, CHIP 100 5% 1/10W
R82	1-216-025-91	s	METAL, CHIP 100 5% 1/10W
R83	1-216-025-91	s	METAL, CHIP 100 5% 1/10W
R84	1-216-025-91	s	METAL, CHIP 100 5% 1/10W
R85	1-216-025-91	s	METAL, CHIP 100 5% 1/10W
R86	1-216-025-91	s	METAL, CHIP 100 5% 1/10W
R87	1-216-025-91	s	METAL, CHIP 100 5% 1/10W
R88	1-216-025-91	s	METAL, CHIP 100 5% 1/10W
R89	1-216-025-91	s	METAL, CHIP 100 5% 1/10W
R90	1-216-025-91	s	METAL, CHIP 100 5% 1/10W
R91	1-216-025-91	s	METAL, CHIP 100 5% 1/10W
R92	1-216-025-91	s	METAL, CHIP 100 5% 1/10W
R93	1-216-025-91	s	METAL, CHIP 100 5% 1/10W
R94	1-216-025-91	s	METAL, CHIP 100 5% 1/10W
R95	1-216-025-91	s	METAL, CHIP 100 5% 1/10W
R96	1-216-025-91	s	METAL, CHIP 100 5% 1/10W
R97	1-216-025-91	s	METAL, CHIP 100 5% 1/10W
R98	1-216-025-91	s	METAL, CHIP 100 5% 1/10W
R99	1-216-025-91	s	METAL, CHIP 100 5% 1/10W
R100	1-216-025-91	s	METAL, CHIP 100 5% 1/10W
R101	1-216-025-91	s	METAL, CHIP 100 5% 1/10W
R102	1-216-025-91	s	METAL, CHIP 100 5% 1/10W
R103	1-216-025-91	s	METAL, CHIP 100 5% 1/10W
R104	1-216-025-91	s	METAL, CHIP 100 5% 1/10W
R105	1-216-025-91	s	METAL, CHIP 100 5% 1/10W
R106	1-216-025-91	s	METAL, CHIP 100 5% 1/10W
R107	1-216-025-91	s	METAL, CHIP 100 5% 1/10W
R108	1-216-025-91	s	METAL, CHIP 100 5% 1/10W
R109	1-216-025-91	s	METAL, CHIP 100 5% 1/10W
R110	1-216-025-91	s	METAL, CHIP 100 5% 1/10W
R111	1-216-089-91	s	METAL, CHIP 47k 5% 1/10W
R112	1-216-089-91	s	METAL, CHIP 47k 5% 1/10W
R113	1-216-089-91	s	METAL, CHIP 47k 5% 1/10W
R114	1-216-089-91	s	METAL, CHIP 47k 5% 1/10W

(KY-336 BOARD)

Ref. No. or Q'ty	Part No.	SP	Description
R115	1-216-089-91	s	METAL, CHIP 47k 5% 1/10W
R116	1-216-089-91	s	METAL, CHIP 47k 5% 1/10W
R117	1-216-089-91	s	METAL, CHIP 47k 5% 1/10W
R118	1-216-089-91	s	METAL, CHIP 47k 5% 1/10W
R119	1-216-089-91	s	METAL, CHIP 47k 5% 1/10W
R120	1-216-089-91	s	METAL, CHIP 47k 5% 1/10W
R121	1-216-089-91	s	METAL, CHIP 47k 5% 1/10W
R122	1-216-089-91	s	METAL, CHIP 47k 5% 1/10W
R123	1-216-089-91	s	METAL, CHIP 47k 5% 1/10W
R124	1-216-089-91	s	METAL, CHIP 47k 5% 1/10W
R125	1-216-089-91	s	METAL, CHIP 47k 5% 1/10W
RV1	1-225-359-11	s	RES, VAR CARBON 5k/20k
RV2	1-225-359-11	s	RES, VAR CARBON 5k/20k
RV3	1-225-359-11	s	RES, VAR CARBON 5k/20k
RV4	1-225-359-11	s	RES, VAR CARBON 5k/20k
S1	1-692-892-11	s	SWITCH, PUSH
S2	1-692-890-31	s	SWITCH, PUSH
S3	1-692-890-21	s	SWITCH, PUSH
S4	1-692-890-41	s	SWITCH, PUSH
S5	1-692-892-21	s	SWITCH, PUSH
S6	1-692-891-21	s	SWITCH, PUSH
S7	1-571-977-11	s	SWITCH, PUSH
S8	1-571-977-11	s	SWITCH, PUSH
S9	1-571-977-11	s	SWITCH, PUSH
S10	1-571-977-11	s	SWITCH, PUSH
S11	1-571-977-11	s	SWITCH, PUSH
S12	1-762-832-11	s	SWITCH, SLIDE
S13	1-571-977-11	s	SWITCH, PUSH
T1	1-429-856-11	s	TRANSFORMER, POWER
TP1	1-535-881-21	o	TERMINAL, TP
X1	1-579-175-11	s	RESONATOR, CERAMIC 10.00MHz

MB-712 BOARD

The parts marked * are different, depending on the product serial numbers, as shown below:

*1) Serial number; 10431 and higher (For DSR-80 J)
Serial number; 10471 and higher (For DSR-80 UC)
Serial number; 10321 and higher (For DSR-80P CE)

*2) Serial number; 10001 through 10980 (For DSR-80 J)
Serial number; 10001 through 12050 (For DSR-80 UC)
Serial number; 10001 through 11810 (For DSR-80P CE)

*3) Serial number; 10981 and higher (For DSR-80 J)
Serial number; 12051 and higher (For DSR-80 UC)
Serial number; 11811 and higher (For DSR-80P CE)
Serial number; 10001 and higher (For DSR-80P UC)

Ref. No. or Q'ty	Part No.	SP	Description	
1pc	A-8312-899-A	o	MOUNTED CIRCUIT BOARD, MB-712	
C1	1-163-235-11	s	CERAMIC, CHIP 22pF 5% 50V	
C2	1-124-589-11	s	ELECT 47uF 20% 16V	
C3	1-124-589-11	s	ELECT 47uF 20% 16V	
C4	1-126-967-11	s	ELECT 47uF 20% 50V	*2)
	1-124-589-11	s	ELECT 47uF 20% 16V	*3)
C5	1-163-235-11	s	CERAMIC, CHIP 22pF 5% 50V	
C6	1-126-967-11	s	ELECT 47uF 20% 50V	*2)
	1-124-589-11	s	ELECT 47uF 20% 16V	*3)
C8	1-126-967-11	s	ELECT 47uF 20% 50V	*2)
	1-124-589-11	s	ELECT 47uF 20% 16V	*3)
C101	1-164-004-11	s	CERAMIC, CHIP 0.1uF 10% 25V	
C102	1-126-933-11	s	ELECT 100uF 20% 16V	
C103	1-164-004-11	s	CERAMIC, CHIP 0.1uF 10% 25V	
C104	1-126-934-11	s	ELECT 220uF 20% 16V	
C105	1-164-004-11	s	CERAMIC, CHIP 0.1uF 10% 25V	
C106	1-104-665-11	s	ELECT 100uF 20% 25V	
C107	1-164-004-11	s	CERAMIC, CHIP 0.1uF 10% 25V	
C108	1-104-665-11	s	ELECT 100uF 20% 25V	
C109	1-164-004-11	s	CERAMIC, CHIP 0.1uF 10% 25V	
C110	1-126-934-11	s	ELECT 220uF 20% 16V	
C111	1-164-004-11	s	CERAMIC, CHIP 0.1uF 10% 25V	
C112	1-164-004-11	s	CERAMIC, CHIP 0.1uF 10% 25V	
C113	1-126-934-11	s	ELECT 220uF 20% 16V	
C114	1-164-004-11	s	CERAMIC, CHIP 0.1uF 10% 25V	
C115	1-164-004-11	s	CERAMIC, CHIP 0.1uF 10% 25V	
C116	1-126-933-11	s	ELECT 100uF 20% 16V	
C117	1-126-967-11	s	ELECT 47uF 20% 50V	*2)
	1-124-589-11	s	ELECT 47uF 20% 16V	*3)
C118	1-126-967-11	s	ELECT 47uF 20% 50V	*2)
	1-124-589-11	s	ELECT 47uF 20% 16V	*3)
C119	1-126-935-11	s	ELECT 470uF 20% 16V	
CN116	1-778-259-11	o	CONNECTOR, BB 148P, FEMALE	
CN503	1-565-189-11	s	CONNECTOR, FPC 36P	
CN505	1-562-708-11	o	CONNECTOR, FPC 13P, FEMALE	
CN506	1-565-189-11	s	CONNECTOR, FPC 36P	
CN601	1-766-792-11	o	CONNECTOR, BB 12P, FEMALE	
CN602	1-766-792-11	o	CONNECTOR, BB 12P, FEMALE	
CN603	1-766-792-11	o	CONNECTOR, BB 12P, FEMALE	
CN604	1-766-792-11	o	CONNECTOR, BB 12P, FEMALE	

(MB-712 BOARD)

Ref. No. or Q'ty	Part No.	SP	Description	
CN605	1-766-792-11	o	CONNECTOR, BB 12P, FEMALE	
CN606	1-766-792-11	o	CONNECTOR, BB 12P, FEMALE	
CN607	1-764-259-11	s	CONNECTOR, D-SUB 15P, FEMALE	
CN608	1-573-566-11	s	CONNECTOR, D-SUB 9P, FEMALE	
CN609	1-564-002-11	s	CONNECTOR 3P, MALE	
CN701	1-506-477-11	s	CONNECTOR 12P, MALE	
CN702	1-565-189-11	s	CONNECTOR, FPC 36P	
CN703	1-766-791-11	o	CONNECTOR, BB 10P, FEMALE	
CN801	1-563-853-11	o	CONNECTOR, FPC 22P	
CN802	1-563-853-11	o	CONNECTOR, FPC 22P	
CN903	1-691-757-11	o	CONNECTOR, BB 8P, MALE	
CN904	1-766-176-11	o	CONNECTOR, BB 6P, MALE	
FL1	1-233-314-11	s	FILTER, NOISE, CHIP	
FL2	1-233-314-11	s	FILTER, NOISE, CHIP	
FL3	1-233-314-11	s	FILTER, NOISE, CHIP	
FL4	1-233-314-11	s	FILTER, NOISE, CHIP	
FL5	1-233-314-11	s	FILTER, NOISE, CHIP	
FL6	1-233-314-11	s	FILTER, NOISE, CHIP	
FL7	1-233-314-11	s	FILTER, NOISE, CHIP	
FL8	1-233-314-11	s	FILTER, NOISE, CHIP	
IC1	8-759-173-37	s	IC L79M09T-TL	
IC2	8-759-172-41	s	IC L78M09T-TL	
IC3	8-759-745-64	s	IC NJM4560M	
Q1	8-729-202-38	s	TRANSISTOR 2SC3326N	
Q2	8-729-202-38	s	TRANSISTOR 2SC3326N	
Q3	8-729-202-38	s	TRANSISTOR 2SC3326N	
Q4	8-729-027-38	s	TRANSISTOR DTA144EKA-T146	
Q5	8-729-027-38	s	TRANSISTOR DTA144EKA-T146	
Q6	8-729-202-38	s	TRANSISTOR 2SC3326N	*2)
Q7	8-729-202-38	s	TRANSISTOR 2SC3326N	*2)
R1	1-216-073-00	s	METAL, CHIP 10k 5% 1/10W	
R2	1-216-071-00	s	METAL, CHIP 8.2k 5% 1/10W	
R3	1-216-017-91	s	METAL, CHIP 47 5% 1/10W	
R4	1-216-049-91	s	METAL, CHIP 1k 5% 1/10W	
R5	1-216-073-00	s	METAL, CHIP 10k 5% 1/10W	
R6	1-216-073-00	s	METAL, CHIP 10k 5% 1/10W	
R7	1-216-073-00	s	METAL, CHIP 10k 5% 1/10W	
R8	1-216-071-00	s	METAL, CHIP 8.2k 5% 1/10W	
R9	1-216-017-91	s	METAL, CHIP 47 5% 1/10W	
R10	1-216-049-91	s	METAL, CHIP 1k 5% 1/10W	
R11	1-216-073-00	s	METAL, CHIP 10k 5% 1/10W	
R12	1-216-073-00	s	METAL, CHIP 10k 5% 1/10W	
R13	1-216-073-00	s	METAL, CHIP 10k 5% 1/10W	
R14	1-216-073-00	s	METAL, CHIP 10k 5% 1/10W	
R16	1-216-073-00	s	METAL, CHIP 10k 5% 1/10W	
R17	1-216-073-00	s	METAL, CHIP 10k 5% 1/10W	
R18	1-216-073-00	s	METAL, CHIP 10k 5% 1/10W	*2)

MS-43 BOARD

Ref. No. or Q'ty	Part No.	SP	Description
1pc	A-8312-024-A	o	MOUNTED CIRCUIT BOARD, MS-43
C1	1-163-038-91	s	CERAMIC, CHIP 0.1uF 25V
C2	1-163-038-91	s	CERAMIC, CHIP 0.1uF 25V
C3	1-163-038-91	s	CERAMIC, CHIP 0.1uF 25V
C9	1-163-133-00	s	CERAMIC, CHIP 470pF 5% 50V
C10	1-163-133-00	s	CERAMIC, CHIP 470pF 5% 50V
C11	1-163-038-91	s	CERAMIC, CHIP 0.1uF 25V
C12	1-126-960-11	s	ELECT 1uF 20% 50V
C13	1-163-021-91	s	CERAMIC, CHIP 0.01uF 10% 50V
C14	1-163-021-91	s	CERAMIC, CHIP 0.01uF 10% 50V
C15	1-163-275-11	s	CERAMIC, CHIP 0.001uF 5% 50V
C16	1-163-275-11	s	CERAMIC, CHIP 0.001uF 5% 50V
C101	1-126-396-11	s	ELECT, CHIP 47uF 20% 16V
C102	1-163-038-91	s	CERAMIC, CHIP 0.1uF 25V
C103	1-163-275-11	s	CERAMIC, CHIP 0.001uF 5% 50V
C104	1-163-038-91	s	CERAMIC, CHIP 0.1uF 25V
C105	1-163-038-91	s	CERAMIC, CHIP 0.1uF 25V
C106	1-163-275-11	s	CERAMIC, CHIP 0.001uF 5% 50V
C107	1-163-021-91	s	CERAMIC, CHIP 0.01uF 10% 50V
C108	1-163-275-11	s	CERAMIC, CHIP 0.001uF 5% 50V
C109	1-115-340-11	s	CERAMIC, CHIP 0.22uF 10% 25V
C111	1-115-340-11	s	CERAMIC, CHIP 0.22uF 10% 25V
C112	1-163-021-91	s	CERAMIC, CHIP 0.01uF 10% 50V
C113	1-126-403-11	s	ELECT 3.3uF 20% 50V
C114	1-115-340-11	s	CERAMIC, CHIP 0.22uF 10% 25V
C115	1-126-396-11	s	ELECT, CHIP 47uF 20% 16V
C116	1-163-038-91	s	CERAMIC, CHIP 0.1uF 25V
C117	1-163-038-91	s	CERAMIC, CHIP 0.1uF 25V
C118	1-164-505-11	s	CERAMIC, CHIP 2.2uF 16V
C201	1-163-038-91	s	CERAMIC, CHIP 0.1uF 25V
C202	1-163-037-11	s	CERAMIC, CHIP 0.022uF 10% 25V
C203	1-163-038-91	s	CERAMIC, CHIP 0.1uF 25V
C204	1-163-038-91	s	CERAMIC, CHIP 0.1uF 25V
C205	1-163-038-91	s	CERAMIC, CHIP 0.1uF 25V
C206	1-163-038-91	s	CERAMIC, CHIP 0.1uF 25V
C207	1-163-038-91	s	CERAMIC, CHIP 0.1uF 25V
C208	1-126-396-11	s	ELECT, CHIP 47uF 20% 16V
C209	1-163-038-91	s	CERAMIC, CHIP 0.1uF 25V
C210	1-163-038-91	s	CERAMIC, CHIP 0.1uF 25V
C211	1-163-038-91	s	CERAMIC, CHIP 0.1uF 25V
C212	1-163-251-11	s	CERAMIC, CHIP 100pF 5% 50V
C213	1-163-251-11	s	CERAMIC, CHIP 100pF 5% 50V
CN201	1-764-129-11	s	CONNECTOR, FPC 15P
CN202	1-764-129-11	s	CONNECTOR, FPC 15P
CN203	1-565-189-11	s	CONNECTOR, FPC 36P
CN204	1-563-140-11	s	CONNECTOR 9P, FEMALE
CN205	1-778-663-11	o	CONNECTOR, BB 6P, FEMALE
CN206	1-565-189-11	s	CONNECTOR, FPC 36P
CN207	1-766-716-11	o	CONNECTOR, BB 3P, MALE
CN208	1-691-395-11	s	CONNECTOR, FPC 6P
CN209	1-563-140-11	s	SOCKET, CONNECTOR 9P
CN210	1-506-467-11	s	CONNECTOR 2P, MALE
CN211	1-564-004-11	o	CONNECTOR 5P, MALE
CN212	1-766-723-11	s	CONNECTOR, BB 3P, FEMALE
CN221	1-566-767-11	s	CONNECTOR 12P, MALE
D1	8-719-938-07	s	LED GL480, INFRARED
D2	8-719-938-07	s	LED GL480, INFRARED

(MS-43 BOARD)

Ref. No. or Q'ty	Part No.	SP	Description
D101	8-719-800-76	s	LED 1SS226
IC1	8-759-469-25	s	IC AK6440AF-E2
IC2	8-759-700-07	s	IC NJM2903M
IC101	8-759-288-80	s	IC TA8424F(TP2)
IC102	8-759-106-02	s	IC UPC4570G2
IC103	8-759-106-02	s	IC UPC4570G2
IC104	8-759-700-07	s	IC NJM2903M
IC201	8-759-106-02	s	IC UPC4570G2
IC202	8-759-399-64	s	IC LB1857M-TE-L
Q1	8-729-903-81	s	PHOTO TRANSISTOR PT480
Q2	8-729-903-81	s	PHOTO TRANSISTOR PT480
R1	1-216-628-11	s	METAL, CHIP 110 0.5% 1/10W
R3	1-216-031-00	s	METAL, CHIP 180 5% 1/10W
R4	1-216-628-11	s	METAL, CHIP 110 0.5% 1/10W
R5	1-216-089-91	s	METAL, CHIP 47k 5% 1/10W
R6	1-216-089-91	s	METAL, CHIP 47k 5% 1/10W
R7	1-216-089-91	s	METAL, CHIP 47k 5% 1/10W
R8	1-216-089-91	s	METAL, CHIP 47k 5% 1/10W
R10	1-216-295-91	s	RES, CHIP 0
R11	1-216-295-91	s	RES, CHIP 0
R14	1-216-065-91	s	METAL, CHIP 4.7k 5% 1/10W
R15	1-216-065-91	s	METAL, CHIP 4.7k 5% 1/10W
R16	1-216-121-91	s	METAL, CHIP 1M 5% 1/10W
R17	1-216-121-91	s	METAL, CHIP 1M 5% 1/10W
R18	1-216-073-00	s	METAL, CHIP 10k 5% 1/10W
R19	1-216-073-00	s	METAL, CHIP 10k 5% 1/10W
R20	1-216-065-91	s	METAL, CHIP 4.7k 5% 1/10W
R21	1-216-035-00	s	METAL, CHIP 270 5% 1/10W
R22	1-216-065-91	s	METAL, CHIP 4.7k 5% 1/10W
R23	1-216-097-91	s	METAL, CHIP 100k 5% 1/10W
R24	1-216-097-91	s	METAL, CHIP 100k 5% 1/10W
R25	1-216-672-11	s	METAL, CHIP 7.5k 0.5% 1/10W
R26	1-216-670-11	s	METAL, CHIP 6.2k 0.5% 1/10W
R27	1-216-675-11	s	METAL, CHIP 10k 0.5% 1/10W
R101	1-216-111-00	s	METAL 390k 5% 1/10W
R102	1-216-097-91	s	METAL, CHIP 100k 5% 1/10W
R103	1-216-295-91	s	RES, CHIP 0
R104	1-216-109-00	s	METAL, CHIP 330k 5% 1/10W
R105	1-220-230-11	s	METAL, CHIP 2.2 10% 1/4W
R106	1-220-230-11	s	METAL, CHIP 2.2 10% 1/4W
R107	1-220-230-11	s	METAL, CHIP 2.2 10% 1/4W
R108	1-220-230-11	s	METAL, CHIP 2.2 10% 1/4W
R109	1-216-089-91	s	METAL, CHIP 47k 5% 1/10W
R110	1-220-231-11	s	METAL, CHIP 2.7 10% 1/4W
R111	1-220-230-11	s	METAL, CHIP 2.2 10% 1/4W
R113	1-216-031-00	s	METAL, CHIP 180 5% 1/10W
R114	1-216-073-00	s	METAL, CHIP 10k 5% 1/10W
R115	1-216-049-91	s	METAL, CHIP 1k 5% 1/10W
R116	1-220-231-11	s	METAL, CHIP 2.7 10% 1/4W
R117	1-216-089-91	s	METAL, CHIP 47k 5% 1/10W
R119	1-216-073-00	s	METAL, CHIP 10k 5% 1/10W
R120	1-220-231-11	s	METAL, CHIP 2.7 10% 1/4W
R121	1-216-027-00	s	METAL, CHIP 120 5% 1/10W
R123	1-216-025-91	s	METAL, CHIP 100 5% 1/10W
R124	1-216-025-91	s	METAL, CHIP 100 5% 1/10W
R125	1-216-097-91	s	METAL, CHIP 100k 5% 1/10W
R126	1-216-101-00	s	METAL, CHIP 150k 5% 1/10W

(MS-43 BOARD)

Ref. No. or Q'ty	Part No.	SP	Description
R127	1-216-089-91	s	METAL, CHIP 47k 5% 1/10W
R128	1-216-089-91	s	METAL, CHIP 47k 5% 1/10W
R129	1-216-065-91	s	METAL, CHIP 4.7k 5% 1/10W
R130	1-216-113-00	s	METAL, CHIP 470k 5% 1/10W
R131	1-216-097-91	s	METAL, CHIP 100k 5% 1/10W
R201	1-216-089-91	s	METAL, CHIP 47k 5% 1/10W
R202	1-216-691-11	s	METAL, CHIP 47k 0.5% 1/10W
R203	1-216-691-11	s	METAL, CHIP 47k 0.5% 1/10W
R204	1-216-675-11	s	METAL, CHIP 10k 0.5% 1/10W
R205	1-216-675-11	s	METAL, CHIP 10k 0.5% 1/10W
R206	1-216-073-00	s	METAL, CHIP 10k 5% 1/10W
R207	1-218-760-11	s	METAL, CHIP 220k 0.50% 1/10W
R208	1-218-760-11	s	METAL, CHIP 220k 0.50% 1/10W
R209	1-216-085-00	s	METAL, CHIP 33k 5% 1/10W
R210	1-216-073-00	s	METAL, CHIP 10k 5% 1/10W
R211	1-216-308-00	s	METAL, CHIP 4.7 5% 1/10W
R212	1-216-308-00	s	METAL, CHIP 4.7 5% 1/10W
R213	1-216-308-00	s	METAL, CHIP 4.7 5% 1/10W
R214	1-216-031-00	s	METAL, CHIP 180 5% 1/10W
TH1	1-809-357-21	s	THERMISTOR, CHIP 10k

PRE-34 BOARD

Ref. No. or Q'ty	Part No.	SP	Description	

The parts marked * are different, depending on the product serial numbers, as shown below:

*1) Serial number; 10031 and higher (For DSR-80 J)
Serial number; 10031 and higher (For DSR-80 UC)
Serial number; 10041 and higher (For DSR-80P CE)

*2) Serial number; 10031 through 10430 (For DSR-80 J)
Serial number; 10031 through 10430 (For DSR-80 UC)
Serial number; 10041 through 10320 (For DSR-80P CE)

*3) Serial number; 10001 through 10430 (For DSR-80 J)
Serial number; 10001 through 10470 (For DSR-80 UC)
Serial number; 10001 through 10320 (For DSR-80P CE)

*4) Serial number; 10431 and higher (For DSR-80 J)
Serial number; 10471 and higher (For DSR-80 UC)
Serial number; 10321 and higher (For DSR-80P CE)
Serial number; 10001 and higher (For DSR-80P UC)

Ref. No. or Q'ty	Part No.	SP	Description	
1pc	A-8315-287-A	s	MOUNTED CIRCUIT BOARD, PRE-34	
C101	1-163-021-91	s	CERAMIC, CHIP 0.01uF 10% 50V	
C102	1-163-021-91	s	CERAMIC, CHIP 0.01uF 10% 50V	
C103	1-163-038-91	s	CERAMIC, CHIP 0.1uF 25V	
C104	1-104-851-11	s	TANTALUM, CHIP 10uF 20% 10V	
C105	1-163-038-91	s	CERAMIC, CHIP 0.1uF 25V	
C106	1-162-294-31	s	CERAMIC, CHIP 0.001uF 10% 50V	*3)
	1-163-275-11	s	CERAMIC, CHIP 0.001uF 5% 50V	*4)
C107	1-163-021-91	s	CERAMIC, CHIP 0.01uF 10% 50V	
C108	1-163-038-91	s	CERAMIC, CHIP 0.1uF 25V	
C109	1-163-275-11	s	CERAMIC, CHIP 0.001uF 5% 50V	
C110	1-163-038-91	s	CERAMIC, CHIP 0.1uF 25V	
C111	1-163-021-91	s	CERAMIC, CHIP 0.01uF 10% 50V	
C112	1-163-021-91	s	CERAMIC, CHIP 0.01uF 10% 50V	
C114	1-104-851-11	s	TANTALUM, CHIP 10uF 20% 10V	
C115	1-163-038-91	s	CERAMIC, CHIP 0.1uF 25V	
C116	1-163-038-91	s	CERAMIC, CHIP 0.1uF 25V	
C117	1-104-851-11	s	TANTALUM, CHIP 10uF 20% 10V	
C120	1-163-038-91	s	CERAMIC, CHIP 0.1uF 25V	
C121	1-104-851-11	s	TANTALUM, CHIP 10uF 20% 10V	
C122	1-163-251-11	s	CERAMIC, CHIP 100pF 5% 50V	
C123	1-163-038-91	s	CERAMIC, CHIP 0.1uF 25V	
C125	1-163-038-91	s	CERAMIC, CHIP 0.1uF 25V	
C126	1-163-038-91	s	CERAMIC, CHIP 0.1uF 25V	
C130	1-164-161-11	s	CERAMIC, CHIP 0.0022uF 10% 100V	
C131	1-104-851-11	s	TANTALUM, CHIP 10uF 20% 10V	
C132	1-104-851-11	s	TANTALUM, CHIP 10uF 20% 10V	
C201	1-104-851-11	s	TANTALUM, CHIP 10uF 20% 10V	
C202	1-163-038-91	s	CERAMIC, CHIP 0.1uF 25V	
C203	1-163-021-91	s	CERAMIC, CHIP 0.01uF 10% 50V	
C204	1-104-851-11	s	TANTALUM, CHIP 10uF 20% 10V	
C205	1-163-038-91	s	CERAMIC, CHIP 0.1uF 25V	
C206	1-163-021-91	s	CERAMIC, CHIP 0.01uF 10% 50V	
C207	1-163-099-00	s	CERAMIC, CHIP 18pF 5% 50V	
C208	1-163-038-91	s	CERAMIC, CHIP 0.1uF 25V	
C301	1-163-038-91	s	CERAMIC, CHIP 0.1uF 25V	
C302	1-163-038-91	s	CERAMIC, CHIP 0.1uF 25V	
C303	1-163-038-91	s	CERAMIC, CHIP 0.1uF 25V	
C304	1-163-038-91	s	CERAMIC, CHIP 0.1uF 25V	
C307	1-163-038-91	s	CERAMIC, CHIP 0.1uF 25V	
C308	1-163-038-91	s	CERAMIC, CHIP 0.1uF 25V	
C309	1-163-038-91	s	CERAMIC, CHIP 0.1uF 25V	
C310	1-163-038-91	s	CERAMIC, CHIP 0.1uF 25V	

(PRE-34 BOARD)

Ref. No. or Q'ty	Part No.	SP	Description	
C311	1-163-038-91	s	CERAMIC, CHIP 0.1uF 25V	
C312	1-163-038-91	s	CERAMIC, CHIP 0.1uF 25V	
C313	1-163-038-91	s	CERAMIC, CHIP 0.1uF 25V	
C315	1-104-851-11	s	TANTALUM, CHIP 10uF 20% 10V	
C316	1-163-038-91	s	CERAMIC, CHIP 0.1uF 25V	
C317	1-163-038-91	s	CERAMIC, CHIP 0.1uF 25V	
C318	1-163-038-91	s	CERAMIC, CHIP 0.1uF 25V	
C319	1-163-038-91	s	CERAMIC, CHIP 0.1uF 25V	
C320	1-163-038-91	s	CERAMIC, CHIP 0.1uF 25V	
C321	1-163-038-91	s	CERAMIC, CHIP 0.1uF 25V	
C322	1-163-021-91	s	CERAMIC, CHIP 0.01uF 10% 50V	
C325	1-104-851-11	s	TANTALUM, CHIP 10uF 20% 10V	
C326	1-163-038-91	s	CERAMIC, CHIP 0.1uF 25V	
C327	1-163-038-91	s	CERAMIC, CHIP 0.1uF 25V	
C328	1-104-823-11	s	TANTALUM, CHIP 47uF 20% 16V	
C329	1-104-823-11	s	TANTALUM, CHIP 47uF 20% 16V	
C330	1-104-851-11	s	TANTALUM, CHIP 10uF 20% 10V	*1)
C331	1-163-038-91	s	CERAMIC, CHIP 0.1uF 25V	*1)
C332	1-163-222-11	s	CERAMIC, CHIP 5pF 50V	
C333	1-163-222-11	s	CERAMIC, CHIP 5pF 50V	
CN1	1-750-505-11	s	CONNECTOR, FPC 18P	
CN2	1-563-853-11	o	CONNECTOR, FPC 22P	
CN3	1-563-853-11	o	CONNECTOR, FPC 22P	
D102	8-719-052-27	s	DIODE 1SS351-TB	
D201	8-719-052-27	s	DIODE 1SS351-TB	
IC101	8-752-067-87	s	IC CXA1760Q	
IC103	8-759-524-50	s	IC TC74VHC541FT(EL)	
IC201	8-752-067-87	s	IC CXA1760Q	
IC302	8-759-259-77	s	IC PQ20VZ5U	
L101	1-412-390-21	s	INDUCTOR, CHIP 0uH	
L102	1-412-390-21	s	INDUCTOR, CHIP 0uH	
L103	1-414-398-11	s	INDUCTOR, CHIP 10uH	
L104	1-414-398-11	s	INDUCTOR, CHIP 10uH	
L105	1-414-398-11	s	INDUCTOR, CHIP 10uH	
L106	1-414-398-11	s	INDUCTOR, CHIP 10uH	
L107	1-414-398-11	s	INDUCTOR, CHIP 10uH	*2)
L108	1-414-396-21	s	INDUCTOR, CHIP 4.7uH	*4)
L109	1-414-396-21	s	INDUCTOR, CHIP 4.7uH	*4)
L201	1-414-398-11	s	INDUCTOR, CHIP 10uH	
L202	1-414-398-11	s	INDUCTOR, CHIP 10uH	
L301	1-414-404-11	s	INDUCTOR 100uH	
L302	1-414-404-11	s	INDUCTOR 100uH	
L303	1-414-404-11	s	INDUCTOR 100uH	
L304	1-414-404-11	s	INDUCTOR 100uH	
L309	1-414-398-11	s	INDUCTOR, CHIP 10uH	
L310	1-414-398-11	s	INDUCTOR, CHIP 10uH	
L311	1-409-556-11	s	COIL, CHOKE 47uH	
L370	1-414-398-11	s	INDUCTOR, CHIP 10uH	
PS101	⚠ 1-533-282-21	s	LINK, IC, CHIP 2A	
PS102	⚠ 1-533-282-21	s	LINK, IC, CHIP 2A	
PS103	⚠ 1-533-282-21	s	LINK, IC, CHIP 2A	
PS104	⚠ 1-533-282-21	s	LINK, IC, CHIP 2A	
Q102	8-729-112-65	s	TRANSISTOR 2SA1462	
Q103	8-729-141-48	s	TRANSISTOR 2SB624-BV345	
Q104	8-729-112-65	s	TRANSISTOR 2SA1462	
Q105	8-729-202-38	s	TRANSISTOR 2SC3326N	
Q106	8-729-112-65	s	TRANSISTOR 2SA1462	*4)

(PRE-34 BOARD)

Ref. No. or Q'ty	Part No.	SP	Description	
Q107	8-729-141-48	s	TRANSISTOR 2SB624-BV345	
Q301	8-729-034-25	s	TRANSISTOR 2SK322WQTL	
Q302	8-729-034-25	s	TRANSISTOR 2SK322WQTL	
Q303	8-729-034-25	s	TRANSISTOR 2SK322WQTL	
Q304	8-729-034-25	s	TRANSISTOR 2SK322WQTL	
Q308	8-729-120-28	s	TRANSISTOR 2SC1623-L5L6	
Q309	8-729-120-28	s	TRANSISTOR 2SC1623-L5L6	
Q321	8-729-140-63	s	TRANSISTOR 2SA1611-M5M6	
Q322	8-729-140-63	s	TRANSISTOR 2SA1611-M5M6	
Q323	8-729-140-63	s	TRANSISTOR 2SA1611-M5M6	
Q324	8-729-140-63	s	TRANSISTOR 2SA1611-M5M6	
Q351	8-729-034-25	s	TRANSISTOR 2SK322WQTL	
Q352	8-729-034-25	s	TRANSISTOR 2SK322WQTL	
Q353	8-729-034-25	s	TRANSISTOR 2SK322WQTL	
Q354	8-729-034-25	s	TRANSISTOR 2SK322WQTL	
Q358	8-729-120-28	s	TRANSISTOR 2SC1623-L5L6	
Q359	8-729-120-28	s	TRANSISTOR 2SC1623-L5L6	
R101	1-216-295-91	s	RES, CHIP 0	*3)
R102	1-216-295-91	s	RES, CHIP 0	*3)
R103	1-216-295-91	s	RES, CHIP 0	
R104	1-216-065-91	s	METAL, CHIP 4.7k 5% 1/10W	
R105	1-216-065-91	s	METAL, CHIP 4.7k 5% 1/10W	
R106	1-216-075-00	s	METAL, CHIP 12k 5% 1/10W	
R107	1-216-075-00	s	METAL, CHIP 12k 5% 1/10W	
R108	1-216-069-00	s	METAL, CHIP 6.8k 5% 1/10W	
R109	1-216-061-00	s	METAL, CHIP 3.3k 5% 1/10W	
R111	1-216-635-11	s	METAL, CHIP 220 0.5% 1/10W	
R113	1-216-077-00	s	METAL, CHIP 15k 5% 1/10W	
R115	1-216-045-00	s	METAL, CHIP 680 5% 1/10W	
R116	1-216-655-11	s	METAL, CHIP 1.5k 0.5% 1/10W	
R117	1-216-677-11	s	METAL, CHIP 12k 0.5% 1/10W	
R118	1-216-073-00	s	METAL, CHIP 10k 5% 1/10W	
R119	1-216-067-00	s	METAL, CHIP 5.6k 5% 1/10W	
R120	1-216-073-00	s	METAL, CHIP 10k 5% 1/10W	
R121	1-216-037-00	s	METAL, CHIP 330 5% 1/10W	
R122	1-216-039-00	s	METAL, CHIP 390 5% 1/10W	
R123	1-216-295-91	s	RES, CHIP 0	
R127	1-216-617-11	s	METAL, CHIP 39 0.50% 1/10W	
R128	1-216-603-11	s	METAL, CHIP 10 0.5% 1/10W	
R129	1-216-627-11	s	METAL, CHIP 100 0.5% 1/10W	
R130	1-216-298-00	s	METAL, CHIP 2.2 5% 1/10W	*4)
R131	1-216-298-00	s	METAL, CHIP 2.2 5% 1/10W	*4)
R201	1-216-037-00	s	METAL, CHIP 330 5% 1/10W	
R202	1-216-039-00	s	METAL, CHIP 390 5% 1/10W	
R203	1-216-658-11	s	METAL, CHIP 2k 0.5% 1/10W	
R204	1-216-067-00	s	METAL, CHIP 5.6k 5% 1/10W	
R205	1-216-073-00	s	METAL, CHIP 10k 5% 1/10W	
R206	1-216-045-00	s	METAL, CHIP 680 5% 1/10W	
R208	1-216-077-00	s	METAL, CHIP 15k 5% 1/10W	
R210	1-216-065-91	s	METAL, CHIP 4.7k 5% 1/10W	
R211	1-216-075-00	s	METAL, CHIP 12k 5% 1/10W	
R212	1-216-065-91	s	METAL, CHIP 4.7k 5% 1/10W	
R213	1-216-075-00	s	METAL, CHIP 12k 5% 1/10W	
R214	1-216-295-91	s	RES, CHIP 0	*3)
R215	1-216-295-91	s	RES, CHIP 0	*3)
R221	1-216-295-91	s	RES, CHIP 0	*4)
R222	1-216-295-91	s	RES, CHIP 0	*4)
R301	1-216-049-91	s	METAL, CHIP 1k 5% 1/10W	

(PRE-34 BOARD)

Ref. No. or Q'ty	Part No.	SP	Description	
R302	1-216-049-91	s	METAL, CHIP 1k 5% 1/10W	
R303	1-216-023-00	s	METAL, CHIP 82 5% 1/10W	
R304	1-216-023-00	s	METAL, CHIP 82 5% 1/10W	
R305	1-216-023-00	s	METAL, CHIP 82 5% 1/10W	
R306	1-216-023-00	s	METAL, CHIP 82 5% 1/10W	
R311	1-216-041-00	s	METAL, CHIP 470 5% 1/10W	
R312	1-216-033-00	s	METAL, CHIP 220 5% 1/10W	
R313	1-216-033-00	s	METAL, CHIP 220 5% 1/10W	
R314	1-216-041-00	s	METAL, CHIP 470 5% 1/10W	
R315	1-216-059-00	s	METAL, CHIP 2.7k 5% 1/10W	
R316	1-216-053-00	s	METAL, CHIP 1.5k 5% 1/10W	
R321	1-216-025-91	s	METAL, CHIP 100 5% 1/10W	
R322	1-216-025-91	s	METAL, CHIP 100 5% 1/10W	
R323	1-216-049-91	s	METAL, CHIP 1k 5% 1/10W	
R324	1-216-049-91	s	METAL, CHIP 1k 5% 1/10W	
R325	1-216-295-91	s	RES, CHIP 0	*3)
R326	1-216-029-00	s	METAL, CHIP 150 5% 1/10W	
R327	1-216-029-00	s	METAL, CHIP 150 5% 1/10W	
R351	1-216-049-91	s	METAL, CHIP 1k 5% 1/10W	
R352	1-216-049-91	s	METAL, CHIP 1k 5% 1/10W	
R353	1-216-023-00	s	METAL, CHIP 82 5% 1/10W	
R354	1-216-023-00	s	METAL, CHIP 82 5% 1/10W	
R355	1-216-023-00	s	METAL, CHIP 82 5% 1/10W	
R356	1-216-023-00	s	METAL, CHIP 82 5% 1/10W	
R361	1-216-041-00	s	METAL, CHIP 470 5% 1/10W	
R362	1-216-033-00	s	METAL, CHIP 220 5% 1/10W	
R363	1-216-033-00	s	METAL, CHIP 220 5% 1/10W	
R364	1-216-041-00	s	METAL, CHIP 470 5% 1/10W	
R365	1-216-059-00	s	METAL, CHIP 2.7k 5% 1/10W	
R366	1-216-053-00	s	METAL, CHIP 1.5k 5% 1/10W	
R371	1-216-025-91	s	METAL, CHIP 100 5% 1/10W	
R372	1-216-025-91	s	METAL, CHIP 100 5% 1/10W	
R373	1-216-049-91	s	METAL, CHIP 1k 5% 1/10W	
R374	1-216-049-91	s	METAL, CHIP 1k 5% 1/10W	
R375	1-216-029-00	s	METAL, CHIP 150 5% 1/10W	
R376	1-216-029-00	s	METAL, CHIP 150 5% 1/10W	
R377	1-216-295-91	s	RES, CHIP 0	*3)
R378	1-216-295-91	s	RES, CHIP 0	*3)
R379	1-216-662-11	s	METAL, CHIP 3k 0.5% 1/10W	
R380	1-216-651-11	s	METAL, CHIP 1k 0.5% 1/10W	
R381	1-216-049-91	s	METAL, CHIP 1k 5% 1/10W	

PTC-84 BOARD

Ref. No. or Q'ty	Part No.	SP	Description
1pc	1-662-908-11	o	PRINTED CIRCUIT BOARD, PTC-84
CN220	1-566-767-11	s	CONNECTOR 12P, MALE
CN222	1-564-002-11	s	CONNECTOR 3P, MALE
CN223	1-506-468-11	s	CONNECTOR 3P, MALE
CN224	1-506-467-11	s	CONNECTOR 2P, MALE
PH1	8-719-991-24	s	PHOTO TRANSISTOR GP1S23
PH2	8-719-991-24	s	PHOTO TRANSISTOR GP1S23

PTC-85 BOARD

Ref. No. or Q'ty	Part No.	SP	Description
1pc	1-662-909-11	o	PRINTED CIRCUIT BOARD, PTC-85
CN26	1-766-716-11	o	CONNECTOR, BB 3P, MALE
Q1	8-729-926-31	s	PHOTO TRANSISTOR PT483F1S

PTC-86 BOARD

Ref. No. or Q'ty	Part No.	SP	Description
1pc	1-662-910-11	o	PRINTED CIRCUIT BOARD, PTC-86
CN24	1-565-876-11	o	CONNECTOR 4P, MALE
CN25	1-778-662-11	o	CONNECTOR, BB 6P, MALE
Q1	8-729-926-31	s	PHOTO TRANSISTOR PT483F1S

PTC-87 BOARD

Ref. No. or Q'ty	Part No.	SP	Description
1pc	1-662-911-11	o	PRINTED CIRCUIT BOARD, PTC-87
CN23	1-766-723-11	s	CONNECTOR, BB 3P, FEMALE
D1	8-719-057-82	s	LED TLN115A, INFRARED

PTC-88 BOARD

Ref. No. or Q'ty	Part No.	SP	Description
1pc	1-662-912-11	o	PRINTED CIRCUIT BOARD, PTC-88
CN21	1-506-484-11	s	CONNECTOR 5P, MALE
CN22	1-506-481-11	s	CONNECTOR 2P, MALE
PH1	8-719-939-05	s	PHOTO-INTERRUPTER GP-1S54

RM-159 BOARD

Ref. No. or Q'ty	Part No.	SP	Description
1pc	1-662-916-11	o	PRINTED CIRCUIT BOARD, RM-159
CN11	1-778-666-11	o	CONNECTOR, FPC 9P
CN12	1-565-876-11	o	CONNECTOR 4P, MALE
CN13	1-564-013-11	o	CONNECTOR 3P, MALE
CN14	1-564-718-11	o	CONNECTOR 2P, MALE

RM-160 BOARD

Ref. No. or Q'ty	Part No.	SP	Description
1pc	1-662-919-11	o	PRINTED CIRCUIT BOARD, RM-160
CN15	1-778-666-11	o	CONNECTOR, FPC 9P
CN16	1-565-876-11	o	CONNECTOR 4P, MALE
CN17	1-564-013-11	o	CONNECTOR 3P, MALE
CN18	1-564-718-11	o	CONNECTOR 2P, MALE

RP-101 BOARD; Suffix -13, 14

Ref. No. or Q'ty	Part No.	SP	Description	

This list corresponds to the board suffix numbers -13 and 14.

The parts marked * are different, depending on the product serial numbers, as shown below:
*1) Serial number; 10001 through 10780 (For DSR-80 J)
Serial number; 10001 through 11750 (For DSR-80 UC)
Serial number; 10001 through 11470 (For DSR-80P CE)
*2) Serial number; 10781 and higher (For DSR-80 J)
Serial number; 11751 and higher (For DSR-80 UC)
Serial number; 11471 and higher (For DSR-80P CE)
Serial number; 10001 and higher (For DSR-80P CE)

Ref. No. or Q'ty	Part No.	SP	Description	
1pc	A-8315-285-A	s	MOUNTED CIRCUIT BOARD, RP-101	
1pc	7-682-903-11	s	SCREW +PWH 3x6	
1pc	3-179-084-01	s	LEVER (R), PRINTED CIRCUIT BOARD	
1pc	3-179-085-01	s	LEVER (L), PRINTED CIRCUIT BOARD	
C11	1-163-038-91	s	CERAMIC, CHIP 0.1uF 25V	
C12	1-163-038-91	s	CERAMIC, CHIP 0.1uF 25V	
C13	1-163-038-91	s	CERAMIC, CHIP 0.1uF 25V	
C14	1-163-038-91	s	CERAMIC, CHIP 0.1uF 25V	
C15	1-163-038-91	s	CERAMIC, CHIP 0.1uF 25V	
C16	1-104-851-11	s	TANTALUM, CHIP 10uF 20% 10V	
C17	1-126-396-11	s	ELECT, CHIP 47uF 20% 16V	
C102	1-163-038-91	s	CERAMIC, CHIP 0.1uF 25V	
C103	1-163-038-91	s	CERAMIC, CHIP 0.1uF 25V	
C104	1-163-275-11	s	CERAMIC, CHIP 0.001uF 5% 50V	
C105	1-163-038-91	s	CERAMIC, CHIP 0.1uF 25V	
C106	1-163-038-91	s	CERAMIC, CHIP 0.1uF 25V	
C107	1-163-038-91	s	CERAMIC, CHIP 0.1uF 25V	
C108	1-163-038-91	s	CERAMIC, CHIP 0.1uF 25V	
C109	1-163-038-91	s	CERAMIC, CHIP 0.1uF 25V	
C110	1-163-038-91	s	CERAMIC, CHIP 0.1uF 25V	
C111	1-163-038-91	s	CERAMIC, CHIP 0.1uF 25V	
C114	1-163-275-11	s	CERAMIC, CHIP 0.001uF 5% 50V	
C115	1-126-390-11	s	ELECT, CHIP 22uF 20% 6.3V	
C116	1-163-021-91	s	CERAMIC, CHIP 0.01uF 10% 50V	
C117	1-163-038-91	s	CERAMIC, CHIP 0.1uF 25V	
C118	1-135-145-11	s	TANTALUM, CHIP 0.47uF 10% 35V	
C119	1-163-038-91	s	CERAMIC, CHIP 0.1uF 25V	
C120	1-163-038-91	s	CERAMIC, CHIP 0.1uF 25V	
C121	1-126-396-11	s	ELECT, CHIP 47uF 20% 16V	
C122	1-126-396-11	s	ELECT, CHIP 47uF 20% 16V	
C127	1-163-038-91	s	CERAMIC, CHIP 0.1uF 25V	
C128	1-163-038-91	s	CERAMIC, CHIP 0.1uF 25V	
C131	1-163-038-91	s	CERAMIC, CHIP 0.1uF 25V	
C132	1-163-275-11	s	CERAMIC, CHIP 0.001uF 5% 50V	
C134	1-163-275-11	s	CERAMIC, CHIP 0.001uF 5% 50V	
C135	1-163-275-11	s	CERAMIC, CHIP 0.001uF 5% 50V	
C136	1-126-394-11	s	ELECT, CHIP 10uF 20% 16V	
C137	1-163-275-11	s	CERAMIC, CHIP 0.001uF 5% 50V	
C138	1-163-021-91	s	CERAMIC, CHIP 0.01uF 10% 50V	
C139	1-135-145-11	s	TANTALUM, CHIP 0.47uF 10% 35V	
C140	1-163-243-11	s	CERAMIC, CHIP 47pF 5% 50V	
C141	1-126-394-11	s	ELECT, CHIP 10uF 20% 16V	*2)
C142	1-104-851-11	s	TANTALUM, CHIP 10uF 20% 10V	*2)
C143	1-163-038-91	s	CERAMIC, CHIP 0.1uF 25V	*2)
C144	1-163-038-91	s	CERAMIC, CHIP 0.1uF 25V	*2)
C145	1-163-038-91	s	CERAMIC, CHIP 0.1uF 25V	*2)
C146	1-104-851-11	s	TANTALUM, CHIP 10uF 20% 10V	*2)

(RP-101 BOARD; Suffix -13, 14)

Ref. No. or Q'ty	Part No.	SP	Description	
C201	1-110-569-11	s	TANTALUM, CHIP 47uF 20% 6.3V	
C202	1-110-569-11	s	TANTALUM, CHIP 47uF 20% 6.3V	
C203	1-163-038-91	s	CERAMIC, CHIP 0.1uF 25V	
C204	1-163-038-91	s	CERAMIC, CHIP 0.1uF 25V	
C205	1-163-038-91	s	CERAMIC, CHIP 0.1uF 25V	
C206	1-163-038-91	s	CERAMIC, CHIP 0.1uF 25V	
C207	1-163-038-91	s	CERAMIC, CHIP 0.1uF 25V	
C208	1-163-038-91	s	CERAMIC, CHIP 0.1uF 25V	
C209	1-163-038-91	s	CERAMIC, CHIP 0.1uF 25V	
C210	1-163-224-11	s	CERAMIC, CHIP 7pF 0.25pF 50V	
C211	1-163-224-11	s	CERAMIC, CHIP 7pF 0.25pF 50V	
C212	1-163-224-11	s	CERAMIC, CHIP 7pF 0.25pF 50V	
C213	1-126-396-11	s	ELECT, CHIP 47uF 20% 16V	
C214	1-163-038-91	s	CERAMIC, CHIP 0.1uF 25V	
C215	1-163-038-91	s	CERAMIC, CHIP 0.1uF 25V	
C216	1-126-392-11	s	ELECT, CHIP 100uF 20% 6.3V	
C217	1-163-038-91	s	CERAMIC, CHIP 0.1uF 25V	
C218	1-126-392-11	s	ELECT, CHIP 100uF 20% 6.3V	
C219	1-126-392-11	s	ELECT, CHIP 100uF 20% 6.3V	
C220	1-163-038-91	s	CERAMIC, CHIP 0.1uF 25V	
C221	1-163-038-91	s	CERAMIC, CHIP 0.1uF 25V	
C222	1-163-038-91	s	CERAMIC, CHIP 0.1uF 25V	
C223	1-163-038-91	s	CERAMIC, CHIP 0.1uF 25V	
C224	1-163-038-91	s	CERAMIC, CHIP 0.1uF 25V	
C225	1-163-038-91	s	CERAMIC, CHIP 0.1uF 25V	*2)
C226	1-163-038-91	s	CERAMIC, CHIP 0.1uF 25V	*2)
C227	1-163-038-91	s	CERAMIC, CHIP 0.1uF 25V	*2)
C228	1-163-038-91	s	CERAMIC, CHIP 0.1uF 25V	*2)
C229	1-163-038-91	s	CERAMIC, CHIP 0.1uF 25V	*2)
C230	1-163-038-91	s	CERAMIC, CHIP 0.1uF 25V	*2)
C231	1-104-851-11	s	TANTALUM, CHIP 10uF 20% 10V	*2)
C232	1-126-396-11	s	ELECT, CHIP 47uF 20% 16V	*2)
C233	1-126-396-11	s	ELECT, CHIP 47uF 20% 16V	*2)
C303	1-163-038-91	s	CERAMIC, CHIP 0.1uF 25V	
C304	1-163-038-91	s	CERAMIC, CHIP 0.1uF 25V	
C306	1-104-851-11	s	TANTALUM, CHIP 10uF 20% 10V	
C307	1-163-038-91	s	CERAMIC, CHIP 0.1uF 25V	
C308	1-104-851-11	s	TANTALUM, CHIP 10uF 20% 10V	
C309	1-163-038-91	s	CERAMIC, CHIP 0.1uF 25V	
C310	1-163-251-11	s	CERAMIC, CHIP 100pF 5% 50V	
C311	1-163-989-11	s	CERAMIC, CHIP 0.033uF 10% 25V	
C312	1-163-989-11	s	CERAMIC, CHIP 0.033uF 10% 25V	
C313	1-163-021-91	s	CERAMIC, CHIP 0.01uF 10% 50V	
C314	1-163-038-91	s	CERAMIC, CHIP 0.1uF 25V	
C315	1-163-021-91	s	CERAMIC, CHIP 0.01uF 10% 50V	
C316	1-163-275-11	s	CERAMIC, CHIP 0.001uF 5% 50V	
C317	1-163-243-11	s	CERAMIC, CHIP 47pF 5% 50V	
C319	1-163-091-00	s	CERAMIC, CHIP 8pF 50V	
C322	1-163-021-91	s	CERAMIC, CHIP 0.01uF 10% 50V	
C323	1-163-021-91	s	CERAMIC, CHIP 0.01uF 10% 50V	
C324	1-163-021-91	s	CERAMIC, CHIP 0.01uF 10% 50V	
C325	1-163-021-91	s	CERAMIC, CHIP 0.01uF 10% 50V	
C326	1-163-021-91	s	CERAMIC, CHIP 0.01uF 10% 50V	
C327	1-163-021-91	s	CERAMIC, CHIP 0.01uF 10% 50V	
C328	1-163-021-91	s	CERAMIC, CHIP 0.01uF 10% 50V	
C329	1-163-021-91	s	CERAMIC, CHIP 0.01uF 10% 50V	
C330	1-104-851-11	s	TANTALUM, CHIP 10uF 20% 10V	
C331	1-163-021-91	s	CERAMIC, CHIP 0.01uF 10% 50V	
C332	1-163-133-00	s	CERAMIC, CHIP 470pF 5% 50V	

(RP-101 BOARD; Suffix -13, 14)

Ref. No. or Q'ty	Part No.	SP	Description	
C333	1-163-038-91	s	CERAMIC, CHIP 0.1uF 25V	
C334	1-163-021-91	s	CERAMIC, CHIP 0.01uF 10% 50V	
C335	1-163-021-91	s	CERAMIC, CHIP 0.01uF 10% 50V	
C336	1-163-021-91	s	CERAMIC, CHIP 0.01uF 10% 50V	
C337	1-163-021-91	s	CERAMIC, CHIP 0.01uF 10% 50V	
C338	1-163-121-00	s	CERAMIC, CHIP 150pF 5% 50V	
C339	1-163-021-91	s	CERAMIC, CHIP 0.01uF 10% 50V	
C340	1-163-021-91	s	CERAMIC, CHIP 0.01uF 10% 50V	
C341	1-163-121-00	s	CERAMIC, CHIP 150pF 5% 50V	
C342	1-163-038-91	s	CERAMIC, CHIP 0.1uF 25V	
C343	1-104-851-11	s	TANTALUM, CHIP 10uF 20% 10V	
C344	1-163-038-91	s	CERAMIC, CHIP 0.1uF 25V	
C345	1-164-232-11	s	CERAMIC, CHIP 0.01uF 10% 100V	*1)
C346	1-163-016-00	s	CERAMIC, CHIP 0.0039MF 10% 50V	
C347	1-163-020-00	s	CERAMIC, CHIP 0.0082uF 10% 50V	
C348	1-163-243-11	s	CERAMIC, CHIP 47pF 5% 50V	
C349	1-164-182-11	s	CERAMIC, CHIP 0.0033uF 10% 100V	
C350	1-163-021-91	s	CERAMIC, CHIP 0.01uF 10% 50V	
C351	1-163-243-11	s	CERAMIC, CHIP 47pF 5% 50V	
C352	1-163-016-00	s	CERAMIC, CHIP 0.0039MF 10% 50V	
C353	1-163-020-00	s	CERAMIC, CHIP 0.0082uF 10% 50V	
C354	1-163-021-91	s	CERAMIC, CHIP 0.01uF 10% 50V	
C355	1-164-182-11	s	CERAMIC, CHIP 0.0033uF 10% 100V	
C356	1-163-021-91	s	CERAMIC, CHIP 0.01uF 10% 50V	
C357	1-163-021-91	s	CERAMIC, CHIP 0.01uF 10% 50V	
C358	1-163-038-91	s	CERAMIC, CHIP 0.1uF 25V	
C359	1-104-851-11	s	TANTALUM, CHIP 10uF 20% 10V	
C360	1-163-021-91	s	CERAMIC, CHIP 0.01uF 10% 50V	
C361	1-104-851-11	s	TANTALUM, CHIP 10uF 20% 10V	
C362	1-163-038-91	s	CERAMIC, CHIP 0.1uF 25V	
C363	1-163-038-91	s	CERAMIC, CHIP 0.1uF 25V	
C364	1-163-038-91	s	CERAMIC, CHIP 0.1uF 25V	
C365	1-104-851-11	s	TANTALUM, CHIP 10uF 20% 10V	
C366	1-163-038-91	s	CERAMIC, CHIP 0.1uF 25V	*2)
C367	1-104-851-11	s	TANTALUM, CHIP 10uF 20% 10V	*2)
C368	1-163-038-91	s	CERAMIC, CHIP 0.1uF 25V	*2)
C401	1-163-021-91	s	CERAMIC, CHIP 0.01uF 10% 50V	
C402	1-163-021-91	s	CERAMIC, CHIP 0.01uF 10% 50V	
C403	1-104-851-11	s	TANTALUM, CHIP 10uF 20% 10V	
C406	1-163-038-91	s	CERAMIC, CHIP 0.1uF 25V	
C407	1-104-851-11	s	TANTALUM, CHIP 10uF 20% 10V	
C408	1-163-251-11	s	CERAMIC, CHIP 100pF 5% 50V	
C409	1-163-038-91	s	CERAMIC, CHIP 0.1uF 25V	
C410	1-163-989-11	s	CERAMIC, CHIP 0.033uF 10% 25V	
C411	1-163-989-11	s	CERAMIC, CHIP 0.033uF 10% 25V	
C412	1-163-021-91	s	CERAMIC, CHIP 0.01uF 10% 50V	
C413	1-163-038-91	s	CERAMIC, CHIP 0.1uF 25V	
C414	1-163-021-91	s	CERAMIC, CHIP 0.01uF 10% 50V	
C415	1-163-275-11	s	CERAMIC, CHIP 0.001uF 5% 50V	
C416	1-163-243-11	s	CERAMIC, CHIP 47pF 5% 50V	
C418	1-163-091-00	s	CERAMIC, CHIP 8pF 50V	
C420	1-163-021-91	s	CERAMIC, CHIP 0.01uF 10% 50V	
C421	1-163-021-91	s	CERAMIC, CHIP 0.01uF 10% 50V	
C423	1-163-021-91	s	CERAMIC, CHIP 0.01uF 10% 50V	
C424	1-163-021-91	s	CERAMIC, CHIP 0.01uF 10% 50V	
C425	1-163-021-91	s	CERAMIC, CHIP 0.01uF 10% 50V	
C426	1-163-021-91	s	CERAMIC, CHIP 0.01uF 10% 50V	
C427	1-163-021-91	s	CERAMIC, CHIP 0.01uF 10% 50V	
C428	1-163-021-91	s	CERAMIC, CHIP 0.01uF 10% 50V	

(RP-101 BOARD; Suffix -13, 14)

Ref. No. or Q'ty	Part No.	SP	Description	
C429	1-104-851-11	s	TANTALUM, CHIP 10uF 20% 10V	
C430	1-163-021-91	s	CERAMIC, CHIP 0.01uF 10% 50V	
C431	1-163-133-00	s	CERAMIC, CHIP 470pF 5% 50V	
C432	1-163-038-91	s	CERAMIC, CHIP 0.1uF 25V	
C433	1-163-021-91	s	CERAMIC, CHIP 0.01uF 10% 50V	
C434	1-163-021-91	s	CERAMIC, CHIP 0.01uF 10% 50V	
C435	1-163-021-91	s	CERAMIC, CHIP 0.01uF 10% 50V	
C436	1-163-021-91	s	CERAMIC, CHIP 0.01uF 10% 50V	
C441	1-163-121-00	s	CERAMIC, CHIP 150pF 5% 50V	
C442	1-163-021-91	s	CERAMIC, CHIP 0.01uF 10% 50V	
C443	1-163-021-91	s	CERAMIC, CHIP 0.01uF 10% 50V	
C444	1-163-121-00	s	CERAMIC, CHIP 150pF 5% 50V	
C445	1-163-038-91	s	CERAMIC, CHIP 0.1uF 25V	
C446	1-104-851-11	s	TANTALUM, CHIP 10uF 20% 10V	
C447	1-163-038-91	s	CERAMIC, CHIP 0.1uF 25V	
C448	1-163-021-91	s	CERAMIC, CHIP 0.01uF 10% 50V	
C449	1-163-016-00	s	CERAMIC, CHIP 0.0039MF 10% 50V	
C450	1-163-020-00	s	CERAMIC, CHIP 0.0082uF 10% 50V	
C451	1-163-243-11	s	CERAMIC, CHIP 47pF 5% 50V	
C452	1-164-182-11	s	CERAMIC, CHIP 0.0033uF 10% 100V	
C453	1-163-021-91	s	CERAMIC, CHIP 0.01uF 10% 50V	
C454	1-163-243-11	s	CERAMIC, CHIP 47pF 5% 50V	
C455	1-163-016-00	s	CERAMIC, CHIP 0.0039MF 10% 50V	
C456	1-163-020-00	s	CERAMIC, CHIP 0.0082uF 10% 50V	
C457	1-163-021-91	s	CERAMIC, CHIP 0.01uF 10% 50V	
C458	1-164-182-11	s	CERAMIC, CHIP 0.0033uF 10% 100V	
C459	1-163-021-91	s	CERAMIC, CHIP 0.01uF 10% 50V	
C460	1-163-021-91	s	CERAMIC, CHIP 0.01uF 10% 50V	
C461	1-163-038-91	s	CERAMIC, CHIP 0.1uF 25V	
C462	1-104-851-11	s	TANTALUM, CHIP 10uF 20% 10V	
C463	1-163-021-91	s	CERAMIC, CHIP 0.01uF 10% 50V	
C464	1-104-851-11	s	TANTALUM, CHIP 10uF 20% 10V	
C465	1-163-038-91	s	CERAMIC, CHIP 0.1uF 25V	
C466	1-163-038-91	s	CERAMIC, CHIP 0.1uF 25V	
C467	1-163-038-91	s	CERAMIC, CHIP 0.1uF 25V	
C468	1-104-851-11	s	TANTALUM, CHIP 10uF 20% 10V	
C469	1-163-017-00	s	CERAMIC, CHIP 0.0047uF 5% 50V	
C470	1-163-038-91	s	CERAMIC, CHIP 0.1uF 25V	
C471	1-126-396-11	s	ELECT, CHIP 47uF 20% 16V	*2)
C472	1-104-851-11	s	TANTALUM, CHIP 10uF 20% 10V	*2)
C473	1-163-038-91	s	CERAMIC, CHIP 0.1uF 25V	*2)
C502	1-163-038-91	s	CERAMIC, CHIP 0.1uF 25V	
C503	1-104-851-11	s	TANTALUM, CHIP 10uF 20% 10V	
C506	1-163-038-91	s	CERAMIC, CHIP 0.1uF 25V	
C507	1-104-851-11	s	TANTALUM, CHIP 10uF 20% 10V	
C508	1-163-251-11	s	CERAMIC, CHIP 100pF 5% 50V	
C509	1-163-038-91	s	CERAMIC, CHIP 0.1uF 25V	
C510	1-163-989-11	s	CERAMIC, CHIP 0.033uF 10% 25V	
C511	1-163-989-11	s	CERAMIC, CHIP 0.033uF 10% 25V	
C512	1-163-021-91	s	CERAMIC, CHIP 0.01uF 10% 50V	
C513	1-163-038-91	s	CERAMIC, CHIP 0.1uF 25V	
C514	1-163-021-91	s	CERAMIC, CHIP 0.01uF 10% 50V	
C515	1-163-275-11	s	CERAMIC, CHIP 0.001uF 5% 50V	
C516	1-163-243-11	s	CERAMIC, CHIP 47pF 5% 50V	
C518	1-163-091-00	s	CERAMIC, CHIP 8pF 50V	
C521	1-163-021-91	s	CERAMIC, CHIP 0.01uF 10% 50V	
C522	1-163-021-91	s	CERAMIC, CHIP 0.01uF 10% 50V	
C523	1-163-021-91	s	CERAMIC, CHIP 0.01uF 10% 50V	
C524	1-163-021-91	s	CERAMIC, CHIP 0.01uF 10% 50V	

(RP-101 BOARD; Suffix -13, 14)

Ref. No. or Q'ty	Part No.	SP	Description	
C525	1-163-021-91	s	CERAMIC, CHIP 0.01uF 10% 50V	
C526	1-163-021-91	s	CERAMIC, CHIP 0.01uF 10% 50V	
C527	1-163-021-91	s	CERAMIC, CHIP 0.01uF 10% 50V	
C528	1-163-021-91	s	CERAMIC, CHIP 0.01uF 10% 50V	
C529	1-104-851-11	s	TANTALUM, CHIP 10uF 20% 10V	
C530	1-163-021-91	s	CERAMIC, CHIP 0.01uF 10% 50V	
C531	1-163-133-00	s	CERAMIC, CHIP 470pF 5% 50V	
C532	1-163-038-91	s	CERAMIC, CHIP 0.1uF 25V	
C533	1-163-021-91	s	CERAMIC, CHIP 0.01uF 10% 50V	
C534	1-163-021-91	s	CERAMIC, CHIP 0.01uF 10% 50V	
C535	1-163-021-91	s	CERAMIC, CHIP 0.01uF 10% 50V	
C536	1-163-021-91	s	CERAMIC, CHIP 0.01uF 10% 50V	
C537	1-163-121-00	s	CERAMIC, CHIP 150pF 5% 50V	
C538	1-163-021-91	s	CERAMIC, CHIP 0.01uF 10% 50V	
C539	1-163-021-91	s	CERAMIC, CHIP 0.01uF 10% 50V	
C540	1-163-121-00	s	CERAMIC, CHIP 150pF 5% 50V	
C541	1-163-038-91	s	CERAMIC, CHIP 0.1uF 25V	
C542	1-104-851-11	s	TANTALUM, CHIP 10uF 20% 10V	
C543	1-163-038-91	s	CERAMIC, CHIP 0.1uF 25V	
C544	1-163-021-91	s	CERAMIC, CHIP 0.01uF 10% 50V	
C545	1-163-016-00	s	CERAMIC, CHIP 0.0039MF 10% 50V	
C546	1-163-020-00	s	CERAMIC, CHIP 0.0082uF 10% 50V	
C547	1-163-243-11	s	CERAMIC, CHIP 47pF 5% 50V	
C548	1-164-182-11	s	CERAMIC, CHIP 0.0033uF 10% 100V	
C549	1-163-021-91	s	CERAMIC, CHIP 0.01uF 10% 50V	
C550	1-163-243-11	s	CERAMIC, CHIP 47pF 5% 50V	
C551	1-163-016-00	s	CERAMIC, CHIP 0.0039MF 10% 50V	
C552	1-163-020-00	s	CERAMIC, CHIP 0.0082uF 10% 50V	
C553	1-163-021-91	s	CERAMIC, CHIP 0.01uF 10% 50V	
C554	1-164-182-11	s	CERAMIC, CHIP 0.0033uF 10% 100V	
C555	1-163-021-91	s	CERAMIC, CHIP 0.01uF 10% 50V	
C556	1-163-021-91	s	CERAMIC, CHIP 0.01uF 10% 50V	
C557	1-163-038-91	s	CERAMIC, CHIP 0.1uF 25V	
C558	1-104-851-11	s	TANTALUM, CHIP 10uF 20% 10V	
C559	1-163-021-91	s	CERAMIC, CHIP 0.01uF 10% 50V	
C560	1-104-851-11	s	TANTALUM, CHIP 10uF 20% 10V	
C561	1-163-038-91	s	CERAMIC, CHIP 0.1uF 25V	
C562	1-163-021-91	s	CERAMIC, CHIP 0.01uF 10% 50V	
C563	1-163-038-91	s	CERAMIC, CHIP 0.1uF 25V	
C564	1-104-851-11	s	TANTALUM, CHIP 10uF 20% 10V	
C565	1-163-017-00	s	CERAMIC, CHIP 0.0047uF 5% 50V	
C566	1-126-396-11	s	ELECT, CHIP 47uF 20% 16V	*2)
C567	1-104-851-11	s	TANTALUM, CHIP 10uF 20% 10V	*2)
C568	1-163-038-91	s	CERAMIC, CHIP 0.1uF 25V	*2)
C601	1-135-145-11	s	TANTALUM, CHIP 0.47uF 10% 35V	
C602	1-104-851-11	s	TANTALUM, CHIP 10uF 20% 10V	
C603	1-163-275-11	s	CERAMIC, CHIP 0.001uF 5% 50V	
C604	1-163-021-91	s	CERAMIC, CHIP 0.01uF 10% 50V	
C605	1-163-021-91	s	CERAMIC, CHIP 0.01uF 10% 50V	
C606	1-163-038-91	s	CERAMIC, CHIP 0.1uF 25V	
C607	1-163-275-11	s	CERAMIC, CHIP 0.001uF 5% 50V	
C608	1-163-275-11	s	CERAMIC, CHIP 0.001uF 5% 50V	
C609	1-163-038-91	s	CERAMIC, CHIP 0.1uF 25V	
C610	1-104-851-11	s	TANTALUM, CHIP 10uF 20% 10V	
C611	1-163-021-91	s	CERAMIC, CHIP 0.01uF 10% 50V	
C612	1-163-038-91	s	CERAMIC, CHIP 0.1uF 25V	
C613	1-163-251-11	s	CERAMIC, CHIP 100pF 5% 50V	
C614	1-163-038-91	s	CERAMIC, CHIP 0.1uF 25V	
C615	1-163-038-91	s	CERAMIC, CHIP 0.1uF 25V	

(RP-101 BOARD; Suffix -13, 14)

Ref. No. or Q'ty	Part No.	SP	Description	
C616	1-163-038-91	s	CERAMIC, CHIP 0.1uF 25V	
C617	1-163-038-91	s	CERAMIC, CHIP 0.1uF 25V	
C618	1-163-038-91	s	CERAMIC, CHIP 0.1uF 25V	
C619	1-163-038-91	s	CERAMIC, CHIP 0.1uF 25V	
C620	1-163-038-91	s	CERAMIC, CHIP 0.1uF 25V	
C621	1-104-851-11	s	TANTALUM, CHIP 10uF 20% 10V	*2)
C622	1-104-851-11	s	TANTALUM, CHIP 10uF 20% 10V	*2)
C701	1-163-038-91	s	CERAMIC, CHIP 0.1uF 25V	
C707	1-163-038-91	s	CERAMIC, CHIP 0.1uF 25V	
C708	1-163-038-91	s	CERAMIC, CHIP 0.1uF 25V	
C709	1-163-038-91	s	CERAMIC, CHIP 0.1uF 25V	
C710	1-163-038-91	s	CERAMIC, CHIP 0.1uF 25V	
C711	1-163-038-91	s	CERAMIC, CHIP 0.1uF 25V	
C712	1-163-038-91	s	CERAMIC, CHIP 0.1uF 25V	
C713	1-163-021-91	s	CERAMIC, CHIP 0.01uF 10% 50V	
C714	1-163-021-91	s	CERAMIC, CHIP 0.01uF 10% 50V	
C717	1-104-851-11	s	TANTALUM, CHIP 10uF 20% 10V	
C719	1-163-038-91	s	CERAMIC, CHIP 0.1uF 25V	
C721	1-163-121-00	s	CERAMIC, CHIP 150pF 5% 50V	
C723	1-163-121-00	s	CERAMIC, CHIP 150pF 5% 50V	
C725	1-163-021-91	s	CERAMIC, CHIP 0.01uF 10% 50V	
C727	1-163-021-91	s	CERAMIC, CHIP 0.01uF 10% 50V	
C728	1-163-021-91	s	CERAMIC, CHIP 0.01uF 10% 50V	
C731	1-164-161-11	s	CERAMIC, CHIP 0.0022uF 10% 100V	
C732	1-163-037-11	s	CERAMIC, CHIP 0.022uF 10% 25V	
C733	1-104-851-11	s	TANTALUM, CHIP 10uF 20% 10V	
C737	1-163-021-91	s	CERAMIC, CHIP 0.01uF 10% 50V	
C739	1-163-038-91	s	CERAMIC, CHIP 0.1uF 25V	
C741	1-163-038-91	s	CERAMIC, CHIP 0.1uF 25V	
C742	1-163-038-91	s	CERAMIC, CHIP 0.1uF 25V	
C743	1-163-038-91	s	CERAMIC, CHIP 0.1uF 25V	
C744	1-104-851-11	s	TANTALUM, CHIP 10uF 20% 10V	*2)
C745	1-104-851-11	s	TANTALUM, CHIP 10uF 20% 10V	*2)
CN1	1-566-621-11	o	CONNECTOR, PS 34P, FEMALE	
CN116	1-778-262-12	o	CONNECTOR, BB 148P, MALE	
D101	8-719-027-95	s	DIODE HSM88WK	
D102	8-719-041-39	s	DIODE KV1470	
D103	8-719-027-95	s	DIODE HSM88WK	
D104	8-719-041-39	s	DIODE KV1470	
D601	8-719-041-39	s	DIODE KV1470	
D602	8-719-027-95	s	DIODE HSM88WK	
FL301	1-411-274-21	s	DELAY LINE 23ns	
FL302	1-233-343-21	s	FILTER, LOW-PASS, CHIP 22MHz	
FL303	1-233-344-21	s	FILTER, LOW-PASS, CHIP 22MHz	
FL401	1-411-274-21	s	DELAY LINE 23ns	
FL402	1-233-343-21	s	FILTER, LOW-PASS, CHIP 22MHz	
FL403	1-233-344-21	s	FILTER, LOW-PASS, CHIP 22MHz	
FL501	1-411-274-21	s	DELAY LINE 23ns	
FL502	1-233-343-21	s	FILTER, LOW-PASS, CHIP 22MHz	
FL503	1-233-344-21	s	FILTER, LOW-PASS, CHIP 22MHz	
FL701	1-233-351-21	s	FILTER, BAND-PASS, CHIP 465kHz	
FL702	1-233-350-21	s	FILTER, BAND-PASS, CHIP 697kHz	
IC11	8-759-259-77	s	IC PQ20VZ5U	
IC101	8-752-360-44	s	IC CXK1203AR	
IC102	8-759-490-41	s	IC TC74VHCT541AFT(EL)	
IC103	8-759-167-20	s	IC UPD42280GU-30	
IC104	8-759-167-20	s	IC UPD42280GU-30	

(RP-101 BOARD; Suffix -13, 14)

Ref. No. or Q'ty	Part No.	SP	Description	
IC105	8-752-379-36	s	IC CXD2189AR	
IC106	8-759-524-50	s	IC TC74VHC541FT(EL)	
IC107	8-759-524-50	s	IC TC74VHC541FT(EL)	
IC110	8-752-379-36	s	IC CXD2189AR	
IC115	8-759-523-81	s	IC TC74VHC08FT(EL)	
IC116	8-759-523-81	s	IC TC74VHC08FT(EL)	
IC117	8-759-524-50	s	IC TC74VHC541FT(EL)	
IC118	8-759-196-97	s	IC TC7SH32FU-TE85R	*2)
IC201	8-759-523-81	s	IC TC74VHC08FT(EL)	
IC202	8-759-524-10	s	IC TC74VHC157FT(EL)	
IC203	8-759-491-55	s	IC TC74VHCT74AFT(EL)	
IC204	8-759-012-02	s	IC MC10H124M	
IC205	8-759-012-00	s	IC MC10H116M	
IC206	8-759-066-59	s	IC TC74HC4053AFS	
IC207	8-759-530-05	s	IC TC4053BFT(EL,N)	
IC208	8-759-453-98	s	IC CXD8668Q	
IC209	8-759-268-95	s	IC SN74HCT00ANS-E05	
IC301	8-752-070-11	s	IC CXA1761R	
IC302	8-752-070-12	s	IC CXA1762Q	
IC303	8-752-371-18	s	IC CXD2302Q	
IC304	8-759-927-46	s	IC SN74HC00ANS	
IC401	8-752-070-11	s	IC CXA1761R	
IC403	8-752-070-12	s	IC CXA1762Q	
IC404	8-752-371-18	s	IC CXD2302Q	
IC450	8-759-196-97	s	IC TC7SH32FU-TE85R	
IC501	8-752-070-11	s	IC CXA1761R	
IC502	8-752-070-12	s	IC CXA1762Q	
IC503	8-752-371-18	s	IC CXD2302Q	
IC550	8-759-196-97	s	IC TC7SH32FU-TE85R	
IC601	8-752-379-36	s	IC CXD2189AR	
IC602	8-752-379-36	s	IC CXD2189AR	
IC603	8-759-524-50	s	IC TC74VHC541FT(EL)	
IC604	8-759-524-50	s	IC TC74VHC541FT(EL)	
IC605	8-759-524-50	s	IC TC74VHC541FT(EL)	
IC606	8-759-524-50	s	IC TC74VHC541FT(EL)	
IC607	8-759-459-41	s	IC TMS4C2973-26DTR	
IC608	8-759-459-41	s	IC TMS4C2973-26DTR	
IC701	8-759-469-25	s	IC AK6440AF-E2	
IC702	8-759-064-36	s	IC MB88346BPFV	
IC703	8-759-064-36	s	IC MB88346BPFV	
IC704	8-759-064-36	s	IC MB88346BPFV	
IC705	8-759-100-96	s	IC UPC4558G2	
IC706	8-759-009-07	s	IC MC14053BF	
IC707	8-759-062-66	s	IC TC7S66F	
IC709	8-759-327-00	s	IC CXA8044Q-T4	
L101	1-414-398-11	s	INDUCTOR, CHIP 10uH	
L102	1-414-398-11	s	INDUCTOR, CHIP 10uH	
L103	1-414-398-11	s	INDUCTOR, CHIP 10uH	
L104	1-410-369-11	s	INDUCTOR, CHIP 1uH	
L105	1-414-398-11	s	INDUCTOR, CHIP 10uH	
L106	1-410-738-41	s	INDUCTOR, CHIP 0.56uH	
L107	1-414-398-11	s	INDUCTOR, CHIP 10uH	
L108	1-414-398-11	s	INDUCTOR, CHIP 10uH	
L109	1-410-738-41	s	INDUCTOR, CHIP 0.56uH	
L201	1-414-400-11	s	INDUCTOR, CHIP 22uH	
L202	1-414-398-11	s	INDUCTOR, CHIP 10uH	
L203	1-414-398-11	s	INDUCTOR, CHIP 10uH	
L204	1-414-398-11	s	INDUCTOR, CHIP 10uH	
L205	1-410-369-11	s	INDUCTOR, CHIP 1uH	

(RP-101 BOARD; Suffix -13, 14)

Ref. No. or Q'ty	Part No.	SP	Description	
L206	1-410-369-11	s	INDUCTOR, CHIP 1uH	
L207	1-410-369-11	s	INDUCTOR, CHIP 1uH	
L208	1-414-398-11	s	INDUCTOR, CHIP 10uH	
L301	1-414-398-11	s	INDUCTOR, CHIP 10uH	
L302	1-414-398-11	s	INDUCTOR, CHIP 10uH	
L303	1-412-963-11	s	INDUCTOR, CHIP 100uH	
L305	1-414-398-11	s	INDUCTOR, CHIP 10uH	
L306	1-414-398-11	s	INDUCTOR, CHIP 10uH	
L307	1-414-398-11	s	INDUCTOR, CHIP 10uH	
L308	1-414-398-11	s	INDUCTOR, CHIP 10uH	
L309	1-414-398-11	s	INDUCTOR, CHIP 10uH	
L401	1-414-398-11	s	INDUCTOR, CHIP 10uH	
L402	1-414-398-11	s	INDUCTOR, CHIP 10uH	
L403	1-412-963-11	s	INDUCTOR, CHIP 100uH	
L405	1-414-398-11	s	INDUCTOR, CHIP 10uH	
L406	1-414-398-11	s	INDUCTOR, CHIP 10uH	
L407	1-414-398-11	s	INDUCTOR, CHIP 10uH	
L408	1-414-398-11	s	INDUCTOR, CHIP 10uH	
L409	1-414-398-11	s	INDUCTOR, CHIP 10uH	
L410	1-414-398-11	s	INDUCTOR, CHIP 10uH	
L411	1-414-398-11	s	INDUCTOR, CHIP 10uH	
L501	1-414-398-11	s	INDUCTOR, CHIP 10uH	
L502	1-414-398-11	s	INDUCTOR, CHIP 10uH	
L503	1-412-963-11	s	INDUCTOR, CHIP 100uH	
L505	1-414-398-11	s	INDUCTOR, CHIP 10uH	
L506	1-414-398-11	s	INDUCTOR, CHIP 10uH	
L507	1-414-398-11	s	INDUCTOR, CHIP 10uH	
L508	1-414-398-11	s	INDUCTOR, CHIP 10uH	
L509	1-414-398-11	s	INDUCTOR, CHIP 10uH	
L510	1-414-398-11	s	INDUCTOR, CHIP 10uH	
L601	1-414-398-11	s	INDUCTOR, CHIP 10uH	
L602	1-410-738-41	s	INDUCTOR, CHIP 0.56uH	
L603	1-414-398-11	s	INDUCTOR, CHIP 10uH	
L604	1-414-398-11	s	INDUCTOR, CHIP 10uH	
L605	1-414-398-11	s	INDUCTOR, CHIP 10uH	
L701	1-414-398-11	s	INDUCTOR, CHIP 10uH	
L702	1-414-398-11	s	INDUCTOR, CHIP 10uH	
L704	1-412-282-41	s	INDUCTOR, CHIP 470uH	
L706	1-414-398-11	s	INDUCTOR, CHIP 10uH	*2)
L707	1-414-398-11	s	INDUCTOR, CHIP 10uH	*2)
PS11	⚠ 1-533-282-21	s	LINK, IC, CHIP 2A	
PS13	⚠ 1-576-124-11	s	LINK, IC, CHIP 1A	
PS14	⚠ 1-576-124-11	s	LINK, IC, CHIP 1A	
PS15	⚠ 1-576-124-11	s	LINK, IC, CHIP 1A	
Q202	8-729-216-22	s	TRANSISTOR 2SA1162	
Q206	8-729-907-46	s	TRANSISTOR IMZ1	
Q207	8-729-907-46	s	TRANSISTOR IMZ1	
Q208	8-729-140-47	s	TRANSISTOR 2SC3735-T2B-B35	
Q301	8-729-905-35	s	TRANSISTOR 2SC4081R	
Q302	8-729-905-35	s	TRANSISTOR 2SC4081R	
Q303	8-729-905-23	s	TRANSISTOR 2SA1576R	
Q304	8-729-905-35	s	TRANSISTOR 2SC4081R	
Q305	8-729-905-35	s	TRANSISTOR 2SC4081R	
Q306	8-729-905-35	s	TRANSISTOR 2SC4081R	
Q307	8-729-905-35	s	TRANSISTOR 2SC4081R	
Q308	8-729-905-35	s	TRANSISTOR 2SC4081-R	*1)
Q401	8-729-905-35	s	TRANSISTOR 2SC4081R	
Q402	8-729-905-35	s	TRANSISTOR 2SC4081R	
Q403	8-729-905-23	s	TRANSISTOR 2SA1576R	

(RP-101 BOARD; Suffix -13, 14)

Ref. No. or Q'ty	Part No.	SP	Description	
Q404	8-729-905-35	s	TRANSISTOR 2SC4081R	
Q405	8-729-905-35	s	TRANSISTOR 2SC4081R	
Q406	8-729-905-35	s	TRANSISTOR 2SC4081R	
Q407	8-729-905-35	s	TRANSISTOR 2SC4081R	
Q501	8-729-905-35	s	TRANSISTOR 2SC4081R	
Q502	8-729-905-35	s	TRANSISTOR 2SC4081R	
Q503	8-729-905-23	s	TRANSISTOR 2SA1576R	
Q504	8-729-905-35	s	TRANSISTOR 2SC4081R	
Q505	8-729-905-35	s	TRANSISTOR 2SC4081R	
Q506	8-729-905-35	s	TRANSISTOR 2SC4081R	
Q507	8-729-905-35	s	TRANSISTOR 2SC4081R	
Q701	8-729-024-91	s	TRANSISTOR 2SC2712-GL-TE85L	
Q702	8-729-900-53	s	TRANSISTOR DTC114EK	
Q703	8-729-900-53	s	TRANSISTOR DTC114EK	
Q704	8-729-905-35	s	TRANSISTOR 2SC4081R	
R11	1-216-655-11	s	METAL, CHIP 1.5k 0.5% 1/10W	
R12	1-216-651-11	s	METAL, CHIP 1k 0.5% 1/10W	
R101	1-216-025-91	s	METAL, CHIP 100 5% 1/10W	
R102	1-216-025-91	s	METAL, CHIP 100 5% 1/10W	
R103	1-216-025-91	s	METAL, CHIP 100 5% 1/10W	
R104	1-216-295-91	s	RES, CHIP 0	
R105	1-216-295-91	s	RES, CHIP 0	
R106	1-216-295-91	s	RES, CHIP 0	
R109	1-216-089-91	s	METAL, CHIP 47k 5% 1/10W	
R110	1-216-089-91	s	METAL, CHIP 47k 5% 1/10W	
R111	1-216-057-00	s	METAL, CHIP 2.2k 5% 1/10W	
R113	1-216-025-91	s	METAL, CHIP 100 5% 1/10W	
R114	1-216-035-00	s	METAL, CHIP 270 5% 1/10W	
R115	1-216-295-91	s	RES, CHIP 0	
R146	1-216-295-91	s	RES, CHIP 0	*2)
R147	1-216-295-91	s	RES, CHIP 0	
R148	1-216-295-91	s	RES, CHIP 0	
R149	1-216-295-91	s	RES, CHIP 0	
R150	1-216-295-91	s	RES, CHIP 0	
R151	1-216-295-91	s	RES, CHIP 0	
R152	1-216-295-91	s	RES, CHIP 0	*2)
R153	1-216-295-91	s	RES, CHIP 0	
R160	1-216-089-91	s	METAL, CHIP 47k 5% 1/10W	
R161	1-216-089-91	s	METAL, CHIP 47k 5% 1/10W	
R162	1-216-057-00	s	METAL, CHIP 2.2k 5% 1/10W	
R163	1-216-025-91	s	METAL, CHIP 100 5% 1/10W	
R164	1-216-035-00	s	METAL, CHIP 270 5% 1/10W	
R165	1-216-035-00	s	METAL, CHIP 270 5% 1/10W	
R166	1-216-035-00	s	METAL, CHIP 270 5% 1/10W	
R202	1-216-025-91	s	METAL, CHIP 100 5% 1/10W	
R203	1-216-025-91	s	METAL, CHIP 100 5% 1/10W	
R222	1-216-295-91	s	RES, CHIP 0	
R223	1-216-039-00	s	METAL, CHIP 390 5% 1/10W	
R224	1-216-039-00	s	METAL, CHIP 390 5% 1/10W	
R225	1-216-049-91	s	METAL, CHIP 1k 5% 1/10W	
R226	1-216-049-91	s	METAL, CHIP 1k 5% 1/10W	
R227	1-216-041-00	s	METAL, CHIP 470 5% 1/10W	
R228	1-216-041-00	s	METAL, CHIP 470 5% 1/10W	
R229	1-216-039-00	s	METAL, CHIP 390 5% 1/10W	
R230	1-216-049-91	s	METAL, CHIP 1k 5% 1/10W	
R231	1-216-049-91	s	METAL, CHIP 1k 5% 1/10W	
R232	1-216-039-00	s	METAL, CHIP 390 5% 1/10W	
R233	1-216-039-00	s	METAL, CHIP 390 5% 1/10W	
R234	1-216-039-00	s	METAL, CHIP 390 5% 1/10W	

(RP-101 BOARD; Suffix -13, 14)

Ref. No. or Q'ty	Part No.	SP	Description	
R235	1-216-049-91	s	METAL, CHIP 1k 5% 1/10W	
R236	1-216-049-91	s	METAL, CHIP 1k 5% 1/10W	
R237	1-216-039-00	s	METAL, CHIP 390 5% 1/10W	
R238	1-216-039-00	s	METAL, CHIP 390 5% 1/10W	
R239	1-216-049-91	s	METAL, CHIP 1k 5% 1/10W	
R240	1-216-049-91	s	METAL, CHIP 1k 5% 1/10W	
R241	1-216-033-00	s	METAL, CHIP 220 5% 1/10W	
R243	1-216-073-00	s	METAL, CHIP 10k 5% 1/10W	
R244	1-216-049-91	s	METAL, CHIP 1k 5% 1/10W	
R245	1-216-073-00	s	METAL, CHIP 10k 5% 1/10W	
R246	1-216-073-00	s	METAL, CHIP 10k 5% 1/10W	
R247	1-216-295-91	s	RES, CHIP 0	
R248	1-216-025-91	s	METAL, CHIP 100 5% 1/10W	
R301	1-216-065-91	s	METAL, CHIP 4.7k 5% 1/10W	
R302	1-216-013-00	s	METAL, CHIP 33 5% 1/10W	
R303	1-216-069-00	s	METAL, CHIP 6.8k 5% 1/10W	
R304	1-216-049-91	s	METAL, CHIP 1k 5% 1/10W	
R305	1-216-021-00	s	METAL, CHIP 68 5% 1/10W	
R306	1-216-049-91	s	METAL, CHIP 1k 5% 1/10W	
R307	1-216-113-00	s	METAL, CHIP 470k 5% 1/10W	
R308	1-216-077-00	s	METAL, CHIP 15k 5% 1/10W	
R309	1-216-073-00	s	METAL, CHIP 10k 5% 1/10W	
R310	1-216-113-00	s	METAL, CHIP 470k 5% 1/10W	
R311	1-216-039-00	s	METAL, CHIP 390 5% 1/10W	
R312	1-216-039-00	s	METAL, CHIP 390 5% 1/10W	
R313	1-216-684-91	s	METAL, CHIP 24k 0.5% 1/10W	
R314	1-216-684-91	s	METAL, CHIP 24k 0.5% 1/10W	
R315	1-216-075-00	s	METAL, CHIP 12k 5% 1/10W	
R316	1-216-049-91	s	METAL, CHIP 1k 5% 1/10W	
R318	1-216-295-91	s	RES, CHIP 0	
R319	1-216-089-91	s	METAL, CHIP 47k 5% 1/10W	
R320	1-216-075-00	s	METAL, CHIP 12k 5% 1/10W	
R321	1-216-037-00	s	METAL, CHIP 330 5% 1/10W	
R322	1-216-037-00	s	METAL, CHIP 330 5% 1/10W	
R323	1-216-037-00	s	METAL, CHIP 330 5% 1/10W	
R324	1-216-037-00	s	METAL, CHIP 330 5% 1/10W	
R325	1-216-037-00	s	METAL, CHIP 330 5% 1/10W	
R326	1-216-041-00	s	METAL, CHIP 470 5% 1/10W	
R327	1-216-636-11	s	METAL, CHIP 240 0.5% 1/10W	
R328	1-216-295-91	s	RES, CHIP 0	
R329	1-216-636-11	s	METAL, CHIP 240 0.5% 1/10W	
R330	1-216-057-00	s	METAL, CHIP 2.2k 5% 1/10W	
R331	1-216-065-91	s	METAL, CHIP 4.7k 5% 1/10W	
R332	1-216-025-91	s	METAL, CHIP 100 5% 1/10W	
R333	1-216-027-00	s	METAL, CHIP 120 5% 1/10W	
R334	1-216-077-00	s	METAL, CHIP 15k 5% 1/10W	
R335	1-216-057-00	s	METAL, CHIP 2.2k 5% 1/10W	
R336	1-216-065-91	s	METAL, CHIP 4.7k 5% 1/10W	
R337	1-216-025-91	s	METAL, CHIP 100 5% 1/10W	
R338	1-216-682-11	s	METAL, CHIP 20k 0.5% 1/10W	
R339	1-216-027-00	s	METAL, CHIP 120 5% 1/10W	
R340	1-216-683-11	s	METAL, CHIP 22k 0.5% 1/10W	
R341	1-216-295-91	s	RES, CHIP 0	
R342	1-216-073-00	s	METAL, CHIP 10k 5% 1/10W	
R343	1-216-073-00	s	METAL, CHIP 10k 5% 1/10W	
R344	1-216-073-00	s	METAL, CHIP 10k 5% 1/10W	*1)
R345	1-216-041-00	s	METAL, CHIP 470 5% 1/10W	
R401	1-216-021-00	s	METAL, CHIP 68 5% 1/10W	
R402	1-216-065-91	s	METAL, CHIP 4.7k 5% 1/10W	

(RP-101 BOARD; Suffix -13, 14)

Ref. No. or Q'ty	Part No.	SP	Description	
R403	1-216-013-00	s	METAL, CHIP 33 5% 1/10W	
R404	1-216-069-00	s	METAL, CHIP 6.8k 5% 1/10W	
R405	1-216-049-91	s	METAL, CHIP 1k 5% 1/10W	
R406	1-216-049-91	s	METAL, CHIP 1k 5% 1/10W	
R407	1-216-113-00	s	METAL, CHIP 470k 5% 1/10W	
R408	1-216-113-00	s	METAL, CHIP 470k 5% 1/10W	
R409	1-216-077-00	s	METAL, CHIP 15k 5% 1/10W	
R410	1-216-073-00	s	METAL, CHIP 10k 5% 1/10W	
R411	1-216-684-91	s	METAL, CHIP 24k 0.5% 1/10W	
R412	1-216-039-00	s	METAL, CHIP 390 5% 1/10W	
R413	1-216-039-00	s	METAL, CHIP 390 5% 1/10W	
R414	1-216-684-91	s	METAL, CHIP 24k 0.5% 1/10W	
R415	1-216-075-00	s	METAL, CHIP 12k 5% 1/10W	
R416	1-216-049-91	s	METAL, CHIP 1k 5% 1/10W	
R418	1-216-295-91	s	RES, CHIP 0	
R419	1-216-089-91	s	METAL, CHIP 47k 5% 1/10W	
R420	1-216-075-00	s	METAL, CHIP 12k 5% 1/10W	
R421	1-216-037-00	s	METAL, CHIP 330 5% 1/10W	
R422	1-216-037-00	s	METAL, CHIP 330 5% 1/10W	
R423	1-216-037-00	s	METAL, CHIP 330 5% 1/10W	
R424	1-216-037-00	s	METAL, CHIP 330 5% 1/10W	
R425	1-216-037-00	s	METAL, CHIP 330 5% 1/10W	
R426	1-216-041-00	s	METAL, CHIP 470 5% 1/10W	
R427	1-216-636-11	s	METAL, CHIP 240 0.5% 1/10W	
R428	1-216-295-91	s	RES, CHIP 0	
R429	1-216-636-11	s	METAL, CHIP 240 0.5% 1/10W	
R430	1-216-057-00	s	METAL, CHIP 2.2k 5% 1/10W	
R431	1-216-065-91	s	METAL, CHIP 4.7k 5% 1/10W	
R432	1-216-025-91	s	METAL, CHIP 100 5% 1/10W	
R433	1-216-027-00	s	METAL, CHIP 120 5% 1/10W	
R434	1-216-101-00	s	METAL, CHIP 150k 5% 1/10W	
R435	1-216-057-00	s	METAL, CHIP 2.2k 5% 1/10W	
R436	1-216-065-91	s	METAL, CHIP 4.7k 5% 1/10W	
R437	1-216-025-91	s	METAL, CHIP 100 5% 1/10W	
R438	1-216-682-11	s	METAL, CHIP 20k 0.5% 1/10W	
R439	1-216-027-00	s	METAL, CHIP 120 5% 1/10W	
R440	1-216-683-11	s	METAL, CHIP 22k 0.5% 1/10W	
R441	1-216-073-00	s	METAL, CHIP 10k 5% 1/10W	
R442	1-216-073-00	s	METAL, CHIP 10k 5% 1/10W	
R443	1-216-029-00	s	METAL, CHIP 150 5% 1/10W	*1)
	1-216-639-11	s	METAL, CHIP 330 0.5% 1/10W	*2)
R446	1-216-295-91	s	RES, CHIP 0	
R447	1-216-041-00	s	METAL, CHIP 470 5% 1/10W	
R502	1-216-065-91	s	METAL, CHIP 4.7k 5% 1/10W	
R503	1-216-013-00	s	METAL, CHIP 33 5% 1/10W	
R504	1-216-069-00	s	METAL, CHIP 6.8k 5% 1/10W	
R505	1-216-049-91	s	METAL, CHIP 1k 5% 1/10W	
R506	1-216-021-00	s	METAL, CHIP 68 5% 1/10W	
R507	1-216-049-91	s	METAL, CHIP 1k 5% 1/10W	
R508	1-216-113-00	s	METAL, CHIP 470k 5% 1/10W	
R509	1-216-077-00	s	METAL, CHIP 15k 5% 1/10W	
R510	1-216-073-00	s	METAL, CHIP 10k 5% 1/10W	
R511	1-216-113-00	s	METAL, CHIP 470k 5% 1/10W	
R512	1-216-039-00	s	METAL, CHIP 390 5% 1/10W	
R513	1-216-039-00	s	METAL, CHIP 390 5% 1/10W	
R514	1-216-684-91	s	METAL, CHIP 24k 0.5% 1/10W	
R515	1-216-684-91	s	METAL, CHIP 24k 0.5% 1/10W	
R516	1-216-075-00	s	METAL, CHIP 12k 5% 1/10W	

(RP-101 BOARD; Suffix -13, 14)

Ref. No. or Q'ty	Part No.	SP	Description	
R517	1-216-042-00	s	METAL, CHIP 510 5% 1/10W	
R519	1-216-295-91	s	RES, CHIP 0	
R520	1-216-089-91	s	METAL, CHIP 47k 5% 1/10W	
R521	1-216-075-00	s	METAL, CHIP 12k 5% 1/10W	
R522	1-216-037-00	s	METAL, CHIP 330 5% 1/10W	
R523	1-216-037-00	s	METAL, CHIP 330 5% 1/10W	
R524	1-216-037-00	s	METAL, CHIP 330 5% 1/10W	
R525	1-216-037-00	s	METAL, CHIP 330 5% 1/10W	
R526	1-216-037-00	s	METAL, CHIP 330 5% 1/10W	
R527	1-216-041-00	s	METAL, CHIP 470 5% 1/10W	
R528	1-216-636-11	s	METAL, CHIP 240 0.5% 1/10W	
R529	1-216-295-91	s	RES, CHIP 0	
R530	1-216-636-11	s	METAL, CHIP 240 0.5% 1/10W	
R531	1-216-057-00	s	METAL, CHIP 2.2k 5% 1/10W	
R532	1-216-065-91	s	METAL, CHIP 4.7k 5% 1/10W	
R533	1-216-025-91	s	METAL, CHIP 100 5% 1/10W	
R534	1-216-027-00	s	METAL, CHIP 120 5% 1/10W	
R535	1-216-101-00	s	METAL, CHIP 150k 5% 1/10W	
R536	1-216-057-00	s	METAL, CHIP 2.2k 5% 1/10W	
R537	1-216-295-91	s	RES, CHIP 0	
R538	1-216-065-91	s	METAL, CHIP 4.7k 5% 1/10W	
R539	1-216-025-91	s	METAL, CHIP 100 5% 1/10W	
R540	1-216-682-11	s	METAL, CHIP 20k 0.5% 1/10W	
R541	1-216-027-00	s	METAL, CHIP 120 5% 1/10W	
R542	1-216-081-00	s	METAL, CHIP 22k 5% 1/10W	
R543	1-216-073-00	s	METAL, CHIP 10k 5% 1/10W	
R544	1-216-073-00	s	METAL, CHIP 10k 5% 1/10W	
R545	1-216-029-00	s	METAL, CHIP 150 5% 1/10W	*1)
	1-216-639-11	s	METAL, CHIP 330 0.5% 1/10W	*2)
R548	1-216-295-91	s	RES, CHIP 0	
R549	1-216-041-00	s	METAL, CHIP 470 5% 1/10W	
R601	1-216-057-00	s	METAL, CHIP 2.2k 5% 1/10W	
R602	1-216-035-00	s	METAL, CHIP 270 5% 1/10W	
R603	1-216-025-91	s	METAL, CHIP 100 5% 1/10W	
R604	1-216-089-91	s	METAL, CHIP 47k 5% 1/10W	
R605	1-216-089-91	s	METAL, CHIP 47k 5% 1/10W	
R606	1-216-121-91	s	METAL, CHIP 1M 5% 1/10W	
R608	1-216-295-91	s	RES, CHIP 0	
R609	1-216-295-91	s	RES, CHIP 0	
R611	1-216-295-91	s	RES, CHIP 0	
R701	1-216-025-91	s	METAL, CHIP 100 5% 1/10W	
R702	1-216-025-91	s	METAL, CHIP 100 5% 1/10W	
R703	1-216-025-91	s	METAL, CHIP 100 5% 1/10W	
R704	1-216-089-91	s	METAL, CHIP 47k 5% 1/10W	
R705	1-216-049-91	s	METAL, CHIP 1k 5% 1/10W	
R706	1-216-295-91	s	RES, CHIP 0	
R707	1-216-627-11	s	METAL, CHIP 100 0.5% 1/10W	
R708	1-216-097-91	s	METAL, CHIP 100k 5% 1/10W	
R709	1-216-049-91	s	METAL, CHIP 1k 5% 1/10W	
R710	1-216-049-91	s	METAL, CHIP 1k 5% 1/10W	
R711	1-216-097-91	s	METAL, CHIP 100k 5% 1/10W	
R714	1-216-057-00	s	METAL, CHIP 2.2k 5% 1/10W	
R718	1-216-057-00	s	METAL, CHIP 2.2k 5% 1/10W	
R720	1-216-071-00	s	METAL, CHIP 8.2k 5% 1/10W	
R721	1-216-075-00	s	METAL, CHIP 12k 5% 1/10W	
R724	1-216-073-00	s	METAL, CHIP 10k 5% 1/10W	
R725	1-216-073-00	s	METAL, CHIP 10k 5% 1/10W	
R728	1-216-085-00	s	METAL, CHIP 33k 5% 1/10W	

(RP-101 BOARD; Suffix -13, 14)

Ref. No. or Q'ty	Part No.	SP	Description
R730	1-216-073-00	s	METAL, CHIP 10k 5% 1/10W
R731	1-216-081-00	s	METAL, CHIP 22k 5% 1/10W
R732	1-216-081-00	s	METAL, CHIP 22k 5% 1/10W
R736	1-216-085-00	s	METAL, CHIP 33k 5% 1/10W
R738	1-216-075-00	s	METAL, CHIP 12k 5% 1/10W
R740	1-216-037-00	s	METAL, CHIP 330 5% 1/10W
R741	1-216-073-00	s	METAL, CHIP 10k 5% 1/10W
R742	1-216-073-00	s	METAL, CHIP 10k 5% 1/10W
R746	1-216-073-00	s	METAL, CHIP 10k 5% 1/10W
R748	1-216-049-91	s	METAL, CHIP 1k 5% 1/10W
R790	1-216-295-91	s	RES, CHIP 0
RB101	1-239-412-11	s	RESISTOR BLOCK, CHIP 100 x 4
RB102	1-239-412-11	s	RESISTOR BLOCK, CHIP 100 x 4
RB103	1-236-908-11	s	RESISTOR BLOCK, CHIP 10k x 4
RB104	1-239-412-11	s	RESISTOR BLOCK, CHIP 100 x 4
RB105	1-239-412-11	s	RESISTOR BLOCK, CHIP 100 x 4
RB201	1-239-412-11	s	RESISTOR BLOCK, CHIP 100 x 4
RB202	1-239-412-11	s	RESISTOR BLOCK, CHIP 100 x 4
RB203	1-239-412-11	s	RESISTOR BLOCK, CHIP 100 x 4
RB601	1-239-412-11	s	RESISTOR BLOCK, CHIP 100 x 4
RB602	1-239-412-11	s	RESISTOR BLOCK, CHIP 100 x 4
RB603	1-239-412-11	s	RESISTOR BLOCK, CHIP 100 x 4
RB604	1-239-412-11	s	RESISTOR BLOCK, CHIP 100 x 4
RB605	1-239-412-11	s	RESISTOR BLOCK, CHIP 100 x 4
RB606	1-239-412-11	s	RESISTOR BLOCK, CHIP 100 x 4
RB607	1-239-412-11	s	RESISTOR BLOCK, CHIP 100 x 4
RB701	1-239-412-11	s	RESISTOR BLOCK, CHIP 100 x 4
RB702	1-239-412-11	s	RESISTOR BLOCK, CHIP 100 x 4

RP-101 BOARD; Suffix -11, 12

Ref. No.
or Q'ty Part No. SP Description

This list corresponds to the board suffix numbers -11 and 12.

Ref. No. or Q'ty	Part No.	SP	Description
1pc	A-8315-285-A	s	MOUNTED CIRCUIT BOARD, RP-101

The RP-101 board with board suffix numbers -11 and -12 includes the DUS-131 board.
See the list in the DUS-131 board for details.

Ref. No. or Q'ty	Part No.	SP	Description
1pc	7-682-903-11	s	SCREW +PWH 3x6
1pc	3-179-084-01	s	LEVER (R), PRINTED CIRCUIT BOARD
1pc	3-179-085-01	s	LEVER (L), PRINTED CIRCUIT BOARD
C11	1-163-038-91	s	CERAMIC, CHIP 0.1uF 25V
C12	1-163-038-91	s	CERAMIC, CHIP 0.1uF 25V
C13	1-163-038-91	s	CERAMIC, CHIP 0.1uF 25V
C14	1-163-038-91	s	CERAMIC, CHIP 0.1uF 25V
C15	1-163-038-91	s	CERAMIC, CHIP 0.1uF 25V
C16	1-104-851-11	s	TANTALUM, CHIP 10uF 20% 10V
C17	1-126-396-11	s	ELECT, CHIP 47uF 20% 16V
C102	1-163-038-91	s	CERAMIC, CHIP 0.1uF 25V
C103	1-163-038-91	s	CERAMIC, CHIP 0.1uF 25V
C104	1-163-275-11	s	CERAMIC, CHIP 0.001uF 5% 50V
C105	1-163-038-91	s	CERAMIC, CHIP 0.1uF 25V
C106	1-163-038-91	s	CERAMIC, CHIP 0.1uF 25V
C107	1-163-038-91	s	CERAMIC, CHIP 0.1uF 25V
C108	1-163-038-91	s	CERAMIC, CHIP 0.1uF 25V
C109	1-163-038-91	s	CERAMIC, CHIP 0.1uF 25V
C110	1-163-038-91	s	CERAMIC, CHIP 0.1uF 25V
C111	1-163-038-91	s	CERAMIC, CHIP 0.1uF 25V
C113	1-163-251-11	s	CERAMIC, CHIP 100pF 5% 50V
C114	1-163-275-11	s	CERAMIC, CHIP 0.001uF 5% 50V
C115	1-126-390-11	s	ELECT, CHIP 22uF 20% 6.3V
C116	1-164-232-11	s	CERAMIC, CHIP 0.01uF 10% 100V
C117	1-163-038-91	s	CERAMIC, CHIP 0.1uF 25V
C118	1-135-145-11	s	TANTALUM, CHIP 0.47uF 10% 35V
C119	1-163-038-91	s	CERAMIC, CHIP 0.1uF 25V
C120	1-163-038-91	s	CERAMIC, CHIP 0.1uF 25V
C121	1-126-396-11	s	ELECT, CHIP 47uF 20% 16V
C122	1-126-396-11	s	ELECT, CHIP 47uF 20% 16V
C127	1-163-038-91	s	CERAMIC, CHIP 0.1uF 25V
C128	1-163-038-91	s	CERAMIC, CHIP 0.1uF 25V
C129	1-163-251-11	s	CERAMIC, CHIP 100pF 5% 50V
C130	1-163-038-91	s	CERAMIC, CHIP 0.1uF 25V
C131	1-163-038-91	s	CERAMIC, CHIP 0.1uF 25V
C132	1-163-275-11	s	CERAMIC, CHIP 0.001uF 5% 50V
C133	1-163-243-11	s	CERAMIC, CHIP 47pF 5% 50V
C136	1-126-394-11	s	ELECT, CHIP 10uF 20% 16V
C201	1-110-569-11	s	TANTALUM, CHIP 47uF 20% 6.3V
C202	1-110-569-11	s	TANTALUM, CHIP 47uF 20% 6.3V
C203	1-163-038-91	s	CERAMIC, CHIP 0.1uF 25V
C204	1-163-038-91	s	CERAMIC, CHIP 0.1uF 25V
C205	1-163-038-91	s	CERAMIC, CHIP 0.1uF 25V
C206	1-163-038-91	s	CERAMIC, CHIP 0.1uF 25V
C207	1-163-038-91	s	CERAMIC, CHIP 0.1uF 25V
C208	1-163-038-91	s	CERAMIC, CHIP 0.1uF 25V
C209	1-163-038-91	s	CERAMIC, CHIP 0.1uF 25V
C210	1-163-224-11	s	CERAMIC, CHIP 7pF 50V
C211	1-163-224-11	s	CERAMIC, CHIP 7pF 50V
C212	1-163-224-11	s	CERAMIC, CHIP 7pF 50V

(RP-101 BOARD; Suffix -11, 12)

Ref. No. or Q'ty	Part No.	SP	Description
C213	1-126-396-11	s	ELECT, CHIP 47uF 20% 16V
C214	1-163-038-91	s	CERAMIC, CHIP 0.1uF 25V
C215	1-163-038-91	s	CERAMIC, CHIP 0.1uF 25V
C216	1-126-392-11	s	ELECT, CHIP 100uF 20% 6.3V
C217	1-163-038-91	s	CERAMIC, CHIP 0.1uF 25V
C218	1-126-392-11	s	ELECT, CHIP 100uF 20% 6.3V
C219	1-126-392-11	s	ELECT, CHIP 100uF 20% 6.3V
C220	1-163-038-91	s	CERAMIC, CHIP 0.1uF 25V
C221	1-163-038-91	s	CERAMIC, CHIP 0.1uF 25V
C303	1-163-038-91	s	CERAMIC, CHIP 0.1uF 25V
C304	1-163-038-91	s	CERAMIC, CHIP 0.1uF 25V
C306	1-104-851-11	s	TANTALUM, CHIP 10uF 20% 10V
C307	1-163-038-91	s	CERAMIC, CHIP 0.1uF 25V
C308	1-104-851-11	s	TANTALUM, CHIP 10uF 20% 10V
C309	1-163-038-91	s	CERAMIC, CHIP 0.1uF 25V
C310	1-163-251-11	s	CERAMIC, CHIP 100pF 5% 50V
C311	1-163-989-11	s	CERAMIC, CHIP 0.033uF 10% 25V
C312	1-163-989-11	s	CERAMIC, CHIP 0.033uF 10% 25V
C313	1-164-232-11	s	CERAMIC, CHIP 0.01uF 10% 100V
C314	1-163-038-91	s	CERAMIC, CHIP 0.1uF 25V
C315	1-164-232-11	s	CERAMIC, CHIP 0.01uF 10% 100V
C316	1-163-275-11	s	CERAMIC, CHIP 0.001uF 5% 50V
C317	1-163-243-11	s	CERAMIC, CHIP 47pF 5% 50V
C319	1-163-091-00	s	CERAMIC, CHIP 8pF 50V
C322	1-164-232-11	s	CERAMIC, CHIP 0.01uF 10% 100V
C323	1-164-232-11	s	CERAMIC, CHIP 0.01uF 10% 100V
C324	1-164-232-11	s	CERAMIC, CHIP 0.01uF 10% 100V
C325	1-164-232-11	s	CERAMIC, CHIP 0.01uF 10% 100V
C326	1-164-232-11	s	CERAMIC, CHIP 0.01uF 10% 100V
C327	1-164-232-11	s	CERAMIC, CHIP 0.01uF 10% 100V
C328	1-164-232-11	s	CERAMIC, CHIP 0.01uF 10% 100V
C329	1-164-232-11	s	CERAMIC, CHIP 0.01uF 10% 100V
C330	1-104-851-11	s	TANTALUM, CHIP 10uF 20% 10V
C331	1-164-232-11	s	CERAMIC, CHIP 0.01uF 10% 100V
C332	1-163-133-00	s	CERAMIC, CHIP 470pF 5% 50V
C333	1-163-038-91	s	CERAMIC, CHIP 0.1uF 25V
C334	1-164-232-11	s	CERAMIC, CHIP 0.01uF 10% 100V
C335	1-164-232-11	s	CERAMIC, CHIP 0.01uF 10% 100V
C336	1-164-232-11	s	CERAMIC, CHIP 0.01uF 10% 100V
C337	1-164-232-11	s	CERAMIC, CHIP 0.01uF 10% 100V
C338	1-163-121-00	s	CERAMIC, CHIP 150pF 5% 50V
C339	1-164-232-11	s	CERAMIC, CHIP 0.01uF 10% 100V
C340	1-164-232-11	s	CERAMIC, CHIP 0.01uF 10% 100V
C341	1-163-121-00	s	CERAMIC, CHIP 150pF 5% 50V
C342	1-163-038-91	s	CERAMIC, CHIP 0.1uF 25V
C343	1-104-851-11	s	TANTALUM, CHIP 10uF 20% 10V
C344	1-163-038-91	s	CERAMIC, CHIP 0.1uF 25V
C345	1-164-232-11	s	CERAMIC, CHIP 0.01uF 10% 100V
C346	1-163-016-00	s	CERAMIC CHIP 0.0039MF 10% 50V
C347	1-163-020-00	s	CERAMIC, CHIP 0.0082uF 10% 50V
C348	1-163-243-11	s	CERAMIC, CHIP 47pF 5% 50V
C349	1-164-182-11	s	CERAMIC, CHIP 3300pF 10% 100V
C350	1-164-232-11	s	CERAMIC, CHIP 0.01uF 10% 100V
C351	1-163-243-11	s	CERAMIC, CHIP 47pF 5% 50V
C352	1-163-016-00	s	CERAMIC CHIP 0.0039MF 10% 50V
C353	1-163-020-00	s	CERAMIC, CHIP 0.0082uF 10% 50V
C354	1-164-232-11	s	CERAMIC, CHIP 0.01uF 10% 100V
C355	1-164-182-11	s	CERAMIC, CHIP 3300pF 10% 100V
C356	1-164-232-11	s	CERAMIC, CHIP 0.01uF 10% 100V

(RP-101 BOARD; Suffix -11, 12)

Ref. No. or Q'ty	Part No.	SP	Description
C357	1-164-232-11	s	CERAMIC, CHIP 0.01uF 10% 100V
C358	1-163-038-91	s	CERAMIC, CHIP 0.1uF 25V
C359	1-104-851-11	s	TANTALUM, CHIP 10uF 20% 10V
C360	1-164-232-11	s	CERAMIC, CHIP 0.01uF 10% 100V
C361	1-104-851-11	s	TANTALUM, CHIP 10uF 20% 10V
C362	1-163-038-91	s	CERAMIC, CHIP 0.1uF 25V
C363	1-163-038-91	s	CERAMIC, CHIP 0.1uF 25V
C364	1-163-038-91	s	CERAMIC, CHIP 0.1uF 25V
C365	1-104-851-11	s	TANTALUM, CHIP 10uF 20% 10V
C401	1-164-232-11	s	CERAMIC, CHIP 0.01uF 10% 100V
C402	1-164-232-11	s	CERAMIC, CHIP 0.01uF 10% 100V
C403	1-104-851-11	s	TANTALUM, CHIP 10uF 20% 10V
C406	1-163-038-91	s	CERAMIC, CHIP 0.1uF 25V
C407	1-104-851-11	s	TANTALUM, CHIP 10uF 20% 10V
C408	1-163-251-11	s	CERAMIC, CHIP 100pF 5% 50V
C409	1-163-038-91	s	CERAMIC, CHIP 0.1uF 25V
C410	1-163-989-11	s	CERAMIC, CHIP 0.033uF 10% 25V
C411	1-163-989-11	s	CERAMIC, CHIP 0.033uF 10% 25V
C412	1-164-232-11	s	CERAMIC, CHIP 0.01uF 10% 100V
C413	1-163-038-91	s	CERAMIC, CHIP 0.1uF 25V
C414	1-164-232-11	s	CERAMIC, CHIP 0.01uF 10% 100V
C415	1-163-275-11	s	CERAMIC, CHIP 0.001uF 5% 50V
C416	1-163-243-11	s	CERAMIC, CHIP 47pF 5% 50V
C418	1-163-091-00	s	CERAMIC, CHIP 8pF 50V
C420	1-164-232-11	s	CERAMIC, CHIP 0.01uF 10% 100V
C421	1-164-232-11	s	CERAMIC, CHIP 0.01uF 10% 100V
C423	1-164-232-11	s	CERAMIC, CHIP 0.01uF 10% 100V
C424	1-164-232-11	s	CERAMIC, CHIP 0.01uF 10% 100V
C425	1-164-232-11	s	CERAMIC, CHIP 0.01uF 10% 100V
C426	1-164-232-11	s	CERAMIC, CHIP 0.01uF 10% 100V
C427	1-164-232-11	s	CERAMIC, CHIP 0.01uF 10% 100V
C428	1-164-232-11	s	CERAMIC, CHIP 0.01uF 10% 100V
C429	1-104-851-11	s	TANTALUM, CHIP 10uF 20% 10V
C430	1-164-232-11	s	CERAMIC, CHIP 0.01uF 10% 100V
C431	1-163-133-00	s	CERAMIC, CHIP 470pF 5% 50V
C432	1-163-038-91	s	CERAMIC, CHIP 0.1uF 25V
C433	1-164-232-11	s	CERAMIC, CHIP 0.01uF 10% 100V
C434	1-164-232-11	s	CERAMIC, CHIP 0.01uF 10% 100V
C435	1-164-232-11	s	CERAMIC, CHIP 0.01uF 10% 100V
C436	1-164-232-11	s	CERAMIC, CHIP 0.01uF 10% 100V
C441	1-163-121-00	s	CERAMIC, CHIP 150pF 5% 50V
C442	1-164-232-11	s	CERAMIC, CHIP 0.01uF 10% 100V
C443	1-164-232-11	s	CERAMIC, CHIP 0.01uF 10% 100V
C444	1-163-121-00	s	CERAMIC, CHIP 150pF 5% 50V
C445	1-163-038-91	s	CERAMIC, CHIP 0.1uF 25V
C446	1-104-851-11	s	TANTALUM, CHIP 10uF 20% 10V
C447	1-163-038-91	s	CERAMIC, CHIP 0.1uF 25V
C448	1-164-232-11	s	CERAMIC, CHIP 0.01uF 10% 100V
C449	1-163-016-00	s	CERAMIC CHIP 0.0039MF 10% 50V
C450	1-163-020-00	s	CERAMIC, CHIP 0.0082uF 10% 50V
C451	1-163-243-11	s	CERAMIC, CHIP 47pF 5% 50V
C452	1-164-182-11	s	CERAMIC, CHIP 3300pF 10% 100V
C453	1-164-232-11	s	CERAMIC, CHIP 0.01uF 10% 100V
C454	1-163-243-11	s	CERAMIC, CHIP 47pF 5% 50V
C455	1-163-016-00	s	CERAMIC CHIP 0.0039MF 10% 50V
C456	1-163-020-00	s	CERAMIC, CHIP 0.0082uF 10% 50V
C457	1-164-232-11	s	CERAMIC, CHIP 0.01uF 10% 100V
C458	1-164-182-11	s	CERAMIC, CHIP 3300pF 10% 100V
C459	1-164-232-11	s	CERAMIC, CHIP 0.01uF 10% 100V

(RP-101 BOARD; Suffix -11, 12)

Ref. No. or Q'ty	Part No.	SP	Description
C460	1-164-232-11	s	CERAMIC, CHIP 0.01uF 10% 100V
C461	1-163-038-91	s	CERAMIC, CHIP 0.1uF 25V
C462	1-104-851-11	s	TANTALUM, CHIP 10uF 20% 10V
C463	1-164-232-11	s	CERAMIC, CHIP 0.01uF 10% 100V
C464	1-104-851-11	s	TANTALUM, CHIP 10uF 20% 10V
C465	1-163-038-91	s	CERAMIC, CHIP 0.1uF 25V
C466	1-163-038-91	s	CERAMIC, CHIP 0.1uF 25V
C467	1-163-038-91	s	CERAMIC, CHIP 0.1uF 25V
C468	1-104-851-11	s	TANTALUM, CHIP 10uF 20% 10V
C469	1-163-017-00	s	CERAMIC, CHIP 0.0047uF 5% 50V
C470	1-163-038-91	s	CERAMIC, CHIP 0.1uF 25V
C502	1-163-038-91	s	CERAMIC, CHIP 0.1uF 25V
C503	1-104-851-11	s	TANTALUM, CHIP 10uF 20% 10V
C506	1-163-038-91	s	CERAMIC, CHIP 0.1uF 25V
C507	1-104-851-11	s	TANTALUM, CHIP 10uF 20% 10V
C508	1-163-251-11	s	CERAMIC, CHIP 100pF 5% 50V
C509	1-163-038-91	s	CERAMIC, CHIP 0.1uF 25V
C510	1-163-989-11	s	CERAMIC, CHIP 0.033uF 10% 25V
C511	1-163-989-11	s	CERAMIC, CHIP 0.033uF 10% 25V
C512	1-164-232-11	s	CERAMIC, CHIP 0.01uF 10% 100V
C513	1-163-038-91	s	CERAMIC, CHIP 0.1uF 25V
C514	1-164-232-11	s	CERAMIC, CHIP 0.01uF 10% 100V
C515	1-163-275-11	s	CERAMIC, CHIP 0.001uF 5% 50V
C516	1-163-243-11	s	CERAMIC, CHIP 47pF 5% 50V
C518	1-163-091-00	s	CERAMIC, CHIP 8pF 50V
C521	1-164-232-11	s	CERAMIC, CHIP 0.01uF 10% 100V
C522	1-164-232-11	s	CERAMIC, CHIP 0.01uF 10% 100V
C523	1-164-232-11	s	CERAMIC, CHIP 0.01uF 10% 100V
C524	1-164-232-11	s	CERAMIC, CHIP 0.01uF 10% 100V
C525	1-164-232-11	s	CERAMIC, CHIP 0.01uF 10% 100V
C526	1-164-232-11	s	CERAMIC, CHIP 0.01uF 10% 100V
C527	1-164-232-11	s	CERAMIC, CHIP 0.01uF 10% 100V
C528	1-164-232-11	s	CERAMIC, CHIP 0.01uF 10% 100V
C529	1-104-851-11	s	TANTALUM, CHIP 10uF 20% 10V
C530	1-164-232-11	s	CERAMIC, CHIP 0.01uF 10% 100V
C531	1-163-133-00	s	CERAMIC, CHIP 470pF 5% 50V
C532	1-163-038-91	s	CERAMIC, CHIP 0.1uF 25V
C533	1-164-232-11	s	CERAMIC, CHIP 0.01uF 10% 100V
C534	1-164-232-11	s	CERAMIC, CHIP 0.01uF 10% 100V
C535	1-164-232-11	s	CERAMIC, CHIP 0.01uF 10% 100V
C536	1-164-232-11	s	CERAMIC, CHIP 0.01uF 10% 100V
C537	1-163-121-00	s	CERAMIC, CHIP 150pF 5% 50V
C538	1-164-232-11	s	CERAMIC, CHIP 0.01uF 10% 100V
C539	1-164-232-11	s	CERAMIC, CHIP 0.01uF 10% 100V
C540	1-163-121-00	s	CERAMIC, CHIP 150pF 5% 50V
C541	1-163-038-91	s	CERAMIC, CHIP 0.1uF 25V
C542	1-104-851-11	s	TANTALUM, CHIP 10uF 20% 10V
C543	1-163-038-91	s	CERAMIC, CHIP 0.1uF 25V
C544	1-164-232-11	s	CERAMIC, CHIP 0.01uF 10% 100V
C545	1-163-016-00	s	CERAMIC CHIP 0.0039MF 10% 50V
C546	1-163-020-00	s	CERAMIC, CHIP 0.0082uF 10% 50V
C547	1-163-243-11	s	CERAMIC, CHIP 47pF 5% 50V
C548	1-164-182-11	s	CERAMIC, CHIP 3300pF 10% 100V
C549	1-164-232-11	s	CERAMIC, CHIP 0.01uF 10% 100V
C550	1-163-243-11	s	CERAMIC, CHIP 47pF 5% 50V
C551	1-163-016-00	s	CERAMIC, CHIP 0.0039uF 10% 50V
C552	1-163-020-00	s	CERAMIC, CHIP 0.0082uF 10% 50V
C553	1-164-232-11	s	CERAMIC, CHIP 0.01uF 10% 100V
C554	1-164-182-11	s	CERAMIC, CHIP 3300pF 10% 100V

(RP-101 BOARD; Suffix -11, 12)

Ref. No. or Q'ty	Part No.	SP	Description
C555	1-164-232-11	s	CERAMIC, CHIP 0.01uF 10% 100V
C556	1-164-232-11	s	CERAMIC, CHIP 0.01uF 10% 100V
C557	1-163-038-91	s	CERAMIC, CHIP 0.1uF 25V
C558	1-104-851-11	s	TANTALUM, CHIP 10uF 20% 10V
C559	1-164-232-11	s	CERAMIC, CHIP 0.01uF 10% 100V
C560	1-104-851-11	s	TANTALUM, CHIP 10uF 20% 10V
C561	1-163-038-91	s	CERAMIC, CHIP 0.1uF 25V
C562	1-164-232-11	s	CERAMIC, CHIP 0.01uF 10% 100V
C563	1-163-038-91	s	CERAMIC, CHIP 0.1uF 25V
C564	1-104-851-11	s	TANTALUM, CHIP 10uF 20% 10V
C565	1-163-017-00	s	CERAMIC, CHIP 0.0047uF 5% 50V
C601	1-135-145-11	s	TANTALUM, CHIP 0.47uF 10% 35V
C602	1-104-851-11	s	TANTALUM, CHIP 10uF 20% 10V
C603	1-163-275-11	s	CERAMIC, CHIP 0.001uF 5% 50V
C604	1-164-232-11	s	CERAMIC, CHIP 0.01uF 10% 100V
C605	1-164-232-11	s	CERAMIC, CHIP 0.01uF 10% 100V
C606	1-163-038-91	s	CERAMIC, CHIP 0.1uF 25V
C607	1-163-275-11	s	CERAMIC, CHIP 0.001uF 5% 50V
C608	1-163-275-11	s	CERAMIC, CHIP 0.001uF 5% 50V
C609	1-163-038-91	s	CERAMIC, CHIP 0.1uF 25V
C610	1-104-851-11	s	TANTALUM, CHIP 10uF 20% 10V
C611	1-164-232-11	s	CERAMIC, CHIP 0.01uF 10% 100V
C612	1-163-038-91	s	CERAMIC, CHIP 0.1uF 25V
C613	1-163-251-11	s	CERAMIC, CHIP 100pF 5% 50V
C614	1-163-038-91	s	CERAMIC, CHIP 0.1uF 25V
C615	1-163-038-91	s	CERAMIC, CHIP 0.1uF 25V
C616	1-163-038-91	s	CERAMIC, CHIP 0.1uF 25V
C617	1-163-038-91	s	CERAMIC, CHIP 0.1uF 25V
C618	1-163-038-91	s	CERAMIC, CHIP 0.1uF 25V
C619	1-163-038-91	s	CERAMIC, CHIP 0.1uF 25V
C620	1-163-038-91	s	CERAMIC, CHIP 0.1uF 25V
C701	1-163-038-91	s	CERAMIC, CHIP 0.1uF 25V
C707	1-163-038-91	s	CERAMIC, CHIP 0.1uF 25V
C708	1-163-038-91	s	CERAMIC, CHIP 0.1uF 25V
C709	1-163-038-91	s	CERAMIC, CHIP 0.1uF 25V
C710	1-163-038-91	s	CERAMIC, CHIP 0.1uF 25V
C711	1-163-038-91	s	CERAMIC, CHIP 0.1uF 25V
C712	1-163-038-91	s	CERAMIC, CHIP 0.1uF 25V
C713	1-164-232-11	s	CERAMIC, CHIP 0.01uF 10% 100V
C714	1-164-232-11	s	CERAMIC, CHIP 0.01uF 10% 100V
C715	1-164-232-11	s	CERAMIC, CHIP 0.01uF 10% 100V
C716	1-164-232-11	s	CERAMIC, CHIP 0.01uF 10% 100V
C717	1-104-851-11	s	TANTALUM, CHIP 10uF 20% 10V
C718	1-104-851-11	s	TANTALUM, CHIP 10uF 20% 10V
C719	1-163-038-91	s	CERAMIC, CHIP 0.1uF 25V
C720	1-163-038-91	s	CERAMIC, CHIP 0.1uF 25V
C721	1-163-121-00	s	CERAMIC, CHIP 150pF 5% 50V
C722	1-163-121-00	s	CERAMIC, CHIP 150pF 5% 50V
C723	1-163-121-00	s	CERAMIC, CHIP 150pF 5% 50V
C724	1-163-121-00	s	CERAMIC, CHIP 150pF 5% 50V
C725	1-164-232-11	s	CERAMIC, CHIP 0.01uF 10% 100V
C726	1-164-232-11	s	CERAMIC, CHIP 0.01uF 10% 100V
C727	1-164-232-11	s	CERAMIC, CHIP 0.01uF 10% 100V
C728	1-164-232-11	s	CERAMIC, CHIP 0.01uF 10% 100V
C729	1-164-232-11	s	CERAMIC, CHIP 0.01uF 10% 100V
C730	1-164-232-11	s	CERAMIC, CHIP 0.01uF 10% 100V
C731	1-164-161-11	s	CERAMIC, CHIP 0.0022uF 10% 100V
C732	1-163-037-11	s	CERAMIC, CHIP 0.022uF 10% 25V
C733	1-104-851-11	s	TANTALUM, CHIP 10uF 20% 10V

(RP-101 BOARD; Suffix -11, 12)

Ref. No. or Q'ty	Part No.	SP	Description
C734	1-164-161-11	s	CERAMIC, CHIP 0.0022uF 10% 100V
C735	1-163-037-11	s	CERAMIC, CHIP 0.022uF 10% 25V
C736	1-104-851-11	s	TANTALUM, CHIP 10uF 20% 10V
C737	1-164-232-11	s	CERAMIC, CHIP 0.01uF 10% 100V
C738	1-164-232-11	s	CERAMIC, CHIP 0.01uF 10% 100V
C739	1-163-038-91	s	CERAMIC, CHIP 0.1uF 25V
C740	1-163-038-91	s	CERAMIC, CHIP 0.1uF 25V
C741	1-163-038-91	s	CERAMIC, CHIP 0.1uF 25V
C742	1-163-038-91	s	CERAMIC, CHIP 0.1uF 25V
C743	1-163-038-91	s	CERAMIC, CHIP 0.1uF 25V
CN1	1-566-621-11	o	CONNECTOR,PS 34P, FEMALE
CN116	1-778-262-11	o	CONNECTOR, BB 148P, MALE
D101	8-719-027-95	s	DIODE HSM88WK
D102	8-719-041-39	s	DIODE KV1470
D601	8-719-041-39	s	DIODE KV1470
D602	8-719-027-95	s	DIODE HSM88WK
FL301	1-411-274-21	s	DELAY LINE 23ns
FL302	1-233-343-21	s	FILTER, LOW-PASS 22MHz
FL303	1-233-344-21	s	FILTER, LOW-PASS 22MHz
FL401	1-411-274-21	s	DELAY LINE 23ns
FL402	1-233-343-21	s	FILTER, LOW-PASS 22MHz
FL403	1-233-344-21	s	FILTER, LOW-PASS 22MHz
FL501	1-411-274-21	s	DELAY LINE 23ns
FL502	1-233-343-21	s	FILTER, LOW-PASS 22MHz
FL503	1-233-344-21	s	FILTER, LOW-PASS 22MHz
FL701	1-233-351-21	s	FILTER, BAND-PASS 465kHz
FL702	1-233-350-21	s	FILTER, BAND-PASS 697kHz
FL703	1-233-351-21	s	FILTER, BAND-PASS 465kHz
FL704	1-233-350-21	s	FILTER, BAND-PASS 697kHz
IC11	8-759-259-77	s	IC PQ20VZ5U
IC101	8-752-360-44	s	IC CXK1203AR
IC102	8-759-080-03	s	IC TC74VHCT541FS(EL)
IC103	8-759-167-20	s	IC UPD42280GU-30
IC104	8-759-167-20	s	IC UPD42280GU-30
IC105	8-752-380-06	s	IC CXD2189AR-T6
IC106	8-759-080-02	s	IC TC74VHC541FS(EL)
IC107	8-759-080-02	s	IC TC74VHC541FS(EL)
IC110	8-752-380-06	s	IC CXD2189AR-T6
IC114	8-759-079-53	s	IC TC74VHCT08FS(EL)
IC115	8-759-079-52	s	IC TC74VHC08FS(EL)
IC116	8-759-079-52	s	IC TC74VHC08FS(EL)
IC117	8-759-080-02	s	IC TC74VHC541FS(EL)
IC118	8-759-196-97	s	IC TC7SH32FU-TE85R
IC201	8-759-079-52	s	IC TC74VHC08FS(EL)
IC202	8-759-079-74	s	IC TC74VHC157FS(EL)
IC203	8-759-079-62	s	IC TC74VHCT74FS(EL)
IC204	8-759-012-02	s	IC MC10H124M
IC205	8-759-012-00	s	IC MC10H116M
IC206	8-759-066-59	s	IC TC74HC4053AFS
IC207	8-759-066-61	s	IC TC4053BFS
IC208	8-759-453-98	s	IC CXD8668Q
IC209	8-759-268-95	s	IC SN74HCT00ANS-E05
IC301	8-752-070-11	s	IC CXA1761R
IC302	8-752-070-12	s	IC CXA1762Q
IC303	8-752-371-18	s	IC CXD2302Q
IC304	8-759-927-46	s	IC SN74HC00ANS
IC401	8-752-070-11	s	IC CXA1761R
IC403	8-752-070-12	s	IC CXA1762Q

(RP-101 BOARD; Suffix -11, 12)

Ref. No. or Q'ty	Part No.	SP	Description
IC404	8-752-371-18	s	IC CXD2302Q
IC450	8-759-196-97	s	IC TC7SH32FU-TE85R
IC501	8-752-070-11	s	IC CXA1761R
IC502	8-752-070-12	s	IC CXA1762Q
IC503	8-752-371-18	s	IC CXD2302Q
IC550	8-759-196-97	s	IC TC7SH32FU-TE85R
IC601	8-752-380-06	s	IC CXD2189AR-T6
IC602	8-752-380-06	s	IC CXD2189AR-T6
IC603	8-759-080-02	s	IC TC74VHC541FS(EL)
IC604	8-759-080-02	s	IC TC74VHC541FS(EL)
IC605	8-759-080-02	s	IC TC74VHC541FS(EL)
IC606	8-759-080-02	s	IC TC74VHC541FS(EL)
IC607	8-759-459-41	s	IC TMS4C2973-26DTR
IC608	8-759-459-41	s	IC TMS4C2973-26DTR
IC701	8-759-469-25	s	IC AK6440AF-E2
IC702	8-759-064-36	s	IC MB88346BPFV
IC703	8-759-064-36	s	IC MB88346BPFV
IC704	8-759-064-36	s	IC MB88346BPFV
IC705	8-759-100-96	s	IC UPC4558G2
IC706	8-759-300-71	s	IC HD14053BFP
IC707	8-759-062-66	s	IC TC7S66F
IC708	8-759-062-66	s	IC TC7S66F
IC709	8-759-327-00	s	IC CXA8044Q-T4
IC710	8-759-327-00	s	IC CXA8044Q-T4
L101	1-414-398-11	s	INDUCTOR, CHIP 10uH
L102	1-414-398-11	s	INDUCTOR, CHIP 10uH
L103	1-414-398-11	s	INDUCTOR, CHIP 10uH
L104	1-410-369-11	s	INDUCTOR, CHIP 1uH
L105	1-414-398-11	s	INDUCTOR, CHIP 10uH
L106	1-410-738-41	s	INDUCTOR, CHIP 0.56uH
L107	1-414-398-11	s	INDUCTOR, CHIP 10uH
L108	1-414-398-11	s	INDUCTOR, CHIP 10uH
L201	1-414-400-11	s	INDUCTOR, CHIP 22uH
L202	1-414-398-11	s	INDUCTOR, CHIP 10uH
L203	1-414-398-11	s	INDUCTOR, CHIP 10uH
L204	1-414-398-11	s	INDUCTOR, CHIP 10uH
L205	1-410-369-11	s	INDUCTOR, CHIP 1uH
L206	1-410-369-11	s	INDUCTOR, CHIP 1uH
L207	1-410-369-11	s	INDUCTOR, CHIP 1uH
L208	1-414-398-11	s	INDUCTOR, CHIP 10uH
L301	1-414-398-11	s	INDUCTOR, CHIP 10uH
L302	1-414-398-11	s	INDUCTOR, CHIP 10uH
L303	1-412-963-11	s	INDUCTOR, CHIP 100uH
L305	1-414-398-11	s	INDUCTOR, CHIP 10uH
L306	1-414-398-11	s	INDUCTOR, CHIP 10uH
L307	1-414-398-11	s	INDUCTOR, CHIP 10uH
L308	1-414-398-11	s	INDUCTOR, CHIP 10uH
L309	1-414-398-11	s	INDUCTOR, CHIP 10uH
L401	1-414-398-11	s	INDUCTOR, CHIP 10uH
L402	1-414-398-11	s	INDUCTOR, CHIP 10uH
L403	1-412-963-11	s	INDUCTOR, CHIP 100uH
L405	1-414-398-11	s	INDUCTOR, CHIP 10uH
L406	1-414-398-11	s	INDUCTOR, CHIP 10uH
L407	1-414-398-11	s	INDUCTOR, CHIP 10uH
L408	1-414-398-11	s	INDUCTOR, CHIP 10uH
L409	1-414-398-11	s	INDUCTOR, CHIP 10uH
L410	1-414-398-11	s	INDUCTOR, CHIP 10uH
L411	1-414-398-11	s	INDUCTOR, CHIP 10uH
L501	1-414-398-11	s	INDUCTOR, CHIP 10uH

(RP-101 BOARD; Suffix -11, 12)

Ref. No. or Q'ty	Part No.	SP	Description
L502	1-414-398-11	s	INDUCTOR, CHIP 10uH
L503	1-412-963-11	s	INDUCTOR, CHIP 100uH
L505	1-414-398-11	s	INDUCTOR, CHIP 10uH
L506	1-414-398-11	s	INDUCTOR, CHIP 10uH
L507	1-414-398-11	s	INDUCTOR, CHIP 10uH
L508	1-414-398-11	s	INDUCTOR, CHIP 10uH
L509	1-414-398-11	s	INDUCTOR, CHIP 10uH
L510	1-414-398-11	s	INDUCTOR, CHIP 10uH
L601	1-414-398-11	s	INDUCTOR, CHIP 10uH
L602	1-410-738-41	s	INDUCTOR, CHIP 0.56uH
L603	1-414-398-11	s	INDUCTOR, CHIP 10uH
L604	1-414-398-11	s	INDUCTOR, CHIP 10uH
L605	1-414-398-11	s	INDUCTOR, CHIP 10uH
L701	1-414-398-11	s	INDUCTOR, CHIP 10uH
L702	1-414-398-11	s	INDUCTOR, CHIP 10uH
L703	1-414-398-11	s	INDUCTOR, CHIP 10uH
L704	1-412-282-41	s	INDUCTOR, CHIP 470uH
L705	1-412-282-41	s	INDUCTOR, CHIP 470uH
PS11	⚠ 1-533-282-21	s	LINK, IC, CHIP 2A
PS13	⚠ 1-576-124-11	s	LINK, IC, CHIP 1A
PS14	⚠ 1-576-124-11	s	LINK, IC, CHIP 1A
PS15	⚠ 1-576-124-11	s	LINK, IC, CHIP 1A
Q201	8-729-900-53	s	TRANSISTOR DTC114EK
Q202	8-729-216-22	s	TRANSISTOR 2SA1162
Q206	8-729-907-46	s	TRANSISTOR IMZ1
Q207	8-729-907-46	s	TRANSISTOR IMZ1
Q208	8-729-140-47	s	TRANSISTOR 2SC3735-B34
Q301	8-729-905-35	s	TRANSISTOR 2SC4081-R
Q302	8-729-905-35	s	TRANSISTOR 2SC4081-R
Q303	8-729-905-23	s	TRANSISTOR 2SA1576-R
Q304	8-729-905-35	s	TRANSISTOR 2SC4081-R
Q305	8-729-905-35	s	TRANSISTOR 2SC4081-R
Q306	8-729-905-35	s	TRANSISTOR 2SC4081-R
Q307	8-729-905-35	s	TRANSISTOR 2SC4081-R
Q308	8-729-905-35	s	TRANSISTOR 2SC4081-R
Q401	8-729-905-35	s	TRANSISTOR 2SC4081-R
Q402	8-729-905-35	s	TRANSISTOR 2SC4081-R
Q403	8-729-905-23	s	TRANSISTOR 2SA1576-R
Q404	8-729-905-35	s	TRANSISTOR 2SC4081-R
Q405	8-729-905-35	s	TRANSISTOR 2SC4081-R
Q406	8-729-905-35	s	TRANSISTOR 2SC4081-R
Q407	8-729-905-35	s	TRANSISTOR 2SC4081-R
Q501	8-729-905-35	s	TRANSISTOR 2SC4081-R
Q502	8-729-905-35	s	TRANSISTOR 2SC4081-R
Q503	8-729-905-23	s	TRANSISTOR 2SA1576-R
Q504	8-729-905-35	s	TRANSISTOR 2SC4081-R
Q505	8-729-905-35	s	TRANSISTOR 2SC4081-R
Q506	8-729-905-35	s	TRANSISTOR 2SC4081-R
Q507	8-729-905-35	s	TRANSISTOR 2SC4081-R
Q701	8-729-024-91	s	TRANSISTOR 2SC2712-GL-TE85L
Q702	8-729-900-53	s	TRANSISTOR DTC114EK
Q703	8-729-900-53	s	TRANSISTOR DTC114EK
Q704	8-729-905-35	s	TRANSISTOR 2SC4081-R
Q705	8-729-905-35	s	TRANSISTOR 2SC4081-R
R11	1-216-655-11	s	METAL, CHIP 1.5k 0.5% 1/10W
R12	1-216-650-11	s	METAL, CHIP 910 0.5% 1/10W
R101	1-216-025-91	s	METAL, CHIP 100 5% 1/10W
R102	1-216-025-91	s	METAL, CHIP 100 5% 1/10W

(RP-101 BOARD; Suffix -11, 12)

Ref. No. or Q'ty	Part No.	SP	Description
R103	1-216-121-91	s	METAL, CHIP 1M 5% 1/10W
R104	1-216-295-91	s	RES, CHIP 0
R105	1-216-295-91	s	RES, CHIP 0
R106	1-216-295-91	s	RES, CHIP 0
R109	1-216-089-91	s	METAL, CHIP 47k 5% 1/10W
R110	1-216-089-91	s	METAL, CHIP 47k 5% 1/10W
R111	1-216-057-00	s	METAL, CHIP 2.2k 5% 1/10W
R112	1-216-295-91	s	RES, CHIP 0
R113	1-216-025-91	s	METAL, CHIP 100 5% 1/10W
R114	1-216-035-00	s	METAL, CHIP 270 5% 1/10W
R115	1-216-295-91	s	RES, CHIP 0
R119	1-216-295-91	s	RES, CHIP 0
R131	1-216-295-91	s	RES, CHIP 0
R146	1-216-025-91	s	METAL, CHIP 100 5% 1/10W
R147	1-216-295-91	s	RES, CHIP 0
R148	1-216-295-91	s	RES, CHIP 0
R149	1-216-295-91	s	RES, CHIP 0
R150	1-216-295-91	s	RES, CHIP 0
R151	1-216-295-91	s	RES, CHIP 0
R152	1-216-295-91	s	RES, CHIP 0
R153	1-216-025-91	s	METAL, CHIP 100 5% 1/10W
R154	1-216-295-91	s	RES, CHIP 0
R155	1-216-295-91	s	RES, CHIP 0
R156	1-216-057-00	s	METAL, CHIP 2.2k 5% 1/10W
R201	1-216-295-91	s	RES, CHIP 0
R202	1-216-025-91	s	METAL, CHIP 100 5% 1/10W
R203	1-216-025-91	s	METAL, CHIP 100 5% 1/10W
R205	1-216-837-11	s	METAL, CHIP 22k 5% 1/16W
R206	1-216-837-11	s	METAL, CHIP 22k 5% 1/16W
R207	1-216-837-11	s	METAL, CHIP 22k 5% 1/16W
R208	1-216-837-11	s	METAL, CHIP 22k 5% 1/16W
R209	1-216-837-11	s	METAL, CHIP 22k 5% 1/16W
R210	1-216-837-11	s	METAL, CHIP 22k 5% 1/16W
R211	1-216-837-11	s	METAL, CHIP 22k 5% 1/16W
R212	1-216-837-11	s	METAL, CHIP 22k 5% 1/16W
R213	1-216-837-11	s	METAL, CHIP 22k 5% 1/16W
R214	1-216-837-11	s	METAL, CHIP 22k 5% 1/16W
R215	1-216-837-11	s	METAL, CHIP 22k 5% 1/16W
R216	1-216-837-11	s	METAL, CHIP 22k 5% 1/16W
R217	1-216-837-11	s	METAL, CHIP 22k 5% 1/16W
R220	1-216-295-91	s	RES, CHIP 0
R222	1-216-295-91	s	RES, CHIP 0
R223	1-216-039-00	s	METAL, CHIP 390 5% 1/10W
R224	1-216-039-00	s	METAL, CHIP 390 5% 1/10W
R225	1-216-049-91	s	METAL, CHIP 1k 5% 1/10W
R226	1-216-049-91	s	METAL, CHIP 1k 5% 1/10W
R227	1-216-041-00	s	METAL, CHIP 470 5% 1/10W
R228	1-216-041-00	s	METAL, CHIP 470 5% 1/10W
R229	1-216-039-00	s	METAL, CHIP 390 5% 1/10W
R230	1-216-049-91	s	METAL, CHIP 1k 5% 1/10W
R231	1-216-049-91	s	METAL, CHIP 1k 5% 1/10W
R232	1-216-039-00	s	METAL, CHIP 390 5% 1/10W
R233	1-216-039-00	s	METAL, CHIP 390 5% 1/10W
R234	1-216-039-00	s	METAL, CHIP 390 5% 1/10W
R235	1-216-049-91	s	METAL, CHIP 1k 5% 1/10W
R236	1-216-049-91	s	METAL, CHIP 1k 5% 1/10W
R237	1-216-039-00	s	METAL, CHIP 390 5% 1/10W
R238	1-216-039-00	s	METAL, CHIP 390 5% 1/10W
R239	1-216-049-91	s	METAL, CHIP 1k 5% 1/10W

(RP-101 BOARD; Suffix -11, 12)

Ref. No. or Q'ty	Part No.	SP	Description
R240	1-216-049-91	s	METAL, CHIP 1k 5% 1/10W
R241	1-216-033-00	s	METAL, CHIP 220 5% 1/10W
R242	1-216-073-00	s	METAL, CHIP 10k 5% 1/10W
R243	1-216-073-00	s	METAL, CHIP 10k 5% 1/10W
R244	1-216-049-91	s	METAL, CHIP 1k 5% 1/10W
R245	1-216-073-00	s	METAL, CHIP 10k 5% 1/10W
R246	1-216-073-00	s	METAL, CHIP 10k 5% 1/10W
R247	1-216-295-91	s	RES, CHIP 0
R301	1-216-065-00	s	METAL, CHIP 4.7k 5% 1/10W
R302	1-216-013-00	s	METAL, CHIP 33 5% 1/10W
R303	1-216-069-00	s	METAL, CHIP 6.8k 5% 1/10W
R304	1-216-049-91	s	METAL, CHIP 1k 5% 1/10W
R305	1-216-021-00	s	METAL, CHIP 68 5% 1/10W
R306	1-216-049-91	s	METAL, CHIP 1k 5% 1/10W
R307	1-216-113-00	s	METAL, CHIP 470k 5% 1/10W
R308	1-216-077-00	s	METAL, CHIP 15k 5% 1/10W
R309	1-216-073-00	s	METAL, CHIP 10k 5% 1/10W
R310	1-216-113-00	s	METAL, CHIP 470k 5% 1/10W
R311	1-216-039-00	s	METAL, CHIP 390 5% 1/10W
R312	1-216-039-00	s	METAL, CHIP 390 5% 1/10W
R313	1-216-684-91	s	METAL, CHIP 24k 0.5% 1/10W
R314	1-216-684-91	s	METAL, CHIP 24k 0.5% 1/10W
R315	1-216-075-00	s	METAL, CHIP 12k 5% 1/10W
R316	1-216-049-91	s	METAL, CHIP 1k 5% 1/10W
R318	1-216-295-91	s	RES, CHIP 0
R319	1-216-089-91	s	METAL, CHIP 47k 5% 1/10W
R320	1-216-075-00	s	METAL, CHIP 12k 5% 1/10W
R321	1-216-037-00	s	METAL, CHIP 330 5% 1/10W
R322	1-216-037-00	s	METAL, CHIP 330 5% 1/10W
R323	1-216-037-00	s	METAL, CHIP 330 5% 1/10W
R324	1-216-037-00	s	METAL, CHIP 330 5% 1/10W
R325	1-216-037-00	s	METAL, CHIP 330 5% 1/10W
R326	1-216-041-00	s	METAL, CHIP 470 5% 1/10W
R327	1-216-636-11	s	METAL, CHIP 240 0.5% 1/10W
R328	1-216-295-91	s	RES, CHIP 0
R329	1-216-636-11	s	METAL, CHIP 240 0.5% 1/10W
R330	1-216-057-00	s	METAL, CHIP 2.2k 5% 1/10W
R331	1-216-065-00	s	METAL, CHIP 4.7k 5% 1/10W
R332	1-216-025-91	s	METAL, CHIP 100 5% 1/10W
R333	1-216-027-00	s	METAL, CHIP 120 5% 1/10W
R334	1-216-077-00	s	METAL, CHIP 15k 5% 1/10W
R335	1-216-057-00	s	METAL, CHIP 2.2k 5% 1/10W
R336	1-216-065-00	s	METAL, CHIP 4.7k 5% 1/10W
R337	1-216-025-91	s	METAL, CHIP 100 5% 1/10W
R338	1-216-682-11	s	METAL, CHIP 20k 0.5% 1/10W
R339	1-216-027-00	s	METAL, CHIP 120 5% 1/10W
R340	1-216-683-11	s	METAL, CHIP 22k 0.5% 1/10W
R341	1-216-295-91	s	RES, CHIP 0
R342	1-216-073-00	s	METAL, CHIP 10k 5% 1/10W
R343	1-216-073-00	s	METAL, CHIP 10k 5% 1/10W
R344	1-216-073-00	s	METAL, CHIP 10k 5% 1/10W
R345	1-216-041-00	s	METAL, CHIP 470 5% 1/10W
R347	1-216-295-91	s	RES, CHIP 0
R401	1-216-021-00	s	METAL, CHIP 68 5% 1/10W
R402	1-216-065-00	s	METAL, CHIP 4.7k 5% 1/10W
R403	1-216-013-00	s	METAL, CHIP 33 5% 1/10W
R404	1-216-069-00	s	METAL, CHIP 6.8k 5% 1/10W
R405	1-216-049-91	s	METAL, CHIP 1k 5% 1/10W
R406	1-216-049-91	s	METAL, CHIP 1k 5% 1/10W

(RP-101 BOARD; Suffix -11, 12)

Ref. No. or Q'ty	Part No.	SP	Description
R407	1-216-113-00	s	METAL, CHIP 470k 5% 1/10W
R408	1-216-113-00	s	METAL, CHIP 470k 5% 1/10W
R409	1-216-077-00	s	METAL, CHIP 15k 5% 1/10W
R410	1-216-073-00	s	METAL, CHIP 10k 5% 1/10W
R411	1-216-684-91	s	METAL, CHIP 24k 0.5% 1/10W
R412	1-216-039-00	s	METAL, CHIP 390 5% 1/10W
R413	1-216-039-00	s	METAL, CHIP 390 5% 1/10W
R414	1-216-684-91	s	METAL, CHIP 24k 0.5% 1/10W
R415	1-216-075-00	s	METAL, CHIP 12k 5% 1/10W
R416	1-216-049-91	s	METAL, CHIP 1k 5% 1/10W
R418	1-216-295-91	s	RES, CHIP 0
R419	1-216-089-91	s	METAL, CHIP 47k 5% 1/10W
R420	1-216-075-00	s	METAL, CHIP 12k 5% 1/10W
R421	1-216-037-00	s	METAL, CHIP 330 5% 1/10W
R422	1-216-037-00	s	METAL, CHIP 330 5% 1/10W
R423	1-216-037-00	s	METAL, CHIP 330 5% 1/10W
R424	1-216-037-00	s	METAL, CHIP 330 5% 1/10W
R425	1-216-037-00	s	METAL, CHIP 330 5% 1/10W
R426	1-216-041-00	s	METAL, CHIP 470 5% 1/10W
R427	1-216-636-11	s	METAL, CHIP 240 0.5% 1/10W
R428	1-216-295-91	s	RES, CHIP 0
R429	1-216-636-11	s	METAL, CHIP 240 0.5% 1/10W
R430	1-216-057-00	s	METAL, CHIP 2.2k 5% 1/10W
R431	1-216-065-00	s	METAL, CHIP 4.7k 5% 1/10W
R432	1-216-025-91	s	METAL, CHIP 100 5% 1/10W
R433	1-216-027-00	s	METAL, CHIP 120 5% 1/10W
R434	1-216-101-00	s	METAL, CHIP 150k 5% 1/10W
R435	1-216-057-00	s	METAL, CHIP 2.2k 5% 1/10W
R436	1-216-065-00	s	METAL, CHIP 4.7k 5% 1/10W
R437	1-216-025-91	s	METAL, CHIP 100 5% 1/10W
R438	1-216-682-11	s	METAL, CHIP 20k 0.5% 1/10W
R439	1-216-027-00	s	METAL, CHIP 120 5% 1/10W
R440	1-216-683-11	s	METAL, CHIP 22k 0.5% 1/10W
R441	1-216-073-00	s	METAL, CHIP 10k 5% 1/10W
R442	1-216-073-00	s	METAL, CHIP 10k 5% 1/10W
R446	1-216-295-91	s	RES, CHIP 0
R447	1-216-041-00	s	METAL, CHIP 470 5% 1/10W
R449	1-216-037-00	s	METAL, CHIP 330 5% 1/10W
R450	1-216-037-00	s	METAL, CHIP 330 5% 1/10W
R501	1-216-295-91	s	RES, CHIP 0
R502	1-216-065-00	s	METAL, CHIP 4.7k 5% 1/10W
R503	1-216-013-00	s	METAL, CHIP 33 5% 1/10W
R504	1-216-069-00	s	METAL, CHIP 6.8k 5% 1/10W
R505	1-216-049-91	s	METAL, CHIP 1k 5% 1/10W
R506	1-216-021-00	s	METAL, CHIP 68 5% 1/10W
R507	1-216-049-91	s	METAL, CHIP 1k 5% 1/10W
R508	1-216-113-00	s	METAL, CHIP 470k 5% 1/10W
R509	1-216-077-00	s	METAL, CHIP 15k 5% 1/10W
R510	1-216-073-00	s	METAL, CHIP 10k 5% 1/10W
R511	1-216-113-00	s	METAL, CHIP 470k 5% 1/10W
R512	1-216-039-00	s	METAL, CHIP 390 5% 1/10W
R513	1-216-039-00	s	METAL, CHIP 390 5% 1/10W
R514	1-216-684-91	s	METAL, CHIP 24k 0.5% 1/10W
R515	1-216-684-91	s	METAL, CHIP 24k 0.5% 1/10W
R516	1-216-075-00	s	METAL, CHIP 12k 5% 1/10W
R517	1-216-042-00	s	METAL, CHIP 510 5% 1/10W
R519	1-216-295-91	s	RES, CHIP 0
R520	1-216-089-91	s	METAL, CHIP 47k 5% 1/10W
R521	1-216-075-00	s	METAL, CHIP 12k 5% 1/10W

(RP-101 BOARD; Suffix -11, 12)

Ref. No. or Q'ty	Part No.	SP	Description
R522	1-216-037-00	s	METAL, CHIP 330 5% 1/10W
R523	1-216-037-00	s	METAL, CHIP 330 5% 1/10W
R524	1-216-037-00	s	METAL, CHIP 330 5% 1/10W
R525	1-216-037-00	s	METAL, CHIP 330 5% 1/10W
R526	1-216-037-00	s	METAL, CHIP 330 5% 1/10W
R527	1-216-041-00	s	METAL, CHIP 470 5% 1/10W
R528	1-216-636-11	s	METAL, CHIP 240 0.5% 1/10W
R529	1-216-295-91	s	RES, CHIP 0
R530	1-216-636-11	s	METAL, CHIP 240 0.5% 1/10W
R531	1-216-057-00	s	METAL, CHIP 2.2k 5% 1/10W
R532	1-216-065-00	s	METAL, CHIP 4.7k 5% 1/10W
R533	1-216-025-91	s	METAL, CHIP 100 5% 1/10W
R534	1-216-027-00	s	METAL, CHIP 120 5% 1/10W
R535	1-216-101-00	s	METAL, CHIP 150k 5% 1/10W
R536	1-216-057-00	s	METAL, CHIP 2.2k 5% 1/10W
R537	1-216-295-91	s	RES, CHIP 0
R538	1-216-065-00	s	METAL, CHIP 4.7k 5% 1/10W
R539	1-216-025-91	s	METAL, CHIP 100 5% 1/10W
R540	1-216-682-11	s	METAL, CHIP 20k 0.5% 1/10W
R541	1-216-027-00	s	METAL, CHIP 120 5% 1/10W
R542	1-216-081-00	s	METAL, CHIP 22k 5% 1/10W
R543	1-216-073-00	s	METAL, CHIP 10k 5% 1/10W
R544	1-216-073-00	s	METAL, CHIP 10k 5% 1/10W
R545	1-216-029-00	s	METAL, CHIP 150 5% 1/10W
R548	1-216-295-91	s	RES, CHIP 0
R549	1-216-041-00	s	METAL, CHIP 470 5% 1/10W
R551	1-216-037-00	s	METAL, CHIP 330 5% 1/10W
R552	1-216-037-00	s	METAL, CHIP 330 5% 1/10W
R601	1-216-057-00	s	METAL, CHIP 2.2k 5% 1/10W
R602	1-216-035-00	s	METAL, CHIP 270 5% 1/10W
R603	1-216-025-91	s	METAL, CHIP 100 5% 1/10W
R604	1-216-089-91	s	METAL, CHIP 47k 5% 1/10W
R605	1-216-089-91	s	METAL, CHIP 47k 5% 1/10W
R606	1-216-121-91	s	METAL, CHIP 1M 5% 1/10W
R608	1-216-295-91	s	RES, CHIP 0
R609	1-216-295-91	s	RES, CHIP 0
R610	1-216-295-91	s	RES, CHIP 0
R701	1-216-025-91	s	METAL, CHIP 100 5% 1/10W
R702	1-216-025-91	s	METAL, CHIP 100 5% 1/10W
R703	1-216-025-91	s	METAL, CHIP 100 5% 1/10W
R704	1-216-089-91	s	METAL, CHIP 47k 5% 1/10W
R705	1-216-049-91	s	METAL, CHIP 1k 5% 1/10W
R706	1-216-295-91	s	RES, CHIP 0
R707	1-216-627-11	s	METAL, CHIP 100 0.5% 1/10W
R708	1-216-097-91	s	METAL, CHIP 100k 5% 1/10W
R709	1-216-049-91	s	METAL, CHIP 1k 5% 1/10W
R710	1-216-049-91	s	METAL, CHIP 1k 5% 1/10W
R711	1-216-097-91	s	METAL, CHIP 100k 5% 1/10W
R712	1-216-049-91	s	METAL, CHIP 1k 5% 1/10W
R713	1-216-049-91	s	METAL, CHIP 1k 5% 1/10W
R714	1-216-057-00	s	METAL, CHIP 2.2k 5% 1/10W
R715	1-216-057-00	s	METAL, CHIP 2.2k 5% 1/10W
R718	1-216-057-00	s	METAL, CHIP 2.2k 5% 1/10W
R719	1-216-057-00	s	METAL, CHIP 2.2k 5% 1/10W
R720	1-216-071-00	s	METAL, CHIP 8.2k 5% 1/10W
R721	1-216-075-00	s	METAL, CHIP 12k 5% 1/10W
R722	1-216-071-00	s	METAL, CHIP 8.2k 5% 1/10W
R723	1-216-075-00	s	METAL, CHIP 12k 5% 1/10W
R724	1-216-073-00	s	METAL, CHIP 10k 5% 1/10W

(RP-101 BOARD; Suffix -11, 12)

Ref. No. or Q'ty	Part No.	SP	Description
R725	1-216-073-00	s	METAL, CHIP 10k 5% 1/10W
R726	1-216-073-00	s	METAL, CHIP 10k 5% 1/10W
R727	1-216-073-00	s	METAL, CHIP 10k 5% 1/10W
R728	1-216-085-00	s	METAL, CHIP 33k 5% 1/10W
R729	1-216-085-00	s	METAL, CHIP 33k 5% 1/10W
R730	1-216-073-00	s	METAL, CHIP 10k 5% 1/10W
R731	1-216-081-00	s	METAL, CHIP 22k 5% 1/10W
R732	1-216-081-00	s	METAL, CHIP 22k 5% 1/10W
R733	1-216-073-00	s	METAL, CHIP 10k 5% 1/10W
R734	1-216-081-00	s	METAL, CHIP 22k 5% 1/10W
R735	1-216-081-00	s	METAL, CHIP 22k 5% 1/10W
R736	1-216-085-00	s	METAL, CHIP 33k 5% 1/10W
R737	1-216-085-00	s	METAL, CHIP 33k 5% 1/10W
R738	1-216-075-00	s	METAL, CHIP 12k 5% 1/10W
R739	1-216-075-00	s	METAL, CHIP 12k 5% 1/10W
R740	1-216-037-00	s	METAL, CHIP 330 5% 1/10W
R741	1-216-073-00	s	METAL, CHIP 10k 5% 1/10W
R742	1-216-073-00	s	METAL, CHIP 10k 5% 1/10W
R743	1-216-037-00	s	METAL, CHIP 330 5% 1/10W
R744	1-216-073-00	s	METAL, CHIP 10k 5% 1/10W
R745	1-216-073-00	s	METAL, CHIP 10k 5% 1/10W
R746	1-216-073-00	s	METAL, CHIP 10k 5% 1/10W
R747	1-216-073-00	s	METAL, CHIP 10k 5% 1/10W
R748	1-216-049-91	s	METAL, CHIP 1k 5% 1/10W
R749	1-216-049-91	s	METAL, CHIP 1k 5% 1/10W
R790	1-216-295-91	s	RES, CHIP 0
RB101	1-239-412-11	s	RESISTOR BLOCK, CHIP 100 x 4
RB102	1-239-412-11	s	RESISTOR BLOCK, CHIP 100 x 4
RB103	1-236-908-11	s	RESISTOR BLOCK, CHIP 10k x 4
RB104	1-239-412-11	s	RESISTOR BLOCK, CHIP 100 x 4
RB105	1-239-412-11	s	RESISTOR BLOCK, CHIP 100 x 4
RB201	1-239-412-11	s	RESISTOR BLOCK, CHIP 100 x 4
RB202	1-239-412-11	s	RESISTOR BLOCK, CHIP 100 x 4
RB203	1-239-412-11	s	RESISTOR BLOCK, CHIP 100 x 4
RB601	1-239-412-11	s	RESISTOR BLOCK, CHIP 100 x 4
RB602	1-239-412-11	s	RESISTOR BLOCK, CHIP 100 x 4
RB603	1-239-412-11	s	RESISTOR BLOCK, CHIP 100 x 4
RB604	1-239-412-11	s	RESISTOR BLOCK, CHIP 100 x 4
RB605	1-239-412-11	s	RESISTOR BLOCK, CHIP 100 x 4
RB606	1-239-412-11	s	RESISTOR BLOCK, CHIP 100 x 4
RB607	1-239-412-11	s	RESISTOR BLOCK, CHIP 100 x 4
RB701	1-239-412-11	s	RESISTOR BLOCK, CHIP 100 x 4
RB702	1-239-412-11	s	RESISTOR BLOCK, CHIP 100 x 4

SDI-26 BOARD

Ref. No. or Q'ty | Part No. | SP Description

The parts marked * are different, depending on the product serial numbers, as shown below:

*1) Serial number; 10001 through 10430 (For DSR-80 J)
Serial number; 10001 through 10470 (For DSR-80 UC)
Serial number; 10001 through 10320 (For DSR-80P CE)

*2) Serial number; 10431 and higher (For DSR-80 J)
Serial number; 10471 and higher (For DSR-80 UC)
Serial number; 10321 and higher (For DSR-80P CE)
Serial number; 10001 and higher (For DSR-80P UC)

Ref. No. or Q'ty	Part No.	SP	Description	
1pc	A-8315-281-A	s	MOUNTED CIRCUIT BOARD, SDI-26	
1pc	7-621-759-45	s	+PSW, 2.6x6	
1pc	3-179-084-01	s	LEVER (R), PRINTED CIRCUIT BOARD	
1pc	3-179-085-01	s	LEVER (L), PRINTED CIRCUIT BOARD	
2pcs	3-189-543-03	o	IC HEAT SINk (A)	
2pcs	3-189-544-04	o	IC HEAT SINk (B)	
2pcs	7-621-770-87	s	SCREW +B 2.6x5	
C100	1-163-038-91	s	CERAMIC, CHIP 0.1uF 25V	
C101	1-163-038-91	s	CERAMIC, CHIP 0.1uF 25V	
C102	1-163-038-91	s	CERAMIC, CHIP 0.1uF 25V	
C103	1-126-925-11	s	ELECT 470uF 20% 10V	
C104	1-126-925-11	s	ELECT 470uF 20% 10V	
C105	1-126-925-11	s	ELECT 470uF 20% 10V	
C106	1-163-227-11	s	CERAMIC, CHIP 10pF 5% 50V	
C107	1-163-038-91	s	CERAMIC, CHIP 0.1uF 25V	
C108	1-163-038-91	s	CERAMIC, CHIP 0.1uF 25V	
C109	1-163-038-91	s	CERAMIC, CHIP 0.1uF 25V	
C110	1-126-925-11	s	ELECT 470uF 20% 10V	
C111	1-163-021-91	s	CERAMIC, CHIP 0.01uF 10% 50V	
C112	1-163-021-91	s	CERAMIC, CHIP 0.01uF 10% 50V	
C113	1-163-243-11	s	CERAMIC, CHIP 47pF 5% 50V	
C114	1-163-038-91	s	CERAMIC, CHIP 0.1uF 25V	
C115	1-126-394-11	s	ELECT, CHIP 10uF 20% 16V	*1)
	1-126-157-11	s	ELECT 10uF 20% 16V	*2)
C116	1-126-394-11	s	ELECT, CHIP 10uF 20% 16V	*1)
	1-126-157-11	s	ELECT 10uF 20% 16V	*2)
C117	1-163-038-91	s	CERAMIC, CHIP 0.1uF 25V	
C118	1-163-021-91	s	CERAMIC, CHIP 0.01uF 10% 50V	
C119	1-163-038-91	s	CERAMIC, CHIP 0.1uF 25V	
C120	1-163-038-91	s	CERAMIC, CHIP 0.1uF 25V	
C121	1-163-038-91	s	CERAMIC, CHIP 0.1uF 25V	
C122	1-163-038-91	s	CERAMIC, CHIP 0.1uF 25V	
C123	1-163-038-91	s	CERAMIC, CHIP 0.1uF 25V	
C124	1-163-038-91	s	CERAMIC, CHIP 0.1uF 25V	
C125	1-163-038-91	s	CERAMIC, CHIP 0.1uF 25V	
C126	1-126-934-11	s	ELECT 220uF 20% 16V	
C127	1-163-038-91	s	CERAMIC, CHIP 0.1uF 25V	
C128	1-163-038-91	s	CERAMIC, CHIP 0.1uF 25V	
C129	1-163-038-91	s	CERAMIC, CHIP 0.1uF 25V	
C130	1-163-038-91	s	CERAMIC, CHIP 0.1uF 25V	
C131	1-163-038-91	s	CERAMIC, CHIP 0.1uF 25V	
C132	1-126-934-11	s	ELECT 220uF 20% 16V	
C133	1-163-038-91	s	CERAMIC, CHIP 0.1uF 25V	
C134	1-163-038-91	s	CERAMIC, CHIP 0.1uF 25V	
C135	1-163-038-91	s	CERAMIC, CHIP 0.1uF 25V	
C136	1-163-038-91	s	CERAMIC, CHIP 0.1uF 25V	

(SDI-26 BOARD)

Ref. No. or Q'ty	Part No.	SP	Description	
C137	1-163-038-91	s	CERAMIC, CHIP 0.1uF 25V	
C138	1-163-038-91	s	CERAMIC, CHIP 0.1uF 25V	
C139	1-163-038-91	s	CERAMIC, CHIP 0.1uF 25V	
C208	1-163-038-91	s	CERAMIC, CHIP 0.1uF 25V	
C209	1-163-038-91	s	CERAMIC, CHIP 0.1uF 25V	
C210	1-163-038-91	s	CERAMIC, CHIP 0.1uF 25V	
C211	1-163-038-91	s	CERAMIC, CHIP 0.1uF 25V	
C212	1-163-038-91	s	CERAMIC, CHIP 0.1uF 25V	
C213	1-163-038-91	s	CERAMIC, CHIP 0.1uF 25V	
C214	1-163-038-91	s	CERAMIC, CHIP 0.1uF 25V	
C217	1-126-394-11	s	ELECT, CHIP 10uF 20% 16V	*1)
	1-126-157-11	s	ELECT 10uF 20% 16V	*2)
C218	1-126-394-11	s	ELECT, CHIP 10uF 20% 16V	*1)
	1-126-157-11	s	ELECT 10uF 20% 16V	*2)
C221	1-163-038-91	s	CERAMIC, CHIP 0.1uF 25V	
C222	1-163-038-91	s	CERAMIC, CHIP 0.1uF 25V	
C225	1-163-038-91	s	CERAMIC, CHIP 0.1uF 25V	
C226	1-163-038-91	s	CERAMIC, CHIP 0.1uF 25V	
C229	1-163-038-91	s	CERAMIC, CHIP 0.1uF 25V	
C230	1-163-038-91	s	CERAMIC, CHIP 0.1uF 25V	
C233	1-163-038-91	s	CERAMIC, CHIP 0.1uF 25V	
C234	1-163-038-91	s	CERAMIC, CHIP 0.1uF 25V	
C235	1-163-038-91	s	CERAMIC, CHIP 0.1uF 25V	
C236	1-163-038-91	s	CERAMIC, CHIP 0.1uF 25V	
C237	1-163-038-91	s	CERAMIC, CHIP 0.1uF 25V	
C238	1-163-038-91	s	CERAMIC, CHIP 0.1uF 25V	
C239	1-163-038-91	s	CERAMIC, CHIP 0.1uF 25V	
C240	1-163-038-91	s	CERAMIC, CHIP 0.1uF 25V	
C241	1-163-038-91	s	CERAMIC, CHIP 0.1uF 25V	
C242	1-163-038-91	s	CERAMIC, CHIP 0.1uF 25V	
C243	1-163-038-91	s	CERAMIC, CHIP 0.1uF 25V	
C244	1-163-038-91	s	CERAMIC, CHIP 0.1uF 25V	
C247	1-163-259-91	s	CERAMIC, CHIP 220pF 5% 50V	
C300	1-163-133-00	s	CERAMIC, CHIP 470pF 5% 50V	
C301	1-126-394-11	s	ELECT, CHIP 10uF 20% 16V	*1)
	1-126-157-11	s	ELECT 10uF 20% 16V	*2)
C302	1-163-038-91	s	CERAMIC, CHIP 0.1uF 25V	
C303	1-163-038-91	s	CERAMIC, CHIP 0.1uF 25V	
C304	1-163-038-91	s	CERAMIC, CHIP 0.1uF 25V	
C305	1-163-038-91	s	CERAMIC, CHIP 0.1uF 25V	
C306	1-163-038-91	s	CERAMIC, CHIP 0.1uF 25V	
C307	1-163-038-91	s	CERAMIC, CHIP 0.1uF 25V	
C308	1-163-038-91	s	CERAMIC, CHIP 0.1uF 25V	
C309	1-163-038-91	s	CERAMIC, CHIP 0.1uF 25V	
C310	1-163-038-91	s	CERAMIC, CHIP 0.1uF 25V	
C406	1-163-038-91	s	CERAMIC, CHIP 0.1uF 25V	
C408	1-163-038-91	s	CERAMIC, CHIP 0.1uF 25V	
C409	1-163-038-91	s	CERAMIC, CHIP 0.1uF 25V	
C410	1-163-038-91	s	CERAMIC, CHIP 0.1uF 25V	
C411	1-163-038-91	s	CERAMIC, CHIP 0.1uF 25V	
C412	1-163-038-91	s	CERAMIC, CHIP 0.1uF 25V	
C413	1-163-038-91	s	CERAMIC, CHIP 0.1uF 25V	
C416	1-126-394-11	s	ELECT, CHIP 10uF 20% 16V	*1)
	1-126-157-11	s	ELECT 10uF 20% 16V	*2)

(SDI-26 BOARD)

Ref. No. or Q'ty	Part No.	SP	Description	
C417	1-126-394-11	s	ELECT, CHIP 10uF 20% 16V	*1)
	1-126-157-11	s	ELECT 10uF 20% 16V	*2)
C420	1-163-038-91	s	CERAMIC, CHIP 0.1uF 25V	
C421	1-163-038-91	s	CERAMIC, CHIP 0.1uF 25V	
C424	1-163-038-91	s	CERAMIC, CHIP 0.1uF 25V	
C425	1-163-038-91	s	CERAMIC, CHIP 0.1uF 25V	
C428	1-163-038-91	s	CERAMIC, CHIP 0.1uF 25V	
C429	1-163-038-91	s	CERAMIC, CHIP 0.1uF 25V	
C433	1-163-038-91	s	CERAMIC, CHIP 0.1uF 25V	
C434	1-163-038-91	s	CERAMIC, CHIP 0.1uF 25V	
C436	1-163-038-91	s	CERAMIC, CHIP 0.1uF 25V	
C437	1-163-038-91	s	CERAMIC, CHIP 0.1uF 25V	
C438	1-163-038-91	s	CERAMIC, CHIP 0.1uF 25V	
C439	1-163-038-91	s	CERAMIC, CHIP 0.1uF 25V	
C440	1-163-038-91	s	CERAMIC, CHIP 0.1uF 25V	
C441	1-163-038-91	s	CERAMIC, CHIP 0.1uF 25V	
C442	1-163-038-91	s	CERAMIC, CHIP 0.1uF 25V	
C443	1-163-038-91	s	CERAMIC, CHIP 0.1uF 25V	
C444	1-163-038-91	s	CERAMIC, CHIP 0.1uF 25V	
C500	1-163-038-91	s	CERAMIC, CHIP 0.1uF 25V	
C501	1-163-038-91	s	CERAMIC, CHIP 0.1uF 25V	
C502	1-163-038-91	s	CERAMIC, CHIP 0.1uF 25V	
C503	1-163-038-91	s	CERAMIC, CHIP 0.1uF 25V	
C504	1-126-934-11	s	ELECT 220uF 20% 16V	
C505	1-163-038-91	s	CERAMIC, CHIP 0.1uF 25V	
C507	1-163-038-91	s	CERAMIC, CHIP 0.1uF 25V	
C508	1-163-038-91	s	CERAMIC, CHIP 0.1uF 25V	
C509	1-163-038-91	s	CERAMIC, CHIP 0.1uF 25V	
C510	1-163-121-00	s	CERAMIC, CHIP 150pF 5% 50V	
C511	1-126-934-11	s	ELECT 220uF 20% 16V	
C512	1-126-394-11	s	ELECT, CHIP 10uF 20% 16V	*1)
	1-126-157-11	s	ELECT 10uF 20% 16V	*2)
C513	1-163-038-91	s	CERAMIC, CHIP 0.1uF 25V	
C514	1-163-038-91	s	CERAMIC, CHIP 0.1uF 25V	
C515	1-163-038-91	s	CERAMIC, CHIP 0.1uF 25V	
C516	1-163-038-91	s	CERAMIC, CHIP 0.1uF 25V	
C517	1-163-038-91	s	CERAMIC, CHIP 0.1uF 25V	
C518	1-163-038-91	s	CERAMIC, CHIP 0.1uF 25V	
C519	1-126-934-11	s	ELECT 220uF 20% 16V	
C520	1-126-934-11	s	ELECT 220uF 20% 16V	
C521	1-163-038-91	s	CERAMIC, CHIP 0.1uF 25V	
C522	1-163-038-91	s	CERAMIC, CHIP 0.1uF 25V	
C601	1-104-664-11	s	ELECT 47uF 20% 25V	
C602	1-104-664-11	s	ELECT 47uF 20% 25V	
C603	1-163-038-91	s	CERAMIC, CHIP 0.1uF 25V	
C604	1-163-038-91	s	CERAMIC, CHIP 0.1uF 25V	
C605	1-163-038-91	s	CERAMIC, CHIP 0.1uF 25V	
C606	1-163-038-91	s	CERAMIC, CHIP 0.1uF 25V	
C607	1-104-664-11	s	ELECT 47uF 20% 25V	
C608	1-104-664-11	s	ELECT 47uF 20% 25V	
C609	1-163-038-91	s	CERAMIC, CHIP 0.1uF 25V	
C610	1-163-038-91	s	CERAMIC, CHIP 0.1uF 25V	
C611	1-163-038-91	s	CERAMIC, CHIP 0.1uF 25V	
C612	1-163-038-91	s	CERAMIC, CHIP 0.1uF 25V	
C613	1-163-038-91	s	CERAMIC, CHIP 0.1uF 25V	
C614	1-163-038-91	s	CERAMIC, CHIP 0.1uF 25V	
C615	1-163-038-91	s	CERAMIC, CHIP 0.1uF 25V	

(SDI-26 BOARD)

Ref. No. or Q'ty	Part No.	SP	Description
C616	1-163-038-91	s	CERAMIC, CHIP 0.1uF 25V
C617	1-163-038-91	s	CERAMIC, CHIP 0.1uF 25V
C618	1-163-038-91	s	CERAMIC, CHIP 0.1uF 25V
C619	1-164-004-11	s	CERAMIC, CHIP 0.1uF 10% 25V
C620	1-164-004-11	s	CERAMIC, CHIP 0.1uF 10% 25V
C623	1-163-038-91	s	CERAMIC, CHIP 0.1uF 25V
C624	1-163-038-91	s	CERAMIC, CHIP 0.1uF 25V
C625	1-104-664-11	s	ELECT 47uF 20% 25V
C626	1-104-664-11	s	ELECT 47uF 20% 25V
C628	1-163-038-91	s	CERAMIC, CHIP 0.1uF 25V
C631	1-163-038-91	s	CERAMIC, CHIP 0.1uF 25V
C632	1-163-038-91	s	CERAMIC, CHIP 0.1uF 25V
C633	1-163-038-91	s	CERAMIC, CHIP 0.1uF 25V
C635	1-163-038-91	s	CERAMIC, CHIP 0.1uF 25V
C645	1-163-038-91	s	CERAMIC, CHIP 0.1uF 25V
CN100	1-750-880-11	s	CONNECTOR, MINI-COAX, FEMALE
CN500	1-750-880-11	s	CONNECTOR, MINI-COAX, FEMALE
D100	8-719-404-35	s	DIODE MA141WK
D101	8-719-987-43	s	LED CL-150PG-CD, GRN
D102	8-719-404-35	s	DIODE MA141WK
D103	8-719-989-22	s	LED CL-150R-CD, RED
D500	8-719-404-35	s	DIODE MA141WK
D501	8-719-989-22	s	LED CL-150R-CD, RED
D502	8-719-404-35	s	DIODE MA141WK
D601	8-719-404-35	s	DIODE MA141WK
D602	8-719-024-81	s	DIODE 1SS300-TE85L
D603	8-719-404-35	s	DIODE MA141WK
D604	8-719-024-81	s	DIODE 1SS300-TE85L
D605	8-719-404-35	s	DIODE MA141WK
D606	8-719-404-35	s	DIODE MA141WK
D607	8-719-024-81	s	DIODE 1SS300-TE85L
D608	8-719-024-81	s	DIODE 1SS300-TE85L
E100	1-535-881-21	o	TERMINAL, TP
E200	1-535-881-21	o	TERMINAL, TP
E300	1-535-881-21	o	TERMINAL, TP
E400	1-535-881-21	o	TERMINAL, TP
E500	1-535-881-21	o	TERMINAL, TP
E601	1-535-881-21	o	TERMINAL, TP
FB100	1-543-813-21	s	CHOKE, NOISE, CHIP
FB101	1-543-813-21	s	CHOKE, NOISE, CHIP
FB102	1-543-813-21	s	CHOKE, NOISE, CHIP
FB500	1-543-813-21	s	CHOKE, NOISE, CHIP
FB501	1-543-813-21	s	CHOKE, NOISE, CHIP
FB502	1-543-813-21	s	CHOKE, NOISE, CHIP
FB503	1-543-813-21	s	CHOKE, NOISE, CHIP
FL200	1-233-674-21	s	FILTER BLOCK, NOISE, CHIP
FL201	1-233-674-21	s	FILTER BLOCK, NOISE, CHIP
FL202	1-233-674-21	s	FILTER BLOCK, NOISE, CHIP
FL203	1-233-314-11	s	FILTER, NOISE, CHIP
IC100	8-741-602-21	s	IC SBX1602A
IC101	8-759-209-57	s	IC TC4S69F
IC102	8-759-436-92	s	IC MC10125P
IC103	8-759-436-92	s	IC MC10125P
IC104	8-759-436-92	s	IC MC10125P
IC106	8-759-186-51	s	IC TC74VHC157FS(EL)
IC107	8-759-510-71	s	IC UPC358G2-E2
IC110	8-759-324-03	s	IC HA17431UA-TL

(SDI-26 BOARD)

Ref. No. or Q'ty	Part No.	SP	Description	
IC201	8-759-328-28	s	IC ZA4024	
IC202	8-759-328-28	s	IC ZA4024	
IC207	8-759-186-63	s	IC TC74VHC245F(EL)	
IC208	8-759-393-38	s	IC SN74LVC245ANS-E20	
IC209	8-759-186-38	s	IC TC74VHC32F(EL)	
IC211	8-759-392-77	s	IC SN74LVC245APW-E20	*1)
	8-759-393-38	s	IC SN74LVC245ANS-E20	*2)
IC212	8-759-392-77	s	IC SN74LVC245APW-E20	*1)
	8-759-393-38	s	IC SN74LVC245ANS-E20	*2)
IC251	8-759-186-44	s	IC TC74VHC125F	
IC300	8-759-483-67	s	IC UPD78011FCW-026	
IC301	8-759-927-12	s	IC SN74HCT244ANS	
IC302	8-759-186-49	s	IC TC74VHC139F(EL)	
IC303	8-759-926-80	s	IC SN74HC573NS	
IC304	8-759-233-75	s	IC TC74HCT245AF	
IC305	8-759-926-49	s	IC SN74HC245ANS	
IC306	8-759-926-77	s	IC SN74HC541ANS	
IC307	8-759-081-42	s	IC TC74VHC00F	
IC308	8-759-393-38	s	IC SN74LVC245ANS-E20	
IC401	8-759-328-28	s	IC ZA4024	
IC402	8-759-328-28	s	IC ZA4024	
IC407	8-759-186-63	s	IC TC74VHC245F(EL)	
IC408	8-759-186-63	s	IC TC74VHC245F(EL)	
IC409	8-759-079-87	s	IC TC74VHC245FS(EL)	*1)
	8-759-186-63	s	IC TC74VHC245F(EL)	*2)
IC410	8-759-079-87	s	IC TC74VHC245FS(EL)	*1)
	8-759-186-63	s	IC TC74VHC245F(EL)	*2)
IC500	8-741-601-11	s	IC SBX1601A	
IC502	8-759-324-03	s	IC HA17431UA-TL	
IC503	8-759-510-71	s	IC UPC358G2-E2	
IC601	8-759-479-32	s	IC SN75C1168NS-E05	
IC602	8-759-926-12	s	IC SN74HC139ANS	
IC603	8-759-062-88	s	IC CXD8277Q	
IC604	8-759-062-88	s	IC CXD8277Q	
IC606	8-759-180-84	s	IC TC7W74F	
IC607	8-759-069-38	s	IC CXD8278AQ	
IC608	8-759-069-38	s	IC CXD8278AQ	
IC609	8-759-295-09	s	IC TLC2932IPW-E20	
IC610	8-759-295-09	s	IC TLC2932IPW-E20	
IC611	8-759-186-77	s	IC TC74VHC541F	
IC612	8-759-186-77	s	IC TC74VHC541F	
IC615	8-759-269-09	s	IC SN74HCT04ANS	*1)
IC630	8-759-186-02	s	IC TC74VHCT245F(EL)	*2)
L100	1-412-527-11	s	INDUCTOR 15uH	
L101	1-412-533-21	s	INDUCTOR 47uH	
L102	1-412-533-21	s	INDUCTOR 47uH	
L103	1-410-470-11	s	INDUCTOR 10uH	
L200	1-410-470-11	s	INDUCTOR 10uH	
L201	1-410-470-11	s	INDUCTOR 10uH	
L400	1-410-470-11	s	INDUCTOR 10uH	
L401	1-410-470-11	s	INDUCTOR 10uH	
L500	1-414-102-11	s	INDUCTOR 0.22uH	
L601	1-410-470-11	s	INDUCTOR 10uH	

(SDI-26 BOARD)

Ref. No. or Q'ty	Part No.	SP	Description	
L602	1-410-470-11	s	INDUCTOR 10uH	
L603	1-410-470-11	s	INDUCTOR 10uH	
L604	1-410-470-11	s	INDUCTOR 10uH	
L605	1-410-470-11	s	INDUCTOR 10uH	
L606	1-410-470-11	s	INDUCTOR 10uH	
L607	1-410-470-11	s	INDUCTOR 10uH	
L608	1-410-470-11	s	INDUCTOR 10uH	
PS100	⚠ 1-532-686-21	s	LINK, IC 2.7A	
PS101	⚠ 1-532-984-11	s	LINK, IC 2A	
PS102	⚠ 1-532-984-11	s	LINK, IC 2A	
Q100	8-729-105-68	s	TRANSISTOR 2SC3356-K	
Q101	8-729-105-68	s	TRANSISTOR 2SC3356-K	
Q102	8-729-029-14	s	TRANSISTOR DTC144EUA-T106	
Q500	8-729-105-68	s	TRANSISTOR 2SC3356-K	
Q501	8-729-105-68	s	TRANSISTOR 2SC3356-K	
Q502	8-729-105-68	s	TRANSISTOR 2SC3356-K	
Q503	8-729-105-68	s	TRANSISTOR 2SC3356-K	
Q504	8-729-028-91	s	TRANSISTOR DTA144EUA-T106	
Q506	8-729-028-91	s	TRANSISTOR DTA144EUA-T106	
R100	1-216-623-11	s	METAL, CHIP 68 0.5% 1/10W	
R101	1-216-635-11	s	METAL, CHIP 220 0.5% 1/10W	
R102	1-216-611-11	s	METAL, CHIP 22 0.5% 1/10W	
R103	1-216-624-11	s	METAL, CHIP 75 0.5% 1/10W	
R104	1-216-631-11	s	METAL, CHIP 150 0.5% 1/10W	
R105	1-216-075-00	s	METAL, CHIP 12k 5% 1/10W	
R106	1-216-295-91	s	RES, CHIP 0	
R107	1-216-081-00	s	METAL, CHIP 22k 5% 1/10W	
R108	1-216-075-00	s	METAL, CHIP 12k 5% 1/10W	
R109	1-216-022-00	s	METAL, CHIP 75 5% 1/10W	
R110	1-216-049-91	s	METAL, CHIP 1k 5% 1/10W	
R111	1-216-049-91	s	METAL, CHIP 1k 5% 1/10W	
R112	1-216-049-91	s	METAL, CHIP 1k 5% 1/10W	
R113	1-216-049-91	s	METAL, CHIP 1k 5% 1/10W	
R114	1-216-049-91	s	METAL, CHIP 1k 5% 1/10W	
R115	1-216-049-91	s	METAL, CHIP 1k 5% 1/10W	
R116	1-216-049-91	s	METAL, CHIP 1k 5% 1/10W	
R117	1-216-049-91	s	METAL, CHIP 1k 5% 1/10W	
R118	1-216-049-91	s	METAL, CHIP 1k 5% 1/10W	
R119	1-216-049-91	s	METAL, CHIP 1k 5% 1/10W	
R120	1-216-057-00	s	METAL, CHIP 2.2k 5% 1/10W	
R121	1-216-049-91	s	METAL, CHIP 1k 5% 1/10W	
R122	1-216-059-00	s	METAL, CHIP 2.7k 5% 1/10W	
R123	1-216-049-91	s	METAL, CHIP 1k 5% 1/10W	
R124	1-216-033-00	s	METAL, CHIP 220 5% 1/10W	
R125	1-216-033-00	s	METAL, CHIP 220 5% 1/10W	
R126	1-216-033-00	s	METAL, CHIP 220 5% 1/10W	
R127	1-216-033-00	s	METAL, CHIP 220 5% 1/10W	
R128	1-216-033-00	s	METAL, CHIP 220 5% 1/10W	
R129	1-216-033-00	s	METAL, CHIP 220 5% 1/10W	
R130	1-216-033-00	s	METAL, CHIP 220 5% 1/10W	
R131	1-216-033-00	s	METAL, CHIP 220 5% 1/10W	
R132	1-216-033-00	s	METAL, CHIP 220 5% 1/10W	
R133	1-216-033-00	s	METAL, CHIP 220 5% 1/10W	
R134	1-216-033-00	s	METAL, CHIP 220 5% 1/10W	
R135	1-216-033-00	s	METAL, CHIP 220 5% 1/10W	
R136	1-216-071-00	s	METAL, CHIP 8.2k 5% 1/10W	
R137	1-216-295-91	s	RES, CHIP 0	*1)
R138	1-216-025-91	s	METAL, CHIP 100 5% 1/10W	

(SDI-26 BOARD)

Ref. No. or Q'ty	Part No.	SP	Description	
R139	1-216-025-91	s	METAL, CHIP 100 5% 1/10W	
R140	1-216-033-00	s	METAL, CHIP 220 5% 1/10W	
R141	1-216-295-91	s	RES, CHIP 0	
R142	1-216-295-91	s	RES, CHIP 0	
R143	1-216-295-91	s	RES, CHIP 0	
R146	1-216-651-11	s	METAL, CHIP 1k 0.5% 1/10W	
R147	1-216-653-11	s	METAL, CHIP 1.2k 0.5% 1/10W	
R149	1-216-675-11	s	METAL, CHIP 10k 0.5% 1/10W	
R151	1-216-295-91	s	RES, CHIP 0 5% 1/10W	
R152	1-216-687-11	s	METAL, CHIP 33k 0.5% 1/10W	
R154	1-216-663-11	s	METAL, CHIP 3.3k 0.5% 1/10W	
R155	1-216-643-11	s	METAL, CHIP 470 0.5% 1/10W	
R156	1-216-627-11	s	METAL, CHIP 100 0.5% 1/10W	
R157	1-216-651-11	s	METAL, CHIP 1k 0.5% 1/10W	
R158	1-216-025-91	s	METAL, CHIP 100 5% 1/10W	
R159	1-216-025-91	s	METAL, CHIP 100 5% 1/10W	
R160	1-216-025-91	s	METAL, CHIP 100 5% 1/10W	
R161	1-216-017-91	s	METAL, CHIP 47 5% 1/10W	
R162	1-216-025-91	s	METAL, CHIP 100 5% 1/10W	
R163	1-216-025-91	s	METAL, CHIP 100 5% 1/10W	
R164	1-216-025-91	s	METAL, CHIP 100 5% 1/10W	
R165	1-216-025-91	s	METAL, CHIP 100 5% 1/10W	
R166	1-216-025-91	s	METAL, CHIP 100 5% 1/10W	
R167	1-216-025-91	s	METAL, CHIP 100 5% 1/10W	
R168	1-216-025-91	s	METAL, CHIP 100 5% 1/10W	
R169	1-216-025-91	s	METAL, CHIP 100 5% 1/10W	
R170	1-216-017-91	s	METAL, CHIP 47 5% 1/10W	
R206	1-216-089-91	s	METAL, CHIP 47k 5% 1/10W	
R207	1-216-089-91	s	METAL, CHIP 47k 5% 1/10W	
R208	1-216-089-91	s	METAL, CHIP 47k 5% 1/10W	
R209	1-216-295-91	s	RES, CHIP 0	*1)
R210	1-216-073-00	s	METAL, CHIP 10k 5% 1/10W	
R211	1-216-295-91	s	RES, CHIP 0	*1)
R212	1-216-073-00	s	METAL, CHIP 10k 5% 1/10W	
R213	1-216-073-00	s	METAL, CHIP 10k 5% 1/10W	
R214	1-216-073-00	s	METAL, CHIP 10k 5% 1/10W	
R215	1-216-073-00	s	METAL, CHIP 10k 5% 1/10W	
R217	1-216-295-91	s	RES, CHIP 0	*1)
R219	1-216-295-91	s	RES, CHIP 0	*1)
R220	1-216-295-91	s	RES, CHIP 0	*1)
R221	1-216-025-91	s	METAL, CHIP 100 5% 1/10W	
R223	1-216-097-91	s	METAL, CHIP 100k 5% 1/10W	
R224	1-216-295-91	s	RES, CHIP 0	*1)
R227	1-216-295-91	s	RES, CHIP 0	*1)
R228	1-216-073-00	s	METAL, CHIP 10k 5% 1/10W	
R229	1-216-009-00	s	METAL, CHIP 22 5% 1/10W	
R230	1-216-017-91	s	METAL, CHIP 47 5% 1/10W	
R232	1-216-049-91	s	METAL, CHIP 1k 5% 1/10W	
R233	1-216-001-00	s	METAL, CHIP 10 5% 1/10W	
R234	1-216-001-00	s	METAL, CHIP 10 5% 1/10W	
R235	1-216-001-00	s	METAL, CHIP 10 5% 1/10W	
R236	1-216-001-00	s	METAL, CHIP 10 5% 1/10W	
R251	1-216-089-91	s	METAL, CHIP 47k 5% 1/10W	
R300	1-216-295-91	s	RES, CHIP 0	
R301	1-216-049-91	s	METAL, CHIP 1k 5% 1/10W	
R302	1-216-089-91	s	METAL, CHIP 47k 5% 1/10W	
R303	1-216-049-91	s	METAL, CHIP 1k 5% 1/10W	
R306	1-216-089-91	s	METAL, CHIP 47k 5% 1/10W	
R307	1-216-089-91	s	METAL, CHIP 47k 5% 1/10W	

(SDI-26 BOARD)

Ref. No. or Q'ty	Part No.	SP	Description	
R308	1-216-109-00	s	METAL, CHIP 330k 5% 1/10W	
R310	1-216-089-91	s	METAL, CHIP 47k 5% 1/10W	
R311	1-216-049-91	s	METAL, CHIP 1k 5% 1/10W	
R312	1-216-025-91	s	METAL, CHIP 100 5% 1/10W	*1)
R313	1-216-049-91	s	METAL, CHIP 1k 5% 1/10W	
R314	1-216-025-91	s	METAL, CHIP 100 5% 1/10W	
R315	1-216-025-91	s	METAL, CHIP 100 5% 1/10W	
R316	1-216-025-91	s	METAL, CHIP 100 5% 1/10W	
R317	1-216-073-00	s	METAL, CHIP 10k 5% 1/10W	
R318	1-216-295-91	s	RES, CHIP 0	*1)
R319	1-216-049-91	s	METAL, CHIP 1k 5% 1/10W	
R320	1-216-073-00	s	METAL, CHIP 10k 5% 1/10W	
R321	1-216-073-00	s	METAL, CHIP 10k 5% 1/10W	
R322	1-216-049-91	s	METAL, CHIP 1k 5% 1/10W	
R326	1-216-073-00	s	METAL, CHIP 10k 5% 1/10W	
R329	1-216-089-91	s	METAL, CHIP 47k 5% 1/10W	
R331	1-216-295-91	s	RES, CHIP 0	*1)
R406	1-216-089-91	s	METAL, CHIP 47k 5% 1/10W	
R407	1-216-089-91	s	METAL, CHIP 47k 5% 1/10W	
R408	1-216-089-91	s	METAL, CHIP 47k 5% 1/10W	
R409	1-216-295-91	s	RES, CHIP 0	*1)
R410	1-216-295-91	s	RES, CHIP 0	*1)
R411	1-216-073-00	s	METAL, CHIP 10k 5% 1/10W	
R412	1-216-073-00	s	METAL, CHIP 10k 5% 1/10W	
R413	1-216-073-00	s	METAL, CHIP 10k 5% 1/10W	
R414	1-216-073-00	s	METAL, CHIP 10k 5% 1/10W	
R415	1-216-073-00	s	METAL, CHIP 10k 5% 1/10W	
R417	1-216-295-91	s	RES, CHIP 0	*1)
R418	1-216-295-91	s	RES, CHIP 0	*1)
R419	1-216-295-91	s	RES, CHIP 0	*1)
R420	1-216-295-91	s	RES, CHIP 0	*1)
R427	1-216-295-91	s	RES, CHIP 0	*1)
R428	1-216-073-00	s	METAL, CHIP 10k 5% 1/10W	
R431	1-216-295-91	s	RES, CHIP 0	*1)
R437	1-216-017-91	s	METAL, CHIP 47 5% 1/10W	
R438	1-216-017-91	s	METAL, CHIP 47 5% 1/10W	
R439	1-216-001-00	s	METAL, CHIP 10 5% 1/10W	
R440	1-216-001-00	s	METAL, CHIP 10 5% 1/10W	
R441	1-216-001-00	s	METAL, CHIP 10 5% 1/10W	
R442	1-216-001-00	s	METAL, CHIP 10 5% 1/10W	
R443	1-216-017-91	s	METAL, CHIP 47 5% 1/10W	
R444	1-216-017-91	s	METAL, CHIP 47 5% 1/10W	
R445	1-216-017-91	s	METAL, CHIP 47 5% 1/10W	
R446	1-216-017-91	s	METAL, CHIP 47 5% 1/10W	
R447	1-216-017-91	s	METAL, CHIP 47 5% 1/10W	
R448	1-216-017-91	s	METAL, CHIP 47 5% 1/10W	
R449	1-216-017-91	s	METAL, CHIP 47 5% 1/10W	
R450	1-216-017-91	s	METAL, CHIP 47 5% 1/10W	
R451	1-216-017-91	s	METAL, CHIP 47 5% 1/10W	
R500	1-216-623-11	s	METAL, CHIP 68 0.5% 1/10W	
R501	1-216-625-11	s	METAL, CHIP 82 0.5% 1/10W	
R502	1-216-029-00	s	METAL, CHIP 150 5% 1/10W	
R503	1-216-295-91	s	RES, CHIP 0	
R504	1-216-623-11	s	METAL, CHIP 68 0.5% 1/10W	
R505	1-216-613-11	s	METAL, CHIP 27 0.5% 1/10W	
R506	1-216-624-11	s	METAL, CHIP 75 0.5% 1/10W	
R508	1-216-623-11	s	METAL, CHIP 68 0.5% 1/10W	
R509	1-216-613-11	s	METAL, CHIP 27 0.5% 1/10W	
R510	1-216-624-11	s	METAL, CHIP 75 0.5% 1/10W	

(SDI-26 BOARD)

Ref. No. or Q'ty	Part No.	SP	Description	
R511	1-216-033-00	s	METAL, CHIP 220 5% 1/10W	
R512	1-216-049-91	s	METAL, CHIP 1k 5% 1/10W	
R513	1-216-073-00	s	METAL, CHIP 10k 5% 1/10W	
R514	1-216-033-00	s	METAL, CHIP 220 5% 1/10W	
R515	1-216-033-00	s	METAL, CHIP 220 5% 1/10W	
R516	1-216-033-00	s	METAL, CHIP 220 5% 1/10W	
R517	1-216-033-00	s	METAL, CHIP 220 5% 1/10W	
R518	1-216-033-00	s	METAL, CHIP 220 5% 1/10W	
R519	1-216-033-00	s	METAL, CHIP 220 5% 1/10W	
R520	1-216-033-00	s	METAL, CHIP 220 5% 1/10W	
R521	1-216-033-00	s	METAL, CHIP 220 5% 1/10W	
R522	1-216-033-00	s	METAL, CHIP 220 5% 1/10W	
R523	1-216-033-00	s	METAL, CHIP 220 5% 1/10W	
R524	1-216-033-00	s	METAL, CHIP 220 5% 1/10W	
R525	1-216-033-00	s	METAL, CHIP 220 5% 1/10W	
R526	1-216-689-11	s	METAL, CHIP 39k 0.5% 1/10W	
R527	1-216-077-00	s	METAL, CHIP 15k 5% 1/10W	
R528	1-216-689-11	s	METAL, CHIP 39k 0.5% 1/10W	
R529	1-216-077-00	s	METAL, CHIP 15k 5% 1/10W	
R530	1-216-295-91	s	RES, CHIP 0	*1)
R531	1-216-025-91	s	METAL, CHIP 100 5% 1/10W	
R532	1-216-025-91	s	METAL, CHIP 100 5% 1/10W	
R533	1-216-295-91	s	RES, CHIP 0	*1)
R534	1-216-295-91	s	RES, CHIP 0	*1)
R535	1-216-049-91	s	METAL, CHIP 1k 5% 1/10W	
R536	1-216-089-91	s	METAL, CHIP 47k 5% 1/10W	
R537	1-216-073-00	s	METAL, CHIP 10k 5% 1/10W	
R538	1-216-295-91	s	RES, CHIP 0	
R539	1-216-295-91	s	RES, CHIP 0	
R542	1-216-651-11	s	METAL, CHIP 1k 0.5% 1/10W	
R543	1-216-651-11	s	METAL, CHIP 1k 0.5% 1/10W	
R545	1-216-675-11	s	METAL, CHIP 10k 0.5% 1/10W	
R546	1-216-653-11	s	METAL, CHIP 1.2k 0.5% 1/10W	
R548	1-216-295-91	s	RES, CHIP 0	
R549	1-216-685-11	s	METAL, CHIP 27k 0.5% 1/10W	
R550	1-216-037-00	s	METAL, CHIP 330 5% 1/10W	
R560	1-216-295-91	s	RES, CHIP 0	
R562	1-216-663-11	s	METAL, CHIP 3.3k 0.5% 1/10W	
R563	1-216-295-91	s	RES, CHIP 0	
R564	1-216-627-11	s	METAL, CHIP 100 0.5% 1/10W	
R601	1-216-009-00	s	METAL, CHIP 22 5% 1/10W	*1)
R603	1-216-001-00	s	METAL, CHIP 10 5% 1/10W	
R604	1-216-001-00	s	METAL, CHIP 10 5% 1/10W	
R605	1-216-001-00	s	METAL, CHIP 10 5% 1/10W	
R606	1-216-001-00	s	METAL, CHIP 10 5% 1/10W	
R610	1-216-295-91	s	RES, CHIP 0	
R611	1-216-295-91	s	RES, CHIP 0	
R612	1-216-075-00	s	METAL, CHIP 12k 5% 1/10W	
R613	1-216-075-00	s	METAL, CHIP 12k 5% 1/10W	
R616	1-216-295-91	s	RES, CHIP 0	
R617	1-216-295-91	s	RES, CHIP 0	
R618	1-216-295-91	s	RES, CHIP 0	
R621	1-216-295-91	s	RES, CHIP 0	
R622	1-216-295-91	s	RES, CHIP 0	
R623	1-216-295-91	s	RES, CHIP 0	*1)
R624	1-216-295-91	s	RES, CHIP 0	*1)
R625	1-216-679-11	s	METAL, CHIP 15k 0.5% 1/10W	
R626	1-216-679-11	s	METAL, CHIP 15k 0.5% 1/10W	
R627	1-216-657-11	s	METAL, CHIP 1.8k 0.5% 1/10W	

(SDI-26 BOARD)

Ref. No. or Q'ty	Part No.	SP	Description	
R628	1-216-638-11	s	METAL, CHIP 300 0.5% 1/10W	
R629	1-216-657-11	s	METAL, CHIP 1.8k 0.5% 1/10W	
R630	1-216-638-11	s	METAL, CHIP 300 0.5% 1/10W	
R631	1-216-295-91	s	RES, CHIP 0	*1)
R636	1-216-295-91	s	RES, CHIP 0	*1)
R641	1-216-295-91	s	RES, CHIP 0	*1)
R642	1-216-295-91	s	RES, CHIP 0	*1)
R643	1-216-295-91	s	RES, CHIP 0	*1)
R644	1-216-295-91	s	RES, CHIP 0	*1)
R645	1-216-025-91	s	METAL, CHIP 100 5% 1/10W	
R646	1-216-025-91	s	METAL, CHIP 100 5% 1/10W	
R647	1-216-017-91	s	METAL, CHIP 47 5% 1/10W	
R648	1-216-017-91	s	METAL, CHIP 47 5% 1/10W	
R649	1-216-017-91	s	METAL, CHIP 47 5% 1/10W	
R650	1-216-017-91	s	METAL, CHIP 47 5% 1/10W	
R651	1-216-025-91	s	METAL, CHIP 100 5% 1/10W	
RB101	1-239-409-11	s	RESISTOR BLOCK, CHIP 47 x 4	
RB102	1-239-409-11	s	RESISTOR BLOCK, CHIP 47 x 4	
RB200	1-239-998-11	s	RESISTOR BLOCK, CHIP 100 x 4	
RB300	1-239-306-11	s	RESISTOR BLOCK, CHIP 10k x 8	
RB301	1-239-306-11	s	RESISTOR BLOCK, CHIP 10k x 8	
RB302	1-239-306-11	s	RESISTOR BLOCK, CHIP 10k x 8	
RB601	1-233-448-11	s	RESISTOR BLOCK, CHIP 22 x 4	*1)
RB602	1-239-998-11	s	RESISTOR BLOCK, CHIP 100 x 4	
RB603	1-239-998-11	s	RESISTOR BLOCK, CHIP 100 x 4	
RV100	1-237-034-11	s	RES, ADJ, METAL 2k	
RV500	1-237-034-11	s	RES, ADJ, METAL 2k	
S301	1-554-843-11	s	SWITCH, SLIDE	
X300	1-579-175-11	s	RESONATOR, CERAMIC 10.00MHz	

SDI-27 BOARD(DSBK-120/120P)

Ref. No.
or Q'ty Part No. SP Description

The parts marked * are different, depending on the product serial numbers, as shown below:
*1) Serial number; 10001 through 11280 (For DSBK-120 J)
Serial number; 10001 through 11380 (For DSBK-120 UC)
Serial number; 10001 through 10710 (For DSBK-120P CE)
*2) Serial number; 11631 and higher (For DSBK-120 J)
Serial number; 11381 and higher (For DSBK-120 UC)
Serial number; 11431 and higher (For DSBK-120P CE)

Ref. No. or Q'ty	Part No.	SP	Description
1pc	A-8277-890-A	o	MOUNTED CIRCUIT BOARD, SDI-27
2pcs	7-621-759-45	s	+PSW, 2.6x6
1pc	3-189-543-03	o	IC HEAT SINK (A)
1pc	3-189-544-04	o	IC HEAT SINK (B)
1pc	7-621-770-87	s	SCREW +B 2.6x5
2pcs	7-623-422-07	s	LW 3, TYPE B
C101	1-163-021-91	s	CERAMIC, CHIP 0.01uF 10% 50V
C102	1-163-021-91	s	CERAMIC, CHIP 0.01uF 10% 50V
C103	1-126-394-11	s	ELECT, CHIP 10uF 20% 16V
C104	1-163-038-91	s	CERAMIC, CHIP 0.1uF 25V
C105	1-163-038-91	s	CERAMIC, CHIP 0.1uF 25V
C106	1-163-038-91	s	CERAMIC, CHIP 0.1uF 25V
C107	1-163-237-11	s	CERAMIC, CHIP 27pF 5% 50V
C108	1-163-243-11	s	CERAMIC, CHIP 47pF 5% 50V
C109	1-126-394-11	s	ELECT, CHIP 10uF 20% 16V
C111	1-163-038-91	s	CERAMIC, CHIP 0.1uF 25V
C112	1-163-038-91	s	CERAMIC, CHIP 0.1uF 25V
C113	1-163-021-91	s	CERAMIC, CHIP 0.01uF 10% 50V
C114	1-163-038-91	s	CERAMIC, CHIP 0.1uF 25V
C115	1-163-038-91	s	CERAMIC, CHIP 0.1uF 25V
C116	1-126-394-11	s	ELECT, CHIP 10uF 20% 16V
C117	1-163-038-91	s	CERAMIC, CHIP 0.1uF 25V
C118	1-163-038-91	s	CERAMIC, CHIP 0.1uF 25V
C119	1-163-038-91	s	CERAMIC, CHIP 0.1uF 25V
C120	1-163-038-91	s	CERAMIC, CHIP 0.1uF 25V
C121	1-163-038-91	s	CERAMIC, CHIP 0.1uF 25V
C122	1-163-038-91	s	CERAMIC, CHIP 0.1uF 25V
C123	1-163-038-91	s	CERAMIC, CHIP 0.1uF 25V
C124	1-163-038-91	s	CERAMIC, CHIP 0.1uF 25V
C125	1-126-394-11	s	ELECT, CHIP 10uF 20% 16V
C126	1-163-038-91	s	CERAMIC, CHIP 0.1uF 25V
C127	1-163-038-91	s	CERAMIC, CHIP 0.1uF 25V
C128	1-163-038-91	s	CERAMIC, CHIP 0.1uF 25V
C129	1-163-038-91	s	CERAMIC, CHIP 0.1uF 25V
C130	1-163-038-91	s	CERAMIC, CHIP 0.1uF 25V
C131	1-163-038-91	s	CERAMIC, CHIP 0.1uF 25V
C132	1-163-038-91	s	CERAMIC, CHIP 0.1uF 25V
C133	1-163-038-91	s	CERAMIC, CHIP 0.1uF 25V
C134	1-163-038-91	s	CERAMIC, CHIP 0.1uF 25V
C135	1-163-038-91	s	CERAMIC, CHIP 0.1uF 25V
C136	1-126-925-11	s	ELECT 470uF 20% 10V
C137	1-126-392-11	s	ELECT, CHIP 100uF 20% 6.3V
C138	1-163-038-91	s	CERAMIC, CHIP 0.1uF 25V
C201	1-163-038-91	s	CERAMIC, CHIP 0.1uF 25V
C202	1-163-021-91	s	CERAMIC 0.01uF 10% 50V
C203	1-163-038-91	s	CERAMIC, CHIP 0.1uF 25V
C204	1-163-038-91	s	CERAMIC, CHIP 0.1uF 25V
C205	1-163-038-91	s	CERAMIC, CHIP 0.1uF 25V
C206	1-126-925-11	s	ELECT 470uF 20% 10V
C207	1-163-038-91	s	CERAMIC, CHIP 0.1uF 25V

(SDI-27 BOARD(DSBK-120/120P))

Ref. No. or Q'ty	Part No.	SP	Description
C208	1-126-391-11	s	ELECT, CHIP 47uF 20% 6.3V
C209	1-163-038-91	s	CERAMIC, CHIP 0.1uF 25V
C210	1-126-925-11	s	ELECT 470uF 20% 10V
C301	1-163-038-91	s	CERAMIC, CHIP 0.1uF 25V
C302	1-163-038-91	s	CERAMIC, CHIP 0.1uF 25V
C303	1-163-038-91	s	CERAMIC, CHIP 0.1uF 25V
C304	1-163-038-91	s	CERAMIC, CHIP 0.1uF 25V
C305	1-163-038-91	s	CERAMIC, CHIP 0.1uF 25V
C306	1-163-038-91	s	CERAMIC, CHIP 0.1uF 25V
C307	1-163-038-91	s	CERAMIC, CHIP 0.1uF 25V
C308	1-126-394-11	s	ELECT, CHIP 10uF 20% 16V
C309	1-163-038-91	s	CERAMIC, CHIP 0.1uF 25V
C310	1-163-038-91	s	CERAMIC, CHIP 0.1uF 25V
C311	1-163-038-91	s	CERAMIC, CHIP 0.1uF 25V
C312	1-163-038-91	s	CERAMIC, CHIP 0.1uF 25V
C313	1-163-038-91	s	CERAMIC, CHIP 0.1uF 25V
C314	1-163-038-91	s	CERAMIC, CHIP 0.1uF 25V
C315	1-163-038-91	s	CERAMIC, CHIP 0.1uF 25V
C316	1-163-038-91	s	CERAMIC, CHIP 0.1uF 25V
C317	1-126-394-11	s	ELECT, CHIP 10uF 20% 16V
C318	1-126-394-11	s	ELECT, CHIP 10uF 20% 16V
C319	1-163-038-91	s	CERAMIC, CHIP 0.1uF 25V
C320	1-163-038-91	s	CERAMIC, CHIP 0.1uF 25V
C321	1-163-038-91	s	CERAMIC, CHIP 0.1uF 25V
C322	1-163-239-11	s	CERAMIC, CHIP 33pF 5% 50V
CN27	1-774-376-11	s	CONNECTOR, BB 68P
CN101	1-750-880-11	s	CONNECTOR, MINI-COAX, FEMALE
CN102	1-750-880-11	s	CONNECTOR, MINI-COAX, FEMALE
D101	8-719-404-35	s	DIODE MA141WK
D102	8-719-987-43	s	LED CL-150PG-CD, GRN
D103	8-719-404-35	s	DIODE MA141WK
D201	8-719-987-43	s	DIODE CL-150PG-CD
D204	8-719-989-22	s	LED CL-150R-CD, RED
D301	8-719-989-22	s	LED CL-150R-CD, RED
D302	8-719-989-22	s	LED CL-150R-CD, RED
D303	8-719-989-22	s	LED CL-150R-CD, RED
D304	8-719-989-22	s	LED CL-150R-CD, RED
D305	8-719-987-43	s	LED CL-150PG-CD, GRN
D306	8-719-987-43	s	LED CL-150PG-CD, GRN
D307	8-719-987-43	s	LED CL-150PG-CD, GRN
D308	8-719-987-43	s	LED CL-150PG-CD, GRN
E101	1-535-881-21	o	TERMINAL, TP
E301	1-535-881-21	o	TERMINAL, TP
FB101	1-543-813-21	s	CHOKE, NOISE, CHIP
FB102	1-543-813-21	s	CHOKE, NOISE, CHIP
FB104	1-543-813-21	s	CHOKE, NOISE, CHIP
FB105	1-543-813-21	s	CHOKE, NOISE, CHIP
FB106	1-543-813-21	s	CHOKE, NOISE, CHIP
FB107	1-543-813-21	s	CHOKE, NOISE, CHIP
IC101	8-741-602-21	s	IC SBX1602A
IC102	8-759-209-57	s	IC TC4S69F
IC103	8-759-436-92	s	IC MC10125P
IC104	8-759-436-92	s	IC MC10125P
IC105	8-759-436-92	s	IC MC10125P
IC106	8-759-324-03	s	IC HA17431UA-TL
IC107	8-759-510-71	s	IC UPC358G2-E2
IC108	8-759-186-84	s	IC TC74VHC86F(EL)

(SDI-27 BOARD(DSBK-120/120P))

Ref. No. or Q'ty	Part No.	SP	Description
IC201	8-759-058-64	s	IC TC7S32FU(TE85R)
IC202	8-759-172-72	s	IC CXD8386AQ
IC203	8-759-925-74	s	IC SN74HC04ANS
IC205	8-759-186-77	s	IC TC74VHC541F
IC206	8-759-186-77	s	IC TC74VHC541F
IC301	8-759-926-49	s	IC SN74HC245ANS
IC302	8-759-926-77	s	IC SN74HC541ANS
IC303	8-759-272-21	s	IC TC74VHCT541F
IC304	8-759-175-27	s	IC TC74VHC574F
IC305	8-759-186-77	s	IC TC74VHC541F
IC306	8-759-186-38	s	IC TC74VHC32F(EL)
IC307	8-759-186-49	s	IC TC74VHC139F(EL)
IC308	8-759-925-74	s	IC SN74HC04ANS
IC309	8-759-289-69	s	IC CXD8280AQ
IC310	8-759-926-49	s	IC SN74HC245ANS
IC311	8-759-925-82	s	IC SN74HC21ANS
	*1)		
IC312	8-759-239-55	s	IC TC74HC123AF
IC313	8-759-239-55	s	IC TC74HC123AF
IC314	8-759-925-76	s	IC SN74HC08NS
IC315	8-759-186-63	s	IC TC74VHC245F(EL)
IC316	8-759-186-77	s	IC TC74VHC541F
IC317	8-759-186-30	s	IC TC74VHC14F(EL)
L201	1-412-533-21	s	INDUCTOR 47uH
L202	1-412-533-21	s	INDUCTOR 47uH
L203	1-412-533-21	s	INDUCTOR 47uH
Q102	8-729-105-68	s	TRANSISTOR 2SC3356-K
Q103	8-729-105-68	s	TRANSISTOR 2SC3356-K
Q104	8-729-105-68	s	TRANSISTOR 2SC3356-K
Q105	8-729-105-68	s	TRANSISTOR 2SC3356-K
Q106	8-729-105-68	s	TRANSISTOR 2SC3356-K
Q201	8-729-029-14	s	TRANSISTOR DTC144EUA-T106
R101	1-216-295-91	s	RES, CHIP 0
R102	1-216-079-00	s	METAL, CHIP 18k 5% 1/10W
R103	1-216-623-11	s	METAL, CHIP 68 0.5% 1/10W
R104	1-216-635-11	s	METAL, CHIP 220 0.5% 1/10W
R105	1-216-611-11	s	METAL, CHIP 22 0.5% 1/10W
R106	1-216-624-11	s	METAL, CHIP 75 0.5% 1/10W
R107	1-216-631-11	s	METAL, CHIP 150 0.5% 1/10W
R108	1-216-619-11	s	METAL, CHIP 47 0.5% 1/10W
R109	1-216-073-00	s	METAL, CHIP 10k 5% 1/10W
R110	1-216-073-00	s	METAL, CHIP 10k 5% 1/10W
R111	1-216-057-00	s	METAL, CHIP 2.2k 5% 1/10W
R112	1-216-059-00	s	METAL, CHIP 2.7k 5% 1/10W
R113	1-216-071-00	s	METAL, CHIP 8.2k 5% 1/10W
R114	1-216-025-91	s	METAL, CHIP 100 5% 1/10W
R115	1-216-049-91	s	METAL, CHIP 1k 5% 1/10W
R116	1-216-049-91	s	METAL, CHIP 1k 5% 1/10W
R117	1-216-049-91	s	METAL, CHIP 1k 5% 1/10W
R118	1-216-033-00	s	METAL, CHIP 220 5% 1/10W
R119	1-216-033-00	s	METAL, CHIP 220 5% 1/10W
R120	1-216-033-00	s	METAL, CHIP 220 5% 1/10W
R121	1-216-049-91	s	METAL, CHIP 1k 5% 1/10W
R122	1-216-049-91	s	METAL, CHIP 1k 5% 1/10W
R123	1-216-049-91	s	METAL, CHIP 1k 5% 1/10W
R124	1-216-049-91	s	METAL, CHIP 1k 5% 1/10W
R125	1-216-033-00	s	METAL, CHIP 220 5% 1/10W
R126	1-216-033-00	s	METAL, CHIP 220 5% 1/10W

(SDI-27 BOARD(DSBK-120/120P))

Ref. No. or Q'ty	Part No.	SP	Description
R127	1-216-033-00	s	METAL, CHIP 220 5% 1/10W
R128	1-216-033-00	s	METAL, CHIP 220 5% 1/10W
R129	1-216-049-91	s	METAL, CHIP 1k 5% 1/10W
R130	1-216-049-91	s	METAL, CHIP 1k 5% 1/10W
R131	1-216-049-91	s	METAL, CHIP 1k 5% 1/10W
R132	1-216-049-91	s	METAL, CHIP 1k 5% 1/10W
R133	1-216-049-91	s	METAL, CHIP 1k 5% 1/10W
R134	1-216-033-00	s	METAL, CHIP 220 5% 1/10W
R135	1-216-033-00	s	METAL, CHIP 220 5% 1/10W
R136	1-216-033-00	s	METAL, CHIP 220 5% 1/10W
R137	1-216-033-00	s	METAL, CHIP 220 5% 1/10W
R138	1-216-033-00	s	METAL, CHIP 220 5% 1/10W
R139	1-216-001-00	s	METAL, CHIP 10 5% 1/10W
R140	1-216-001-00	s	METAL, CHIP 10 5% 1/10W
R141	1-216-001-00	s	METAL, CHIP 10 5% 1/10W
R142	1-216-001-00	s	METAL, CHIP 10 5% 1/10W
R143	1-216-623-11	s	METAL, CHIP 68 0.5% 1/10W
R144	1-216-651-11	s	METAL, CHIP 1k 0.5% 1/10W
R145	1-216-029-00	s	METAL, CHIP 150 5% 1/10W
R146	1-216-619-11	s	METAL, CHIP 47 0.5% 1/10W
R147	1-216-625-11	s	METAL, CHIP 82 0.5% 1/10W
R148	1-216-624-11	s	METAL, CHIP 75 0.5% 1/10W
R149	1-216-613-11	s	METAL, CHIP 27 0.5% 1/10W
R150	1-216-613-11	s	METAL, CHIP 27 0.5% 1/10W
R151	1-216-633-11	s	METAL, CHIP 180 0.5% 1/10W
R152	1-216-633-11	s	METAL, CHIP 180 0.5% 1/10W
R153	1-216-033-00	s	METAL, CHIP 220 5% 1/10W
R154	1-216-033-00	s	METAL, CHIP 220 5% 1/10W
R155	1-216-037-00	s	METAL, CHIP 330 5% 1/10W
R156	1-216-049-91	s	METAL, CHIP 1k 5% 1/10W
R157	1-216-295-91	s	RES, CHIP 0
R158	1-216-295-91	s	RES, CHIP 0
R161	1-216-651-11	s	METAL, CHIP 1k 0.5% 1/10W
R162	1-216-651-11	s	METAL, CHIP 1k 0.5% 1/10W
R163	1-216-653-11	s	METAL, CHIP 1.2k 0.5% 1/10W
R165	1-216-675-11	s	METAL, CHIP 10k 0.5% 1/10W
R167	1-216-295-91	s	RES, CHIP 0
R168	1-216-295-91	s	RES, CHIP 0
R169	1-216-687-11	s	METAL, CHIP 33k 0.5% 1/10W
R171	1-216-663-11	s	METAL, CHIP 3.3k 0.5% 1/10W
R172	1-216-643-11	s	METAL, CHIP 470 0.5% 1/10W
R173	1-216-627-11	s	METAL, CHIP 100 0.5% 1/10W
R174	1-216-097-91	s	METAL, CHIP 100k 5% 1/10W
R176	1-216-025-91	s	METAL, CHIP 100 5% 1/10W
R177	1-216-025-91	s	METAL, CHIP 100 5% 1/10W
R178	1-216-025-91	s	METAL, CHIP 100 5% 1/10W
R179	1-216-025-91	s	METAL, CHIP 100 5% 1/10W
R180	1-216-025-91	s	METAL, CHIP 100 5% 1/10W
R181	1-216-025-91	s	METAL, CHIP 100 5% 1/10W
R182	1-216-025-91	s	METAL, CHIP 100 5% 1/10W
R183	1-216-025-91	s	METAL, CHIP 100 5% 1/10W
R184	1-216-025-91	s	METAL, CHIP 100 5% 1/10W
R185	1-216-025-91	s	METAL, CHIP 100 5% 1/10W
R186	1-216-021-00	s	METAL, CHIP 68 5% 1/10W
R188	1-216-025-91	s	METAL, CHIP 100 5% 1/10W
R201	1-216-049-91	s	METAL, CHIP 1k 5% 1/10W
R202	1-216-049-91	s	METAL, CHIP 1k 5% 1/10W
R203	1-216-295-91	s	RES, CHIP 0
R204	1-216-295-91	s	RES, CHIP 0

(SDI-27 BOARD(DSBK-120/120P))

Ref. No. or Q'ty	Part No.	SP	Description	
R205	1-216-295-91	s	RES, CHIP 0	
R206	1-216-295-91	s	RES, CHIP 0	
R207	1-216-295-91	s	RES, CHIP 0	
R208	1-216-295-91	s	RES, CHIP 0	
R210	1-216-295-91	s	RES, CHIP 0	
R212	1-216-295-91	s	RES, CHIP 0	
R214	1-216-295-91	s	RES, CHIP 0	
R215	1-216-295-91	s	RES, CHIP 0	
R217	1-216-085-00	s	METAL, CHIP 33k 5% 1/10W	
R223	1-216-037-00	s	METAL, CHIP 330 5% 1/10W	
R227	1-216-037-00	s	METAL, CHIP 330 5% 1/10W	
R228	1-216-009-00	s	METAL, CHIP 22 5% 1/10W	
R229	1-216-009-00	s	METAL, CHIP 22 5% 1/10W	
R230	1-216-049-91	s	METAL, CHIP 1k 5% 1/10W	
R233	1-216-009-00	s	METAL, CHIP 22 5% 1/10W	
R234	1-216-065-91	s	METAL, CHIP 4.7k 5% 1/10W	
R302	1-216-025-91	s	METAL, CHIP 100 5% 1/10W	
R303	1-216-109-00	s	METAL, CHIP 330k 5% 1/10W	
R304	1-216-049-91	s	METAL, CHIP 1k 5% 1/10W	
R305	1-216-295-91	s	RES, CHIP 0	
R306	1-216-295-91	s	RES, CHIP 0	
R307	1-216-295-91	s	RES, CHIP 0	
R308	1-216-115-00	s	METAL, CHIP 560k 5% 1/10W	
R309	1-216-115-00	s	METAL, CHIP 560k 5% 1/10W	
R310	1-216-115-00	s	METAL, CHIP 560k 5% 1/10W	
R311	1-216-115-00	s	METAL, CHIP 560k 5% 1/10W	
R312	1-216-037-00	s	METAL, CHIP 330 5% 1/10W	
R313	1-216-037-00	s	METAL, CHIP 330 5% 1/10W	
R314	1-216-037-00	s	METAL, CHIP 330 5% 1/10W	
R315	1-216-037-00	s	METAL, CHIP 330 5% 1/10W	
R316	1-216-037-00	s	METAL, CHIP 330 5% 1/10W	
R317	1-216-037-00	s	METAL, CHIP 330 5% 1/10W	
R318	1-216-037-00	s	METAL, CHIP 330 5% 1/10W	
R319	1-216-037-00	s	METAL, CHIP 330 5% 1/10W	
R321	1-216-025-91	s	METAL, CHIP 100 5% 1/10W	
R322	1-249-441-11	s	CARBON 100k 5% 1/4W	*2)
RB201	1-233-448-11	s	RESISTOR BLOCK, CHIP 22 x 4	
RB202	1-233-448-11	s	RESISTOR BLOCK, CHIP 22 x 4	
RB203	1-239-998-11	s	RESISTOR BLOCK, CHIP 100 x 4	
RB301	1-239-998-11	s	RESISTOR BLOCK, CHIP 100 x 4	
RB302	1-239-998-11	s	RESISTOR BLOCK, CHIP 100 x 4	
RB303	1-239-998-11	s	RESISTOR BLOCK, CHIP 100 x 4	
RB304	1-239-998-11	s	RESISTOR BLOCK, CHIP 100 x 4	
RB305	1-239-998-11	s	RESISTOR BLOCK, CHIP 100 x 4	
RB306	1-239-998-11	s	RESISTOR BLOCK, CHIP 100 x 4	
RV101	1-241-262-11	s	RES, ADJ, METAL 2k	

SDI-28 BOARD(DSBK-120/120P)

Ref. No. or Q'ty	Part No.	SP	Description
1pc	A-8277-892-A	o	MOUNTED CIRCUIT BOARD, SDI-28
2pcs	7-621-759-45	s	+PSW, 2.6x6
1pc	3-189-543-03	o	IC HEAT SINk (A)
1pc	3-189-544-04	o	IC HEAT SINk (B)
1pc	7-621-770-87	s	SCREW +B 2.6x5
2pcs	7-623-422-07	s	LW 3, TYPE B
C101	1-163-038-91	s	CERAMIC, CHIP 0.1uF 25V
C102	1-163-038-91	s	CERAMIC, CHIP 0.1uF 25V
C103	1-163-038-91	s	CERAMIC, CHIP 0.1uF 25V
C104	1-163-038-91	s	CERAMIC, CHIP 0.1uF 25V
C106	1-163-251-11	s	CERAMIC, CHIP 100pF 5% 50V
C107	1-163-038-91	s	CERAMIC, CHIP 0.1uF 25V
C108	1-163-038-91	s	CERAMIC, CHIP 0.1uF 25V
C109	1-163-251-11	s	CERAMIC, CHIP 100pF 5% 50V
C110	1-163-038-91	s	CERAMIC, CHIP 0.1uF 25V
C111	1-163-038-91	s	CERAMIC, CHIP 0.1uF 25V
C112	1-163-038-91	s	CERAMIC, CHIP 0.1uF 25V
C113	1-163-038-91	s	CERAMIC, CHIP 0.1uF 25V
C114	1-163-038-91	s	CERAMIC, CHIP 0.1uF 25V
C115	1-163-038-91	s	CERAMIC, CHIP 0.1uF 25V
C116	1-163-275-11	s	CERAMIC, CHIP 0.001uF 5% 50V
C117	1-163-038-91	s	CERAMIC, CHIP 0.1uF 25V
C118	1-163-038-91	s	CERAMIC, CHIP 0.1uF 25V
C119	1-163-038-91	s	CERAMIC, CHIP 0.1uF 25V
C120	1-163-038-91	s	CERAMIC, CHIP 0.1uF 25V
C121	1-126-391-11	s	ELECT, CHIP 47uF 20% 6.3V
C122	1-163-038-91	s	CERAMIC, CHIP 0.1uF 25V
C123	1-126-391-11	s	ELECT, CHIP 47uF 20% 6.3V
C124	1-163-038-91	s	CERAMIC, CHIP 0.1uF 25V
C125	1-163-038-91	s	CERAMIC, CHIP 0.1uF 25V
C126	1-126-925-11	s	ELECT 470uF 20% 10V
C127	1-163-038-91	s	CERAMIC, CHIP 0.1uF 25V
C128	1-163-038-91	s	CERAMIC, CHIP 0.1uF 25V
C129	1-163-251-11	s	CERAMIC, CHIP 100pF 5% 50V
C130	1-163-239-11	s	CERAMIC, CHIP 33pF 5% 50V
C201	1-163-038-91	s	CERAMIC, CHIP 0.1uF 25V
C202	1-163-038-91	s	CERAMIC, CHIP 0.1uF 25V
C203	1-126-394-11	s	ELECT, CHIP 10uF 20% 16V
C204	1-163-038-91	s	CERAMIC, CHIP 0.1uF 25V
C205	1-163-038-91	s	CERAMIC, CHIP 0.1uF 25V
C206	1-163-038-91	s	CERAMIC, CHIP 0.1uF 25V
C207	1-163-121-00	s	CERAMIC, CHIP 150pF 5% 50V
C208	1-126-394-11	s	ELECT, CHIP 10uF 20% 16V
C210	1-163-038-91	s	CERAMIC, CHIP 0.1uF 25V
C211	1-163-038-91	s	CERAMIC, CHIP 0.1uF 25V
C212	1-163-038-91	s	CERAMIC, CHIP 0.1uF 25V
C213	1-163-038-91	s	CERAMIC, CHIP 0.1uF 25V
C214	1-163-038-91	s	CERAMIC, CHIP 0.1uF 25V
C215	1-126-925-11	s	ELECT 470uF 20% 10V
C216	1-163-038-91	s	CERAMIC, CHIP 0.1uF 25V
C217	1-163-038-91	s	CERAMIC, CHIP 0.1uF 25V
C218	1-163-038-91	s	CERAMIC, CHIP 0.1uF 25V
C219	1-126-392-11	s	ELECT, CHIP 100uF 20% 6.3V
C220	1-126-392-11	s	ELECT, CHIP 100uF 20% 6.3V
C221	1-126-392-11	s	ELECT, CHIP 100uF 20% 6.3V
C222	1-163-038-91	s	CERAMIC, CHIP 0.1uF 25V
C223	1-163-038-91	s	CERAMIC, CHIP 0.1uF 25V
C301	1-163-133-00	s	CERAMIC, CHIP 470pF 5% 50V

(SDI-28 BOARD(DSBK-120/120P))

Ref. No. or Q'ty	Part No.	SP	Description
C302	1-126-394-11	s	ELECT, CHIP 10uF 20% 16V
C303	1-163-033-91	s	CERAMIC, CHIP 0.022uF 50V
C304	1-163-033-91	s	CERAMIC, CHIP 0.022uF 50V
C306	1-163-038-91	s	CERAMIC, CHIP 0.1uF 25V
CN28	1-774-376-11	s	CONNECTOR, BB 68P
CN201	1-750-880-11	s	CONNECTOR, MINI-COAX, FEMALE
CN202	1-750-880-11	s	CONNECTOR, MINI-COAX, FEMALE
CNI301	1-526-950-11	o	SOCKET, IC 64P
D101	8-719-820-41	s	DIODE 1SS302
D201	8-719-404-35	s	DIODE MA141WK
D202	8-719-989-22	s	LED CL-150R-CD, RED
D203	8-719-404-35	s	DIODE MA141WK
E201	1-535-881-21	o	TERMINAL, TP
E301	1-535-881-21	o	TERMINAL, TP
FB201	1-543-813-21	s	CHOKE, NOISE, CHIP
FB202	1-543-813-21	s	CHOKE, NOISE, CHIP
FB203	1-543-813-21	s	CHOKE, NOISE, CHIP
FB204	1-543-813-21	s	CHOKE, NOISE, CHIP
FB205	1-543-813-21	s	CHOKE, NOISE, CHIP
IC101	8-759-272-21	s	IC TC74VHCT541F
IC102	8-759-272-21	s	IC TC74VHCT541F
IC103	8-759-081-44	s	IC TC74VHC04F
IC104	8-759-186-53	s	IC TC74VHC163F(EL)
IC105	8-759-186-53	s	IC TC74VHC163F(EL)
IC106	8-759-186-30	s	IC TC74VHC14F(EL)
IC107	8-759-186-53	s	IC TC74VHC163F(EL)
IC108	8-759-186-53	s	IC TC74VHC163F(EL)
IC109	8-759-186-53	s	IC TC74VHC163F(EL)
IC110	8-759-456-03	s	IC M66256GP-E2
IC111	8-759-186-38	s	IC TC74VHC32F(EL)
IC112	8-759-519-12	s	IC CXD8281Q
IC113	8-759-172-73	s	IC CXD8385Q
IC114	8-759-271-86	s	IC TC7SH04FU
IC115	8-759-175-27	s	IC TC74VHC574F
IC116	8-759-186-30	s	IC TC74VHC14F(EL)
IC201	8-741-601-11	s	IC SBX1601A
IC202	8-759-510-71	s	IC UPC358G2-E2
IC203	8-759-324-03	s	IC HA17431UA-TL
IC301	8-759-483-67	s	IC UPD78011FCW-026
IC303	8-759-926-80	s	IC SN74HC573NS
IC304	8-759-276-00	s	IC TC7W139FU(TE12R)
L101	1-412-533-21	s	INDUCTOR 47uH
L102	1-412-533-21	s	INDUCTOR 47uH
L103	1-412-533-21	s	INDUCTOR 47uH
L201	1-414-102-11	s	INDUCTOR 0.22uH
Q101	8-729-029-14	s	TRANSISTOR DTC144EUA-T106
Q102	8-729-029-14	s	TRANSISTOR DTC144EUA-T106
Q103	8-729-029-14	s	TRANSISTOR DTC144EUA-T106
Q201	8-729-105-68	s	TRANSISTOR 2SC3356-K
Q202	8-729-105-68	s	TRANSISTOR 2SC3356-K
Q203	8-729-105-68	s	TRANSISTOR 2SC3356-K
Q204	8-729-105-68	s	TRANSISTOR 2SC3356-K
Q205	8-729-105-68	s	TRANSISTOR 2SC3356-K
Q206	8-729-028-91	s	TRANSISTOR DTA144EUA-T106
Q208	8-729-028-91	s	TRANSISTOR DTA144EUA-T106
R101	1-216-025-91	s	METAL, CHIP 100 5% 1/10W

(SDI-28 BOARD(DSBK-120/120P))

Ref. No. or Q'ty	Part No.	SP	Description
R102	1-216-025-91	s	METAL, CHIP 100 5% 1/10W
R103	1-216-025-91	s	METAL, CHIP 100 5% 1/10W
R104	1-216-025-91	s	METAL, CHIP 100 5% 1/10W
R106	1-216-295-91	s	RES, CHIP 0
R107	1-216-025-91	s	METAL, CHIP 100 5% 1/10W
R109	1-216-295-91	s	RES, CHIP 0
R110	1-216-025-91	s	METAL, CHIP 100 5% 1/10W
R111	1-216-295-91	s	RES, CHIP 0
R112	1-216-295-91	s	RES, CHIP 0
R113	1-216-295-91	s	RES, CHIP 0
R114	1-216-295-91	s	RES, CHIP 0
R115	1-216-073-00	s	METAL, CHIP 10k 5% 1/10W
R116	1-216-049-91	s	METAL, CHIP 1k 5% 1/10W
R117	1-216-295-91	s	RES, CHIP 0
R118	1-216-073-00	s	METAL, CHIP 10k 5% 1/10W
R119	1-216-109-00	s	METAL, CHIP 330k 5% 1/10W
R120	1-216-073-00	s	METAL, CHIP 10k 5% 1/10W
R121	1-216-073-00	s	METAL, CHIP 10k 5% 1/10W
R122	1-216-049-91	s	METAL, CHIP 1k 5% 1/10W
R127	1-216-295-91	s	RES, CHIP 0
R128	1-216-295-91	s	RES, CHIP 0
R129	1-216-295-91	s	RES, CHIP 0
R130	1-216-295-91	s	RES, CHIP 0
R132	1-216-049-91	s	METAL, CHIP 1k 5% 1/10W
R134	1-216-295-91	s	RES, CHIP 0
R136	1-216-295-91	s	RES, CHIP 0
R138	1-216-295-91	s	RES, CHIP 0
R140	1-216-295-91	s	RES, CHIP 0
R145	1-216-073-00	s	METAL, CHIP 10k 5% 1/10W
R149	1-216-295-91	s	RES, CHIP 0
R150	1-216-295-91	s	RES, CHIP 0
R151	1-216-049-91	s	METAL, CHIP 1k 5% 1/10W
R152	1-216-097-91	s	METAL, CHIP 100k 5% 1/10W
R153	1-216-073-00	s	METAL, CHIP 10k 5% 1/10W
R154	1-216-097-91	s	METAL, CHIP 100k 5% 1/10W
R155	1-216-073-00	s	METAL, CHIP 10k 5% 1/10W
R156	1-216-097-91	s	METAL, CHIP 100k 5% 1/10W
R158	1-216-073-00	s	METAL, CHIP 10k 5% 1/10W
R159	1-216-295-91	s	RES, CHIP 0
R160	1-216-295-91	s	RES, CHIP 0
R173	1-216-295-91	s	RES, CHIP 0
R174	1-216-295-91	s	RES, CHIP 0
R175	1-216-295-91	s	RES, CHIP 0
R176	1-216-295-91	s	RES, CHIP 0
R177	1-216-295-91	s	RES, CHIP 0
R178	1-216-295-91	s	RES, CHIP 0
R179	1-216-025-91	s	METAL, CHIP 100 5% 1/10W
R180	1-216-029-00	s	METAL, CHIP 150 5% 1/10W
R181	1-216-025-91	s	METAL, CHIP 100 5% 1/10W
R182	1-216-017-91	s	METAL, CHIP 47 5% 1/10W
R183	1-216-017-91	s	METAL, CHIP 47 5% 1/10W
R201	1-216-085-00	s	METAL, CHIP 33k 5% 1/10W
R202	1-216-079-00	s	METAL, CHIP 18k 5% 1/10W
R203	1-216-033-00	s	METAL, CHIP 220 5% 1/10W
R204	1-216-033-00	s	METAL, CHIP 220 5% 1/10W
R205	1-216-033-00	s	METAL, CHIP 220 5% 1/10W
R206	1-216-033-00	s	METAL, CHIP 220 5% 1/10W
R207	1-216-033-00	s	METAL, CHIP 220 5% 1/10W
R208	1-216-033-00	s	METAL, CHIP 220 5% 1/10W

(SDI-28 BOARD(DSBK-120/120P))

Ref. No. or Q'ty	Part No.	SP	Description
R209	1-216-033-00	s	METAL, CHIP 220 5% 1/10W
R210	1-216-033-00	s	METAL, CHIP 220 5% 1/10W
R211	1-216-033-00	s	METAL, CHIP 220 5% 1/10W
R212	1-216-033-00	s	METAL, CHIP 220 5% 1/10W
R213	1-216-025-91	s	METAL, CHIP 100 5% 1/10W
R214	1-216-085-00	s	METAL, CHIP 33k 5% 1/10W
R215	1-216-079-00	s	METAL, CHIP 18k 5% 1/10W
R216	1-216-049-91	s	METAL, CHIP 1k 5% 1/10W
R217	1-216-073-00	s	METAL, CHIP 10k 5% 1/10W
R218	1-216-033-00	s	METAL, CHIP 220 5% 1/10W
R219	1-216-624-11	s	METAL, CHIP 75 0.5% 1/10W
R220	1-216-033-00	s	METAL, CHIP 220 5% 1/10W
R221	1-216-623-11	s	METAL, CHIP 68 0.5% 1/10W
R222	1-216-611-11	s	METAL, CHIP 22 0.5% 1/10W
R224	1-216-623-11	s	METAL, CHIP 68 0.5% 1/10W
R225	1-216-611-11	s	METAL, CHIP 22 0.5% 1/10W
R226	1-216-624-11	s	METAL, CHIP 75 0.5% 1/10W
R228	1-216-295-91	s	RES, CHIP 0
R229	1-216-029-00	s	METAL, CHIP 150 5% 1/10W
R230	1-216-029-00	s	METAL, CHIP 150 5% 1/10W
R231	1-216-625-11	s	METAL, CHIP 82 0.5% 1/10W
R232	1-216-625-11	s	METAL, CHIP 82 0.5% 1/10W
R233	1-216-623-11	s	METAL, CHIP 68 0.5% 1/10W
R234	1-216-623-11	s	METAL, CHIP 68 0.5% 1/10W
R235	1-216-073-00	s	METAL, CHIP 10k 5% 1/10W
R236	1-216-073-00	s	METAL, CHIP 10k 5% 1/10W
R237	1-216-033-00	s	METAL, CHIP 220 5% 1/10W
R238	1-216-295-91	s	RES, CHIP 0
R239	1-216-627-11	s	METAL, CHIP 100 0.5% 1/10W
R241	1-216-663-11	s	METAL, CHIP 3.3k 0.5% 1/10W
R242	1-216-295-91	s	RES, CHIP 0
R243	1-216-295-91	s	RES, CHIP 0
R244	1-216-685-11	s	METAL, CHIP 27k 0.5% 1/10W
R247	1-216-651-11	s	METAL, CHIP 1k 0.5% 1/10W
R248	1-216-675-11	s	METAL, CHIP 10k 0.5% 1/10W
R249	1-216-653-11	s	METAL, CHIP 1.2k 0.5% 1/10W
R250	1-216-651-11	s	METAL, CHIP 1k 0.5% 1/10W
R253	1-216-295-91	s	RES, CHIP 0
R254	1-216-295-91	s	RES, CHIP 0
R255	1-216-037-00	s	METAL, CHIP 330 5% 1/10W
R256	1-216-295-91	s	RES, CHIP 0
R301	1-216-089-91	s	METAL, CHIP 47k 5% 1/10W
R302	1-216-089-91	s	METAL, CHIP 47k 5% 1/10W
R303	1-216-109-00	s	METAL, CHIP 330k 5% 1/10W
R304	1-216-089-91	s	METAL, CHIP 47k 5% 1/10W
R305	1-216-049-91	s	METAL, CHIP 1k 5% 1/10W
R306	1-216-049-91	s	METAL, CHIP 1k 5% 1/10W
R307	1-216-025-91	s	METAL, CHIP 100 5% 1/10W
R308	1-216-025-91	s	METAL, CHIP 100 5% 1/10W
R309	1-216-025-91	s	METAL, CHIP 100 5% 1/10W
R310	1-216-295-91	s	RES, CHIP 0
R311	1-216-049-91	s	METAL, CHIP 1k 5% 1/10W
R312	1-216-073-00	s	METAL, CHIP 10k 5% 1/10W
R319	1-216-073-00	s	METAL, CHIP 10k 5% 1/10W
R320	1-216-089-91	s	METAL, CHIP 47k 5% 1/10W
R321	1-216-089-91	s	METAL, CHIP 47k 5% 1/10W
RB101	1-239-998-11	s	RESISTOR BLOCK, CHIP 100 x 4
RB102	1-239-998-11	s	RESISTOR BLOCK, CHIP 100 x 4

(SDI-28 BOARD(DSBK-120/120P))

Ref. No. or Q'ty	Part No.	SP	Description
RB103	1-239-998-11	s	RESISTOR BLOCK, CHIP 100 x 4
RB104	1-239-309-11	s	RESISTOR BLOCK, CHIP 100k x 8
RB105	1-239-309-11	s	RESISTOR BLOCK, CHIP 100k x 8
RB106	1-239-412-11	s	RESISTOR BLOCK, CHIP 100 x 4
RB107	1-239-412-11	s	RESISTOR BLOCK, CHIP 100 x 4
RB108	1-239-412-11	s	RESISTOR BLOCK, CHIP 100 x 4
RV201	1-241-262-11	s	RES, ADJ, METAL 2k
X301	1-579-175-11	s	RESONATOR, CERAMIC 10.00MHz

SE-315 BOARD

Ref. No. or Q'ty	Part No.	SP	Description
1pc	1-662-914-11	o	PRINTED CIRCUIT BOARD, SE-315
CN61	1-566-759-11	o	CONNECTOR 4P, MALE
IC1	8-749-012-50	s	IC HEDR-8000
R1	1-216-033-00	s	METAL, CHIP 220 5% 1/10W

SE-361 BOARD

Ref. No. or Q'ty	Part No.	SP	Description
1pc	1-662-915-11	o	PRINTED CIRCUIT BOARD, SE-361
CN61	1-566-759-11	o	CONNECTOR 4P, MALE
IC1	8-749-012-50	s	IC HEDR-8000
R1	1-216-033-00	s	METAL, CHIP 220 5% 1/10W

SV-184 BOARD

Ref. No.
or Q'ty Part No. SP Description

The parts marked * are different, depending on the product serial numbers, as shown below:

*1) Serial number; 10001 through 10430 (For DSR-80 J)
Serial number; 10001 through 10470 (For DSR-80 UC)
Serial number; 10001 through 10320 (For DSR-80P CE)
*2) Serial number; 10431 and higher (For DSR-80 J)
Serial number; 10471 and higher (For DSR-80 UC)
Serial number; 10321 and higher (For DSR-80P CE)
*3) Serial number; 10001 through 10430 (For DSR-80 J)
Serial number; 10001 through 10970 (For DSR-80 UC)
Serial number; 10001 through 10620 (For DSR-80P CE)
*4) Serial number; 10431 and higher (For DSR-80 J)
Serial number; 10971 and higher (For DSR-80 UC)
Serial number; 10621 and higher (For DSR-80P CE)
*5) Serial number; 10001 through 10530 (For DSR-80 J)
Serial number; 10001 through 11450 (For DSR-80 UC)
Serial number; 10001 through 11020 (For DSR-80P CE)
*6) Serial number; 10531 and higher (For DSR-80 J)
Serial number; 11451 and higher (For DSR-80 UC)
Serial number; 11021 and higher (For DSR-80P CE)
*7) Serial number; 10001 through 10780 (For DSR-80 J)
Serial number; 10001 through 11750 (For DSR-80 UC)
Serial number; 10001 through 11470 (For DSR-80P CE)
*8) Serial number; 10781 and higher (For DSR-80 J)
Serial number; 11751 and higher (For DSR-80 UC)
Serial number; 11471 and higher (For DSR-80P CE)
Serial number; 10001 and higher (For DSR-80P UC)

Ref. No. or Q'ty	Part No.	SP	Description
1pc	A-8312-944-A	s	MOUNTED CIRCUIT BOARD, SV-184
1pc	7-621-759-45	s	+PSW, 2.6x6
1pc	3-179-084-01	s	LEVER (R), PRINTED CIRCUIT BOARD
1pc	3-179-085-01	s	LEVER (L), PRINTED CIRCUIT BOARD
13pcs	7-621-759-65	s	+PSW, 2.6x8
1pc	1-528-749-11	s	BATTERY, LITHIUM
1pc	7-621-759-65	s	+PSW, 2.6x8
C1	1-107-909-11	s	ELECT 47uF 20% 16V
C4	1-163-809-11	s	CERAMIC, CHIP 0.047uF 10% 25V
C5	1-135-076-21	s	TANTALUM, CHIP 1uF 10% 35V
C6	1-163-275-11	s	CERAMIC, CHIP 0.001uF 5% 50V
C9	1-135-076-21	s	TANTALUM, CHIP 1uF 10% 35V
C12	1-163-037-11	s	CERAMIC, CHIP 0.022uF 10% 25V
C13	1-163-133-00	s	CERAMIC, CHIP 470pF 5% 50V
C14	1-163-037-11	s	CERAMIC, CHIP 0.022uF 10% 25V
C15	1-163-037-11	s	CERAMIC, CHIP 0.022uF 10% 25V
C16	1-163-038-91	s	CERAMIC, CHIP 0.1uF 25V
C17	1-163-091-00	s	CERAMIC, CHIP 8pF 50V
C18	1-163-091-00	s	CERAMIC, CHIP 8pF 50V
C19	1-163-275-11	s	CERAMIC, CHIP 0.001uF 5% 50V
C20	1-163-275-11	s	CERAMIC, CHIP 0.001uF 5% 50V
C21	1-163-038-91	s	CERAMIC, CHIP 0.1uF 25V
C22	1-163-038-91	s	CERAMIC, CHIP 0.1uF 25V
C23	1-163-038-91	s	CERAMIC, CHIP 0.1uF 25V
C24	1-163-038-91	s	CERAMIC, CHIP 0.1uF 25V
C25	1-163-038-91	s	CERAMIC, CHIP 0.1uF 25V
C26	1-163-038-91	s	CERAMIC, CHIP 0.1uF 25V
C27	1-163-038-91	s	CERAMIC, CHIP 0.1uF 25V
C28	1-163-038-91	s	CERAMIC, CHIP 0.1uF 25V
C29	1-163-038-91	s	CERAMIC, CHIP 0.1uF 25V
C30	1-163-038-91	s	CERAMIC, CHIP 0.1uF 25V
C31	1-163-038-91	s	CERAMIC, CHIP 0.1uF 25V
C32	1-163-038-91	s	CERAMIC, CHIP 0.1uF 25V
C33	1-163-038-91	s	CERAMIC, CHIP 0.1uF 25V

(SV-184 BOARD)

Ref. No. or Q'ty	Part No.	SP	Description	
C34	1-163-038-91	s	CERAMIC, CHIP 0.1uF 25V	
C35	1-163-038-91	s	CERAMIC, CHIP 0.1uF 25V	
C36	1-163-038-91	s	CERAMIC, CHIP 0.1uF 25V	
C37	1-163-038-91	s	CERAMIC, CHIP 0.1uF 25V	
C38	1-163-038-91	s	CERAMIC, CHIP 0.1uF 25V	
C39	1-163-038-91	s	CERAMIC, CHIP 0.1uF 25V	
C40	1-163-038-91	s	CERAMIC, CHIP 0.1uF 25V	
C41	1-163-038-91	s	CERAMIC, CHIP 0.1uF 25V	
C42	1-163-038-91	s	CERAMIC, CHIP 0.1uF 25V	
C101	1-163-038-91	s	CERAMIC, CHIP 0.1uF 25V	
C102	1-163-227-11	s	CERAMIC, CHIP 10pF 5% 50V	
C103	1-163-227-11	s	CERAMIC, CHIP 10pF 5% 50V	
C104	1-163-037-11	s	CERAMIC, CHIP 0.022uF 10% 25V	
C105	1-163-037-11	s	CERAMIC, CHIP 0.022uF 10% 25V	
C106	1-164-695-11	s	CERAMIC, CHIP 0.0022uF 5% 50V	
C107	1-163-037-11	s	CERAMIC, CHIP 0.022uF 10% 25V	
C108	1-163-037-11	s	CERAMIC, CHIP 0.022uF 10% 25V	
C109	1-163-038-91	s	CERAMIC, CHIP 0.1uF 25V	
C110	1-163-038-91	s	CERAMIC, CHIP 0.1uF 25V	
C111	1-163-038-91	s	CERAMIC, CHIP 0.1uF 25V	
C112	1-163-038-91	s	CERAMIC, CHIP 0.1uF 25V	
C114	1-163-038-91	s	CERAMIC, CHIP 0.1uF 25V	
C115	1-163-038-91	s	CERAMIC, CHIP 0.1uF 25V	
C116	1-163-038-91	s	CERAMIC, CHIP 0.1uF 25V	
C119	1-163-133-00	s	CERAMIC, CHIP 470pF 5% 50V	*1)
	1-163-259-91	s	CERAMIC, CHIP 220pF 5% 50V	*2)
C120	1-163-133-00	s	CERAMIC, CHIP 470pF 5% 50V	*1)
	1-163-259-91	s	CERAMIC, CHIP 220pF 5% 50V	*2)
C121	1-163-259-91	s	CERAMIC, CHIP 220pF 5% 50V	*2)
C122	1-163-259-91	s	CERAMIC, CHIP 220pF 5% 50V	*2)
C201	1-163-275-11	s	CERAMIC, CHIP 0.001uF 5% 50V	
C202	1-163-275-11	s	CERAMIC, CHIP 0.001uF 5% 50V	
C205	1-163-275-11	s	CERAMIC, CHIP 0.001uF 5% 50V	
C206	1-163-275-11	s	CERAMIC, CHIP 0.001uF 5% 50V	
C207	1-163-275-11	s	CERAMIC, CHIP 0.001uF 5% 50V	
C208	1-163-275-11	s	CERAMIC, CHIP 0.001uF 5% 50V	
C209	1-163-275-11	s	CERAMIC, CHIP 0.001uF 5% 50V	
C210	1-163-275-11	s	CERAMIC, CHIP 0.001uF 5% 50V	
C211	1-163-275-11	s	CERAMIC, CHIP 0.001uF 5% 50V	*1)
C212	1-163-133-00	s	CERAMIC, CHIP 470pF 5% 50V	
C213	1-163-224-11	s	CERAMIC, CHIP 7pF 0.25pF 50V	
C214	1-163-224-11	s	CERAMIC, CHIP 7pF 0.25pF 50V	
C215	1-163-275-11	s	CERAMIC, CHIP 0.001uF 5% 50V	*1)
C216	1-163-038-91	s	CERAMIC, CHIP 0.1uF 25V	
C217	1-107-909-11	s	ELECT 47uF 20% 16V	
C218	1-107-909-11	s	ELECT 47uF 20% 16V	
C219	1-163-037-11	s	CERAMIC, CHIP 0.022uF 10% 25V	
C220	1-163-021-91	s	CERAMIC, CHIP 0.01uF 10% 50V	
C221	1-163-021-91	s	CERAMIC, CHIP 0.01uF 10% 50V	
C222	1-163-275-11	s	CERAMIC, CHIP 0.001uF 5% 50V	
C223	1-163-275-11	s	CERAMIC, CHIP 0.001uF 5% 50V	
C225	1-163-021-91	s	CERAMIC, CHIP 0.01uF 10% 50V	
C226	1-163-275-11	s	CERAMIC, CHIP 0.001uF 5% 50V	
C227	1-163-038-91	s	CERAMIC, CHIP 0.1uF 25V	
C228	1-163-038-91	s	CERAMIC, CHIP 0.1uF 25V	
C229	1-163-038-91	s	CERAMIC, CHIP 0.1uF 25V	
C230	1-163-038-91	s	CERAMIC, CHIP 0.1uF 25V	

(SV-184 BOARD)

Ref. No. or Q'ty	Part No.	SP	Description
C231	1-163-038-91	s	CERAMIC, CHIP 0.1uF 25V
C232	1-163-038-91	s	CERAMIC, CHIP 0.1uF 25V
C233	1-163-038-91	s	CERAMIC, CHIP 0.1uF 25V
C234	1-163-038-91	s	CERAMIC, CHIP 0.1uF 25V
C235	1-163-038-91	s	CERAMIC, CHIP 0.1uF 25V
C236	1-163-037-11	s	CERAMIC, CHIP 0.022uF 10% 25V
C307	1-163-038-91	s	CERAMIC, CHIP 0.1uF 25V
C313	1-163-038-91	s	CERAMIC, CHIP 0.1uF 25V
C314	1-163-275-11	s	CERAMIC, CHIP 0.001uF 5% 50V
C315	1-163-275-11	s	CERAMIC, CHIP 0.001uF 5% 50V
C316	1-163-275-11	s	CERAMIC, CHIP 0.001uF 5% 50V
C317	1-163-809-11	s	CERAMIC, CHIP 0.047uF 10% 25V
C318	1-163-275-11	s	CERAMIC, CHIP 0.001uF 5% 50V
C319	1-163-275-11	s	CERAMIC, CHIP 0.001uF 5% 50V
C320	1-163-021-91	s	CERAMIC, CHIP 0.01uF 10% 50V
C321	1-163-021-91	s	CERAMIC, CHIP 0.01uF 10% 50V
C322	1-130-489-00	s	MYLAR 0.033uF 5% 50V
C323	1-163-037-11	s	CERAMIC, CHIP 0.022uF 10% 25V
C324	1-164-695-11	s	CERAMIC, CHIP 0.0022uF 5% 50V
C325	1-163-243-11	s	CERAMIC, CHIP 47pF 5% 50V
C326	1-163-038-91	s	CERAMIC, CHIP 0.1uF 25V
C327	1-163-038-91	s	CERAMIC, CHIP 0.1uF 25V
C328	1-163-243-11	s	CERAMIC, CHIP 47pF 5% 50V
C329	1-164-695-11	s	CERAMIC, CHIP 0.0022uF 5% 50V
C330	1-164-695-11	s	CERAMIC, CHIP 0.0022uF 5% 50V
C331	1-163-037-11	s	CERAMIC, CHIP 0.022uF 10% 25V
C332	1-163-037-11	s	CERAMIC, CHIP 0.022uF 10% 25V
C333	1-163-251-11	s	CERAMIC, CHIP 100pF 5% 50V
C334	1-163-251-11	s	CERAMIC, CHIP 100pF 5% 50V
C335	1-163-037-11	s	CERAMIC, CHIP 0.022uF 10% 25V
C336	1-163-037-11	s	CERAMIC, CHIP 0.022uF 10% 25V
C337	1-107-907-11	s	ELECT 22uF 20% 25V
C338	1-107-907-11	s	ELECT 22uF 20% 25V
C339	1-107-907-11	s	ELECT 22uF 20% 25V
C340	1-107-907-11	s	ELECT 22uF 20% 25V
C341	1-107-907-11	s	ELECT 22uF 20% 25V
C342	1-107-907-11	s	ELECT 22uF 20% 25V
C343	1-107-907-11	s	ELECT 22uF 20% 25V
C344	1-107-907-11	s	ELECT 22uF 20% 25V
C345	1-130-489-00	s	MYLAR 0.033uF 5% 50V
C346	1-130-489-00	s	MYLAR 0.033uF 5% 50V
C347	1-130-489-00	s	MYLAR 0.033uF 5% 50V
C348	1-130-489-00	s	MYLAR 0.033uF 5% 50V
C349	1-163-021-91	s	CERAMIC, CHIP 0.01uF 10% 50V
C350	1-163-021-91	s	CERAMIC, CHIP 0.01uF 10% 50V
C351	1-163-021-91	s	CERAMIC, CHIP 0.01uF 10% 50V
C352	1-163-021-91	s	CERAMIC, CHIP 0.01uF 10% 50V
C353	1-163-038-91	s	CERAMIC, CHIP 0.1uF 25V
C354	1-163-038-91	s	CERAMIC, CHIP 0.1uF 25V
C355	1-163-243-11	s	CERAMIC, CHIP 47pF 5% 50V
C356	1-163-243-11	s	CERAMIC, CHIP 47pF 5% 50V
C357	1-163-243-11	s	CERAMIC, CHIP 47pF 5% 50V
C358	1-163-243-11	s	CERAMIC, CHIP 47pF 5% 50V
C359	1-163-243-11	s	CERAMIC, CHIP 47pF 5% 50V
C360	1-163-243-11	s	CERAMIC, CHIP 47pF 5% 50V
C361	1-163-243-11	s	CERAMIC, CHIP 47pF 5% 50V
C362	1-163-243-11	s	CERAMIC, CHIP 47pF 5% 50V
C363	1-163-038-91	s	CERAMIC, CHIP 0.1uF 25V
C364	1-163-038-91	s	CERAMIC, CHIP 0.1uF 25V

(SV-184 BOARD)

Ref. No. or Q'ty	Part No.	SP	Description
C365	1-163-243-11	s	CERAMIC, CHIP 47pF 5% 50V
C366	1-163-243-11	s	CERAMIC, CHIP 47pF 5% 50V
C367	1-163-243-11	s	CERAMIC, CHIP 47pF 5% 50V
C368	1-163-243-11	s	CERAMIC, CHIP 47pF 5% 50V
C369	1-163-038-91	s	CERAMIC, CHIP 0.1uF 25V
C370	1-163-037-11	s	CERAMIC, CHIP 0.022uF 10% 25V
C371	1-163-037-11	s	CERAMIC, CHIP 0.022uF 10% 25V
C372	1-107-906-11	s	ELECT 10uF 20% 50V
C373	1-107-906-11	s	ELECT 10uF 20% 50V
C374	1-163-133-00	s	CERAMIC, CHIP 470pF 5% 50V
C375	1-163-133-00	s	CERAMIC, CHIP 470pF 5% 50V
C376	1-163-038-91	s	CERAMIC, CHIP 0.1uF 25V
C377	1-107-906-11	s	ELECT 10uF 20% 50V
C378	1-107-906-11	s	ELECT 10uF 20% 50V
C379	1-107-906-11	s	ELECT 10uF 20% 50V
C380	1-163-021-91	s	CERAMIC, CHIP 0.01uF 10% 50V
C381	1-163-038-91	s	CERAMIC, CHIP 0.1uF 25V
C382	1-128-526-11	s	ELECT 100uF 20% 16V
C383	1-163-038-91	s	CERAMIC, CHIP 0.1uF 25V
C384	1-163-038-91	s	CERAMIC, CHIP 0.1uF 25V
C385	1-163-038-91	s	CERAMIC, CHIP 0.1uF 25V
C386	1-163-038-91	s	CERAMIC, CHIP 0.1uF 25V
C387	1-163-038-91	s	CERAMIC, CHIP 0.1uF 25V
C388	1-163-038-91	s	CERAMIC, CHIP 0.1uF 25V
C392	1-163-038-91	s	CERAMIC, CHIP 0.1uF 25V
C397	1-163-038-91	s	CERAMIC, CHIP 0.1uF 25V
C398	1-163-038-91	s	CERAMIC, CHIP 0.1uF 25V
C399	1-163-038-91	s	CERAMIC, CHIP 0.1uF 25V
C400	1-163-038-91	s	CERAMIC, CHIP 0.1uF 25V
C401	1-163-038-91	s	CERAMIC, CHIP 0.1uF 25V
C402	1-163-038-91	s	CERAMIC, CHIP 0.1uF 25V
C403	1-163-038-91	s	CERAMIC, CHIP 0.1uF 25V
C404	1-163-038-91	s	CERAMIC, CHIP 0.1uF 25V
C405	1-163-038-91	s	CERAMIC, CHIP 0.1uF 25V
C406	1-163-038-91	s	CERAMIC, CHIP 0.1uF 25V
C407	1-163-038-91	s	CERAMIC, CHIP 0.1uF 25V
C408	1-107-909-11	s	ELECT 47uF 20% 16V
C409	1-128-526-11	s	ELECT 100uF 20% 16V
C410	1-107-909-11	s	ELECT 47uF 20% 16V
C411	1-163-038-91	s	CERAMIC, CHIP 0.1uF 25V
C412	1-163-038-91	s	CERAMIC, CHIP 0.1uF 25V
C413	1-163-038-91	s	CERAMIC, CHIP 0.1uF 25V
C414	1-163-038-91	s	CERAMIC, CHIP 0.1uF 25V
C415	1-163-038-91	s	CERAMIC, CHIP 0.1uF 25V
C416	1-163-038-91	s	CERAMIC, CHIP 0.1uF 25V
C417	1-128-526-11	s	ELECT 100uF 20% 16V
C418	1-128-526-11	s	ELECT 100uF 20% 16V
C419	1-128-526-11	s	ELECT 100uF 20% 16V
C420	1-163-038-91	s	CERAMIC, CHIP 0.1uF 25V
C421	1-163-038-91	s	CERAMIC, CHIP 0.1uF 25V
C422	1-163-038-91	s	CERAMIC, CHIP 0.1uF 25V
C423	1-163-038-91	s	CERAMIC, CHIP 0.1uF 25V
C424	1-163-038-91	s	CERAMIC, CHIP 0.1uF 25V
C425	1-107-909-11	s	ELECT 47uF 20% 16V
C426	1-163-251-11	s	CERAMIC, CHIP 100pF 5% 50V
C427	1-163-251-11	s	CERAMIC, CHIP 100pF 5% 50V
C437	1-163-251-11	s	CERAMIC, CHIP 100pF 5% 50V
C438	1-163-251-11	s	CERAMIC, CHIP 100pF 5% 50V
C439	1-104-760-11	s	CERAMIC, CHIP 0.047uF 10% 50V

(SV-184 BOARD)

Ref. No. or Q'ty	Part No.	SP	Description
C441	1-163-038-91	s	CERAMIC, CHIP 0.1uF 25V
C442	1-163-038-91	s	CERAMIC, CHIP 0.1uF 25V
C443	1-163-038-91	s	CERAMIC, CHIP 0.1uF 25V
C444	1-163-038-91	s	CERAMIC, CHIP 0.1uF 25V
C445	1-163-038-91	s	CERAMIC, CHIP 0.1uF 25V
CN1	1-506-484-11	s	CONNECTOR, 5P, MALE
CN2	1-506-481-11	s	CONNECTOR, 2P, MALE
CNI5	1-526-660-21	o	SOCKET, IC 32P
CNI6	1-526-660-21	o	SOCKET, IC 32P
D1	8-719-941-86	s	DIODE DAN202U
D2	8-719-941-09	s	DIODE DAP202U
D3	8-719-941-86	s	DIODE DAN202U
D4	8-719-941-09	s	DIODE DAP202U
D5	8-719-941-86	s	DIODE DAN202U
D6	8-719-941-09	s	DIODE DAP202U
D7	8-719-941-86	s	DIODE DAN202U
D8	8-719-941-09	s	DIODE DAP202U
D13	8-719-941-86	s	DIODE DAN202U
D14	8-719-941-09	s	DIODE DAP202U
D15	8-719-941-23	s	DIODE DA204U
D201	8-719-941-86	s	DIODE DAN202U
D202	8-719-941-09	s	DIODE DAP202U
D205	8-719-941-86	s	DIODE DAN202U
D206	8-719-941-09	s	DIODE DAP202U
D207	8-719-941-86	s	DIODE DAN202U
D208	8-719-941-09	s	DIODE DAP202U
D209	8-719-941-86	s	DIODE DAN202U
D210	8-719-941-09	s	DIODE DAP202U
D303	8-719-800-76	s	DIODE 1SS226
D304	8-719-800-76	s	DIODE 1SS226
D305	8-719-200-02	s	DIODE 10E-2
D306	8-719-200-02	s	DIODE 10E-2
D307	8-719-200-02	s	DIODE 10E-2
D308	8-719-200-02	s	DIODE 10E-2
D309	8-719-200-02	s	DIODE 10E-2
D310	8-719-200-02	s	DIODE 10E-2
D311	8-719-800-76	s	DIODE 1SS226
E1	1-535-881-21	o	TERMINAL, TP
E2	1-535-881-21	o	TERMINAL, TP
E3	1-535-881-21	o	TERMINAL, TP
FB301	1-414-581-21	s	FILTER, NOISE, CHIP
FL1	1-233-674-21	s	FILTER BLOCK, NOISE, CHIP
FL2	1-233-674-21	s	FILTER BLOCK, NOISE, CHIP
FL3	1-233-674-21	s	FILTER BLOCK, NOISE, CHIP
FL4	1-233-314-11	s	FILTER, NOISE, CHIP
FL5	1-233-314-11	s	FILTER, NOISE, CHIP
IC1	8-759-348-69	s	IC HD6415108RF10
IC2	8-759-254-78	s	IC CY7C185-25VC
IC3	8-759-254-78	s	IC CY7C185-25VC
IC4	8-759-399-65	s	IC M48Z58Y-70MH1TR
IC5	8-759-539-81	o	IC M27C1001-10F1-80SV5-V1.33
IC6	8-759-539-82	o	IC M27C1001-10F1-80SV6-V1.33
IC7	8-759-185-69	s	IC TC74VHC27F(EL)
IC8	8-759-186-29	s	IC TC74VHC11F
IC9	8-759-186-47	s	IC TC74VHC138F(EL)
IC10	8-759-186-47	s	IC TC74VHC138F(EL)

(SV-184 BOARD)

Ref. No. or Q'ty	Part No.	SP	Description
IC11	8-759-186-32	s	IC TC74VHC21F
IC12	8-759-081-42	s	IC TC74VHC00F
IC13	8-759-186-38	s	IC TC74VHC32F(EL)
IC14	8-759-925-76	s	IC SN74HC08NS
IC15	8-759-081-44	s	IC TC74VHC04F
IC16	8-759-369-92	s	IC M51958AFP600D
IC17	8-759-009-05	s	IC MC14051BF
IC18	8-759-186-63	s	IC TC74VHC245F(EL)
IC19	8-759-186-63	s	IC TC74VHC245F(EL)
IC21	8-759-510-71	s	IC UPC358G2-E2
IC23	8-759-186-63	s	IC TC74VHC245F(EL)
IC101	8-752-343-05	s	IC CXD2202Q
IC102	8-759-700-07	s	IC NJM2903M
IC103	8-759-927-12	s	IC SN74HCT244ANS
IC104	8-759-925-76	s	IC SN74HC08NS
IC105	8-759-100-95	s	IC UPC324G2
IC106	8-759-175-56	s	IC CXD8804Q
IC107	8-759-053-58	s	IC IDT6116SA25S0
IC201	8-752-892-26	s	IC CXP912P032Q-3-027
IC202	8-759-186-77	s	IC TC74VHC541F
IC203	8-759-186-77	s	IC TC74VHC541F
IC204	8-759-186-77	s	IC TC74VHC541F
IC205	8-759-186-77	s	IC TC74VHC541F
IC206	8-759-927-12	s	IC SN74HCT244ANS
IC207	8-759-100-95	s	IC UPC324G2
IC208	8-759-600-34	s	IC M54532P
IC209	8-759-009-07	s	IC MC14053BF
IC210	8-759-368-51	s	IC M54523FP
IC302	8-759-106-02	s	IC UPC4570G2
IC303	8-759-700-07	s	IC NJM2903M
IC304	8-759-141-05	s	IC UPC4574G2
IC306	8-759-009-07	s	IC MC14053BF
IC308	8-759-106-02	s	IC UPC4570G2
IC309	8-759-239-23	s	IC SN74HC86NS
IC310	8-759-055-82	s	IC M62353GP
IC311	8-759-100-95	s	IC UPC324G2
IC312	8-759-141-05	s	IC UPC4574G2
IC313	8-759-141-05	s	IC UPC4574G2
IC314	8-759-141-05	s	IC UPC4574G2
IC315	8-759-700-07	s	IC NJM2903M
IC316	8-759-106-02	s	IC UPC4570G2
IC317	8-759-106-02	s	IC UPC4570G2
IC318	8-759-182-84	s	IC PQ05SZ5U
IC319	8-759-205-56	s	IC TA7267P
IC320	8-759-205-56	s	IC TA7267P
IC321	8-759-205-56	s	IC TA7267P
IC323	8-759-106-02	s	IC UPC4570G2
IC324	8-759-100-95	s	IC UPC324G2
L302	1-412-533-21	s	INDUCTOR 47uH
L303	1-412-533-21	s	INDUCTOR 47uH
L304	1-412-533-21	s	INDUCTOR 47uH
L305	1-412-533-21	s	INDUCTOR 47uH
PS302	⚠ 1-532-679-00	s	LINK, IC 0.6A
PS303	⚠ 1-532-679-00	s	LINK, IC 0.6A
PS304	⚠ 1-532-679-00	s	LINK, IC 0.6A
PS305	⚠ 1-532-679-00	s	LINK, IC 0.6A
PS306	⚠ 1-532-675-21	s	LINK, IC 1.5A
PS307	⚠ 1-532-679-00	s	LINK, IC 0.6A

(SV-184 BOARD)

Ref. No. or Q'ty	Part No.	SP	Description
PS308	⚠ 1-532-675-21	s	LINK, IC 1.5A
PS309	⚠ 1-532-675-21	s	LINK, IC 1.5A
PS310	⚠ 1-532-675-21	s	LINK, IC 1.5A
PS311	⚠ 1-532-675-21	s	LINK, IC 1.5A
Q1	8-729-216-22	s	TRANSISTOR 2SA1162
Q2	8-729-028-91	s	TRANSISTOR DTA144EUA-T106
Q3	8-729-028-91	s	TRANSISTOR DTA144EUA-T106
Q201	8-729-120-28	s	TRANSISTOR 2SC1623-L5L6
Q202	8-729-120-28	s	TRANSISTOR 2SC1623-L5L6
Q203	8-729-120-28	s	TRANSISTOR 2SC1623-L5L6
Q204	8-729-216-22	s	TRANSISTOR 2SA1162
Q205	8-729-120-28	s	TRANSISTOR 2SC1623-L5L6
Q301	8-729-029-14	s	TRANSISTOR DTC144EUA-T106
Q302	8-729-265-52	s	TRANSISTOR 2SC2655-Y
Q303	8-729-021-83	s	TRANSISTOR 2SA1020-Y
Q304	8-729-400-12	s	TRANSISTOR 2SB941-P
Q305	8-729-209-06	s	TRANSISTOR 2SC4213A-TE85L
Q306	8-729-209-06	s	TRANSISTOR 2SC4213A-TE85L
Q307	8-729-265-52	s	TRANSISTOR 2SC2655-Y
Q308	8-729-021-83	s	TRANSISTOR 2SA1020-Y
Q309	8-729-265-52	s	TRANSISTOR 2SC2655-Y
Q310	8-729-021-83	s	TRANSISTOR 2SA1020-Y
Q311	8-729-112-61	s	TRANSISTOR 2SA1441
Q312	8-729-141-18	s	TRANSISTOR 2SC3692
Q313	8-729-102-14	s	TRANSISTOR 2SD1021-F
Q314	8-729-205-02	s	TRANSISTOR 2SA1150-Y
Q315	8-729-112-61	s	TRANSISTOR 2SA1441
Q316	8-729-141-18	s	TRANSISTOR 2SC3692
Q317	8-729-102-14	s	TRANSISTOR 2SD1021-F
Q318	8-729-205-02	s	TRANSISTOR 2SA1150-Y
Q319	8-729-112-61	s	TRANSISTOR 2SA1441
Q320	8-729-141-18	s	TRANSISTOR 2SC3692
Q321	8-729-112-61	s	TRANSISTOR 2SA1441
Q322	8-729-141-18	s	TRANSISTOR 2SC3692
Q323	8-729-265-52	s	TRANSISTOR 2SC2655-Y
Q324	8-729-141-83	s	TRANSISTOR 2SB1094-LK
Q325	8-729-265-52	s	TRANSISTOR 2SC2655-Y
Q326	8-729-400-12	s	TRANSISTOR 2SB941-P
Q327	8-729-021-83	s	TRANSISTOR 2SA1020-Y
Q328	8-729-029-14	s	TRANSISTOR DTC144EUA-T106
Q329	8-729-029-14	s	TRANSISTOR DTC144EUA-T106
R1	1-216-089-91	s	METAL, CHIP 47k 5% 1/10W
R3	1-216-675-11	s	METAL, CHIP 10k 0.5% 1/10W
R5	1-216-675-11	s	METAL, CHIP 10k 0.5% 1/10W
R6	1-216-683-11	s	METAL, CHIP 22k 0.5% 1/10W
R7	1-216-675-11	s	METAL, CHIP 10k 0.5% 1/10W
R8	1-216-687-11	s	METAL, CHIP 33k 0.5% 1/10W
R9	1-216-699-11	s	METAL, CHIP 100k 0.5% 1/10W
R10	1-216-699-11	s	METAL, CHIP 100k 0.5% 1/10W
R11	1-216-089-91	s	METAL, CHIP 47k 5% 1/10W
R12	1-216-025-91	s	METAL, CHIP 100 5% 1/10W
R13	1-216-025-91	s	METAL, CHIP 100 5% 1/10W
R17	1-216-683-11	s	METAL, CHIP 22k 0.5% 1/10W
R18	1-218-764-11	s	METAL, CHIP 330k 0.5% 1/10W
R19	1-216-073-00	s	METAL, CHIP 10k 5% 1/10W
R20	1-216-073-00	s	METAL, CHIP 10k 5% 1/10W
R21	1-216-073-00	s	METAL, CHIP 10k 5% 1/10W
R22	1-216-073-00	s	METAL, CHIP 10k 5% 1/10W

(SV-184 BOARD)

Ref. No. or Q'ty	Part No.	SP	Description	
R23	1-216-073-00	s	METAL, CHIP 10k 5% 1/10W	
R24	1-216-073-00	s	METAL, CHIP 10k 5% 1/10W	
R25	1-216-073-00	s	METAL, CHIP 10k 5% 1/10W	
R26	1-216-073-00	s	METAL, CHIP 10k 5% 1/10W	
R29	1-216-089-91	s	METAL, CHIP 47k 5% 1/10W	
R31	1-216-073-00	s	METAL, CHIP 10k 5% 1/10W	
R32	1-216-073-00	s	METAL, CHIP 10k 5% 1/10W	
R33	1-216-073-00	s	METAL, CHIP 10k 5% 1/10W	
R37	1-216-689-11	s	METAL, CHIP 39k 0.5% 1/10W	
R38	1-216-680-11	s	METAL, CHIP 16k 0.5% 1/10W	
R39	1-216-073-00	s	METAL, CHIP 10k 5% 1/10W	
R40	1-216-089-91	s	METAL, CHIP 47k 5% 1/10W	
R42	1-216-049-91	s	METAL, CHIP 1k 5% 1/10W	*1)
R43	1-216-049-91	s	METAL, CHIP 1k 5% 1/10W	*1)
R44	1-216-049-91	s	METAL, CHIP 1k 5% 1/10W	*1)
R45	1-216-049-91	s	METAL, CHIP 1k 5% 1/10W	*1)
R46	1-216-049-91	s	METAL, CHIP 1k 5% 1/10W	
R48	1-216-089-91	s	METAL, CHIP 47k 5% 1/10W	
R49	1-216-049-91	s	METAL, CHIP 1k 5% 1/10W	
R50	1-216-089-91	s	METAL, CHIP 47k 5% 1/10W	
R51	1-216-295-91	s	RES, CHIP 0	
R52	1-216-073-00	s	METAL, CHIP 10k 5% 1/10W	
R54	1-216-089-91	s	METAL, CHIP 47k 5% 1/10W	
R55	1-216-089-91	s	METAL, CHIP 47k 5% 1/10W	
R56	1-216-049-91	s	METAL, CHIP 1k 5% 1/10W	
R57	1-216-049-91	s	METAL, CHIP 1k 5% 1/10W	
R58	1-216-089-91	s	METAL, CHIP 47k 5% 1/10W	
R59	1-216-089-91	s	METAL, CHIP 47k 5% 1/10W	
R60	1-216-089-91	s	METAL, CHIP 47k 5% 1/10W	
R61	1-216-089-91	s	METAL, CHIP 47k 5% 1/10W	
R62	1-216-073-00	s	METAL, CHIP 10k 5% 1/10W	
R63	1-216-295-91	s	RES, CHIP 0	
R64	1-216-073-00	s	METAL, CHIP 10k 5% 1/10W	
R65	1-216-295-91	s	RES, CHIP 0	
R68	1-216-049-91	s	METAL, CHIP 1k 5% 1/10W	
R69	1-216-073-00	s	METAL, CHIP 10k 5% 1/10W	
R70	1-216-626-11	s	METAL, CHIP 91 0.5% 1/10W	*5)
	1-216-635-11	s	METAL, CHIP 220 0.5% 1/10W	*6)
R71	1-216-097-91	s	METAL, CHIP 100k 5% 1/10W	
R72	1-216-049-91	s	METAL, CHIP 1k 5% 1/10W	
R73	1-216-049-91	s	METAL, CHIP 1k 5% 1/10W	
R75	1-216-089-91	s	METAL, CHIP 47k 5% 1/10W	
R76	1-216-089-91	s	METAL, CHIP 47k 5% 1/10W	
R77	1-216-089-91	s	METAL, CHIP 47k 5% 1/10W	
R78	1-216-073-00	s	METAL, CHIP 10k 5% 1/10W	
R79	1-216-049-91	s	METAL, CHIP 1k 5% 1/10W	
R80	1-216-073-00	s	METAL, CHIP 10k 5% 1/10W	
R81	1-216-049-91	s	METAL, CHIP 1k 5% 1/10W	
R82	1-216-073-00	s	METAL, CHIP 10k 5% 1/10W	
R83	1-216-073-00	s	METAL, CHIP 10k 5% 1/10W	
R84	1-216-073-00	s	METAL, CHIP 10k 5% 1/10W	
R85	1-216-073-00	s	METAL, CHIP 10k 5% 1/10W	
R86	1-216-295-91	s	RES, CHIP 0	
R87	1-216-073-00	s	METAL, CHIP 10k 5% 1/10W	
R88	1-216-073-00	s	METAL, CHIP 10k 5% 1/10W	
R89	1-216-049-91	s	METAL, CHIP 1k 5% 1/10W	
R90	1-216-049-91	s	METAL, CHIP 1k 5% 1/10W	
R91	1-216-049-91	s	METAL, CHIP 1k 5% 1/10W	

(SV-184 BOARD)

Ref. No. or Q'ty	Part No.	SP	Description	
R92	1-216-049-91	s	METAL, CHIP 1k 5% 1/10W	
R93	1-216-049-91	s	METAL, CHIP 1k 5% 1/10W	
R94	1-216-295-91	s	RES, CHIP 0	
R95	1-216-073-00	s	METAL, CHIP 10k 5% 1/10W	
R101	1-216-295-91	s	RES, CHIP 0	*1)
	1-216-033-00	s	METAL, CHIP 220 5% 1/10W	*2)
R102	1-216-295-91	s	RES, CHIP 0	*1)
	1-216-033-00	s	METAL, CHIP 220 5% 1/10W	*2)
R103	1-216-073-00	s	METAL, CHIP 10k 5% 1/10W	
R104	1-216-073-00	s	METAL, CHIP 10k 5% 1/10W	
R105	1-216-073-00	s	METAL, CHIP 10k 5% 1/10W	
R106	1-216-073-00	s	METAL, CHIP 10k 5% 1/10W	
R107	1-216-073-00	s	METAL, CHIP 10k 5% 1/10W	
R108	1-216-073-00	s	METAL, CHIP 10k 5% 1/10W	
R109	1-216-073-00	s	METAL, CHIP 10k 5% 1/10W	
R110	1-216-097-91	s	METAL, CHIP 100k 5% 1/10W	
R111	1-216-049-91	s	METAL, CHIP 1k 5% 1/10W	
R112	1-216-073-00	s	METAL, CHIP 10k 5% 1/10W	
R113	1-216-073-00	s	METAL, CHIP 10k 5% 1/10W	
R114	1-216-089-91	s	METAL, CHIP 47k 5% 1/10W	*1)
R115	1-216-049-91	s	METAL, CHIP 1k 5% 1/10W	
R116	1-216-057-00	s	METAL, CHIP 2.2k 5% 1/10W	
R117	1-216-073-00	s	METAL, CHIP 10k 5% 1/10W	
R118	1-216-073-00	s	METAL, CHIP 10k 5% 1/10W	
R119	1-216-089-91	s	METAL, CHIP 47k 5% 1/10W	*1)
R120	1-216-073-00	s	METAL, CHIP 10k 5% 1/10W	
R121	1-216-073-00	s	METAL, CHIP 10k 5% 1/10W	
R122	1-216-089-91	s	METAL, CHIP 47k 5% 1/10W	*1)
R123	1-216-089-91	s	METAL, CHIP 47k 5% 1/10W	*1)
R124	1-216-049-91	s	METAL, CHIP 1k 5% 1/10W	
R125	1-216-049-91	s	METAL, CHIP 1k 5% 1/10W	
R126	1-216-049-91	s	METAL, CHIP 1k 5% 1/10W	
R127	1-216-049-91	s	METAL, CHIP 1k 5% 1/10W	
R128	1-216-089-91	s	METAL, CHIP 47k 5% 1/10W	*1)
R129	1-216-089-91	s	METAL, CHIP 47k 5% 1/10W	*1)
R130	1-216-073-00	s	METAL, CHIP 10k 5% 1/10W	
R135	1-216-049-91	s	METAL, CHIP 1k 5% 1/10W	
R136	1-216-049-91	s	METAL, CHIP 1k 5% 1/10W	
R137	1-216-049-91	s	METAL, CHIP 1k 5% 1/10W	
R138	1-216-049-91	s	METAL, CHIP 1k 5% 1/10W	
R139	1-216-049-91	s	METAL, CHIP 1k 5% 1/10W	
R140	1-216-049-91	s	METAL, CHIP 1k 5% 1/10W	
R141	1-216-049-91	s	METAL, CHIP 1k 5% 1/10W	
R142	1-216-049-91	s	METAL, CHIP 1k 5% 1/10W	
R143	1-216-073-00	s	METAL, CHIP 10k 5% 1/10W	
R144	1-216-073-00	s	METAL, CHIP 10k 5% 1/10W	
R145	1-216-073-00	s	METAL, CHIP 10k 5% 1/10W	
R146	1-216-049-91	s	METAL, CHIP 1k 5% 1/10W	
R147	1-216-295-91	s	RES, CHIP 0	
R148	1-216-049-91	s	METAL, CHIP 1k 5% 1/10W	
R149	1-216-037-00	s	METAL, CHIP 330 5% 1/10W	
R150	1-216-049-91	s	METAL, CHIP 1k 5% 1/10W	
R151	1-216-049-91	s	METAL, CHIP 1k 5% 1/10W	
R152	1-216-073-00	s	METAL, CHIP 10k 5% 1/10W	
R153	1-216-089-91	s	METAL, CHIP 47k 5% 1/10W	
R154	1-216-089-91	s	METAL, CHIP 47k 5% 1/10W	
R155	1-216-089-91	s	METAL, CHIP 47k 5% 1/10W	

(SV-184 BOARD)

Ref. No. or Q'ty	Part No.	SP	Description	
R156	1-216-089-91	s	METAL, CHIP 47k 5% 1/10W	
R157	1-216-049-91	s	METAL, CHIP 1k 5% 1/10W	
R158	1-216-089-91	s	METAL, CHIP 47k 5% 1/10W	
R159	1-216-081-00	s	METAL, CHIP 22k 5% 1/10W	
R160	1-216-085-00	s	METAL, CHIP 33k 5% 1/10W	
R161	1-216-089-91	s	METAL, CHIP 47k 5% 1/10W	
R162	1-216-109-00	s	METAL, CHIP 330k 5% 1/10W	
R163	1-216-089-91	s	METAL, CHIP 47k 5% 1/10W	
R164	1-216-081-00	s	METAL, CHIP 22k 5% 1/10W	
R165	1-216-089-91	s	METAL, CHIP 47k 5% 1/10W	
R166	1-216-081-00	s	METAL, CHIP 22k 5% 1/10W	
R167	1-216-049-91	s	METAL, CHIP 1k 5% 1/10W	
R168	1-216-089-91	s	METAL, CHIP 47k 5% 1/10W	
R169	1-216-049-91	s	METAL, CHIP 1k 5% 1/10W	
R170	1-216-025-91	s	METAL, CHIP 100 5% 1/10W	
R171	1-216-089-91	s	METAL, CHIP 47k 5% 1/10W	
R172	1-216-025-91	s	METAL, CHIP 100 5% 1/10W	
R173	1-216-089-91	s	METAL, CHIP 47k 5% 1/10W	
R176	1-216-295-91	s	RES, CHIP 0	
R177	1-216-073-00	s	METAL, CHIP 10k 5% 1/10W	
R178	1-216-089-91	s	METAL, CHIP 47k 5% 1/10W	*1)
R179	1-216-049-91	s	METAL, CHIP 1k 5% 1/10W	
R180	1-216-022-00	s	METAL, CHIP 75 5% 1/10W	*1)
R181	1-216-022-00	s	METAL, CHIP 75 5% 1/10W	*1)
R182	1-216-295-91	s	RES, CHIP 0	*1)
	1-216-033-00	s	METAL, CHIP 220 5% 1/10W	*2)
R183	1-216-295-91	s	RES, CHIP 0	*1)
	1-216-033-00	s	METAL, CHIP 220 5% 1/10W	*2)
R201	1-216-049-91	s	METAL, CHIP 1k 5% 1/10W	
R202	1-216-049-91	s	METAL, CHIP 1k 5% 1/10W	
R205	1-216-073-00	s	METAL, CHIP 10k 5% 1/10W	
R206	1-216-073-00	s	METAL, CHIP 10k 5% 1/10W	
R207	1-216-073-00	s	METAL, CHIP 10k 5% 1/10W	
R208	1-216-073-00	s	METAL, CHIP 10k 5% 1/10W	
R209	1-216-073-00	s	METAL, CHIP 10k 5% 1/10W	
R210	1-216-073-00	s	METAL, CHIP 10k 5% 1/10W	
R211	1-216-073-00	s	METAL, CHIP 10k 5% 1/10W	
R212	1-216-073-00	s	METAL, CHIP 10k 5% 1/10W	
R213	1-216-089-91	s	METAL, CHIP 47k 5% 1/10W	
R214	1-216-073-00	s	METAL, CHIP 10k 5% 1/10W	
R215	1-216-089-91	s	METAL, CHIP 47k 5% 1/10W	
R216	1-216-089-91	s	METAL, CHIP 47k 5% 1/10W	
R217	1-216-089-91	s	METAL, CHIP 47k 5% 1/10W	
R218	1-216-097-91	s	METAL, CHIP 100k 5% 1/10W	*1)
R219	1-216-097-91	s	METAL, CHIP 100k 5% 1/10W	*1)
R220	1-216-097-91	s	METAL, CHIP 100k 5% 1/10W	*1)
R221	1-216-073-00	s	METAL, CHIP 10k 5% 1/10W	
R222	1-216-073-00	s	METAL, CHIP 10k 5% 1/10W	
R223	1-216-049-91	s	METAL, CHIP 1k 5% 1/10W	
R224	1-216-049-91	s	METAL, CHIP 1k 5% 1/10W	
R225	1-216-049-91	s	METAL, CHIP 1k 5% 1/10W	
R226	1-216-097-91	s	METAL, CHIP 100k 5% 1/10W	*1)
R227	1-216-097-91	s	METAL, CHIP 100k 5% 1/10W	*1)
R228	1-216-097-91	s	METAL, CHIP 100k 5% 1/10W	*1)
R229	1-216-049-91	s	METAL, CHIP 1k 5% 1/10W	
R231	1-216-121-91	s	METAL, CHIP 1M 5% 1/10W	
R232	1-216-049-91	s	METAL, CHIP 1k 5% 1/10W	

(SV-184 BOARD)

Ref. No. or Q'ty	Part No.	SP	Description
R233	1-216-049-91	s	METAL, CHIP 1k 5% 1/10W
R234	1-216-049-91	s	METAL, CHIP 1k 5% 1/10W
R235	1-216-049-91	s	METAL, CHIP 1k 5% 1/10W
R236	1-216-049-91	s	METAL, CHIP 1k 5% 1/10W
R237	1-216-049-91	s	METAL, CHIP 1k 5% 1/10W
R238	1-216-097-91	s	METAL, CHIP 100k 5% 1/10W
R239	1-216-081-00	s	METAL, CHIP 22k 5% 1/10W
R240	1-216-105-91	s	METAL, CHIP 220k 5% 1/10W
R241	1-216-105-91	s	METAL, CHIP 220k 5% 1/10W
R243	1-216-295-91	s	RES, CHIP 0
R244	1-216-097-91	s	METAL, CHIP 100k 5% 1/10W
R245	1-216-081-00	s	METAL, CHIP 22k 5% 1/10W
R246	1-216-105-91	s	METAL, CHIP 220k 5% 1/10W
R247	1-216-089-91	s	METAL, CHIP 47k 5% 1/10W
R248	1-216-089-91	s	METAL, CHIP 47k 5% 1/10W
R249	1-216-089-91	s	METAL, CHIP 47k 5% 1/10W
R250	1-216-025-91	s	METAL, CHIP 100 5% 1/10W
R251	1-216-025-91	s	METAL, CHIP 100 5% 1/10W
R252	1-216-049-91	s	METAL, CHIP 1k 5% 1/10W
R253	1-216-049-91	s	METAL, CHIP 1k 5% 1/10W
R256	1-216-049-91	s	METAL, CHIP 1k 5% 1/10W
R257	1-216-049-91	s	METAL, CHIP 1k 5% 1/10W
R258	1-216-049-91	s	METAL, CHIP 1k 5% 1/10W
R260	1-216-025-91	s	METAL, CHIP 100 5% 1/10W
R261	1-216-025-91	s	METAL, CHIP 100 5% 1/10W
R262	1-216-049-91	s	METAL, CHIP 1k 5% 1/10W
R263	1-216-049-91	s	METAL, CHIP 1k 5% 1/10W
R264	1-216-049-91	s	METAL, CHIP 1k 5% 1/10W
R266	1-216-049-91	s	METAL, CHIP 1k 5% 1/10W
R267	1-216-049-91	s	METAL, CHIP 1k 5% 1/10W
R268	1-216-049-91	s	METAL, CHIP 1k 5% 1/10W
R271	1-216-049-91	s	METAL, CHIP 1k 5% 1/10W
R272	1-216-049-91	s	METAL, CHIP 1k 5% 1/10W
R273	1-216-049-91	s	METAL, CHIP 1k 5% 1/10W
R274	1-216-049-91	s	METAL, CHIP 1k 5% 1/10W
R275	1-216-049-91	s	METAL, CHIP 1k 5% 1/10W
R276	1-216-049-91	s	METAL, CHIP 1k 5% 1/10W
R277	1-216-295-91	s	RES, CHIP 0
R278	1-216-295-91	s	RES, CHIP 0
R279	1-216-089-91	s	METAL, CHIP 47k 5% 1/10W
R280	1-216-089-91	s	METAL, CHIP 47k 5% 1/10W
R281	1-216-068-00	s	METAL, CHIP 6.2k 5% 1/10W
R282	1-216-075-00	s	METAL, CHIP 12k 5% 1/10W
R283	1-216-068-00	s	METAL, CHIP 6.2k 5% 1/10W
R284	1-216-295-91	s	RES, CHIP 0
R285	1-216-295-91	s	RES, CHIP 0
R286	1-216-097-91	s	METAL, CHIP 100k 5% 1/10W
R287	1-216-089-91	s	METAL, CHIP 47k 5% 1/10W
R288	1-216-049-91	s	METAL, CHIP 1k 5% 1/10W
R289	1-216-089-91	s	METAL, CHIP 47k 5% 1/10W
R290	1-216-089-91	s	METAL, CHIP 47k 5% 1/10W
R291	1-216-049-91	s	METAL, CHIP 1k 5% 1/10W
R292	1-216-049-91	s	METAL, CHIP 1k 5% 1/10W
R296	1-216-049-91	s	METAL, CHIP 1k 5% 1/10W
R297	1-216-049-91	s	METAL, CHIP 1k 5% 1/10W
R315	1-216-073-00	s	METAL, CHIP 10k 5% 1/10W
R316	1-216-073-00	s	METAL, CHIP 10k 5% 1/10W
R317	1-216-073-00	s	METAL, CHIP 10k 5% 1/10W
R318	1-216-073-00	s	METAL, CHIP 10k 5% 1/10W

(SV-184 BOARD)

Ref. No. or Q'ty	Part No.	SP	Description
R319	1-216-073-00	s	METAL, CHIP 10k 5% 1/10W
R320	1-216-081-00	s	METAL, CHIP 22k 5% 1/10W
R321	1-216-073-00	s	METAL, CHIP 10k 5% 1/10W
R322	1-216-081-00	s	METAL, CHIP 22k 5% 1/10W
R323	1-216-089-91	s	METAL, CHIP 47k 5% 1/10W
R324	1-216-089-91	s	METAL, CHIP 47k 5% 1/10W
R325	1-216-057-00	s	METAL, CHIP 2.2k 5% 1/10W
R327	1-216-073-00	s	METAL, CHIP 10k 5% 1/10W
R328	1-216-073-00	s	METAL, CHIP 10k 5% 1/10W
R329	1-216-097-91	s	METAL, CHIP 100k 5% 1/10W
R330	1-216-089-91	s	METAL, CHIP 47k 5% 1/10W
R331	1-216-073-00	s	METAL, CHIP 10k 5% 1/10W
R332	1-216-073-00	s	METAL, CHIP 10k 5% 1/10W
R333	1-216-073-00	s	METAL, CHIP 10k 5% 1/10W
R335	1-216-073-00	s	METAL, CHIP 10k 5% 1/10W
R336	1-216-089-91	s	METAL, CHIP 47k 5% 1/10W
R337	1-216-113-00	s	METAL, CHIP 470k 5% 1/10W
R338	1-216-113-00	s	METAL, CHIP 470k 5% 1/10W
R339	1-216-057-00	s	METAL, CHIP 2.2k 5% 1/10W
R340	1-216-097-91	s	METAL, CHIP 100k 5% 1/10W
R341	1-216-057-00	s	METAL, CHIP 2.2k 5% 1/10W
R342	1-216-057-00	s	METAL, CHIP 2.2k 5% 1/10W
R343	1-216-073-00	s	METAL, CHIP 10k 5% 1/10W
R344	1-216-049-91	s	METAL, CHIP 1k 5% 1/10W
R345	1-216-073-00	s	METAL, CHIP 10k 5% 1/10W
R346	1-216-073-00	s	METAL, CHIP 10k 5% 1/10W
R347	1-216-105-91	s	METAL, CHIP 220k 5% 1/10W
R348	1-216-073-00	s	METAL, CHIP 10k 5% 1/10W
R349	1-215-863-11	s	METAL 100 5% 1W
R350	1-215-863-11	s	METAL 100 5% 1W
R351	1-216-079-00	s	METAL, CHIP 18k 5% 1/10W
R352	1-216-073-00	s	METAL, CHIP 10k 5% 1/10W
R353	1-216-103-00	s	METAL, CHIP 180k 5% 1/10W
R354	1-216-383-11	s	METAL 0.33 5% 3W
R355	1-216-073-00	s	METAL, CHIP 10k 5% 1/10W
R356	1-216-365-00	s	METAL 0.47 5% 2W
R357	1-216-073-00	s	METAL, CHIP 10k 5% 1/10W
R358	1-216-073-00	s	METAL, CHIP 10k 5% 1/10W
R359	1-216-073-00	s	METAL, CHIP 10k 5% 1/10W
R360	1-216-073-00	s	METAL, CHIP 10k 5% 1/10W
R361	1-216-089-91	s	METAL, CHIP 47k 5% 1/10W
R362	1-216-089-91	s	METAL, CHIP 47k 5% 1/10W
R363	1-216-049-91	s	METAL, CHIP 1k 5% 1/10W
R364	1-216-109-00	s	METAL, CHIP 330k 5% 1/10W
R365	1-216-109-00	s	METAL, CHIP 330k 5% 1/10W
R366	1-216-085-00	s	METAL, CHIP 33k 5% 1/10W
R367	1-216-085-00	s	METAL, CHIP 33k 5% 1/10W
R368	1-216-073-00	s	METAL, CHIP 10k 5% 1/10W
R369	1-216-073-00	s	METAL, CHIP 10k 5% 1/10W
R370	1-216-109-00	s	METAL, CHIP 330k 5% 1/10W
R371	1-216-109-00	s	METAL, CHIP 330k 5% 1/10W
R372	1-216-675-11	s	METAL, CHIP 10k 0.5% 1/10W
R373	1-216-675-11	s	METAL, CHIP 10k 0.5% 1/10W
R374	1-216-675-11	s	METAL, CHIP 10k 0.5% 1/10W
R375	1-216-675-11	s	METAL, CHIP 10k 0.5% 1/10W
R376	1-216-675-11	s	METAL, CHIP 10k 0.5% 1/10W
R377	1-216-675-11	s	METAL, CHIP 10k 0.5% 1/10W
R378	1-216-057-00	s	METAL, CHIP 2.2k 5% 1/10W
R379	1-216-057-00	s	METAL, CHIP 2.2k 5% 1/10W

(SV-184 BOARD)

Ref. No. or Q'ty	Part No.	SP	Description	
R380	1-216-049-91	s	METAL, CHIP 1k 5% 1/10W	
R381	1-216-049-91	s	METAL, CHIP 1k 5% 1/10W	
R382	1-216-061-00	s	METAL, CHIP 3.3k 5% 1/10W	
R383	1-216-061-00	s	METAL, CHIP 3.3k 5% 1/10W	
R384	1-216-121-91	s	METAL, CHIP 1M 5% 1/10W	
R385	1-216-121-91	s	METAL, CHIP 1M 5% 1/10W	
R386	1-216-049-91	s	METAL, CHIP 1k 5% 1/10W	
R387	1-216-049-91	s	METAL, CHIP 1k 5% 1/10W	
R388	1-216-073-00	s	METAL, CHIP 10k 5% 1/10W	
R389	1-216-073-00	s	METAL, CHIP 10k 5% 1/10W	
R390	1-216-049-91	s	METAL, CHIP 1k 5% 1/10W	
R391	1-216-049-91	s	METAL, CHIP 1k 5% 1/10W	
R392	1-216-049-91	s	METAL, CHIP 1k 5% 1/10W	
R393	1-216-073-00	s	METAL, CHIP 10k 5% 1/10W	
R394	1-216-049-91	s	METAL, CHIP 1k 5% 1/10W	
R395	1-216-049-91	s	METAL, CHIP 1k 5% 1/10W	
R396	1-216-073-00	s	METAL, CHIP 10k 5% 1/10W	
R397	1-216-049-91	s	METAL, CHIP 1k 5% 1/10W	
R398	1-215-863-11	s	METAL 100 5% 1W	
R399	1-215-863-11	s	METAL 100 5% 1W	
R400	1-215-889-00	s	METAL 330 5% 2W	
R401	1-215-889-00	s	METAL 330 5% 2W	
R402	1-215-889-00	s	METAL 330 5% 2W	
R403	1-215-889-00	s	METAL 330 5% 2W	
R404	1-215-863-11	s	METAL 100 5% 1W	
R405	1-215-863-11	s	METAL 100 5% 1W	
R406	1-216-049-91	s	METAL, CHIP 1k 5% 1/10W	
R407	1-216-049-91	s	METAL, CHIP 1k 5% 1/10W	
R408	1-216-049-91	s	METAL, CHIP 1k 5% 1/10W	
R409	1-216-049-91	s	METAL, CHIP 1k 5% 1/10W	
R410	1-216-365-00	s	METAL 0.47 5% 2W	
R411	1-216-073-00	s	METAL, CHIP 10k 5% 1/10W	*3)
	1-216-675-11	s	METAL, CHIP 10k 0.5% 1/10W	*4)
R412	1-216-089-91	s	METAL, CHIP 47k 5% 1/10W	
R413	1-216-089-91	s	METAL, CHIP 47k 5% 1/10W	
R414	1-216-365-00	s	METAL 0.47 5% 2W	
R415	1-216-073-00	s	METAL, CHIP 10k 5% 1/10W	*3)
	1-216-675-11	s	METAL, CHIP 10k 0.5% 1/10W	*4)
R416	1-216-365-00	s	METAL 0.47 5% 2W	
R417	1-216-073-00	s	METAL, CHIP 10k 5% 1/10W	*3)
	1-216-675-11	s	METAL, CHIP 10k 0.5% 1/10W	*4)
R418	1-216-365-00	s	METAL 0.47 5% 2W	
R419	1-216-073-00	s	METAL, CHIP 10k 5% 1/10W	*3)
	1-216-675-11	s	METAL, CHIP 10k 0.5% 1/10W	*4)
R420	1-216-073-00	s	METAL, CHIP 10k 5% 1/10W	*3)
	1-216-675-11	s	METAL, CHIP 10k 0.5% 1/10W	*4)
R421	1-216-073-00	s	METAL, CHIP 10k 5% 1/10W	
R422	1-216-089-91	s	METAL, CHIP 47k 5% 1/10W	*3)
	1-216-691-11	s	METAL, CHIP 47k 0.5% 1/10W	*4)
R423	1-216-073-00	s	METAL, CHIP 10k 5% 1/10W	*3)
	1-216-675-11	s	METAL, CHIP 10k 0.5% 1/10W	*4)

(SV-184 BOARD)

Ref. No. or Q'ty	Part No.	SP	Description	
R424	1-216-089-91	s	METAL, CHIP 47k 5% 1/10W	*3)
	1-216-691-11	s	METAL, CHIP 47k 0.5% 1/10W	*4)
R425	1-216-073-00	s	METAL, CHIP 10k 5% 1/10W	*3)
	1-216-675-11	s	METAL, CHIP 10k 0.5% 1/10W	*4)
R426	1-216-089-91	s	METAL, CHIP 47k 5% 1/10W	*3)
	1-216-691-11	s	METAL, CHIP 47k 0.5% 1/10W	*4)
R427	1-216-073-00	s	METAL, CHIP 10k 5% 1/10W	
R428	1-216-089-91	s	METAL, CHIP 47k 5% 1/10W	
R429	1-216-073-00	s	METAL, CHIP 10k 5% 1/10W	*3)
	1-216-675-11	s	METAL, CHIP 10k 0.5% 1/10W	*4)
R430	1-216-089-91	s	METAL, CHIP 47k 5% 1/10W	*3)
	1-216-691-11	s	METAL, CHIP 47k 0.5% 1/10W	*4)
R431	1-216-089-91	s	METAL, CHIP 47k 5% 1/10W	
R432	1-216-073-00	s	METAL, CHIP 10k 5% 1/10W	
R433	1-216-073-00	s	METAL, CHIP 10k 5% 1/10W	
R434	1-216-365-00	s	METAL 0.47 5% 2W	
R435	1-216-089-91	s	METAL, CHIP 47k 5% 1/10W	*3)
	1-216-691-11	s	METAL, CHIP 47k 0.5% 1/10W	*4)
R436	1-216-089-91	s	METAL, CHIP 47k 5% 1/10W	*3)
	1-216-691-11	s	METAL, CHIP 47k 0.5% 1/10W	*4)
R437	1-216-089-91	s	METAL, CHIP 47k 5% 1/10W	*3)
	1-216-691-11	s	METAL, CHIP 47k 0.5% 1/10W	*4)
R438	1-216-365-00	s	METAL 0.47 5% 2W	
R439	1-216-089-91	s	METAL, CHIP 47k 5% 1/10W	*3)
	1-216-691-11	s	METAL, CHIP 47k 0.5% 1/10W	*4)
R440	1-216-001-00	s	METAL, CHIP 10 5% 1/10W	
R441	1-216-097-91	s	METAL, CHIP 100k 5% 1/10W	
R442	1-216-686-11	s	METAL, CHIP 30k 0.5% 1/10W	
R443	1-216-665-11	s	METAL, CHIP 3.9k 0.5% 1/10W	
R444	1-216-648-11	s	METAL, CHIP 750 0.5% 1/10W	
R445	1-216-659-11	s	METAL, CHIP 2.2k 0.5% 1/10W	
R446	1-216-659-11	s	METAL, CHIP 2.2k 0.5% 1/10W	
R447	1-216-691-11	s	METAL, CHIP 47k 0.5% 1/10W	
R448	1-216-691-11	s	METAL, CHIP 47k 0.5% 1/10W	
R449	1-216-699-11	s	METAL, CHIP 100k 0.5% 1/10W	
R450	1-216-675-11	s	METAL, CHIP 10k 0.5% 1/10W	
R451	1-216-073-00	s	METAL, CHIP 10k 5% 1/10W	
R452	1-218-764-11	s	METAL, CHIP 330k 0.5% 1/10W	
R453	1-216-073-00	s	METAL, CHIP 10k 5% 1/10W	
R454	1-216-073-00	s	METAL, CHIP 10k 5% 1/10W	
R455	1-215-866-11	s	METAL, CHIP 330 5% 1W	
R456	1-216-057-00	s	METAL, CHIP 2.2k 5% 1/10W	
R457	1-216-025-91	s	METAL, CHIP 100 5% 1/10W	
R458	1-218-764-11	s	METAL 330k 0.5% 1/10W	
R459	1-216-057-00	s	METAL, CHIP 2.2k 5% 1/10W	*7)
	1-247-839-11	s	CARBON 2.2k 5% 1/4W	*8)
R460	1-218-764-11	s	METAL 330k 0.5% 1/10W	

(SV-184 BOARD)

Ref. No. or Q'ty	Part No.	SP	Description	
R461	1-216-049-91	s	METAL, CHIP 1k 5% 1/10W	
R462	1-216-073-00	s	METAL, CHIP 10k 5% 1/10W	
R463	1-216-073-00	s	METAL, CHIP 10k 5% 1/10W	
R464	1-216-073-00	s	METAL, CHIP 10k 5% 1/10W	
R465	1-216-073-00	s	METAL, CHIP 10k 5% 1/10W	
R466	1-216-073-00	s	METAL, CHIP 10k 5% 1/10W	
R467	1-216-073-00	s	METAL, CHIP 10k 5% 1/10W	
R468	1-216-025-91	s	METAL, CHIP 100 5% 1/10W	
R469	1-216-105-91	s	METAL, CHIP 220k 5% 1/10W	
R470	1-216-025-91	s	METAL, CHIP 100 5% 1/10W	
R471	1-215-863-11	s	METAL 100 5% 1W	
R472	1-215-867-00	s	METAL 470 5% 1W	
R473	1-215-868-00	s	METAL 680 5% 1W	
R474	1-216-383-11	s	METAL 0.33 5% 3W	
R475	1-216-383-11	s	METAL 0.33 5% 3W	
R476	1-216-383-11	s	METAL 0.33 5% 3W	
R477	1-216-061-00	s	METAL, CHIP 3.3k 5% 1/10W	
R478	1-216-385-11	s	METAL 0.47 5% 3W	
R479	1-216-073-00	s	METAL, CHIP 10k 5% 1/10W	
R480	1-216-073-00	s	METAL, CHIP 10k 5% 1/10W	
R481	1-216-073-00	s	METAL, CHIP 10k 5% 1/10W	
R482	1-216-097-91	s	METAL, CHIP 100k 5% 1/10W	
R483	1-216-057-00	s	METAL, CHIP 2.2k 5% 1/10W	*7)
	1-247-839-11	s	CARBON 2.2k 5% 1/4W	*8)
R500	1-216-065-91	s	METAL, CHIP 4.7k 5% 1/10W	
R501	1-216-065-91	s	METAL, CHIP 4.7k 5% 1/10W	
R502	1-216-113-00	s	METAL, CHIP 470k 5% 1/10W	
R503	1-216-097-91	s	METAL, CHIP 100k 5% 1/10W	
R504	1-216-073-00	s	METAL, CHIP 10k 5% 1/10W	
R505	1-216-065-91	s	METAL, CHIP 4.7k 5% 1/10W	
R506	1-216-065-91	s	METAL, CHIP 4.7k 5% 1/10W	
R507	1-216-073-00	s	METAL, CHIP 10k 5% 1/10W	*3)
	1-216-675-11	s	METAL, CHIP 10k 0.5% 1/10W	*4)
R508	1-216-097-91	s	METAL, CHIP 100k 5% 1/10W	*3)
	1-216-699-11	s	METAL, CHIP 100k 0.5% 1/10W	*4)
R509	1-216-073-00	s	METAL, CHIP 10k 5% 1/10W	*3)
	1-216-675-11	s	METAL, CHIP 10k 0.5% 1/10W	*4)
R510	1-216-073-00	s	METAL, CHIP 10k 5% 1/10W	*3)
	1-216-675-11	s	METAL, CHIP 10k 0.5% 1/10W	*4)
R511	1-216-097-91	s	METAL, CHIP 100k 5% 1/10W	*3)
	1-216-699-11	s	METAL, CHIP 100k 0.5% 1/10W	*4)
R512	1-216-073-00	s	METAL, CHIP 10k 5% 1/10W	*3)
	1-216-675-11	s	METAL, CHIP 10k 0.5% 1/10W	*4)
R513	1-216-073-00	s	METAL, CHIP 10k 5% 1/10W	*3)
	1-216-675-11	s	METAL, CHIP 10k 0.5% 1/10W	*4)
R514	1-216-097-91	s	METAL, CHIP 100k 5% 1/10W	*3)
	1-216-699-11	s	METAL, CHIP 100k 0.5% 1/10W	*4)

(SV-184 BOARD)

Ref. No. or Q'ty	Part No.	SP	Description	
R515	1-216-073-00	s	METAL, CHIP 10k 5% 1/10W	*3)
	1-216-675-11	s	METAL, CHIP 10k 0.5% 1/10W	*4)
R516	1-216-073-00	s	METAL, CHIP 10k 5% 1/10W	*3)
	1-216-675-11	s	METAL, CHIP 10k 0.5% 1/10W	*4)
R517	1-216-097-91	s	METAL, CHIP 100k 5% 1/10W	*3)
	1-216-699-11	s	METAL, CHIP 100k 0.5% 1/10W	*4)
R518	1-216-073-00	s	METAL, CHIP 10k 5% 1/10W	*3)
	1-216-675-11	s	METAL, CHIP 10k 0.5% 1/10W	*4)
RB1	1-239-308-11	s	RESISTOR BLOCK, CHIP 47k x 8	
RB2	1-236-904-11	s	RESISTOR BLOCK, CHIP 1k x 4	*1)
RB102	1-239-308-11	s	RESISTOR BLOCK, CHIP 47k x 8	
RB103	1-239-308-11	s	RESISTOR BLOCK, CHIP 47k x 8	
RB104	1-239-308-11	s	RESISTOR BLOCK, CHIP 47k x 8	*2)
RB201	1-239-389-11	s	RESISTOR BLOCK, CHIP 47k x 4	
RB262	1-239-309-11	s	RESISTOR BLOCK, CHIP 100k x 8	*1)
S101	1-692-536-11	s	SWITCH, DIP, CHIP 8-CKT	
S201	1-692-535-11	s	SWITCH, DIP, CHIP 4-CKT	
TP1	1-535-881-21	o	TERMINAL, TP	
TP6	1-535-881-21	o	TERMINAL, TP	
TP7	1-535-881-21	o	TERMINAL, TP	
TP101	1-535-881-21	o	TERMINAL, TP	
TP102	1-535-881-21	o	TERMINAL, TP	
TP103	1-535-881-21	o	TERMINAL, TP	
TP104	1-535-881-21	o	TERMINAL, TP	
TP105	1-535-881-21	o	TERMINAL, TP	
TP106	1-535-881-21	o	TERMINAL, TP	
TP107	1-535-881-21	o	TERMINAL, TP	
TP108	1-535-881-21	o	TERMINAL, TP	
TP201	1-535-881-21	o	TERMINAL, TP	
TP202	1-535-881-21	o	TERMINAL, TP	
TP203	1-535-881-21	o	TERMINAL, TP	
TP204	1-535-881-21	o	TERMINAL, TP	
TP205	1-535-881-21	o	TERMINAL, TP	
TP206	1-535-881-21	o	TERMINAL, TP	
TP207	1-535-881-21	o	TERMINAL, TP	
TP208	1-535-881-21	o	TERMINAL, TP	
TP301	1-535-881-21	o	TERMINAL, TP	
TP303	1-535-881-21	o	TERMINAL, TP	
TP305	1-535-881-21	o	TERMINAL, TP	
X1	1-579-996-21	s	VIBRATOR, CERAMIC 20.0MHz	
X101	1-579-996-21	s	VIBRATOR, CERAMIC 20.0MHz	
X201	1-579-996-21	s	VIBRATOR, CERAMIC 20.0MHz	

SY-241 BOARD

Ref. No.
or Q'ty Part No. SP Description

The parts marked * are different, depending on the product serial numbers, as shown below:

*1) Serial number; 10001 through 10430 (For DSR-80 J)
Serial number; 10001 through 10470 (For DSR-80 UC)
Serial number; 10001 through 10320 (For DSR-80P CE)

*2) Serial number; 10431 and higher (For DSR-80 J)
Serial number; 10471 and higher (For DSR-80 UC)
Serial number; 10321 and higher (For DSR-80P CE)
Serial number; 10001 and higher (For DSR-80P UC)

Ref. No. or Q'ty	Part No.	SP	Description
1pc	A-8315-284-A	s	MOUNTED CIRCUIT BOARD, SY-241
1pc	7-621-759-45	s	+PSW, 2.6x6
1pc	3-179-084-01	s	LEVER (R), PRINTED CIRCUIT BOARD
1pc	3-179-085-01	s	LEVER (L), PRINTED CIRCUIT BOARD
C101	1-163-038-91	s	CERAMIC, CHIP 0.1uF 25V
C102	1-163-038-91	s	CERAMIC, CHIP 0.1uF 25V
C103	1-163-038-91	s	CERAMIC, CHIP 0.1uF 25V
C104	1-126-947-11	s	ELECT 47uF 20% 35V
C105	1-126-933-11	s	ELECT 100uF 20% 16V
C106	1-126-933-11	s	ELECT 100uF 20% 16V
C107	1-126-933-11	s	ELECT 100uF 20% 16V
C108	1-163-038-91	s	CERAMIC, CHIP 0.1uF 25V
C109	1-163-038-91	s	CERAMIC, CHIP 0.1uF 25V
C110	1-163-038-91	s	CERAMIC, CHIP 0.1uF 25V
C111	1-126-933-11	s	ELECT 100uF 20% 16V
C112	1-107-689-21	s	TANTALUM, CHIP 1uF 20% 35V
C113	1-163-038-91	s	CERAMIC, CHIP 0.1uF 25V
C114	1-163-038-91	s	CERAMIC, CHIP 0.1uF 25V
C115	1-163-251-11	s	CERAMIC, CHIP 100pF 5% 50V
C116	1-163-038-91	s	CERAMIC, CHIP 0.1uF 25V
C117	1-163-038-91	s	CERAMIC, CHIP 0.1uF 25V
C118	1-163-038-91	s	CERAMIC, CHIP 0.1uF 25V
C119	1-163-038-91	s	CERAMIC, CHIP 0.1uF 25V
C120	1-163-227-11	s	CERAMIC, CHIP 10pF 5% 50V
C121	1-163-227-11	s	CERAMIC, CHIP 10pF 5% 50V
C122	1-163-038-91	s	CERAMIC, CHIP 0.1uF 25V
C123	1-104-664-11	s	ELECT 47uF 20% 25V
C124	1-163-038-91	s	CERAMIC, CHIP 0.1uF 25V
C125	1-163-038-91	s	CERAMIC, CHIP 0.1uF 25V
C126	1-163-038-91	s	CERAMIC, CHIP 0.1uF 25V
C127	1-163-038-91	s	CERAMIC, CHIP 0.1uF 25V
C128	1-163-038-91	s	CERAMIC, CHIP 0.1uF 25V
C201	1-163-038-91	s	CERAMIC, CHIP 0.1uF 25V
C202	1-163-038-91	s	CERAMIC, CHIP 0.1uF 25V
C203	1-163-038-91	s	CERAMIC, CHIP 0.1uF 25V
C204	1-163-038-91	s	CERAMIC, CHIP 0.1uF 25V
C205	1-163-038-91	s	CERAMIC, CHIP 0.1uF 25V
C206	1-163-038-91	s	CERAMIC, CHIP 0.1uF 25V
C207	1-163-038-91	s	CERAMIC, CHIP 0.1uF 25V
C208	1-163-038-91	s	CERAMIC, CHIP 0.1uF 25V
C209	1-163-038-91	s	CERAMIC, CHIP 0.1uF 25V
C210	1-163-038-91	s	CERAMIC, CHIP 0.1uF 25V
C213	1-163-038-91	s	CERAMIC, CHIP 0.1uF 25V
C214	1-163-038-91	s	CERAMIC, CHIP 0.1uF 25V
C301	1-163-133-00	s	CERAMIC, CHIP 470pF 5% 50V
C302	1-104-664-11	s	ELECT 47uF 20% 25V
C303	1-163-038-91	s	CERAMIC, CHIP 0.1uF 25V
C304	1-163-038-91	s	CERAMIC, CHIP 0.1uF 25V
C305	1-163-038-91	s	CERAMIC, CHIP 0.1uF 25V

(SY-241 BOARD)

Ref. No. or Q'ty	Part No.	SP	Description
C306	1-163-038-91	s	CERAMIC, CHIP 0.1uF 25V
C307	1-163-227-11	s	CERAMIC, CHIP 10pF 5% 50V
C308	1-163-227-11	s	CERAMIC, CHIP 10pF 5% 50V
C309	1-163-038-91	s	CERAMIC, CHIP 0.1uF 25V
C310	1-163-038-91	s	CERAMIC, CHIP 0.1uF 25V
C311	1-163-038-91	s	CERAMIC, CHIP 0.1uF 25V
C312	1-163-038-91	s	CERAMIC, CHIP 0.1uF 25V
C313	1-163-038-91	s	CERAMIC, CHIP 0.1uF 25V
C314	1-163-038-91	s	CERAMIC, CHIP 0.1uF 25V
C315	1-163-038-91	s	CERAMIC, CHIP 0.1uF 25V
C316	1-163-038-91	s	CERAMIC, CHIP 0.1uF 25V
C317	1-163-038-91	s	CERAMIC, CHIP 0.1uF 25V
C318	1-163-038-91	s	CERAMIC, CHIP 0.1uF 25V
C319	1-163-038-91	s	CERAMIC, CHIP 0.1uF 25V
C320	1-163-038-91	s	CERAMIC, CHIP 0.1uF 25V
C321	1-163-038-91	s	CERAMIC, CHIP 0.1uF 25V
C322	1-163-038-91	s	CERAMIC, CHIP 0.1uF 25V
C323	1-163-251-11	s	CERAMIC, CHIP 100pF 5% 50V
C401	1-163-038-91	s	CERAMIC, CHIP 0.1uF 25V
C402	1-163-038-91	s	CERAMIC, CHIP 0.1uF 25V
C403	1-163-038-91	s	CERAMIC, CHIP 0.1uF 25V
C404	1-163-038-91	s	CERAMIC, CHIP 0.1uF 25V
C408	1-163-038-91	s	CERAMIC, CHIP 0.1uF 25V
C409	1-163-038-91	s	CERAMIC, CHIP 0.1uF 25V
C410	1-163-038-91	s	CERAMIC, CHIP 0.1uF 25V
C412	1-163-038-91	s	CERAMIC, CHIP 0.1uF 25V
C414	1-163-038-91	s	CERAMIC, CHIP 0.1uF 25V
C415	1-163-038-91	s	CERAMIC, CHIP 0.1uF 25V
C417	1-163-251-11	s	CERAMIC, CHIP 100pF 5% 50V
C418	1-163-251-11	s	CERAMIC, CHIP 100pF 5% 50V
CN1	1-778-889-11	o	CONNECTOR, BB 34P, FEMALE
CN2	1-565-879-11	s	CONNECTOR 7P, MALE
CNI102	1-526-660-21	o	SOCKET, IC 32P
CNI103	1-526-660-21	o	SOCKET, IC 32P
CNI316	1-526-660-21	o	SOCKET, IC 32P
CNI317	1-526-660-21	o	SOCKET, IC 32P
CV101	1-141-389-11	s	CAP, TRIMMER 50pF
E101	1-535-881-21	o	TERMINAL, TP
E301	1-535-881-21	o	TERMINAL, TP
E302	1-535-881-21	o	TERMINAL, TP
FB101	1-412-364-11	s	FILTER, NOISE, CHIP
FL301	1-233-314-11	s	FILTER, NOISE, CHIP
FL302	1-233-314-11	s	FILTER, NOISE, CHIP
FL303	1-239-719-11	s	FILTER, NOISE, CHIP
IC101	8-759-525-99	s	IC HD6437021SC02X
IC102	8-759-539-75	o	IC M27C1001-70F1-85SY102-V1.31
IC103	8-759-539-76	o	IC M27C1001-70F1-85SY103-V1.31
IC104	8-759-479-32	s	IC SN75C1168NS-E05
IC105	8-759-192-25	s	IC UPD6453GT-635-E2
IC106	8-759-186-44	s	IC TC74VHC125F
IC107	8-759-186-47	s	IC TC74VHC138F(EL)
IC108	8-759-186-47	s	IC TC74VHC138F(EL)
IC109	8-759-296-24	s	IC CY7C199-20VC
IC110	8-759-296-24	s	IC CY7C199-20VC
IC111	8-759-186-84	s	IC TC74VHC86F(EL)
IC112	8-759-081-44	s	IC TC74VHC04F

(SY-241 BOARD)

Ref. No. or Q'ty	Part No.	SP	Description	
IC113	8-759-369-92	s	IC M51958AFP600D	
IC114	8-759-074-51	s	IC S-8054HNM-CQ-T1	*2)
IC201	8-759-186-47	s	IC TC74VHC138F(EL)	
IC202	8-759-186-63	s	IC TC74VHC245F(EL)	
IC203	8-759-186-63	s	IC TC74VHC245F(EL)	
IC204	8-759-186-63	s	IC TC74VHC245F(EL)	
IC206	8-759-186-32	s	IC TC74VHC21F	
IC208	8-759-053-58	s	IC IDT6116SA25SO	
IC209	8-759-095-41	s	IC CXD8176AQ	
IC210	8-759-053-58	s	IC IDT6116SA25SO	
IC211	8-759-095-41	s	IC CXD8176AQ	
IC212	8-759-926-69	s	IC SN74HC377ANS	
IC213	8-759-186-77	s	IC TC74VHC541F	
IC214	8-759-186-44	s	IC TC74VHC125F	
IC301	8-759-186-38	s	IC TC74VHC32F(EL)	
IC302	8-759-186-77	s	IC TC74VHC541F	
IC307	8-759-466-16	s	IC IDT7164S20Y-TL	
IC308	8-759-466-16	s	IC IDT7164S20Y-TL	
IC309	8-759-186-47	s	IC TC74VHC138F(EL)	
IC310	8-759-186-63	s	IC TC74VHC245F(EL)	
IC311	8-759-186-63	s	IC TC74VHC245F(EL)	
IC312	8-759-186-63	s	IC TC74VHC245F(EL)	
IC313	8-759-175-29	s	IC TC74VHC374F	
IC314	8-759-175-29	s	IC TC74VHC374F	
IC315	8-759-525-99	s	IC HD6437021SC02X	
IC316	8-759-539-83	o	IC M27C1001-70F1-80SY316-V1.32	
IC317	8-759-539-84	o	IC M27C1001-70F1-80SY317-V1.32	
IC401	8-759-254-78	s	IC CY7C185-25VC	
IC402	8-759-175-56	s	IC CXD8804Q	
IC403	8-759-186-77	s	IC TC74VHC541F	
IC404	8-759-186-77	s	IC TC74VHC541F	
IC405	8-759-927-12	s	IC SN74HCT244ANS	
IC410	8-759-254-78	s	IC CY7C185-25VC	
IC411	8-759-175-56	s	IC CXD8804Q	
IC412	8-759-186-77	s	IC TC74VHC541F	
IC414	8-759-927-12	s	IC SN74HCT244ANS	
L101	1-412-533-21	s	INDUCTOR 47uH	
L102	1-412-533-21	s	INDUCTOR 47uH	
L103	1-408-779-41	s	INDUCTOR, CHIP 15uH	
PS101	⚠ 1-532-679-00	s	LINK, IC 0.6A	
PS102	⚠ 1-532-675-21	s	LINK, IC 1.5A	
PS103	⚠ 1-532-679-00	s	LINK, IC 0.6A	
Q101	8-729-029-14	s	TRANSISTOR DTC144EUA-T106	
Q401	8-729-029-14	s	TRANSISTOR DTC144EUA-T106	
R101	1-216-295-91	s	RES, CHIP 0	
R102	1-216-089-91	s	METAL, CHIP 47k 5% 1/10W	
R103	1-216-049-91	s	METAL, CHIP 1k 5% 1/10W	
R104	1-216-089-91	s	METAL, CHIP 47k 5% 1/10W	
R105	1-216-049-91	s	METAL, CHIP 1k 5% 1/10W	
R106	1-216-097-91	s	METAL, CHIP 100k 5% 1/10W	
R107	1-216-089-91	s	METAL, CHIP 47k 5% 1/10W	
R108	1-216-097-91	s	METAL, CHIP 100k 5% 1/10W	
R109	1-216-077-00	s	METAL, CHIP 15k 5% 1/10W	
R110	1-216-077-00	s	METAL, CHIP 15k 5% 1/10W	
R111	1-216-097-91	s	METAL, CHIP 100k 5% 1/10W	
R112	1-216-097-91	s	METAL, CHIP 100k 5% 1/10W	
R113	1-216-689-11	s	METAL, CHIP 39k 0.5% 1/10W	*1)

(SY-241 BOARD)

Ref. No. or Q'ty	Part No.	SP	Description
	1-216-073-00	s	METAL, CHIP 10k 5% 1/10W *2)
R114	1-216-680-11	s	METAL, CHIP 16k 0.5% 1/10W *1)
R115	1-216-089-91	s	METAL, CHIP 47k 5% 1/10W
R116	1-216-295-91	s	RES, CHIP 0
R117	1-216-089-91	s	METAL, CHIP 47k 5% 1/10W
R118	1-216-295-91	s	RES, CHIP 0
R119	1-216-077-00	s	METAL, CHIP 15k 5% 1/10W
R120	1-216-077-00	s	METAL, CHIP 15k 5% 1/10W
R121	1-216-097-91	s	METAL, CHIP 100k 5% 1/10W
R122	1-216-089-91	s	METAL, CHIP 47k 5% 1/10W
R123	1-216-089-91	s	METAL, CHIP 47k 5% 1/10W
R124	1-216-097-91	s	METAL, CHIP 100k 5% 1/10W
R129	1-216-089-91	s	METAL, CHIP 47k 5% 1/10W
R130	1-216-049-91	s	METAL, CHIP 1k 5% 1/10W
R131	1-216-049-91	s	METAL, CHIP 1k 5% 1/10W
R132	1-216-049-91	s	METAL, CHIP 1k 5% 1/10W
R133	1-216-089-91	s	METAL, CHIP 47k 5% 1/10W
R134	1-216-089-91	s	METAL, CHIP 47k 5% 1/10W
R135	1-216-089-91	s	METAL, CHIP 47k 5% 1/10W
R136	1-216-049-91	s	METAL, CHIP 1k 5% 1/10W
R137	1-216-049-91	s	METAL, CHIP 1k 5% 1/10W
R138	1-216-049-91	s	METAL, CHIP 1k 5% 1/10W
R140	1-216-295-91	s	RES, CHIP 0
R141	1-216-073-00	s	METAL, CHIP 10k 5% 1/10W
R142	1-216-089-91	s	METAL, CHIP 47k 5% 1/10W
R143	1-216-089-91	s	METAL, CHIP 47k 5% 1/10W
R144	1-216-089-91	s	METAL, CHIP 47k 5% 1/10W
R145	1-216-089-91	s	METAL, CHIP 47k 5% 1/10W
R146	1-216-089-91	s	METAL, CHIP 47k 5% 1/10W
R147	1-216-025-91	s	METAL, CHIP 100 5% 1/10W
R148	1-216-025-91	s	METAL, CHIP 100 5% 1/10W
R149	1-216-025-91	s	METAL, CHIP 100 5% 1/10W
R201	1-216-089-91	s	METAL, CHIP 47k 5% 1/10W
R202	1-216-049-91	s	METAL, CHIP 1k 5% 1/10W
R203	1-216-025-91	s	METAL, CHIP 100 5% 1/10W
R204	1-216-025-91	s	METAL, CHIP 100 5% 1/10W
R205	1-216-295-91	s	RES, CHIP 0
R206	1-216-295-91	s	RES, CHIP 0
R219	1-216-073-00	s	METAL, CHIP 10k 5% 1/10W
R220	1-216-089-91	s	METAL, CHIP 47k 5% 1/10W
R301	1-216-073-00	s	METAL, CHIP 10k 5% 1/10W
R302	1-216-073-00	s	METAL, CHIP 10k 5% 1/10W
R303	1-216-089-91	s	METAL, CHIP 47k 5% 1/10W
R304	1-216-049-91	s	METAL, CHIP 1k 5% 1/10W
R305	1-216-049-91	s	METAL, CHIP 1k 5% 1/10W
R306	1-216-049-91	s	METAL, CHIP 1k 5% 1/10W
R307	1-216-049-91	s	METAL, CHIP 1k 5% 1/10W
R308	1-216-049-91	s	METAL, CHIP 1k 5% 1/10W
R309	1-216-089-91	s	METAL, CHIP 47k 5% 1/10W
R316	1-216-073-00	s	METAL, CHIP 10k 5% 1/10W
R317	1-216-073-00	s	METAL, CHIP 10k 5% 1/10W
R318	1-216-073-00	s	METAL, CHIP 10k 5% 1/10W
R321	1-216-295-91	s	RES, CHIP 0
R324	1-216-295-91	s	RES, CHIP 0
R325	1-216-089-91	s	METAL, CHIP 47k 5% 1/10W
R326	1-216-089-91	s	METAL, CHIP 47k 5% 1/10W
R327	1-216-089-91	s	METAL, CHIP 47k 5% 1/10W
R328	1-216-089-91	s	METAL, CHIP 47k 5% 1/10W

(SY-241 BOARD)

Ref. No. or Q'ty	Part No.	SP	Description
R329	1-216-017-91	s	METAL, CHIP 47 5% 1/10W
R330	1-216-017-91	s	METAL, CHIP 47 5% 1/10W
R331	1-216-017-91	s	METAL, CHIP 47 5% 1/10W
R332	1-216-022-00	s	METAL, CHIP 75 5% 1/10W
R401	1-216-089-91	s	METAL, CHIP 47k 5% 1/10W
R402	1-216-025-91	s	METAL, CHIP 100 5% 1/10W
R403	1-216-089-91	s	METAL, CHIP 47k 5% 1/10W
R404	1-216-025-91	s	METAL, CHIP 100 5% 1/10W
R405	1-216-089-91	s	METAL, CHIP 47k 5% 1/10W
R406	1-216-089-91	s	METAL, CHIP 47k 5% 1/10W
R407	1-216-089-91	s	METAL, CHIP 47k 5% 1/10W
R408	1-216-073-00	s	METAL, CHIP 10k 5% 1/10W
R409	1-216-089-91	s	METAL, CHIP 47k 5% 1/10W
R410	1-216-025-91	s	METAL, CHIP 100 5% 1/10W
R411	1-216-089-91	s	METAL, CHIP 47k 5% 1/10W
R412	1-216-025-91	s	METAL, CHIP 100 5% 1/10W
R413	1-216-073-00	s	METAL, CHIP 10k 5% 1/10W
R414	1-216-073-00	s	METAL, CHIP 10k 5% 1/10W
R415	1-216-022-00	s	METAL, CHIP 75 5% 1/10W
R416	1-216-022-00	s	METAL, CHIP 75 5% 1/10W
RB101	1-239-308-11	s	RESISTOR BLOCK, CHIP 47k x 8
RB102	1-239-308-11	s	RESISTOR BLOCK, CHIP 47k x 8
RB202	1-239-308-11	s	RESISTOR BLOCK, CHIP 47k x 8
RB204	1-239-999-11	s	RESISTOR BLOCK, CHIP 1k x 4
RB301	1-239-389-11	s	RESISTOR BLOCK, CHIP 47k x 4
RB302	1-239-308-11	s	RESISTOR BLOCK, CHIP 47k x 8
RB303	1-239-998-11	s	RESISTOR BLOCK, CHIP 100 x 4
RB304	1-239-999-11	s	RESISTOR BLOCK, CHIP 1k x 4
RB305	1-239-999-11	s	RESISTOR BLOCK, CHIP 1k x 4
RB306	1-239-999-11	s	RESISTOR BLOCK, CHIP 1k x 4
RB307	1-239-999-11	s	RESISTOR BLOCK, CHIP 1k x 4
RB401	1-239-308-11	s	RESISTOR BLOCK, CHIP 47k x 8
RB402	1-239-308-11	s	RESISTOR BLOCK, CHIP 47k x 8
RB404	1-239-999-11	s	RESISTOR BLOCK, CHIP 1k x 4
RB405	1-239-999-11	s	RESISTOR BLOCK, CHIP 1k x 4
RB406	1-239-999-11	s	RESISTOR BLOCK, CHIP 1k x 4
RB407	1-239-999-11	s	RESISTOR BLOCK, CHIP 1k x 4
RB408	1-239-308-11	s	RESISTOR BLOCK, CHIP 47k x 8
RB410	1-236-908-11	s	RESISTOR BLOCK, CHIP 10k x 4
RB411	1-236-908-11	s	RESISTOR BLOCK, CHIP 10k x 4
RB412	1-239-999-11	s	RESISTOR BLOCK, CHIP 1k x 4
RB413	1-239-999-11	s	RESISTOR BLOCK, CHIP 1k x 4
RB414	1-239-999-11	s	RESISTOR BLOCK, CHIP 1k x 4
RB415	1-239-999-11	s	RESISTOR BLOCK, CHIP 1k x 4
S101	1-572-473-11	s	SWITCH, PUSH
S201	1-692-535-11	s	SWITCH, DIP, CHIP 4-CKT
X101	1-767-559-11	s	CRYSTAL, CHIP 19.6608MHz
X301	1-579-996-21	s	VIBRATOR, CERAMIC 20.0MHz

TC-90 BOARD(DSBK-130/130P)

Ref. No. or Q'ty	Part No.	SP	Description
1pc	4-812-134-11	s	RIVET (DIA. 3.5), NYLON
2pcs	7-621-759-45	s	+PSW, 2.6x6
C100	1-124-584-00	s	ELECT 100uF 20% 10V
C101	1-124-584-00	s	ELECT 100uF 20% 10V
C102	1-163-037-11	s	CERAMIC, CHIP 0.022uF 10% 25V
C103	1-163-037-11	s	CERAMIC, CHIP 0.022uF 10% 25V
C104	1-124-261-00	s	ELECT 10uF 20% 50V
C105	1-124-261-00	s	ELECT 10uF 20% 50V
C106	1-128-499-11	s	ELECT 220uF 20% 16V
C107	1-124-584-00	s	ELECT 100uF 20% 10V
C108	1-163-275-11	s	CERAMIC, CHIP 0.001uF 5% 50V
C109	1-163-037-11	s	CERAMIC, CHIP 0.022uF 10% 25V
C110	1-163-021-91	s	CERAMIC, CHIP 0.01uF 10% 50V
C111	1-163-251-11	s	CERAMIC, CHIP 100pF 5% 50V
C112	1-163-037-11	s	CERAMIC, CHIP 0.022uF 10% 25V
C113	1-163-235-11	s	CERAMIC, CHIP 22pF 5% 50V
C114	1-163-235-11	s	CERAMIC, CHIP 22pF 5% 50V
C115	1-163-133-00	s	CERAMIC, CHIP 470pF 5% 50V
C116	1-163-037-11	s	CERAMIC, CHIP 0.022uF 10% 25V
C117	1-163-037-11	s	CERAMIC, CHIP 0.022uF 10% 25V
C118	1-163-037-11	s	CERAMIC, CHIP 0.022uF 10% 25V
C119	1-163-037-11	s	CERAMIC, CHIP 0.022uF 10% 25V
C120	1-163-037-11	s	CERAMIC, CHIP 0.022uF 10% 25V
C121	1-163-037-11	s	CERAMIC, CHIP 0.022uF 10% 25V
C122	1-163-037-11	s	CERAMIC, CHIP 0.022uF 10% 25V
C123	1-163-037-11	s	CERAMIC, CHIP 0.022uF 10% 25V
C124	1-163-037-11	s	CERAMIC, CHIP 0.022uF 10% 25V
CN1	1-778-888-11	o	CONNECTOR, BB 34P, MALE
D100	8-719-941-23	s	DIODE DA204U
D101	8-719-941-23	s	DIODE DA204U
D102	8-719-941-23	s	DIODE DA204U
D103	8-719-941-23	s	DIODE DA204U
D104	8-719-941-23	s	DIODE DA204U
D105	8-719-941-23	s	DIODE DA204U
IC100	8-759-031-84	s	IC SC7S04F
IC101	8-759-100-96	s	IC UPC4558G2
IC102	8-759-186-38	s	IC TC74VHC32F(EL)
IC103	8-759-369-73	s	IC NJM4556AM
IC104	8-759-186-77	s	IC TC74VHC541F
IC105	8-759-700-07	s	IC NJM2903M
IC106	8-759-175-77	s	IC CXD8384Q
IC107	8-759-186-57	s	IC TC74VHC175F
Q100	8-729-028-91	s	TRANSISTOR DTA144EUA-T106
Q101	8-729-028-91	s	TRANSISTOR DTA144EUA-T106
Q102	8-729-422-44	s	TRANSISTOR 2SK663
Q103	8-729-422-44	s	TRANSISTOR 2SK663
R100	1-216-663-11	s	METAL, CHIP 3.3k 0.5% 1/10W
R101	1-216-648-11	s	METAL, CHIP 750 0.5% 1/10W
R102	1-216-089-91	s	METAL, CHIP 47k 5% 1/10W
R103	1-216-691-11	s	METAL, CHIP 47k 0.5% 1/10W
R104	1-216-691-11	s	METAL, CHIP 47k 0.5% 1/10W
R105	1-216-073-00	s	METAL, CHIP 10k 5% 1/10W
R106	1-216-659-11	s	METAL, CHIP 2.2k 0.5% 1/10W
R107	1-216-659-11	s	METAL, CHIP 2.2k 0.5% 1/10W
R108	1-216-624-11	s	METAL, CHIP 75 0.5% 1/10W
R109	1-216-699-11	s	METAL, CHIP 100k 0.5% 1/10W

(TC-90 BOARD(DSBK-130/130P))

Ref. No. or Q'ty	Part No.	SP	Description
R110	1-216-081-00	s	METAL, CHIP 22k 5% 1/10W
R111	1-216-071-00	s	METAL, CHIP 8.2k 5% 1/10W
R112	1-216-081-00	s	METAL, CHIP 22k 5% 1/10W
R113	1-216-049-91	s	METAL, CHIP 1k 5% 1/10W
R114	1-216-061-00	s	METAL, CHIP 3.3k 5% 1/10W
R115	1-216-699-11	s	METAL, CHIP 100k 0.5% 1/10W
R116	1-216-121-91	s	METAL, CHIP 1M 5% 1/10W
R117	1-216-121-91	s	METAL, CHIP 1M 5% 1/10W
R118	1-216-097-91	s	METAL, CHIP 100k 5% 1/10W
R119	1-216-049-91	s	METAL, CHIP 1k 5% 1/10W
R120	1-216-121-91	s	METAL, CHIP 1M 5% 1/10W
R121	1-216-121-91	s	METAL, CHIP 1M 5% 1/10W
R122	1-216-065-91	s	METAL, CHIP 4.7k 5% 1/10W
R123	1-216-097-91	s	METAL, CHIP 100k 5% 1/10W
R124	1-216-065-91	s	METAL, CHIP 4.7k 5% 1/10W
R125	1-216-065-91	s	METAL, CHIP 4.7k 5% 1/10W
R126	1-216-067-00	s	METAL, CHIP 5.6k 5% 1/10W
R127	1-216-065-91	s	METAL, CHIP 4.7k 5% 1/10W
R128	1-216-025-91	s	METAL, CHIP 100 5% 1/10W
R129	1-216-025-91	s	METAL, CHIP 100 5% 1/10W
R130	1-216-025-91	s	METAL, CHIP 100 5% 1/10W
R131	1-216-089-91	s	METAL, CHIP 47k 5% 1/10W
R132	1-216-025-91	s	METAL, CHIP 100 5% 1/10W
R133	1-216-089-91	s	METAL, CHIP 47k 5% 1/10W
R134	1-216-121-91	s	METAL, CHIP 1M 5% 1/10W
R135	1-216-037-00	s	METAL, CHIP 330 5% 1/10W
R136	1-216-295-91	s	RES, CHIP 0
R137	1-216-295-91	s	RES, CHIP 0
R138	1-216-049-91	s	METAL, CHIP 1k 5% 1/10W
R139	1-216-295-91	s	RES, CHIP 0
R140	1-216-295-91	s	RES, CHIP 0
R141	1-216-089-91	s	METAL, CHIP 47k 5% 1/10W
R142	1-216-089-91	s	METAL, CHIP 47k 5% 1/10W
R143	1-216-089-91	s	METAL, CHIP 47k 5% 1/10W
R144	1-216-089-91	s	METAL, CHIP 47k 5% 1/10W
R145	1-216-089-91	s	METAL, CHIP 47k 5% 1/10W
R146	1-216-089-91	s	METAL, CHIP 47k 5% 1/10W
R147	1-216-089-91	s	METAL, CHIP 47k 5% 1/10W
X100	1-579-993-21	s	CRYSTAL 13.5MHz

TR-93 BOARD

Ref. No. or Q'ty	Part No.	SP	Description
1pc	3-182-257-02	s	HOLDER, DME
CN31	1-566-759-11	o	CONNECTOR 4P, MALE
DM230	8-745-001-07	s	DME DM-230-1

FRAME(DSR-80/80P)

Ref. No. or Q'ty		Part No.	SP	Description	
1pc		1-241-577-11	s	RES, VAR, CARBON 20k/20k	
2pcs		1-454-337-21	s	SOLENOID	
2pcs		1-454-787-12	s	SOLENOID	
1pc	⚠	1-468-214-12	s	REGULATOR, SWITCHING	[for NTSC]
1pc	⚠	1-468-214-22	s	REGULATOR, SWITCHING	[for PAL]
1pc		1-500-051-11	s	BEAD, FERRITE (DETOUCHABLE)	
1pc		1-507-743-21	s	JACK, MINI STEREO	
1pc		1-698-785-21	s	MOTOR, FAN, DC	
2pcs		1-698-847-12	s	MOTOR, DC (REEL)	
1pc		1-698-881-11	s	MOTOR, DC (CAPSTAN)	
1pc		1-750-881-11	s	ADAPTOR, BNC-MINI COAX	
1pc		1-762-551-11	s	SWITCH, PUSH	
1pc		1-801-573-12	s	SENSOR, CONDENSATION	
1pc		1-777-529-31	s	CABLE COAXIAL-MINI 600mm (CN100/SDI-26 board to QSDI IN/rear panel)	
1pc		1-777-529-41	s	CABLE COAXIAL-MINI 600mm (CN500/SDI-26 board to QSDI OUT/rear panel)	
1pc		1-777-531-12	s	WIRE, FLEXIBLE CARD 11P (CN724/FP-75 board to CN714/KY-336 board)	
2pcs		1-777-532-11	s	WIRE, FLEXIBLE CARD 36P (CN203/MS-43 board to CN503/MB-712 board) (CN206/MS-43 board to CN506/MB-712 board)	
1pc		1-777-533-11	s	WIRE, FLEXIBLE CARD 13P (CN50/CC-75 board to CN505/MB-712 board)	
1pc		1-777-534-11	s	WIRE, FLEXIBLE CARD 9P (CN204/MS-43 board to CN11/RM-159 board)	
1pc		1-777-537-11	s	WIRE, FLEXIBLE CARD 36P (CN712/KY-336B board to CN702/MB-712 board)	
1pc		1-777-731-11	s	WIRE, FLEXIBLE CARD 9P (CN209/MS-43 board to CN15/RM-160 board)	
2pcs		1-782-419-11	s	WIRE, FLEXIBLE CARD 22P (CN2/PRE-34 board to CN801/MB-712 board) (CN3/PRE-34 board to CN802/MB-712 board)	

HARNESS, SUB (FG)
(CN12/RM-159 board to CN41/SE-315 board)
(CN16/RM-159 board to CN61/SE-315 board)
2pcs 1-956-616-11 o HARNESS, SUB (FG)

HARNESS, SUB (THREADING)
(CN211/MS-43 board to CN21/PTC-88 board)
1pc 1-956-617-11 o HARNESS, SUB (THREADING)

HARNESS, SUB (HP-MB)
(CN731/HP-73 board to CN701/MB-712 board)
1pc 1-956-618-11 o HARNESS, SUB (HP-MB)

HARNESS, SUB (1TREG)
(CN24/PTC-86 board to CN31/TR-93 board)
1pc 1-956-620-11 o HARNESS, SUB (1TREG)

HARNESS, SUB (TH/UNTH)
(CN221/MS-43 board to CN220/PTC-84 board)
1pc 1-956-623-13 o HARNESS, SUB (TH/UNTH)

HARNESS, SUB (AC SW)
(CN903 and CN904/MB-712 board to CN4 and CN5/switching regulator)
1pc 1-956-621-11 s HARNESS, SUB (AC SW)
S1001 ⚠ 1-570-117-31 s SWITCH, ROCKER

FRAME(DSBK-120/120P)

Ref. No. or Q'ty	Part No.	SP	Description
2pcs	1-500-051-11	s	BEAD, FERRITE (DETOUCHABLE)
2pcs	1-750-881-11	s	ADAPTOR, BNC-MINI COAX
1pc	1-777-529-11	s	CABLE, COAXIAL (CN201/SDI-28 board to SDI IN/rear panel)
1pc	1-777-529-21	s	CABLE, COAXIAL (CN202/SDI-28 board to SDI IN/rear panel)
1pc	1-777-529-51	s	CABLE, MINI-COAX (CN101/SDI-27 board to SDI OUT/rear panel)
1pc	1-777-529-61	s	CABLE, MINI-COAX (CN102/SDI-27 board to SDI OUT/rear panel)

15-7. PACKING MATERIALS & SUPPLIED ACCESSORIES (DSR-80/80P)

SUPPLIED ACCESSORIES(DSR-80/80P)

Ref. No. or Q'ty	Part No.	SP	Description
1pc	⚠ 1-551-812-11	s	CORD, POWER 3P(for UC)
1pc	⚠ 1-557-161-11	s	CORD, POWER 2P(for J)
1pc	⚠ 1-782-929-11	s	CORD, POWER 3P(for CE)
1pc	3-704-355-01	o	SHEET (STANDARD), PROTECTION
1pc	3-860-358-02	s	MANUAL, INSTRUCTION (Japanese, for J)
1pc	3-860-358-13	s	MANUAL, INSTRUCTION (English, for UC,CE)
1pc	3-860-358-23	s	MANUAL, INSTRUCTION (French, for UC,CE)
1pc	3-860-358-33	s	MANUAL, INSTRUCTION (German, for CE)
1pc	3-860-358-43	s	MANUAL, INSTRUCTION (Italian, for CE)

SUPPLIED ACCESSORIES(DSBK-120/120P)

Ref. No. or Q'ty	Part No.	SP	Description
4pcs	7-621-759-45	s	+PSW, 2.6x6

SUPPLIED ACCESSORIES(DSBK-130/130P)

Ref. No. or Q'ty	Part No.	SP	Description
2pcs	7-621-759-45	s	+PSW, 2.6x6

15-8. OPTIONAL FIXTURES (DSR-80/80P)

Part No.	SP	Description
J-6080-029-A	o	SMALL DENTAL MIRROR
J-6082-373-A	o	DV TORQUE CASSETTE
J-6325-400-A	o	TORQUE DRIVER (3kg/cm)
J-6440-850-A	o	TAPE GUIDE ADJUSTMENT DRIVER
J-6442-570-A	o	REEL TABLE HEIGHT GAUGE
J-6442-470-A	o	REEL TABLE REFERENCE PLATE
J-6442-170-A	o	BREAK TORQUE GAUGE (CW)
J-6442-460-A	o	BREAK TORQUE GAUGE (CCW)
J-6442-620-A	o	EXTENSION BOARD, DJ-260
J-6443-360-A	o	D COVER
3-184-527-01	o	CLEANING CLOTH
7-651-000-10	o	GREASE, SGL-601 (NET 50g)
7-661-018-18	o	DIAMOND OIL NT-68
7-700-736-06	o	L SHAPED HEXAGON WRENCH (S=0.89mm)
7-700-751-01	o	NUTDRIVER (S=4.5mm)
8-967-999-02	o	ALIGNMENT TAPE, XH2-1AST
8-967-999-21	o	ALIGNMENT TAPE, XH5-1A (for NTSC)
8-967-999-25	o	ALIGNMENT TAPE, XH5-1AP (for PAL)
9-911-053-00	o	THICKNESS GAUGE
9-919-573-01	o	CLEANING LIQUID

このマニュアルに記載されている事柄の著作権は当社にあり，説明内容は機器購入者の使用を目的としています。
従って，当社の許可なしに無断で複写したり，説明内容(操作，保守等)と異なる目的で本マニュアルを使用することを禁止します。

The material contained in this manual consists of information that is the property of Sony Corporation and is intended solely for use by the purchasers of the equipment described in this manual.
Sony Corporation expressly prohibits the duplication of any portion of this manual or the use thereof for any purpose other than the operation or maintenance of the equipment described in this manual without the express written permission of Sony Corporation.

Le matériel contenu dans ce manuel consiste en informations qui sont la propriété de Sony Corporation et sont destinées exclusivement à l'usage des acquéreurs de l'équipement décrit dans ce manuel.
Sony Corporation interdit formellement la copie de quelque partie que ce soit de ce manuel ou son emploi pour tout autre but que des opérations ou entretiens de l'équipement à moins d'une permission écrite de Sony Corporation.

Das in dieser Anleitung enthaltene Material besteht aus informationen, die Eigentum der Sony Corporation sind, und ausschließlich zum Gebrauch durch den Käufer der in dieser Anleitung beschriebenen Ausrüstung bestimmt sind.
Die Sony Corporation untersagt ausdrücklich die Vervielfältigung jeglicher Teile dieser Anleitung oder den Gebrauch derselben für irgendeinen anderen Zweck als die Bedienung oder Wartung der in dieser Anleitung beschriebenen Ausrüstung ohne ausdrückliche schriftliche Erlaubnis der Sony Corporation.

SAFETY CHECK-OUT

After correcting the original service problem, perform the following safety checks before releasing the set to the customer :

Check the metal trim, "metallized" knobs, screws, and all other exposed metal parts for AC leakage. Check leakage as described below.

LEAKAGE TEST

The AC leakage from any exposed metal part to earth ground and from all exposed metal parts to any exposed metal part having a return to chassis, must not exceed 0.5 mA (500 microampers). Leakage current can be measured by any one of three methods.

1. A commercial leakage tester, such as the Simpson 229 or RCA WT-540A. Follow the manufacturers' instructions to use these instruments.
2. A battery-operated AC milliammeter. The Data Precision 245 digital multimeter is suitable for this job.
3. Measuring the voltage drop across a resistor by means of a VOM or battery-operated AC voltmeter. The "limit" indication is 0.75 V, so analog meters must have an accurate low-voltage scale. The Simpson 250 and Sanwa SH-63Trd are examples of a passive VOM that is suitable. Nearly all battery operated digital multimeters that have a 2 V AC range are suitable. (See Fig. A)

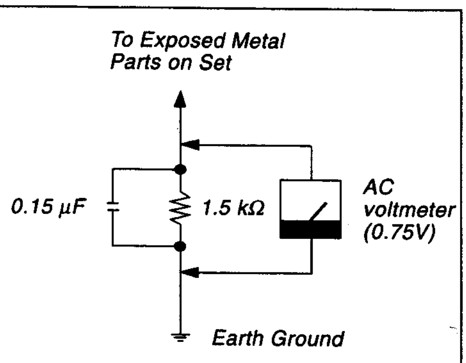

Fig A. Using an AC voltmeter to check AC leakage.

(UC model only)